F.A.I. RTE.	SECTION	COUNTY	TOTAL SHEETS	SHEET NO.
94	*	COOK	39	12
STA.		TO STA.		
FED. ROAD DIST. NO.	ILLINOIS	FED. AID PROJECT		

* (1516.1, 1717 & 1818) I-5

62934 (17G)

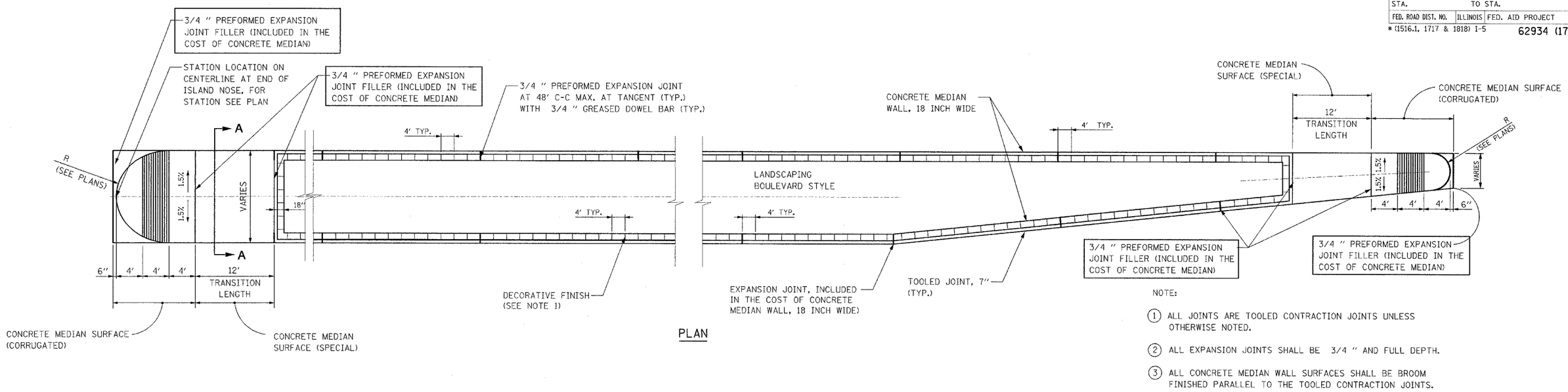

PLAN

NOTE:

1. ALL JOINTS ARE TOOLED CONTRACTION JOINTS UNLESS OTHERWISE NOTED.
2. ALL EXPANSION JOINTS SHALL BE 3/4 " AND FULL DEPTH.
3. ALL CONCRETE MEDIAN WALL SURFACES SHALL BE BROOM FINISHED PARALLEL TO THE TOOLED CONTRACTION JOINTS.

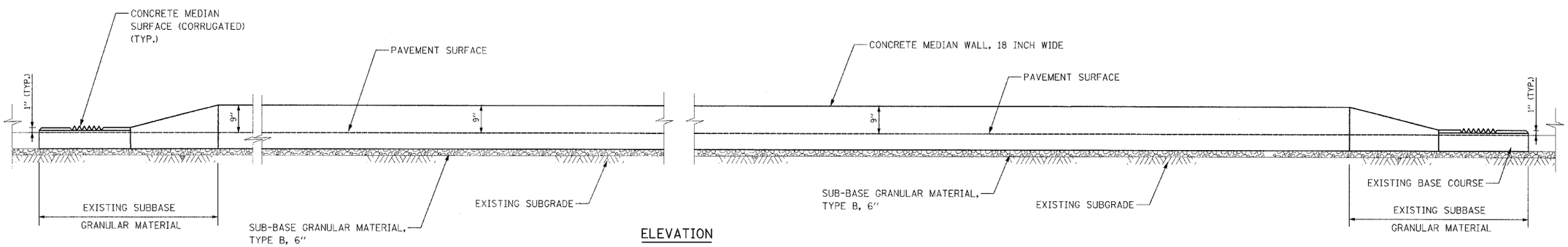

ELEVATION

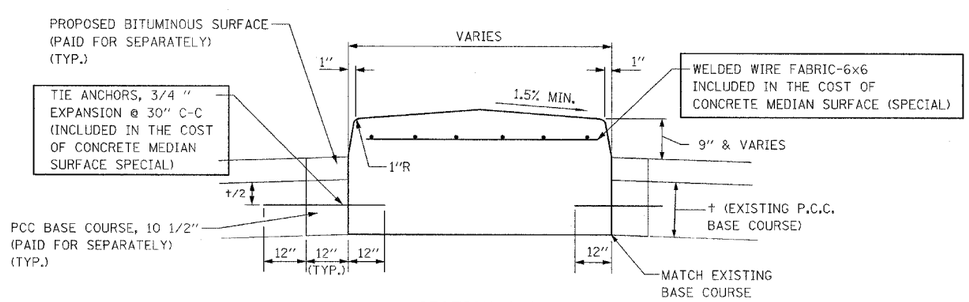

SECTION A-A

CONCRETE MEDIAN SURFACE (SPECIAL)

NOTES:

1. DECORATIVE FINISH SHALL CONSIST OF A STIFF BROOM FINISH ON ENTIRE SURFACE AND SCORING LINES AT SPACING SHOWN IN PLAN VIEW. SCORING LINES SHALL BE MADE WITH A FINISH GROOVER (MARSHALLTOWN PART NO. 836 OR CITY OF CHICAGO APPROVED EQUIVALENT).

FILE: L:\6592.02\Cad\Sheets\Contract 17g\659202 De102 17c.dgn

KNIGHT
Engineers & Architects

REVISIONS	
NAME	DATE
REVISED	05/06/05

ILLINOIS DEPARTMENT OF TRANSPORTATION

F.A.I. 94 (DAN RYAN EXPRESSWAY)

75TH AND 76TH STREET CONSTRUCTION DETAILS

SCALE: NONE | DRAWN BY: WHI

DATE: JULY 8, 2005 | CHECKED BY: JCM