F.A.I.	SECTION	COUNTY	TOTAL SHEETS	SHEET NO.
94/90	* 2003-028F	COOK	419	98
STA.		TO STA.		
FED. ROAD DIST. NO.	ILLINOIS	FED. AID PROJECT		

62580

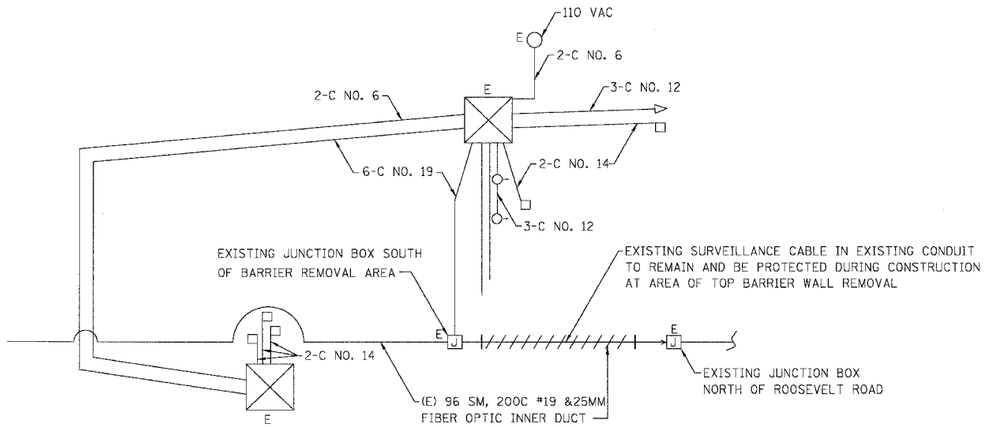

EXISTING SINGLE LINE DIAGRAM - MAINTAIN SURVEILLANCE CABLING SOUTH OF ROOSEVELT ROAD

NTS

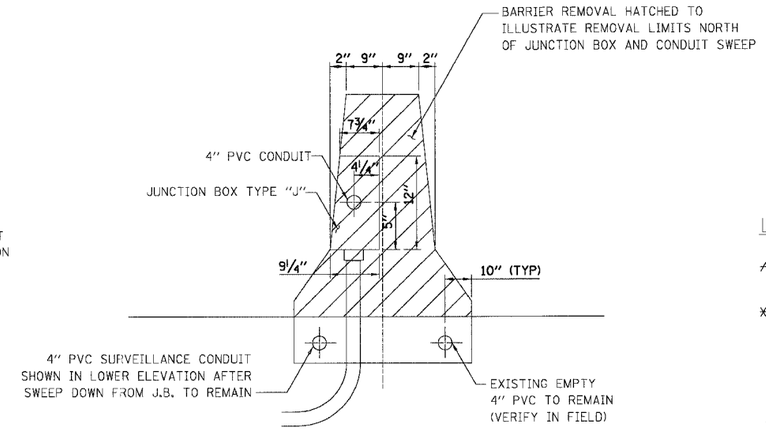

SECTION THRU TYPE IA BARRIER LOOKING SOUTH FOR SURVEILLANCE DUCTS

NTS

LEGEND

- EXISTING SURVEILLANCE CABLE TO REMAIN IN BARRIER REMOVAL AREA
- EXISTING CONDUIT AND CABLE EMBEDDED IN BARRIER TO BE REMOVED
- J — NEW JUNCTION BOX NEMA 3R MOUNTED TO BARRIER FOR TEMPORARY RE RE-REOUTE OF ALL CIRCUITS
- —E— NEW 3" RGSC IN SAW KERF WITH CABLING TO MATCH EXISTING
- E — EXISTING TWIN MAST FIXTURE TO REMAIN 310 WATT/400 WATT HPS
- R — EXISTING TWIN MAST POLE STANDARD MAST ARM, AND LUMINAIRE TO BE REMOVED FOR BARRIER DEMOLITION SEE "REMOVAL OF LIGHTING UNIT (SPECIAL)" ALL REMOVED POLES MAST ARMS, LUMINAIRES TO BE STORED PROTECTED FOR FUTURE RE-INSTALLATION AS DIRECTED BY IDOT

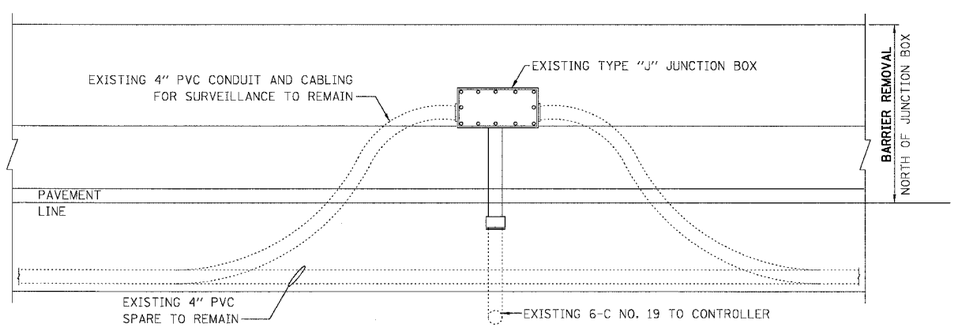

EXISTING SURVEILLANCE JUNCTION BOX ELEVATION REFERENCE

NTS

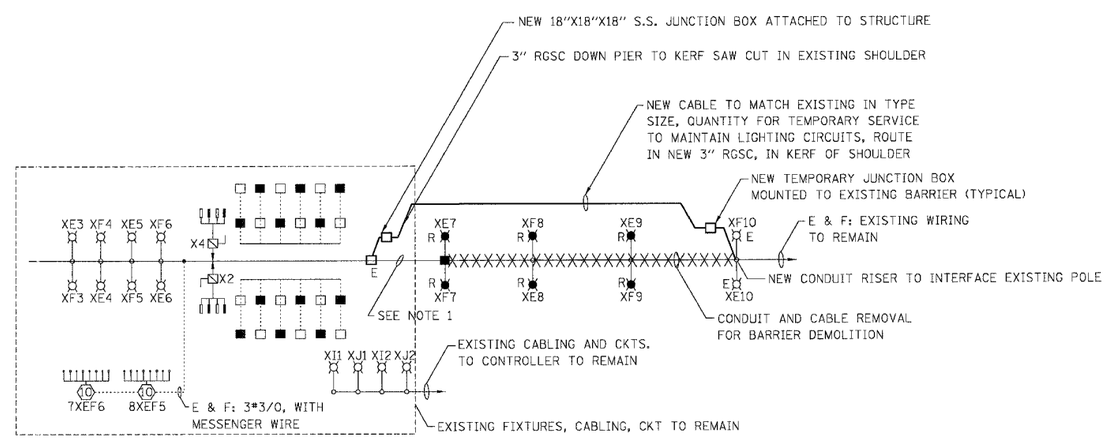

SINGLE LINE DIAGRAM - MAINTAINING EXISTING 31ST STREET NB ROADWAY LIGHTING CIRCUITS

NTS

NOTE: FIXTURE NUMBERS WERE TRANSCRIBED FROM 31ST TO 39TH STREET IMPROVEMENT ON 31ST STREET TO I-57 PROJECT (USED REFERENCE TO PLANS/DIAGRAMS)

NOTE 1

EXISTING CONDUIT AND CABLE EMBEDDED IN BARRIER REMOVED IN ANOTHER CONTRACT. THIS CONTRACT WILL EXTEND NEW CABLE FROM POLE XF10 AND XE10 IN 3" RGSC IN SAW KERF CUT INTO SHOULDER PAVEMENT AS TEMPORARY SERVICE FOR MOT. CABLE WILL EXTEND UP NORTH PIER OF 31ST STREET IN 3" RGSC ATTACHED TO STRUCTURE AND INTERFACE TO EXISTING LIGHTING SERVICES AT NEW 18"X18"X8" JUNCTION BOX ATTACHED TO STRUCTURE

CDT-01

REVISIONS	
NAME	DATE

ILLINOIS DEPARTMENT OF TRANSPORTATION

F.A.I. 94/90 (DAN RYAN EXPRESSWAY)
NB DAN RYAN ELEVATED BRIDGE
REPAIR FROM 15TH TO 28TH STREETS
CIVIL DETAILS

SCALE: =NTS DRAWN BY: RA
DATE: 7/22/2005 CHECKED BY: RS

BOWMAN, BARRETT & ASSOCIATES INC.
CONSULTING ENGINEERS
Chicago, Illinois
312.228.0100
www.bbandainc.com

n:\660\cadd\dwh\3\sheet\660_13cdt01.dgn 7/29/2005 9:46:02 AM