09-18-2026 LETTING ITEM 044

F.A.P. RTE.	SECTION	COUNTY	TOTAL SHEETS	SHEET NO.
326	((111)HB1,HVB1)ES	GRUNDY	137	1
	ILLINOIS	CONTRACT NO. 66M30		

D-93-097-25

STATE OF ILLINOIS
DEPARTMENT OF TRANSPORTATION

FOR INDEX OF SHEETS, SEE SHEET NO. 2
FOR IDOT HIGHWAY STANDARDS, SEE SHEET NO. 2

PROPOSED HIGHWAY PLANS

FAP ROUTE 326 (IL 47)
SECTION ((111)HB1,HVB1)BR-1
PROJECT NO. BR-BYEE(657)
BRIDGE REHABILITATION
GRUNDY COUNTY

C–93–139–25

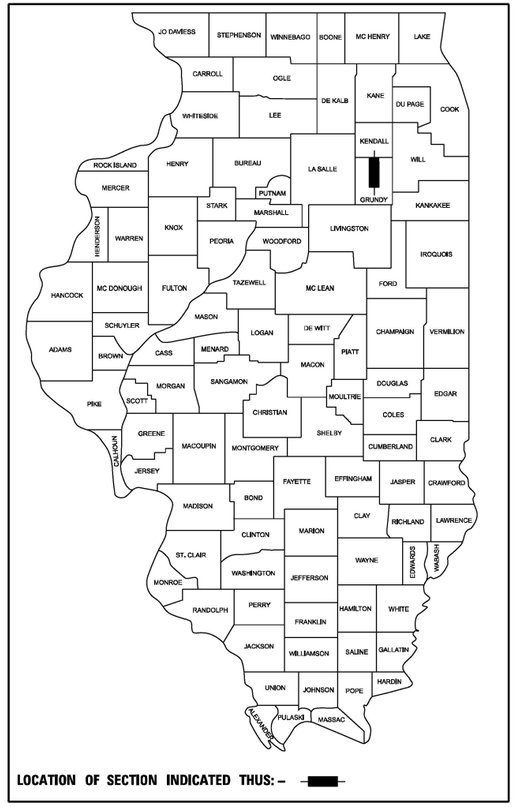

LOCATION OF SECTION INDICATED THUS: –

OATES ASSOCIATES

Collinsville
100 Lanter Court, Suite 1
Collinsville, IL 62234
618.345.2200

St. Louis
720 Olive, Suite 700
St. Louis, MO 63101
314.588.8381

Belleville
100 West Main Street, 2nd Floor
Belleville, IL 62220
618.416.4588

St. Charles
920 South Main, Suite 309
St. Charles, MO 63301
636.493.3277

www.oatesassodates.com
ILLINOIS DESIGN FIRM LICENSE NO.: 184.001115

BRIDGE STRUCTURE NO. 032–0087
STA. 38 + 36.25 TO
STA. 39 + 55.75

BRIDGE STRUCTURE NO. 032–0086
STA. 31 + 71.29 TO
STA. 35 + 65.52

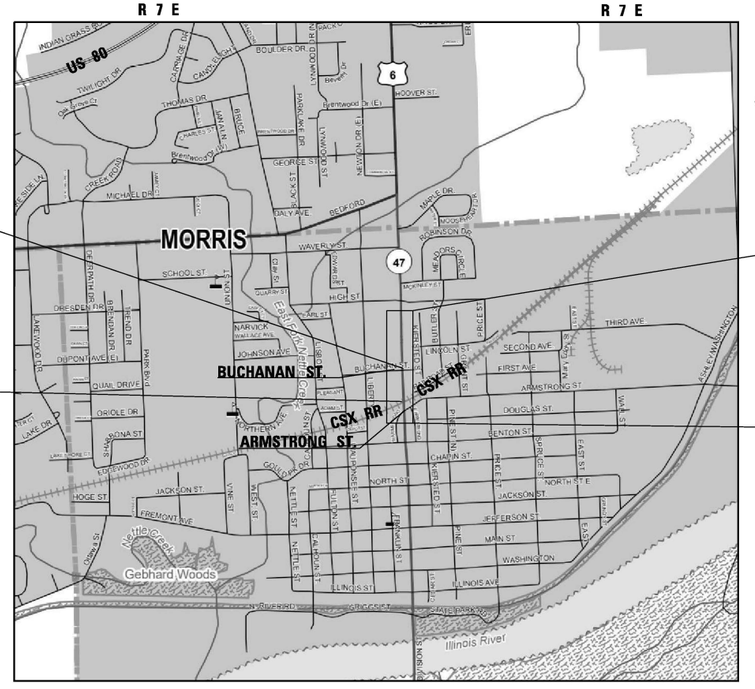

LOCATION MAP
(NOT TO SCALE)

END IMPROVEMENT
STA 43 + 00

BEGIN IMPROVEMENT
STA 30 + 43

TRAFFIC DATA

IL 47

ROADWAY CLASSIFICATION = OTHER PRINCIPAL ARTERIAL
POSTED SPEED = 35 MPH
CURRENT ADT = 21,700 (2025); 23,002 (2026)
SU = 2.9%, MU = 6.9%, PV = 90.2%

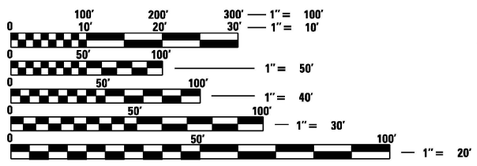

FULL SIZE PLANS HAVE BEEN PREPARED USING STANDARD ENGINEERING SCALES. REDUCED SIZED PLANS WILL NOT CONFORM TO STANDARD SCALES. IN MAKING MEASUREMENTS ON REDUCED PLANS, THE ABOVE SCALES MAY BE USED.

J.U.L.I.E.
JOINT UTILITY LOCATION INFORMATION FOR EXCAVATORS
1–800–892–0123
OR 811

PROJECT ENGINEER: DAVID S. ALEXANDER, P.E.
UNIT CHIEF: STEPHENIE CARMIN
DISTRICT 3 NO. (815) 434–6131

CONTRACT NO. 66M30

LOCATION MAP
(NOT TO SCALE)

GROSS LENGTH = 1257.00 FT. = 0.238 MILE
NET LENGTH = 1257.00 FT. = 0.238 MILE

BILL EDWARD TINDALL
062-059541
LICENSED PROFESSIONAL ENGINEER OF ILLINOIS

Bill Tindall, P.E. 06 /25 /2026

BILL TINDALL, P.E. Date
License Expires 11/30/2027
APPLIES TO SHEETS 1 THRU 40
AND 120 THRU 137.

STATE OF ILLINOIS
DEPARTMENT OF TRANSPORTATION

SUBMITTED June 26, 2026
Trisha Thompson
REGIONAL ENGINEER

August 14, 2026
cc
ENGINEER OF DESIGN AND ENVIRONMENT

August 14, 2026
DIRECTOR OF HIGHWAYS PROJECT IMPLEMENTATION

PRINTED BY THE AUTHORITY OF THE STATE OF ILLINOIS

REV. 7/8/26

INDEX OF SHEETS

1	COVER SHEET
2	GENERAL NOTES AND HIGHWAY STANDARDS
3-13	SUMMARY OF QUANTITIES
14-15	TYPICAL SECTIONS
16	SCHEDULE OF QUANTITIES
17-18	ALIGNMENT, TIES AND BENCHMARKS
19-20	REMOVAL SHEETS
21-23	PLAN AND PROFILE SHEETS
24-37	TRAFFIC CONTROL PLAN
38-39	PAVEMENT MARKING AND SIGNAGE SHEETS
40-41	EROSION CONTROL SHEETS
42-44	ROW PLANS
45-51	LIGHTING PLANS
52-120	BRIDGE PLANS
121-124	CONSTRUCTION DETAILS
125-137	CROSS SECTIONS

HIGHWAY STANDARDS

000001-09	STANDARD SYMBOLS, ABBREVIATIONS AND PATTERNS
001001-02	AREA OF REINFORCEMENT BARS
001006	DECIMAL OF AN INCH AND OF A FOOT
280001-07	TEMPORARY EROSION CONTROL SYSTEMS
420001-11	PAVEMENT JOINTS
420101-07	JOINTED PCC PAVEMENT
420401-13	PAVEMENT CONNECTOR (PCC) FOR BRIDGE APPROACH SLAB
420701-03	PAVEMENT WELDED WIRE REINFORCEMENT
442201-04	CLASS C AND D PATCHES
515001-04	NAME PLATES FOR BRIDGES
601101-02	CONCRETE HEADWALL FOR PIPE UNDERDRAINS
602301-04	INLET TYPE A
602401-07	PRECAST MANHOLE TYPE A 4' DIAMETER
602402-03	PRECAST MANHOLE TYPE A 5' DIAMETER
602701-02	MANHOLE STEPS
604001-05	FRAME AND LIDS TYPE 1
604006-05	FRAME AND GRATE TYPE 3
606001-09	CONCRETE CURB TYPE B AND COMBINATION CONCRETE CURB AND GUTTER
610001-09	SHOULDER INLET WITH CURB
630001-13	STEEL PLATE BEAM GUARDRAIL
630301-09	SHOULDER WIDENING FOR TYPE 1 (SPECIAL) GUARDRAIL TERMINALS
631031-18	TRAFFIC BARRIER TERMINAL TYPE 6
701001-02	OFF-RD OPERATIONS 2L, 2W, MORE THAN 15' AWAY
701006-05	OFF-RD OPERATIONS 2L, 2W, 15' TO 24' FROM PAVEMENT EDGE
701011-04	OFF-RD OPERATIONS 2L, 2W, 15' TO 24' FROM PAVEMENT EDGE
701101-05	OFF-RD OPERATIONS, MULTILANE, 15' TO 24' FROM PAVEMENT EDGE
701106-02	OFF-RD OPERATIONS, MULTILANE, MORE THAN 15' AWAY
701301-04	LANE CLOSURE, 2L, 2W, SHORT TIME OPERATIONS
701606-10	URBAN SINGLE LANE CLOSURE, MULTILANE, 2W WITH MOUNTABLE MEDIAN
701611-01	URBAN HALF ROAD CLOSURE, MULTILANE, 2W WITH MOUNTABLE MEDIAN
701801-06	SIDEWALK, CORNER OR CROSSWALK CLOSURE
701901-11	TRAFFIC CONTROL DEVICES
704001-08	TEMPORARY CONCRETE BARRIER
720001-01	SIGN PANEL MOUNTING DETAILS
720006-04	SIGN PANEL ERECTION DETAILS
725001-01	OBJECT AND TERMINAL MARKERS
780001-05	TYPICAL PAVEMENT MARKINGS
781001-04	TYPICAL APPLICATIONS RAISED REFLECTIVE PAVEMENT MARKERS
782006-01	GUARDRAIL AND BARRIER WALL REFLECTOR MOUNTING DETAILS
812001-01	RACEWAYS EMBEDDED IN STRUCTURE
814001-03	HANDHOLES
821001	UNDERPASS LIGHTING WALL MOUNT
821101-03	LUMINAIRE WIRING IN POLE
830026-01	TEMPORARY ROADWAY LIGHTING
836001-05	LIGHT POLE FOUNDATION
838001-01	BREAKAWAY DEVICES

GENERAL NOTES

1. THE HMA SURFACE OF ALL MAILBOX TURNOUTS, PRIVATE ENTRANCES, COMMERCIAL ENTRANCES, AND SIDE ROADS SHALL BE MADE NEATLY, IN A WORKMANLIKE MANNER, AND SHALL ACCURATELY CONFORM TO THE SHAPES AND DIMENSIONS SHOWN ON THE PLAN DETAILS. IF REQUIRED BY THE ENGINEER, THE CONTRACTOR SHALL SAW CUT THE HMA SURFACE TO CONFORM TO THE SHAPES AND DIMENSIONS SHOWN ON THE PLAN DETAILS. THIS WORK WILL BE INCLUDED IN THE COST OF THE HMA SURFACE.
2. EXCEPT AS NOTED ON THE PLANS, PAVEMENT GRADES SHOWN ARE AT THE TOP OF PAVEMENT SURFACES.
3. THE FINISHED EARTHWORK SHALL HAVE A VEGETATION SUSTAINING SOIL COVERING THE TOP FOUR INCHES IN AREAS TO BE SEEDED OR SODDED. THE VEGETATION SUSTAINING SOIL REQUIRED WILL NOT BE PAID FOR SEPARATELY BUT WILL BE INCLUDED IN THE COST OF FURNISHED EXCAVATION.
4. BEFORE ORDERING PIPE CULVERTS OR PIPE DRAINS, THE CONTRACTOR SHALL CONSULT THE ENGINEER FOR EXACT LENGTHS.
5. THE ENGINEER WILL BE THE SOLE JUDGE CONCERNING CURING TIME FOR THE VARIOUS HMA LIFTS.
6. ALL ELEVATIONS REFERRING TO U.S.G.S. MEAN SEA LEVEL DATUM.
7. THE FOLLOWING RATES OF APPLICATION HAVE BEEN USED IN CALCULATING PLAN QUANTITIES:

NUTRIENTS	90	LBS/ACRE
SEEDING	100	LBS/ACRE
HMA SURFACE COURSE	0.056	TONS / SQ YD / INCH

8. THE CONTRACTOR'S ATTENTION IS DIRECTED TO THE PRESENCE OF DEPARTMENT-OWNED UNDERGROUND ELECTRICAL CABLE WITHIN THE LIMITS OF THE PROPOSED IMPROVEMENT. THE CONTRACTOR SHALL REQUEST THE ILLINOIS DEPARTMENT OF TRANSPORTATION IN OTTAWA (815-434-8417) TO LOCATE THE UNDERGROUND FACILITIES, PROVIDING A MINIMUM OF 72 HOURS NOTICE. THE DEPARTMENT IS NOT A MEMBER OF THE JOINT UTILITY LOCATING INFORMATION FOR EXCAVATORS (JULIE) SYSTEM.
9. ALL DAMAGE TO DEPARTMENT OWNED UNDERGROUND FACILITIES, CAUSED BY THE CONTRACTOR SHALL BE REPAIRED TO THE SATISFACTION OF THE ENGINEER AND AT NO EXPENSE TO THE DEPARTMENT. THIS SHALL INCLUDE ALL TEMPORARY REPAIRS REQUIRED TO KEEP THE FACILITY OPERATIONAL WHILE MATERIAL IS BEING OBTAINED TO MAKE PERMANENT REPAIRS. SPLICING OF ELECTRIC CABLE WILL NOT BE ALLOWED. ELECTRIC CABLE SHALL BE REPLACED FROM POLE TO POLE OR CONTROLLER.
10. MEMBERS OF JULIE KNOWN TO BE WITHIN THE LIMITS OF THE IMPROVEMENT ARE:

ATT DISTRIBUTION
COM-ED
COMCAST
MCI/VERIZON
MORRIS, CITY OF
NICOR

NON-MEMBERS OF JULIE KNOWN TO BE WITHIN THE LIMITS OF THE IMPROVEMENT ARE:
ILLINOIS DEPARTMENT OF TRANSPORTATION (IDOT)

RAILROAD GENERAL NOTES

1. Refer to the CSX Transportation Public Project Information Manual for additional requirements needed for working on/above/adjacent to CSXT. Specific sections that pertain to this project are: Special Provisions for Construction near CSXT Property, Overhead Bridge Criteria, Construction Submission Criteria, Soil and Water Management Policy, and Insurance Requirements for Public Projects.
2. Upon completion of construction, a full set of electronic as-built drawings, showing actual measured vertical and horizontal clearances, shall be furnished to CSX. The Resident Engineer shall coordinate directly with CSXT RR to collect this survey data, as specified.
3. Contractor access will be limited to the immediate project area only. The CSXT right-of-way outside the project area may not be used for contractor access to the project site and no temporary at-grade crossings will be allowed.
4. CSXT may require the Contractor to install filter fabric over the track(s) and ballast to prevent any construction debris from fouling the ballast. This will be determined during actual construction activities by CSXT or its Representative. Fabric will remain in place until all construction activities are complete. If required, this shall be paid for in accordance with Section 109.04 of the Standard Specifications for Road & Bridge Construction.
5. The Contractor will be required to install falsework/demo shield protection over CSX as shown in the plans. The falsework/demo shield protection will be installed prior to the deck being penetrated and will stay in place for the duration of the construction activities. The falsework/demo shield shall be designed and constructed in accordance with the more stringent requirements of CSXT's Construction Submission Criteria and Section 501.03 of the IDOT Standard Specifications for Road and Bridge Construction.
6. The Contractor may not use CSXT right-of-way for storage of materials or equipment during construction without prior CSXT approval. The CSXT right-of-way must remain clear for railroad use at all times. Equipment may not be positioned to block the railroad access road, track area or any part of the CSXT right-of-way without prior CSXT approval.
7. Temporary Construction Clearance - Ensure all falsework, bracing or forms have a minimum horizontal clearance of 12 feet measured perpendicular to the centerline of the nearest track, and a minimum vertical clearance of 23 feet, or existing, whichever is less, as measured from the top of rail profile.
8. Any form work for the substructure repairs that will reduce the existing horizontal clearance will need to be submitted for review and accepted prior to being installed.
9. The Contractor will be required to abide by the provisions of the Agency/CSXT Construction Agreement. Periodically, throughout the project duration, the Contractor will be required to meet, discuss and, if necessary, take immediate action at the discretion of CSXT personnel and/or their authorized Representative, to comply with provisions of that agreement and these specifications
10. Upon completion of the work on CSXT property, the Contractor shall request the Owner to arrange a final inspection of the project with the Railroad's Project Engineer or his authorized Representative.
11. CSXT shall be notified at least 5 days in advance of the Pre-Construction Meeting.
12. CSXT has sole authority to determine the need for track protection required to protect its operations and property. In general, track protection will be required whenever Contractor or equipment are, or are likely to be, working within fifty feet of track or other track clearances as specified by CSX. If required, this shall be paid for in accordance with Section 109.04 of the Standard Specifications for Road & Bridge Construction.
13. All waste materials generated by this project, including but not limited to washing with water, cleaning solvents, blasting, scraping, brushing and painting operations, shall be the responsibility of the Project Sponsor or its Contractor and shall be contained, collected and properly disposed of by the Project Sponsor or its Contractor. The Project Sponsor and its Contractor agree to fully comply with all federal, state, and local environmental laws, regulations, statutes and ordinances at all times.
14. This note removed as its scope does not apply.
15. Debris from the deck removal in the spans adjacent to the railroad right of way shall be prevented from reaching the railroad right of way. No debris will be allowed to be left at track level at the end of the flagman's shift.

COMMITMENTS

TREE REMOVAL ACTIVITIES WILL BE LIMITED TO THE PERIOD BETWEEN OCTOBER 1ST AND MARCH 31ST.

HMA MIXTURE REQUIREMENT TABLE

LOCATIONS:	ENTIRE PROJECT
MIXTURE USE(S):	HMA
	SURFACE
BINDER GRADE (PG):	SBS PG 70-28
DESIGN AIR VOIDS:	4.0% @ N90
MIXTURE COMPOSITION:	IL 9.5
(MIXTURE GRADATION)	
FRICTION AGGREGATE:	MIXTURE E
MIXTURE WEIGHT:	112.0 LB/SY/IN
QUALITY MANAGEMENT PROGRAM:	QCQA
SUBLOT SIZE:	N/A
DENSITY TEST METHOD:	CORES/NUCLEAR
MATERIAL TRANSFER DEVICE (REQUIRED):	NO

STRUCTURAL DESIGN TRAFFIC: YEAR: 2036

PV = 22,602 SU = 753 MU = 1,731

ROAD/STREET CLASSIFICATION: CLASS: I

PERCENT OF STRUCTURAL DESIGN TRAFFIC IN DESIGN LANE:

P = 50.0% S = 50.0% M = 50.0%

TRAFFIC FACTOR: ACTUAL = 11.84

MIN = 5.02

STRUCTURAL SUPPORT RATING:

SSR = POOR

STATE OF ILLINOIS
DEPARTMENT OF TRANSPORTATION
DISTRICT THREE
AS BUILT INFORMATION

SUPERVISING CONSTRUCTION FIELD ENGINEER

RESIDENT ENGINEER / TECHNICIAN

START & END DATES OF CONSTRUCTION:

INSPECTORS:

MODEL: General Notes [Sheet]
FILE NAME: H:\P224055 - D3 V-V PTB 211-23\224055.001 - IL 47 over CSX RR and Buchanan CN 66M30\CADD\Microstation\CADD Drawings\D366M30-stit-genmote.dgn

OATES ASSOCIATES
www.oatesassociates.com
ILLINOIS DESIGN FIRM LICENSE NO.: 184.001115

USER NAME = kathryn.stark	DESIGNED -	REVISED -
	DRAWN -	REVISED -
	CHECKED -	REVISED -
PLOT DATE = 6/24/2026	DATE -	REVISED -

STATE OF ILLINOIS
DEPARTMENT OF TRANSPORTATION

GENERAL NOTES AND HIGHWAY STANDARDS

SCALE: | SHEET 1 OF 1 SHEETS | STA. | TO STA.

F.A.P RTE.	SECTION	COUNTY	TOTAL SHEETS	SHEET NO.
326	((111)HB1,HVB1)ES	GRUNDY	137	2
		CONTRACT NO. 66M30		
		ILLINOIS	FED. AID PROJECT	

CODE NO.	ITEM	UNIT	TOTAL QUANTITY	CONSTRUCTION CODE: BR-REP-REH IL 47 80% FED 20% STATE ROADWAY 0013 URBAN	IL 47 80% FED 20% STATE BRIDGE 0013 SN 032-0086	IL 47 80% FED 20% STATE BRIDGE 0013 SN 032-0087	100% CITY HIGHWAY LIGHTING 0021 MORRIS
20100110	TREE REMOVAL (6 TO 15 UNITS DIAMETER)	UNIT	94	94			
20100210	TREE REMOVAL (OVER 15 UNITS DIAMETER)	UNIT	38	38			
20200100	EARTH EXCAVATION	CU YD	305	305			
20400800	FURNISHED EXCAVATION	CU YD	460	460			
20800150	TRENCH BACKFILL	CU YD	155	155			
25000210	SEEDING, CLASS 2A	ACRE	1.25	1.25			
25000400	NITROGEN FERTILIZER NUTRIENT	POUND	113	113			
25000500	PHOSPHORUS FERTILIZER NUTRIENT	POUND	113	113			
25000600	POTASSIUM FERTILIZER NUTRIENT	POUND	113	113			
25100115	MULCH, METHOD 2	ACRE	1.25	1.25			
25100630	EROSION CONTROL BLANKET	SQ YD	5,247	5,247			
28000250	TEMPORARY EROSION CONTROL SEEDING	POUND	124	124			
28000400	PERIMETER EROSION BARRIER	FOOT	2,107	2,107			
28000500	INLET AND PIPE PROTECTION	EACH	13	13			

* SPECIALTY ITEM

MODEL: sht-SOQ-1 [Sheet]
FILE NAME: H:\P\2240055 - D3 V-V PTB 211-23\2240055.001 - IL 47 over CSX RR and Buchanan CN 66M30\CADD\Microstation\CADD Drawings\D366M30-sht-SOQ.dgn

OATES ASSOCIATES
www.oatesassociates.com
ILLINOIS DESIGN FIRM LICENSE NO.: 184.001115

USER NAME = kevin.botterbush | PLOT DATE = 6/22/2026

DESIGNED -	REVISED -	
DRAWN -	REVISED -	
CHECKED -	REVISED -	
DATE -	REVISED -	

STATE OF ILLINOIS
DEPARTMENT OF TRANSPORTATION

SUMMARY OF QUANTITIES

SCALE: | SHEET 1 OF 11 SHEETS | STA. | TO STA.

F.A.P RTE.	SECTION	COUNTY	TOTAL SHEETS	SHEET NO.
326	((111)HB1,HVB1)ES	GRUNDY	137	3
		CONTRACT NO. 66M30		
	ILLINOIS FED. AID PROJECT			

REV. 7/8/26

				CONSTRUCTION CODE			
				BR-REP-REH			
CODE NO.	ITEM	UNIT	TOTAL QUANTITY	IL 47 80% FED 20% STATE ROADWAY	IL 47 80% FED 20% STATE BRIDGE	IL 47 80% FED 20% STATE BRIDGE	100% CITY HIGHWAY LIGHTING
				0013	0013	0013	0021
				URBAN	SN 032-0086	SN 032-0087	MORRIS
30300112	AGGREGATE SUBGRADE IMPROVEMENT 12"	SQ YD	1,578	1,578			
31101200	SUBBASE GRANULAR MATERIAL, TYPE B 4"	SQ YD	1,233	1,233			
40600290	BITUMINOUS MATERIALS (TACK COAT)	POUND	860	860			
40604174	POLYMERIZED HOT-MIX ASPHALT SURFACE COURSE, IL-9.5, MIX "E", N90	TON	160	160			
42000060	WELDED WIRE REINFORCEMENT	SQ YD	459	459			
42000080	PAVEMENT CONNECTOR (PCC) FOR BRIDGE APPROACH SLAB	SQ YD	459	459			
42000506	PORTLAND CEMENT CONCRETE PAVEMENT 10 1/4" (JOINTED)	SQ YD	939	939			
42001300	PROTECTIVE COAT	SQ YD	1,398	1,398			
42400100	PORTLAND CEMENT CONCRETE SIDEWALK 4 INCH	SQ FT	7,899	7,899			
44000100	PAVEMENT REMOVAL	SQ YD	1,351	1,351			
44000500	COMBINATION CURB AND GUTTER REMOVAL	FOOT	1,490	1,490			
44000600	SIDEWALK REMOVAL	SQ FT	7,416	7,416			
44201759	CLASS D PATCHES, TYPE IV, 9 INCH	SQ YD	135	135			
50101700	REMOVAL OF EXISTING SUPERSTRUCTURES NO. 1	EACH	1		1		

* SPECIALTY ITEM

MODEL: sht-SOQ-2 [Sheet]
FILE NAME: H:\P2224055 - D3 V-V PTB 211-23\2224055.001 - IL 47 over CSX RR and Buchanan CN 66M30\CADD\Microstation\CADD Drawings\D366M30-sht-SOQ.dgn

OATES ASSOCIATES
www.oatesassociates.com
ILLINOIS DESIGN FIRM LICENSE NO.: 184.001115

USER NAME = kevin.botterbush	DESIGNED -	REVISED -
	DRAWN -	REVISED -
	CHECKED -	REVISED -
PLOT DATE = 6/22/2026	DATE -	REVISED -

STATE OF ILLINOIS
DEPARTMENT OF TRANSPORTATION

SUMMARY OF QUANTITIES

SCALE: | SHEET 2 OF 11 SHEETS | STA. | TO STA.

F.A.P RTE.	SECTION	COUNTY	TOTAL SHEETS	SHEET NO.
326	((111)HB1,HVB1)ES	GRUNDY	137	4
		CONTRACT NO. 66M30		
	ILLINOIS FED. AID PROJECT			

REV. 7/8/26

CODE NO.	ITEM	UNIT	TOTAL QUANTITY	CONSTRUCTION CODE: BR-REP-REH IL 47 80% FED 20% STATE ROADWAY 0013 URBAN	IL 47 80% FED 20% STATE BRIDGE 0013 SN 032-0086	IL 47 80% FED 20% STATE BRIDGE 0013 SN 032-0087	100% CITY HIGHWAY LIGHTING 0021 MORRIS
50101800	REMOVAL OF EXISTING SUPERSTRUCTURES NO. 2	EACH	1			1	
50102400	CONCRETE REMOVAL	CU YD	58.6		30.6	28.0	
50104650	SLOPE WALL REMOVAL	SQ YD	1,028		1,028		
50157300	PROTECTIVE SHIELD	SQ YD	1,674		1,323	351	
50200100	STRUCTURE EXCAVATION	CU YD	514		293	221	
50300225	CONCRETE STRUCTURES	CU YD	118.3		77.5	40.8	
50300255	CONCRETE SUPERSTRUCTURE	CU YD	1,395.1		1,038.8	356.3	
50300260	BRIDGE DECK GROOVING	SQ YD	3,521		2,524	997	
50300300	PROTECTIVE COAT	SQ YD	5,211		3,735	1,476	
50301350	CONCRETE SUPERSTRUCTURE (APPROACH SLAB)	CU YD	191.6			191.6	
50500105	FURNISHING AND ERECTING STRUCTURAL STEEL	L SUM	1		0.5	0.5	
50500505	STUD SHEAR CONNECTORS	EACH	37,269		29,619	7,650	
50800205	REINFORCEMENT BARS, EPOXY COATED	POUND	361,600		223,540	138,060	
50800515	BAR SPLICERS	EACH	2,091		1,413	678	

* SPECIALTY ITEM

MODEL: sht-SOQ-3 [Sheet]
FILE NAME: H:\P\2240055 - D3 V-V PTB 211-23\2240055.001 - IL 47 over CSX RR and Buchanan CN 66M30\CADD\Microstation\CADD Drawings\D366M30-sht-SOQ.dgn

OATES ASSOCIATES
www.oatesassociates.com
ILLINOIS DESIGN FIRM LICENSE NO.: 184.001115

USER NAME = kevin.botterbush	DESIGNED -	REVISED -
	DRAWN -	REVISED -
	CHECKED -	REVISED -
PLOT DATE = 6/22/2026	DATE -	REVISED -

STATE OF ILLINOIS
DEPARTMENT OF TRANSPORTATION

SUMMARY OF QUANTITIES

SCALE: | SHEET 3 OF 11 SHEETS | STA. | TO STA.

F.A.P RTE.	SECTION	COUNTY	TOTAL SHEETS	SHEET NO.
326	((111)HB1,HVB1)ES	GRUNDY	137	5
		CONTRACT NO. 66M30		
	ILLINOIS FED. AID PROJECT			

REV. 7/27/26 REV. 7/8/26

CODE NO.	ITEM	UNIT	TOTAL QUANTITY	CONSTRUCTION CODE: BR-REP-REH IL 47 80% FED 20% STATE ROADWAY 0013 URBAN	IL 47 80% FED 20% STATE BRIDGE 0013 SN 032-0086	IL 47 80% FED 20% STATE BRIDGE 0013 SN 032-0087	100% CITY HIGHWAY LIGHTING 0021 MORRIS
50901739	BRIDGE FENCE RAILING, CURVED	FOOT	1,144		847	297	
51100100	SLOPE WALL 4 INCH	SQ YD	994		994		
51500100	NAME PLATES	EACH	2		1	1	
52000110	PREFORMED J OINT STRIP SEAL	FOOT	143		143		
52100010	ELASTOMERIC BEARING ASSEMBLY, TYPE I	EACH	150		120	30	
52100510	ANCHOR BOLTS, 3/4"	EACH	40			40	
52100520	ANCHOR BOLTS, 1"	EACH	70		30	40	
52100530	ANCHOR BOLTS, 1 1/4"	EACH	40		40		
52200010	TEMPORARY SHEET PILING	SQ FT	532		286	246	
53212754	STRUCTURAL REPAIR OF CONCRETE (DEPTH EQUAL TO OR LESS THAN 5 INCHES)	SQ FT	37		21	16	
54210182	PIPE ELBOW, 12"	EACH	8	8			
550A0340	STORM SEWERS, CLASS A, TYPE 2 12"	FOOT	546	546			
55100500	STORM SEWER REMOVAL 12"	FOOT	588	588			
58600101	GRANULAR BACKFILL FOR STRUCTURES	CU YD	471		269	202	

* SPECIALTY ITEM

MODEL: sht-SOQ-4 [Sheet]
FILE NAME: H:\P\2240S5 - D3 V-V PTB 211-23\2240S5.001 - IL 47 over CSX RR and Buchanan CN 66M30\CADD\Microstation\CADD Drawings\D366M30-sht-SOQ.dgn

OATES ASSOCIATES
www.oatesassociates.com
ILLINOIS DESIGN FIRM LICENSE NO.: 184.001115

USER NAME = kevin.botterbush
PLOT DATE = 5/20/2026

DESIGNED -
DRAWN -
CHECKED -
DATE -

REVISED -
REVISED -
REVISED -
REVISED -

STATE OF ILLINOIS
DEPARTMENT OF TRANSPORTATION

SUMMARY OF QUANTITIES

SCALE: | SHEET 4 OF 11 SHEETS | STA. | TO STA.

F.A.P RTE.	SECTION	COUNTY	TOTAL SHEETS	SHEET NO.
326	((111)HB1,HVB1)ES	GRUNDY	137	6
		CONTRACT NO. 66M30		
	ILLINOIS FED. AID PROJECT			

REV. 7/8/26

					CONSTRUCTION CODE			
					BR-REP-REH			
CODE NO.	ITEM	UNIT	TOTAL QUANTITY	IL 47 80% FED 20% STATE ROADWAY	IL 47 80% FED 20% STATE BRIDGE	IL 47 80% FED 20% STATE BRIDGE	100% CITY HIGHWAY LIGHTING
				0013	0013	0013	0021
				URBAN	SN 032-0086	SN 032-0087	MORRIS
59000200	EPOXY CRACK INJECTION	FOOT	349		298	51	
59100100	GEOCOMPOSITE WALL DRAIN	SQ YD	211		114	97	
60146304	PIPE UNDERDRAINS FOR STRUCTURES 4"	FOOT	347		179	168	
60218500	MANHOLES, TYPE A, 4'-DIAMETER, TYPE 3 FRAME AND GRATE	EACH	5	5			
60221100	MANHOLES, TYPE A, 5'-DIAMETER, TYPE 1 FRAME, CLOSED LID	EACH	4	4			
60235700	INLETS, TYPE A, TYPE 3 FRAME AND GRATE	EACH	5	5			
60255500	MANHOLES TO BE ADJUSTED	EACH	2	2			
60260100	INLETS TO BE ADJUSTED	EACH	1	1			
60500040	REMOVING MANHOLES	EACH	5	5			
60500060	REMOVING INLETS	EACH	5	5			
60605000	COMBINATION CONCRETE CURB AND GUTTER, TYPE B-6.24	FOOT	1,249	1,249			
61000050	CONCRETE THRUST BLOCKS	EACH	4	4			
* 63000001	STEEL PLATE BEAM GUARDRAIL, TYPE A, 6 FOOT POSTS	FOOT	337.5	337.5			
* 63100085	TRAFFIC BARRIER TERMINAL, TYPE 6	EACH	8	8			

* SPECIALTY ITEM

MODEL: sht-SOQ-5 [Sheet]
FILE NAME: H:\P2240055 - D3 V-V PTB 211-23\2240055.00 - IL 47 over CSX RR and Buchanan CN 66M30\CADD\Microstation\CADD Drawings\D366M30-sht-SOQ.dgn

OATES ASSOCIATES
www.oatesassociates.com
ILLINOIS DESIGN FIRM LICENSE NO.: 184.001115

USER NAME = kathryn.stark	DESIGNED -	REVISED -
	DRAWN -	REVISED -
	CHECKED -	REVISED -
PLOT DATE = 6/25/2026	DATE -	REVISED -

STATE OF ILLINOIS
DEPARTMENT OF TRANSPORTATION

SUMMARY OF QUANTITIES

SCALE: | SHEET 5 OF 11 SHEETS | STA. | TO STA.

F.A.P RTE.	SECTION	COUNTY	TOTAL SHEETS	SHEET NO.
326	((111)HB1,HVB1)ES	GRUNDY	137	7
		CONTRACT NO. 66M30		
	ILLINOIS FED. AID PROJECT			

REV. 7/27/26 REV. 7/8/26

	CODE NO.	ITEM	UNIT	TOTAL QUANTITY	CONSTRUCTION CODE: BR-REP-REH IL 47 80% FED 20% STATE ROADWAY 0013 URBAN	IL 47 80% FED 20% STATE BRIDGE 0013 SN 032-0086	IL 47 80% FED 20% STATE BRIDGE 0013 SN 032-0087	100% CITY HIGHWAY LIGHTING 0021 MORRIS
*	63100167	TRAFFIC BARRIER TERMINAL, TYPE 1 (SPECIAL) TANGENT	EACH	4	4			
*	66901001	REGULATED SUBSTANCES PRE-CONSTRUCTION PLAN	L SUM	1	1			
*	66901003	REGULATED SUBSTANCES FINAL CONSTRUCTION REPORT	L SUM	1	1			
*	66901006	REGULATED SUBSTANCES MONITORING	CAL DA	21	21			
	67000400	ENGINEER'S FIELD OFFICE, TYPE A	CAL MO	9	9			
	67100100	MOBILIZATION	L SUM	1	1			
	70102625	TRAFFIC CONTROL AND PROTECTION, STANDARD 701606	L SUM	1	1			
	70102634	TRAFFIC CONTROL AND PROTECTION, STANDARD 701611	L SUM	1	1			
	70102640	TRAFFIC CONTROL AND PROTECTION, STANDARD 701801	L SUM	1	1			
	70103815	TRAFFIC CONTROL SURVEILLANCE	CAL DA	25	25			
	70107025	CHANGEABLE MESSAGE SIGN	CAL DA	275	275			
	70300100	SHORT TERM PAVEMENT MARKING	FOOT	807	807			

* SPECIALTY ITEM

MODEL: sht-SOQ-6 [Sheet]
FILE NAME: H:\P224055 - D3 V-V PTB 211-23\224055.00 - IL 47 over CSX RR and Buchanan CN 66M30\CADD\Microstation\CADD Drawings\D366M30-sht-SOQ.dgn

OATES ASSOCIATES
www.oatesassociates.com
ILLINOIS DESIGN FIRM LICENSE NO.: 184.001115

USER NAME = kathryn.stark
PLOT DATE = 6/25/2026

DESIGNED -
DRAWN -
CHECKED -
DATE -

REVISED -
REVISED -
REVISED -
REVISED -

STATE OF ILLINOIS
DEPARTMENT OF TRANSPORTATION

SUMMARY OF QUANTITIES

SCALE: | SHEET 6 OF 11 SHEETS | STA. | TO STA.

F.A.P RTE.	SECTION	COUNTY	TOTAL SHEETS	SHEET NO.
326	((111)HB1,HVB1)ES	GRUNDY	137	8
		CONTRACT NO. 66M30		
	ILLINOIS FED. AID PROJECT			

REV. 8/5/26 REV. 7/27/26 REV. 7/8/26

					CONSTRUCTION CODE			
					BR-REP-REH			
CODE NO.	ITEM	UNIT	TOTAL QUANTITY		IL 47 80% FED 20% STATE ROADWAY	IL 47 80% FED 20% STATE BRIDGE	IL 47 80% FED 20% STATE BRIDGE	100% CITY HIGHWAY LIGHTING
					0013	0013	0013	0021
					URBAN	SN 032-0086	SN 032-0087	MORRIS
70300150	SHORT TERM PAVEMENT MARKING REMOVAL	SQ FT	266		266			
70301100	TEMPORARY PAVEMENT MARKING LETTERS AND SYMBOLS - EPOXY	SQ FT	32		32			
70301120	TEMPORARY PAVEMENT MARKING - LINE 4" - EPOXY	FOOT	12,828		12,828			
70301130	TEMPORARY PAVEMENT MARKING - LINE 6" - EPOXY	FOOT	953		953			
70301160	TEMPORARY PAVEMENT MARKING - LINE 12"- EPOXY	FOOT	680		680			
70400100	TEMPORARY CONCRETE BARRIER	FOOT	1,700		1,700			
70400125	PINNING TEMPORARY CONCRETE BARRIER	EACH	300		300			
70400200	RELOCATE TEMPORARY CONCRETE BARRIER	FOOT	1,500		1,500			
70600250	IMPACT ATTENUATORS, TEMPORARY (NON- REDIRECTIVE), TEST LEVEL 3	EACH	2		2			
70600350	IMPACT ATTENUATORS, RELOCATE (NON- REDIRECTIVE), TEST LEVEL 3	EACH	2		2			
72000100	SIGN PANEL - TYPE 1	SQ FT	34.0	*	34.0			
72400100	REMOVE SIGN PANEL ASSEMBLY - TYPE A	EACH	6	*	6			
72400710	RELOCATE SIGN PANEL - TYPE 1	SQ FT	7.5	*	7.5			
72501000	TERMINAL MARKER - DIRECT APPLIED	EACH	4	*	4			

* SPECIALTY ITEM

MODEL: Untitled-2 [Sheet]
FILE NAME: H:\P224055 - D3 V-V PTB 211-23\224055.001 - IL 47 over CSX RR and Buchanan CN 66M30\CADD\Microstation\CADD Drawings\D366M30-sht-SOQ.dgn

OATES ASSOCIATES
www.oatesassociates.com
ILLINOIS DESIGN FIRM LICENSE NO.: 184.001115

USER NAME = ryne.wirtjes	DESIGNED -	REVISED -
	DRAWN -	REVISED -
	CHECKED -	REVISED -
PLOT DATE = 5/21/2026	DATE -	REVISED -

STATE OF ILLINOIS
DEPARTMENT OF TRANSPORTATION

SUMMARY OF QUANTITIES

SCALE: | SHEET 7 OF 11 SHEETS | STA. | TO STA.

F.A.P RTE.	SECTION	COUNTY	TOTAL SHEETS	SHEET NO.
326	((111)HB1,HVB1)ES	GRUNDY	137	9
		CONTRACT NO. 66M30		
		ILLINOIS	FED. AID PROJECT	

REV. 7/27/26 REV. 7/8/26

	CODE NO.	ITEM	UNIT	TOTAL QUANTITY	CONSTRUCTION CODE: BR-REP-REH IL 47 80% FED 20% STATE ROADWAY 0013 URBAN	IL 47 80% FED 20% STATE BRIDGE 0013 SN 032-0086	IL 47 80% FED 20% STATE BRIDGE 0013 SN 032-0087	100% CITY HIGHWAY LIGHTING 0021 MORRIS
	73000100	WOOD SIGN SUPPORT	FOOT	90	90			
*	78004600	PREFORMED PLASTIC PAVEMENT MARKING, TYPE D - STANDARD - LETTERS AND SYMBOLS	SQ FT	32	32			
*	78004645	PREFORMED PLASTIC PAVEMENT MARKING, TYPE D - STANDARD - LINE 9"	FOOT	953	953			
*	78005110	EPOXY PAVEMENT MARKING - LINE 4"	FOOT	12,828	12,828			
*	78005150	EPOXY PAVEMENT MARKING - LINE 12"	FOOT	680	680			
*	78011000	GROOVING FOR RECESSED PAVEMENT MARKING, LETTERS AND SYMBOLS	SQ FT	32	32			
*	78011025	GROOVING FOR RECESSED PAVEMENT MARKING 5"	FOOT	2,058	2,058			
*	78011050	GROOVING FOR RECESSED PAVEMENT MARKING 10"	FOOT	625	625			
*	78011065	GROOVING FOR RECESSED PAVEMENT MARKING 13"	FOOT	540	540			
*	78100100	RAISED REFLECTIVE PAVEMENT MARKER	EACH	98	98			
*	78200005	GUARDRAIL REFLECTORS, TYPE A	EACH	24	24			
*	78200011	BARRIER WALL REFLECTORS, TYPE C	EACH	21	21			
	78300200	RAISED REFLECTIVE PAVEMENT MARKER REMOVAL	EACH	56	56			
	78300202	PAVEMENT MARKING REMOVAL - WATER BLASTING	SQ FT	5,423	5,423			

* SPECIALTY ITEM

MODEL: Untitled-3 [Sheet]
FILE NAME: H:\P\224055 - D3 V-V PTB 211-23\224055.00 - IL 47 over CSX RR and Buchanan CN 66M30\CADD\Microstation\CADD Drawings\D366M30-sht-SOQ.dgn

OATES ASSOCIATES
www.oatesassociates.com
ILLINOIS DESIGN FIRM LICENSE NO.: 184.001115

USER NAME = kevin.botterbush
PLOT DATE = 6/22/2026

DESIGNED	-	REVISED -
DRAWN	-	REVISED -
CHECKED	-	REVISED -
DATE	-	REVISED -

STATE OF ILLINOIS
DEPARTMENT OF TRANSPORTATION

SUMMARY OF QUANTITIES

SCALE: | SHEET 8 OF 11 SHEETS | STA. | TO STA.

F.A.P RTE.	SECTION	COUNTY	TOTAL SHEETS	SHEET NO.
326	((111)HB1,HVB1)ES	GRUNDY	137	10
		CONTRACT NO. 66M30		
	ILLINOIS FED. AID PROJECT			

REV. 7/27/26 REV. 7/8/26

					CONSTRUCTION CODE			
					BR-REP-REH			
	CODE NO.	ITEM	UNIT	TOTAL QUANTITY	IL 47 80% FED 20% STATE ROADWAY	IL 47 80% FED 20% STATE BRIDGE	IL 47 80% FED 20% STATE BRIDGE	100% CITY HIGHWAY LIGHTING
					0013	0013	0013	0021
					URBAN	SN 032-0086	SN 032-0087	MORRIS
*	81028730	UNDERGROUND CONDUIT, COILABLE NONMETALLIC CONDUIT, 1 1/4" DIA.	FOOT	1,360				1,360
*	81100300	CONDUIT ATTACHED TO STRUCTURE, 1" DIA., GALVANIZED STEEL	FOOT	500				500
*	81200215	CONDUIT EMBEDDED IN STRUCTURE, 1 1/4" DIA., PVC	FOOT	1,040				1,040
*	81300550	JUNCTION BOX, STAINLESS STEEL, ATTACHED TO STRUCTURE, 12" X 12" X 6"	EACH	16				16
*	81400100	HANDHOLE	EACH	4	4			
*	81702120	ELECTRIC CABLE IN CONDUIT, 600V (XLP-TYPE USE) 1/C NO. 8	FOOT	23,000				23,000
*	81800340	AERIAL CABLE, 3-1/C NO. 8 WITH MESSENGER WIRE	FOOT	440				440
*	82110007	LUMINAIRE, LED, ROADWAY, OUTPUT DESIGNATION G	EACH	12				12
*	82110019	LUMINAIRE, LED, UNDERPASS, WALLMOUNT, OUTPUT DESIGNATION A	EACH	8				8
*	83600300	LIGHT POLE FOUNDATION, 30" DIAMETER	FOOT	49				49
*	84200600	REMOVAL OF LIGHTING UNIT, NO SALVAGE	EACH	5				5
*	84500120	REMOVAL OF ELECTRIC SERVICE INSTALLATION	EACH	1				1
*	89502380	REMOVE EXISTING HANDHOLE	EACH	4	4			
*	X0327758	RELOCATE EXISTING CONDUIT AND CABLES	FOOT	1,120	1,120			

* SPECIALTY ITEM

MODEL: Untitled-5 [Sheet]
FILE NAME: H:\P224055 - D3 V-V PTB 211-23\224055.001 - IL 47 over CSX RR and Buchanan CN 66M30\CADD\Microstation\CADD Drawings\D366M30-snt-SOQ.dgn

OATES ASSOCIATES
www.oatesassociates.com
ILLINOIS DESIGN FIRM LICENSE NO.: 184.001115

USER NAME = kevin.botterbush	DESIGNED -	REVISED -
	DRAWN -	REVISED -
	CHECKED -	REVISED -
PLOT DATE = 8/19/2026	DATE -	REVISED -

STATE OF ILLINOIS
DEPARTMENT OF TRANSPORTATION

SUMMARY OF QUANTITIES

SCALE: | SHEET 9 OF 11 SHEETS | STA. | TO STA.

F.A.P RTE.	SECTION	COUNTY	TOTAL SHEETS	SHEET NO.
326	((111)HB1,HVB1)ES	GRUNDY	137	11
		CONTRACT NO. 66M30		
		ILLINOIS	FED. AID PROJECT	

REV. 7/27/26 REV. 7/8/26

CODE NO.	ITEM	UNIT	TOTAL QUANTITY	CONSTRUCTION CODE: BR-REP-REH IL 47 80% FED 20% STATE ROADWAY 0013 URBAN	IL 47 80% FED 20% STATE BRIDGE 0013 SN 032-0086	IL 47 80% FED 20% STATE BRIDGE 0013 SN 032-0087	100% CITY HIGHWAY LIGHTING 0021 MORRIS
X2020502	BRACED EXCAVATION	CU YD	14		14		
X4401198	HOT-MIX ASPHALT SURFACE REMOVAL, VARIABLE DEPTH	SQ YD	1,911	1,911			
X4403300	CONCRETE MEDIAN REMOVAL	SQ FT	1,248	1,248			
X5030305	CONCRETE WEARING SURFACE, 5"	SQ YD	448		448		
X5040100	PRECAST BRIDGE APPROACH SLAB	SQ FT	4,036		4,036		
X5080530	BAR TERMINATORS	EACH	912		388	524	
X5110308	SLOPE WALL CRACK SEALING	FOOT	80			80	
X5230174	DRAINAGE SCUPPERS, DS-11	EACH	10		6	4	
X6015000	REMOVE CONCRETE HEADWALLS FOR PIPE DRAINS	EACH	6	6			
X6050188	PLUG PIPE PENETRATION	EACH	4	4			
X6350204	LINEAR DELINEATOR PANELS, 4 INCH	EACH	6	6			
X6350206	LINEAR DELINEATOR PANELS, 6 INCH	EACH	20	20			
X6670106	FURNISH PERMANENT SURVEY MARKERS	EACH	1	1			
X7010216	TRAFFIC CONTROL AND PROTECTION, (SPECIAL)	L SUM	1	1			

* SPECIALTY ITEM

MODEL: Untitled-6 [Sheet]
FILE NAME: H:\P2224055 - D3 V-V PTB 211-23\2224055.001 - IL 47 over CSX RR and Buchanan CN 66M30\CADD\Microstation\CADD Drawings\D366M30-smt-SOQ.dgn

OATES ASSOCIATES
www.oatesassociates.com
ILLINOIS DESIGN FIRM LICENSE NO.: 184.001115

USER NAME = kevin.botterbush	DESIGNED -	REVISED -
	DRAWN -	REVISED -
	CHECKED -	REVISED -
PLOT DATE = 5/19/2026	DATE -	REVISED -

STATE OF ILLINOIS
DEPARTMENT OF TRANSPORTATION

SUMMARY OF QUANTITIES

SCALE: | SHEET 10 OF 11 SHEETS | STA. | TO STA.

F.A.P RTE.	SECTION	COUNTY	TOTAL SHEETS	SHEET NO.
326	((111)HB1,HVB1)ES	GRUNDY	137	12
		CONTRACT NO. 66M30		
	ILLINOIS FED. AID PROJECT			

REV. 7/8/26

					CONSTRUCTION CODE			
					BR-REP-REH			
	CODE NO.	ITEM	UNIT	TOTAL QUANTITY	IL 47 80% FED 20% STATE ROADWAY	IL 47 80% FED 20% STATE BRIDGE	IL 47 80% FED 20% STATE BRIDGE	100% CITY HIGHWAY LIGHTING
					0013	0013	0013	0021
					URBAN	SN 032-0086	SN 032-0087	MORRIS
	X7200061	TEMPORARY INFORMATION SIGNING	SQ FT	42	42			
*	X8300001	LIGHT POLE (SPECIAL)	EACH	12				12
	X8410102	TEMPORARY LIGHTING SYSTEM	L SUM	1				1
*	X8420111	REMOVAL OF UNDERPASS LIGHTING UNIT, NO SALVAGE	EACH	1				1
	Z0004552	APPROACH SLAB REMOVAL	SQ YD	1109	1109			
	Z0013798	CONSTRUCTION LAYOUT	L SUM	1	0.4	0.3	0.3	
	Z0040530	PIPE UNDERDRAIN REMOVAL	FOOT	312	312			
	Z0048665	RAILROAD PROTECTIVE LIABILITY INSURANCE	L SUM	1	1			
*	X0326357	ROADWAY LIGHTING MODIFICATIONS	L SUM	1				1
Ø	Z0076600	TRAINEES	HOUR	2,000	2,000			
Ø	Z0076604	TRAINEES - TRAINING PROGRAM GRADUATE	HOUR	2,000	2,000			

* SPECIALTY ITEM
Ø 0042

MODEL: Untitled-7 [Sheet]
FILE NAME: H:\P224055 - D3 V-V PTB 211-230\224055.001 - IL 47 over CSX RR and Buchanan CN 66M30\CADD\Microstation\CADD Drawings\D366M30-snt-SOQ.dgn

OATES ASSOCIATES
www.oatesassociates.com
ILLINOIS DESIGN FIRM LICENSE NO.: 184.001115

USER NAME = kevin.botterbush	DESIGNED -	REVISED -
	DRAWN -	REVISED -
	CHECKED -	REVISED -
PLOT DATE = 8/18/2026	DATE -	REVISED -

STATE OF ILLINOIS
DEPARTMENT OF TRANSPORTATION

SUMMARY OF QUANTITIES

SCALE: | SHEET 11 OF 11 SHEETS | STA. | TO STA.

F.A.P RTE.	SECTION	COUNTY	TOTAL SHEETS	SHEET NO.
326	((111)HB1,HVB1)ES	GRUNDY	137	13
		CONTRACT NO. 66M30		
		ILLINOIS	FED. AID PROJECT	

REV. 8/10/26 REV. 7/27/26 REV. 7/8/26

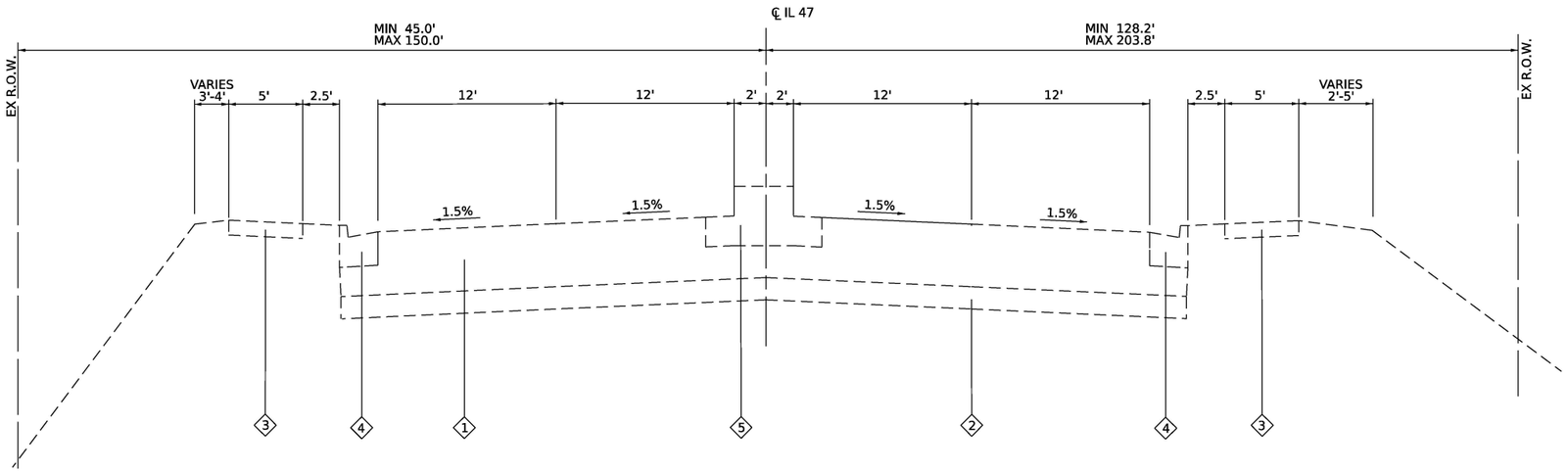

EXISTING IL 47

STA. 30+43.00 TO STA. 31+70.14
BRIDGE OMISSION STA. 31+70.14 TO STA. 35+66.54
STA. 35+66.54 TO STA. 38+35.25
BRIDGE OMISSION STA. 38+35.25 TO STA. 39+56.75
STA. 39+56.75 TO STA. 43+00.00

LEGEND

1. EXISTING HMA PAVEMENT ±17"
2. EXISTING SUB-BASE 6"
3. EXISTING SIDEWALK 4"
4. EXISTING COMBINATION CURB AND GUTTER, TYPE B-6.24
5. EXISTING CONCRETE MEDIAN, 9"
6. PROPOSED HOT-MIX ASPHALT SURFACE REMOVAL VARIABLE DEPTH
7. PROPOSED COMBINATION CURB AND GUTTER, TYPE B-6.24
8. PROPOSED AGGREGATE SUBGRADE IMPROVEMENT, 12"
9. PROPOSED PCC SIDEWALK 4"
10. PROPOSED PCC PAVEMENT 10 1/4" (JOINTED)
11. PROPOSED POLYMERIZED HOT-MIX ASPHALT SURFACE COURSE, IL-9.5, MIX "E", N90, 1.5"
12. CLASS D PATCHES, TYPE IV, 9IN
13. PROPOSED SUBBASE GRANULAR MATERIAL TYPE B 4"

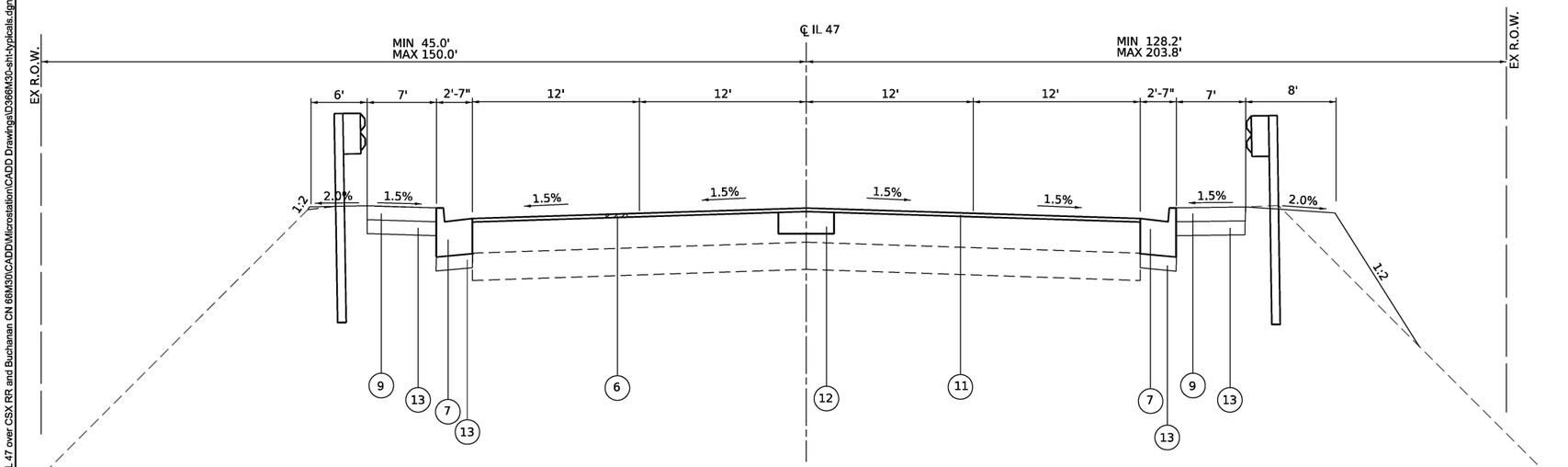

PROPOSED IL 47

STA. 30+43.00 TO STA. 31+10.39
STA. 40+06.00 TO STA. 40+80.00

NOTES:

1. PROPOSED LANE GRADE TRANSITION TO MATCH BRIDGE SLOPES AT
   STA. 31+00.00 TO STA. 31+25.00
   STA. 36+05.00 TO STA. 36+30.00
   STA. 37+75.00 TO STA. 38+00.00
   STA. 40+00.00 TO STA. 40+25.00
2. MEDIAN TRANSITION
   STA. 30+56.00 TO STA. 31+26.00
   STA. 40+80.00 TO STA. 41+50.00
3. PROPOSED LANE GRADE TRANSITION TO MATCH EXISTING SLOPES AT
   STA. 30+43.00 TO STA. 30+68.00
   STA. 42+25.00 TO STA. 43+00.00
4. PROPOSED GREENSPACE TRANSITION FROM 4.5' TO 2.5'
   STA. 40+80.00 TO STA. 41+50.00
5. PROPOSED GREENSPACE TRANSITION TO MATCH EXISTING WIDTH
   STA. 42+75.00 TO STA. 43+00.00
6. PROPOSED SIDEWALK SLOPE TRANSITION TO MATCH EXISTING
   STA. 30+43.00 TO STA. 30+68.00
   STA. 42+75.00 TO STA. 43+00.00
7. CLASS D PATCH PRESENT FROM STA. 40+00.75 TO STA. 40+80.00

MODEL: Untitled-2 [Sheet]
FILE NAME: H:\P224055 - D3 V-V PTB 211-23\224055.001 - IL 47 over CSX RR and Buchanan CN 66M30\CADD\Microstation\CADD Drawings\D3866M30-sht-typicals.dgn

OATES ASSOCIATES
www.oatesassociates.com
ILLINOIS DESIGN FIRM LICENSE NO.: 184.001115

USER NAME = ryne.wirtjes	DESIGNED -	REVISED -
	DRAWN -	REVISED -
	CHECKED -	REVISED -
PLOT DATE = 5/21/2026	DATE -	REVISED -

STATE OF ILLINOIS
DEPARTMENT OF TRANSPORTATION

TYPICAL SECTIONS

SCALE: | SHEET 1 OF 2 SHEETS | STA. | TO STA.

F.A.P RTE.	SECTION	COUNTY	TOTAL SHEETS	SHEET NO.
326	((111)HB1,HVB1)ES	GRUNDY	137	14
		CONTRACT NO. 66M30		
	ILLINOIS FED. AID PROJECT			

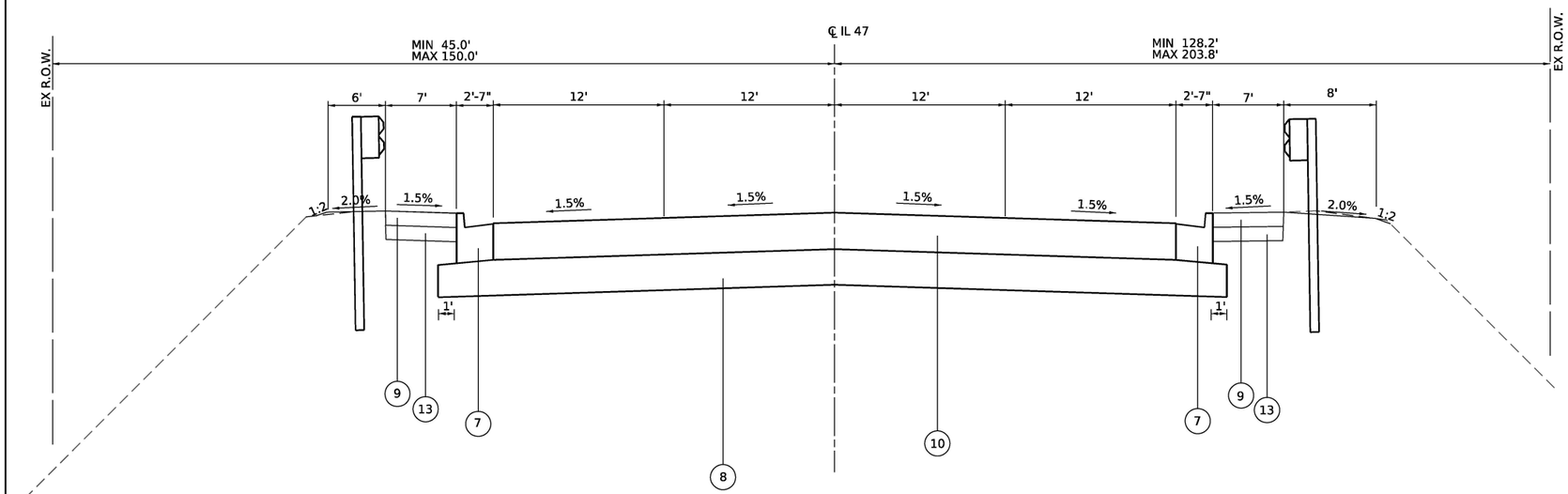

PROPOSED IL 47

PAVEMENT CONNECTOR STA. 31+10.39 TO STA. 31+41.29
BRIDGE APPROACH SLAB STA. 31+41.29 TO STA. 31+71.29
BRIDGE OMISSION STA. 31+71.29 TO STA. 35+65.52
BRIDGE APPROACH SLAB STA. 35+65.52 TO STA. 35+95.52
PAVEMENT CONNECTOR STA. 35+95.52 TO STA. 36+15.19
STA. 36+15.19 TO STA. 37+91.25
PAVEMENT CONNECTOR STA. 37+91.25 TO STA. 38+06.25
BRIDGE APPROACH SLAB STA. 38+06.25 TO STA. 38+36.25
BRIDGE OMISSION STA. 38+36.25 TO STA. 39+55.75
BRIDGE APPROACH SLAB STA. 39+55.75 TO STA. 39+85.75
PAVEMENT CONNECTOR STA. 39+85.75 TO STA. 40+06.00

LEGEND

1. EXISTING HMA PAVEMENT ±17"
2. EXISTING SUB-BASE 6"
3. EXISTING SIDEWALK 4"
4. EXISTING COMBINATION CURB AND GUTTER, TYPE B-6.24
5. EXISTING CONCRETE MEDIAN, 9"
6. PROPOSED HOT-MIX ASPHALT SURFACE REMOVAL VARIABLE DEPTH
7. PROPOSED COMBINATION CURB AND GUTTER, TYPE B-6.24
8. PROPOSED AGGREGATE SUBGRADE IMPROVEMENT, 12"
9. PROPOSED PCC SIDEWALK 4"
10. PROPOSED PCC PAVEMENT 10 1/4" (JOINTED)
11. PROPOSED POLYMERIZED HOT-MIX ASPHALT SURFACE COURSE, IL-9.5, MIX "E", N90, 1.5"
12. CLASS D PATCHES, TYPE IV, 9IN
13. PROPOSED SUBBASE GRANULAR MATERIAL TYPE B 4"

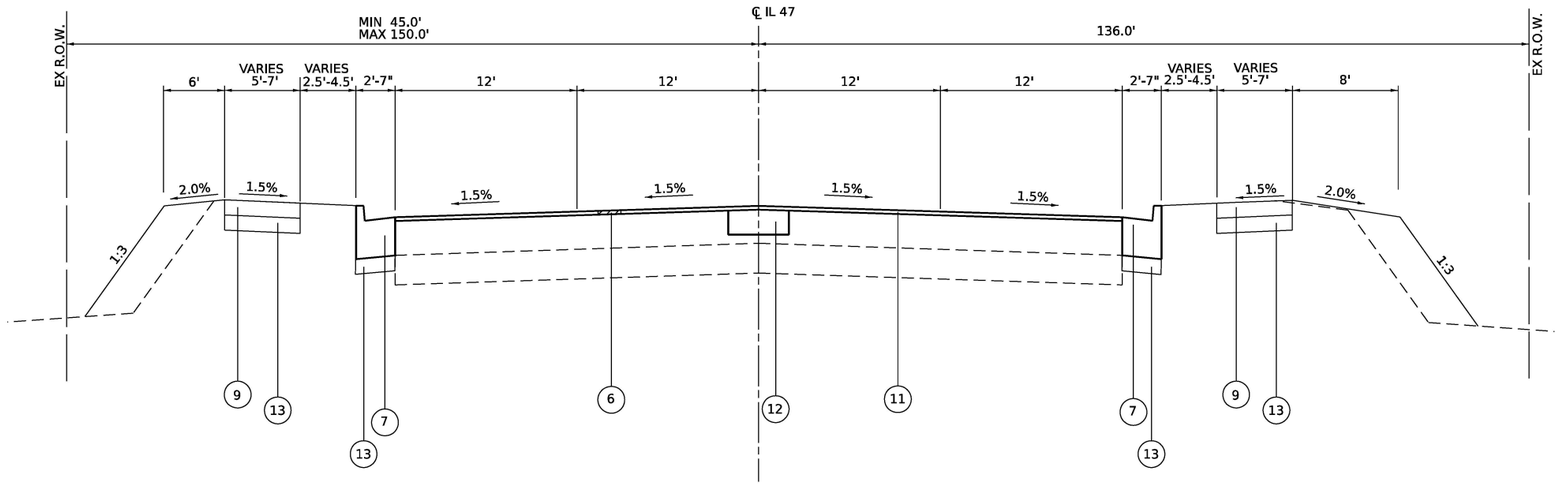

PROPOSED IL 47

STA. 40+80.00 TO STA. 43+00.00

NOTES:

1. PROPOSED LANE GRADE TRANSITION TO MATCH BRIDGE SLOPES AT
   STA. 31+00.00 TO STA. 31+25.00
   STA. 36+05.00 TO STA. 36+30.00
   STA. 37+75.00 TO STA. 38+00.00
   STA. 40+00.00 TO STA. 40+25.00
2. MEDIAN TRANSITION
   STA. 30+56.00 TO STA. 31+26.00
   STA. 40+80.00 TO STA. 41+50.00
3. PROPOSED LANE GRADE TRANSITION TO MATCH EXISTING SLOPES AT
   STA. 30+43.00 TO STA. 30+68.00
   STA. 42+25.00 TO STA. 43+00.00
4. PROPOSED GREENSPACE TRANSITION FROM 4.5' TO 2.5'
   STA. 40+80.00 TO STA. 41+50.00
5. PROPOSED GREENSPACE TRANSITION TO MATCH EXISTING WIDTH
   STA. 42+75.00 TO STA. 43+00.00
6. PROPOSED SIDEWALK SLOPE TRANSITION TO MATCH EXISTING
   STA. 30+43.00 TO STA. 30+68.00
   STA. 42+75.00 TO STA. 43+00.00
7. CLASS D PATCH PRESENT FROM STA. 40+00.75 TO STA. 40+80.00

MODEL: Untitled-3 [Sheet]
FILE NAME: H:\P224055 - D3 V-V PTB 211-23\224055.001 - IL 47 over CSX RR and Buchanan CN 66M30\CADD\Microstation\CADD Drawings\D366M30-sht-typicals.dgn

OATES ASSOCIATES
www.oatesassociates.com
ILLINOIS DESIGN FIRM LICENSE NO.: 184.001115

USER NAME = ryne.wirtjes	DESIGNED -	REVISED -
	DRAWN -	REVISED -
	CHECKED -	REVISED -
PLOT DATE = 5/21/2026	DATE -	REVISED -

STATE OF ILLINOIS
DEPARTMENT OF TRANSPORTATION

TYPICAL SECTIONS

SCALE: | SHEET 2 OF 2 SHEETS | STA. | TO STA.

F.A.P RTE.	SECTION	COUNTY	TOTAL SHEETS	SHEET NO.
326	((111)HB1,HVB1)ES	GRUNDY	137	15
		CONTRACT NO. 66M30		
		ILLINOIS	FED. AID PROJECT	

CURB & GUTTER SCHEDULE

STATION	STATION	OFFSET	SUB GRAN MAT B 4 (SQ YD)	COMB CURB GUTTER REM (FOOT)	COMB CC&G TY B-6.24 (FOOT)
30+43	31+87	LT/RT	56	258	197
30+43	38+37	LT/RT	121	542	422
35+61	38+37	LT/RT	180	690	630
TOTAL			357	1,490	1,249

EROSION CONTROL SCHEDULE

STATION	STATION	OFFSET	EROS CONTR BLANKET (SQ YD)	TEMP EROS CONTR SEED (POUND)	PERIMTER EROS BAR (FOOT)	INLET & PIPE PROTECT (EACH)
30+43	32+03	LT/RT	1,640	32	490	2
35+89	38+39	LT/RT	2,031	39	812	6
39+52	43+00	LT/RT	1,576	53	805	5
TOTAL			5,247	124	2,107	13

SEEDING SCHEDULE

STATION	STATION	OFFSET	SEEDING CL 2A (ACRE)	NITROGEN FERTILIZER NUTRIENT (POUND)	PHOSPORUS FERTILIZER NUTRIENT (POUND)	POTASSIUM FERTILIZER NUTRIENT (POUND)	MULCH METHOD 2 (ACRE)
30+43	32+03	LT/RT	0.32	29	29	29	0.32
35+89	38+39	LT/RT	0.39	36	36	36	0.39
39+52	43+00	LT/RT	0.53	48	48	48	0.53
SUBTOTAL			1.24	113	113	113	1.24
TOTAL			1.25	113	113	113	1.25

EARTHWORK SCHEDULE

STATION	STATION	EARTH EXCAVATION (CU YD)	EARTH EXCAVATION ADJUSTED FOR SHRINKAGE (NOTE 1) (CU YD)	EMBANKMENT (NOTE 2) (CU YD)	EARTHWORK BALANCE WASTE (+) OR SHORTAGE (-) (NOTE 3) (CU YD)	FURNISHED EXCAVATION (CU YD)
30+43	31+50	28	21	120	-99	99
36+00	38+00	206	154	55	99	
40+00	42+50	67	50	510	-459	360
SUBTOTAL		301	225	685	-459	459
TOTAL		305	225	685	-460	460

EARTHWORK NOTES:

1. ESTIMATED SHRINKAGE FACTOR = 25%.
2. APPROXIMATE EMBANKMENT QUANTITY IS SHOWN FOR INFORMATION ONLY.
3. APPROXIMATE EARTHWORK BALANCE IS SHOWN FOR INFORMATION ONLY.

PERMANENT SURVEY MARKER SCHEDULE

MONUMENT NUMBER	DESCRIPTION	APPROXIMATE LOCATION	EXISTING MONUMENT TYPE	PROPOSED MONUMENT TYPE	MONUMENT RECORD TO BE RECORDED	RESPONSIBILITY
047606	E QTR CORNER SECTION 4, T33N, R7E, 3RD PM	ON BRIDGE NB LANE	BRASS PLAQUE	TYPE 1	YES	1

NOTE: FOR BIDDING PURPOSES NO CONTRACTED LAND SURVEYING SERVICES WILL BE REQUIRED.

PLATS AND PLANS WILL PREPARE AND RECORD THE REQUIRED MONUMENT RECORD.

TRAFFIC CONTROL SHALL BE PROVIDED BY THE CONTRACTOR FOR THE ENGINEER TO INSTALL ALL MONUMENT TYPES.

RESPONSIBILITY:

1) RESIDENT TO COORDINATE WITH PLATS AND PLANS STAFF TO RE-ESTABLISH MONUMENT (PAY ITEM REQUIRED ACCORDING TO THE SPECIAL PROVISION "FURNISH PERMANENT SURVEY MARKER")
2) PLATS AND PLANS TO RE-ESTABLISH MONUMENT

SIDEWALK SCHEDULE

STATION	STATION	OFFSET	SUB GRAN MAT B 4 (SQ YD)	PC CONC SIDEWALK 4 (SQ FT)	SIDEWALK REM (SQ FT)
30+43	31+90	LT/RT	153	1,377	1,261
35+59	38+37	LT/RT	327	2,950	2,692
39+55	43+00	LT/RT	396	3,572	3,463
TOTAL			876	7,899	7,416

STAGING SCHEDULE

STATION	STATION	OFFSET	TEMP CONC BARRIER (FOOT)	PIN TEMP CONC BARRIER (EACH)	REL TEMP CONC BARRIER (FOOT)	IMP ATTN TEMP NRD TL3 (EACH)	IMP ATTN REL NRD TL3 (EACH)	BARR WALL REF TYPE C (EACH)	TEMP INFO SIGNING (SQ FT)
28+98	45+62	LT/RT	1,700	300	1,500	2	2	21	42
TOTAL			1,700	300	1,500	2	2	21	42

HANDHOLE SCHEDULE

STATION	STATION	OFFSET	HANDHOLE (EACH)	REMOV EX HANDHOLE (EACH)	REL EX CONDUIT CABLES (FOOT)
27+13	30+24	LT/RT			406
30+43	31+71	LT/RT	1	1	132
35+65	38+37	LT/RT	2	2	255
39+55	43+00	LT/RT	1	1	327
TOTAL			4	4	1,120

PAVEMENT MARKING SCHEDULE

STATION	STATION	OFFSET	SHORT TERM PVMT MKING (FOOT)	SHORT TERM PVMT MKING REM (SQ FT)	TEMP PVT MK L&S EPXY (SQFT)		TEMP PVT MK L 4 EPOXY (FOOT)		TEMP PVT MK L6 EPOXY (FOOT)		TEMP PVT MK L12 EPOXY (FOOT)		PREF PL PM TD STD L&S (SQFT)		PREF PL PM TD STD L9 (FOOT)		EPOXY PVT MK LINE 4 (FOOT)		EPOXY PVT MK LINE 12 (FOOT)		GRV RCSD PM LTR & SYM (SQ FT)	GRV RCSD PVT MRKG 5 (FOOT)	GRV RCSD PVT MRKG 10 (FOOT)	GRV RCSD PVT MRKG 13 (FOOT)	RAISED REFL PVMT MKR (EACH)	RAISED REFL PVMT MKR REM (EACH)	PVT MKG REM WTR BLAST (SQ FT)
					WHITE	YELLOW	WHITE	YELLOW	WHITE	YELLOW	WHITE	YELLOW	WHITE	YELLOW	WHITE	YELLOW	WHITE	YELLOW	WHITE	YELLOW							
27+96	30+43	LT/RT	80	26	32		230	1,688	77			100	32		77		230	1,688		100	32	537	77	100	8	6	805
30+43	43+00	LT/RT	571	189			5,036	3,118	628			280			628		5,036	3,118		280		832	300	140	64	34	3,285
43+00	49+41	LT/RT	156	51				2,756	248			300			248			2,756		300		689	248	300	26	16	1,333
TOTAL			807	266	32		12,828		953		680		32		953		12,828		680		32	2,058	625	540	98	56	5,423

PAVEMENT MARKING NOTES:

1. 2 COATS OF EPOXY REQUIRED PER SPECIAL PROVISION.
2. QUANTITY HAS BEEN DOUBLED TO REFLECT TWO COATS.

PAVEMENT SCHEDULE

STATION	STATION	OFFSET	AGG SUBGRADE IMPR 12 (SQ YD)	BIT MATLS TACK CT (POUND)	P HMA SC IL-9.5 E N90 (TON)	WELDED WIRE REINF (SQ YD)	PVT CON PCC BR APP SL (SQ YD)	PCC PVT 10 1/4 JOINTD (SQ YD)	PROTECTIVE COAT (SQ YD)	PAVEMENT REM (SQ YD)	CL D PATCH T4 9 (SQ YD)	HMA SURF REM VAR DP (SQ YD)	APPROACH SLAB REM (SQ YD)
30+43	31+10	LT/RT		177	33							394	
31+10	31+87	LT/RT	191			166	166		166	62			281
35+60	36+15	LT/RT	121			105	105		105				287
36+15	37+91	LT/RT	1,079					939	939	978			
37+86	38+06	LT/RT	95			80	80		80				271
39+55	40+01	LT/RT	92			108	108		108	263			270
40+06	43+00	LT/RT		683	127					48	135	1,517	
TOTAL			1,578	860	160	459	459	939	1,398	1,351	135	1,911	1,109

REMOVAL SCHEDULE

STATION	STATION	OFFSET	TREE REMOV 6-15 (UNIT)	TREE REMOV OVER 15 (UNIT)	CONC MEDIAN REMOV (SQ FT)	REM CONC HDWL P DRNS (EACH)	PLUG PIPE PENETRATION (EACH)	PIPE UNDERDRAIN REMOV (FOOT)
27+13	30+24	LT/RT						
30+24	31+71	LT/RT				2	1	102
35+65	38+37	LT/RT			667	2	2	106
39+55	43+00	LT/RT	94	38	581	2	1	104
TOTAL			94	38	1,248	6	4	312

SIGN SCHEDULE

STATION	OFFSET	TYPE	DESCRIPTION	SIZE (IN X IN)	SIGN PANEL T1 (SQ FT)	REM SIGN PAN ASSY TA (EACH)	RELOC SIGN PANEL T1 (SQFT)	WOOD SIGN SUPPORT (FOOT)
31+45	RT	1	R2-1 35 MPH SPEED LIMIT	30" X 36"	7.5	1		15
37+88	LT	1	W3-3 TRAFFIC LIGHT AHEAD	30" X 30"	6.3	1		15
41+51	LT	1	R14-1 TRUCK ROUTE	24" X 18"	3.0	1		
41+51	LT	1	M5-1L ADVANCE TURN	21" X 15"	2.2			15
41+60	RT	1	R2-1 35 MPH SPEED LIMIT	30" X 36"	7.5	1		15
42+06	LT	1	R2-1 35 MPH SPEED LIMIT	30" X 36"	7.5	1		15
42+96	LT	1	EXCESSIVE ENGINE BREAKING	30" X 36"		1	7.5	15
TOTAL					34.0	6	7.5	90

GUARDRAIL SCHEDULE

STATION	STATION	OFFSET	SPBGR TY A 6FT POSTS (FOOT)	TRAF BAR TERM T6 (EACH)	TR BAR TRM T1 SPL TAN (EACH)	TERMINAL MARKER-DA (EACH)	GRDRAIL REF TYPE A (EACH)	LINEAR DELIN PANELS 4 (EACH)	LINEAR DELIN PANELS 6 (EACH)
30+55	31+76	LT/RT		2	2	2	8		
31+34	35+91	LT/RT							14
35+70	38+23	LT/RT	337.5	4			8	6	
38+17	39+75	LT/RT							6
39+71	40+57	LT/RT		2	2	2	8		
TOTAL			337.5	8	4	4	24	6	20

OATES ASSOCIATES
www.oatesassociates.com
ILLINOIS DESIGN FIRM LICENSE NO.: 184.001115

USER NAME = kathryn.stark	DESIGNED -	REVISED -	
	DRAWN -	REVISED -	
	CHECKED -	REVISED -	
PLOT DATE = 6/25/2026	DATE -	REVISED -	

STATE OF ILLINOIS
DEPARTMENT OF TRANSPORTATION

SCHEDULES

SCALE: | SHEET 1 OF 1 SHEETS | STA. | TO STA.

F.A.P RTE.	SECTION	COUNTY	TOTAL SHEETS	SHEET NO.
326	((111)HB1,HVB1)ES	GRUNDY	137	16
		CONTRACT NO. 66M30		
	ILLINOIS	FED. AID PROJECT		

MODEL: Untitled [Sheet]
FILE NAME: H:\P\224055 - D3 V-V PTB 211-23\224055.001 - IL 47 over CSX RR and Buchanan CN 66M30\CADD\Microstation\CADD Drawings\D366M30-sht-Schedules.dgn

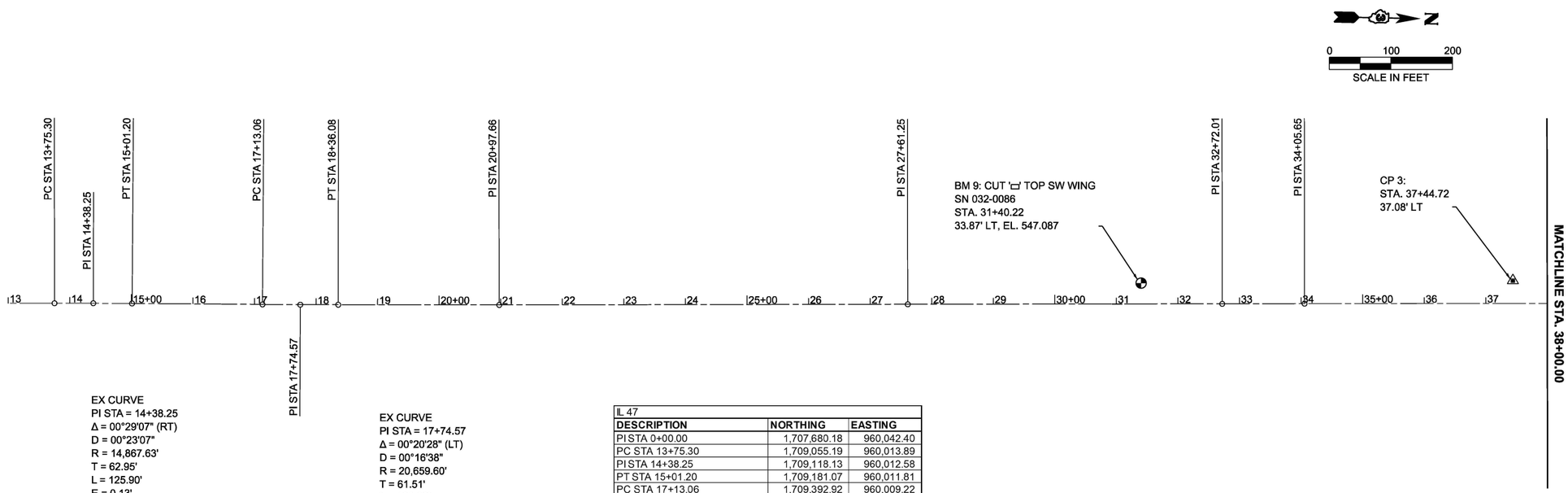

IL 47

DESCRIPTION	NORTHING	EASTING
PI STA 0+00.00	1,707,680.18	960,042.40
PC STA 13+75.30	1,709,055.19	960,013.89
PI STA 14+38.25	1,709,118.13	960,012.58
PT STA 15+01.20	1,709,181.07	960,011.81
PC STA 17+13.06	1,709,392.92	960,009.22
PI STA 17+74.57	1,709,454.42	960,008.46
PT STA 18+36.08	1,709,515.92	960,007.34
PI STA 20+97.66	1,709,777.46	960,002.58
PI STA 27+61.25	1,710,440.90	959,988.62
PI STA 32+72.01	1,710,951.55	959,977.88
PI STA 34+05.65	1,711,085.16	959,975.07
PI STA 39+00.00	1,711,579.40	959,964.67
PC STA 49+40.52	1,712,619.69	959,942.79
PI STA 50+03.52	1,712,682.68	959,941.46
PT STA 50+66.52	1,712,745.67	959,940.83
PC STA 52+16.09	1,712,895.24	959,939.33
PI STA 52+78.95	1,712,958.09	959,938.70
PT STA 53+41.81	1,713,020.94	959,937.38
PC STA 60+65.69	1,713,744.66	959,922.17
PI STA 61+35.00	1,713,813.95	959,920.72
PT STA 62+04.30	1,713,883.25	959,920.10
PI STA 66+42.65	1,714,321.58	959,916.19

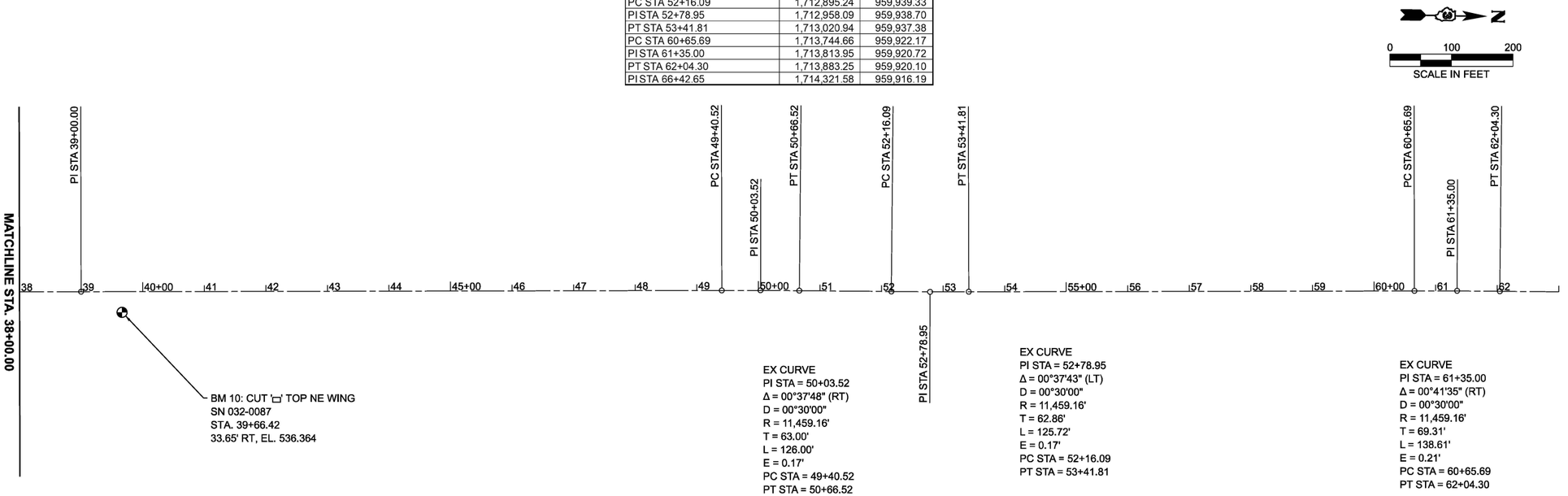

MODEL: ExCL-1 - Plan 1 [Sheet]
FILE NAME: H:\P224055 - D3 V-V PTB 211-230\224055.001 - IL 47 over CSX RR and Buchanan CN 66M30\CADD\Microstation\CADD Drawings\D366M30-sht-ATB.dgn

OATES ASSOCIATES
www.oatesassociates.com
ILLINOIS DESIGN FIRM LICENSE NO.: 184.001115

USER NAME = kevin.botterbush	DESIGNED -	REVISED -	
	DRAWN -	REVISED -	
	CHECKED -	REVISED -	
PLOT DATE = 5/19/2026	DATE -	REVISED -	

STATE OF ILLINOIS
DEPARTMENT OF TRANSPORTATION

ALIGNMENT, TIES AND BENCHMARKS

SCALE: | SHEET 1 OF 2 SHEETS | STA. | TO STA.

F.A.P RTE.	SECTION	COUNTY	TOTAL SHEETS	SHEET NO.
326	((111)HB1,HVB1)ES	GRUNDY	137	17
		CONTRACT NO. 66M30		
		ILLINOIS	FED. AID PROJECT	

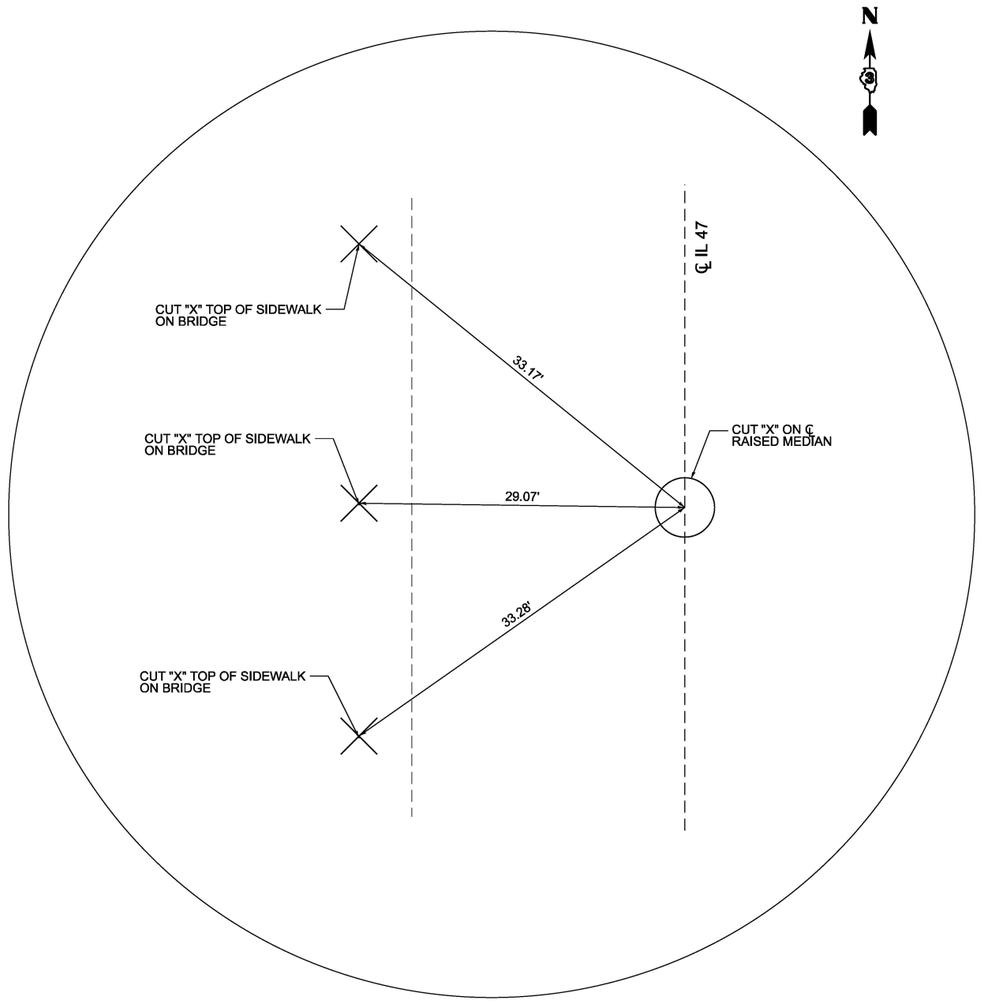

POT STA. 34+05.65
℄ IL 47

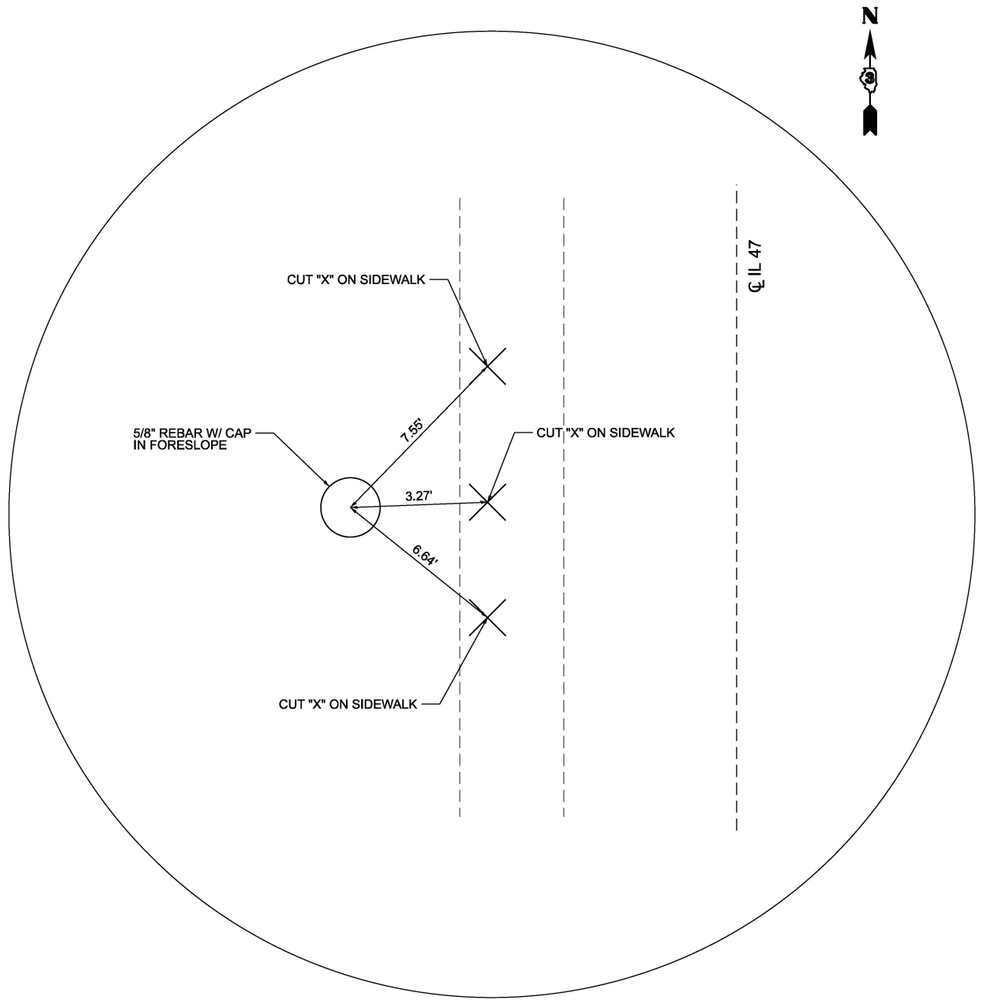

CP 3 STA. 37+44.22, 37.08' LT
℄ IL 47

MODEL: Untitled [Sheet]
FILE NAME: H:\P\22\4055 - D3 V-V PTB 211-23\22\4055.001 - IL 47 over CSX RR and Buchanan CN 66M30\CADD\Microstation\CADD Drawings\D366M30-sht-Ties.dgn

OATES ASSOCIATES
www.oatesassociates.com
ILLINOIS DESIGN FIRM LICENSE NO.: 184.001115

USER NAME = kevin.botterbush	DESIGNED -	REVISED -
	DRAWN -	REVISED -
	CHECKED -	REVISED -
PLOT DATE = 5/19/2026	DATE -	REVISED -

STATE OF ILLINOIS
DEPARTMENT OF TRANSPORTATION

ALIGNMENT, TIES AND BENCHMARKS

SCALE: | SHEET 2 OF 2 SHEETS | STA. | TO STA.

F.A.P RTE.	SECTION	COUNTY	TOTAL SHEETS	SHEET NO.
326	((111)HB1,HVB1)ES	GRUNDY	137	18
		CONTRACT NO. 66M30		
	ILLINOIS	FED. AID PROJECT		

0 20 40
SCALE IN FEET

NOTE:

EXISTING CONDUIT IS ATTACHED
TO STRUCTURE. TO BE REPLACED.
SEE STRUCTURE PLANS

* SALVAGE AND USE EXISTING PIPE TO CONNECT PROPOSED MANHOLE WITH EXISTING STORM SEWER SYSTEM

* PAVEMENT TO BE REMOVED UNDER MEDIAN INCLUDED WITH PAVEMENT REMOVAL

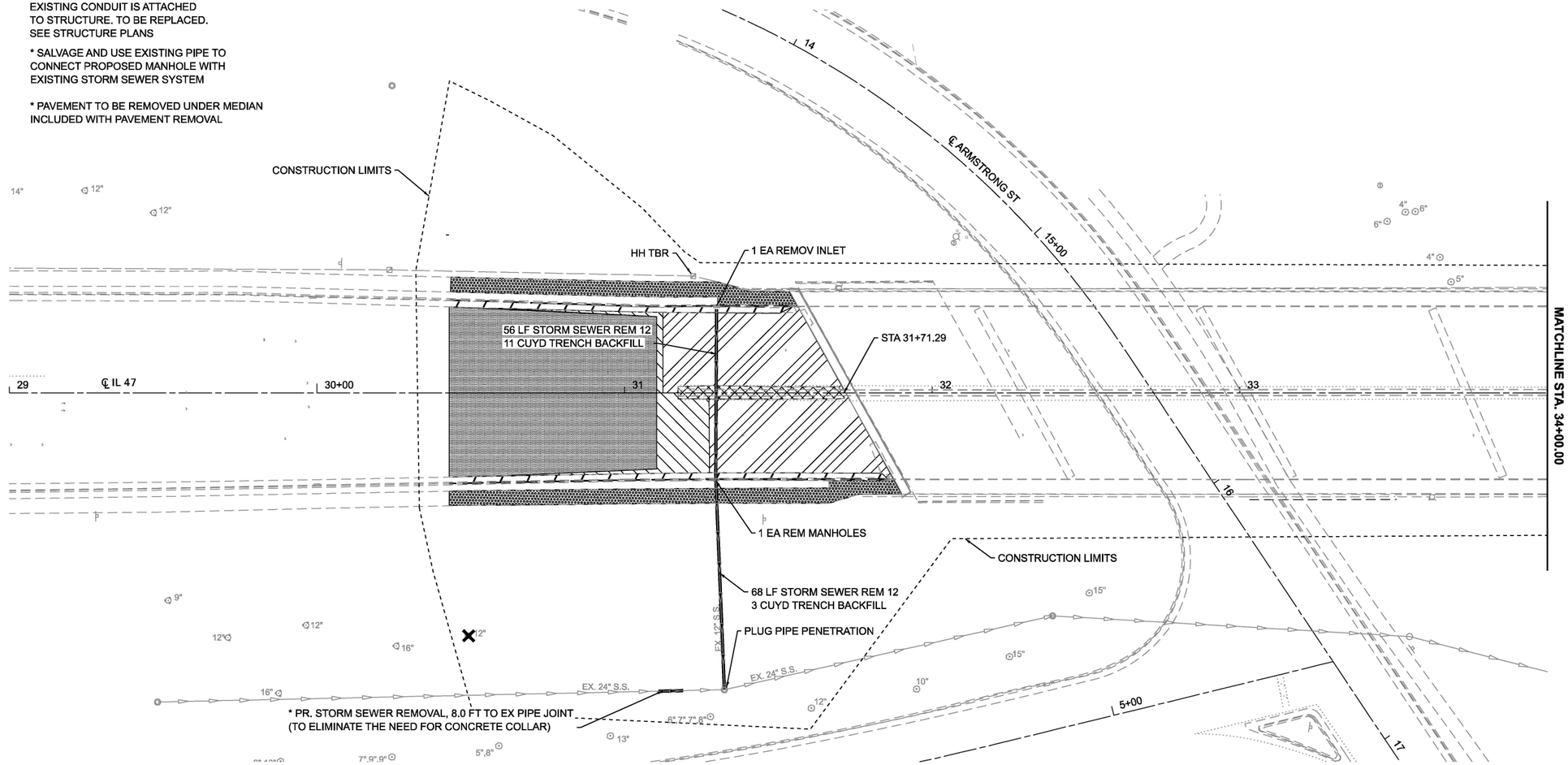

REMOVAL LEGEND

SIDEWALK REMOVAL	CONCRETE CURB AND GUTTER REMOVAL
HOT-MIX ASPHALT SURFACE REMOVAL, 1.5"	TREE REMOVAL, UNITS
MEDIAN REMOVAL	PAVEMENT REMOVAL
APPROACH SLAB REMOVAL	STORM SEWER REMOVAL

MODEL: IL 47 Removals - Plan 1 [Sheet]
FILE NAME: H:\P\224055 - D3 V-V PTB 211-23\224055.001 - IL 47 over CSX RR and Buchanan CN 66M30\CADD\Microstation\CADD Drawings\D366M30-sht-rem.dgn

OATES ASSOCIATES
www.oatesassociates.com
ILLINOIS DESIGN FIRM LICENSE NO.: 184.001115

USER NAME = kathryn.stark	DESIGNED -	REVISED -
	DRAWN -	REVISED -
	CHECKED -	REVISED -
PLOT DATE = 6/25/2026	DATE -	REVISED -

STATE OF ILLINOIS
DEPARTMENT OF TRANSPORTATION

REMOVAL SHEETS

SCALE: | SHEET 1 OF 2 SHEETS | STA. | TO STA.

F.A.P RTE.	SECTION	COUNTY	TOTAL SHEETS	SHEET NO.
326	((111)HB1,HVB1)ES	GRUNDY	137	19
		CONTRACT NO. 66M30		
	ILLINOIS	FED. AID PROJECT		

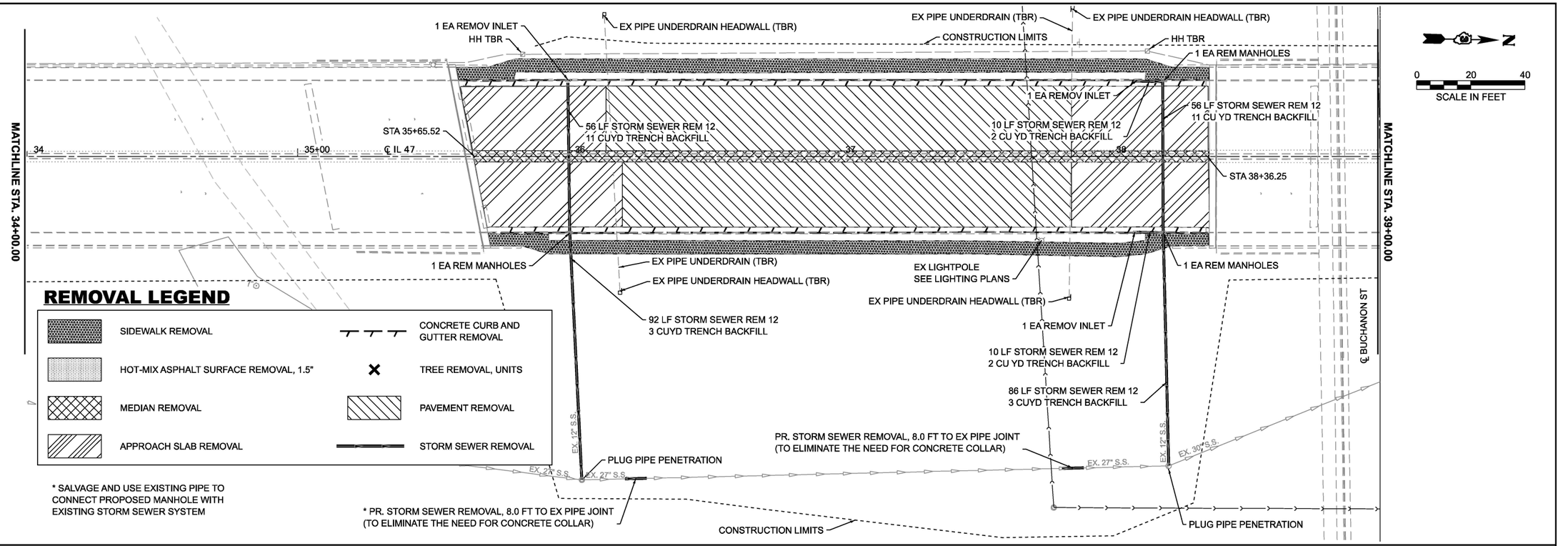

REMOVAL LEGEND

- SIDEWALK REMOVAL
- HOT-MIX ASPHALT SURFACE REMOVAL, 1.5"
- MEDIAN REMOVAL
- APPROACH SLAB REMOVAL
- CONCRETE CURB AND GUTTER REMOVAL
- TREE REMOVAL, UNITS
- PAVEMENT REMOVAL
- STORM SEWER REMOVAL

* SALVAGE AND USE EXISTING PIPE TO CONNECT PROPOSED MANHOLE WITH EXISTING STORM SEWER SYSTEM

* PR. STORM SEWER REMOVAL, 8.0 FT TO EX PIPE JOINT (TO ELIMINATE THE NEED FOR CONCRETE COLLAR)

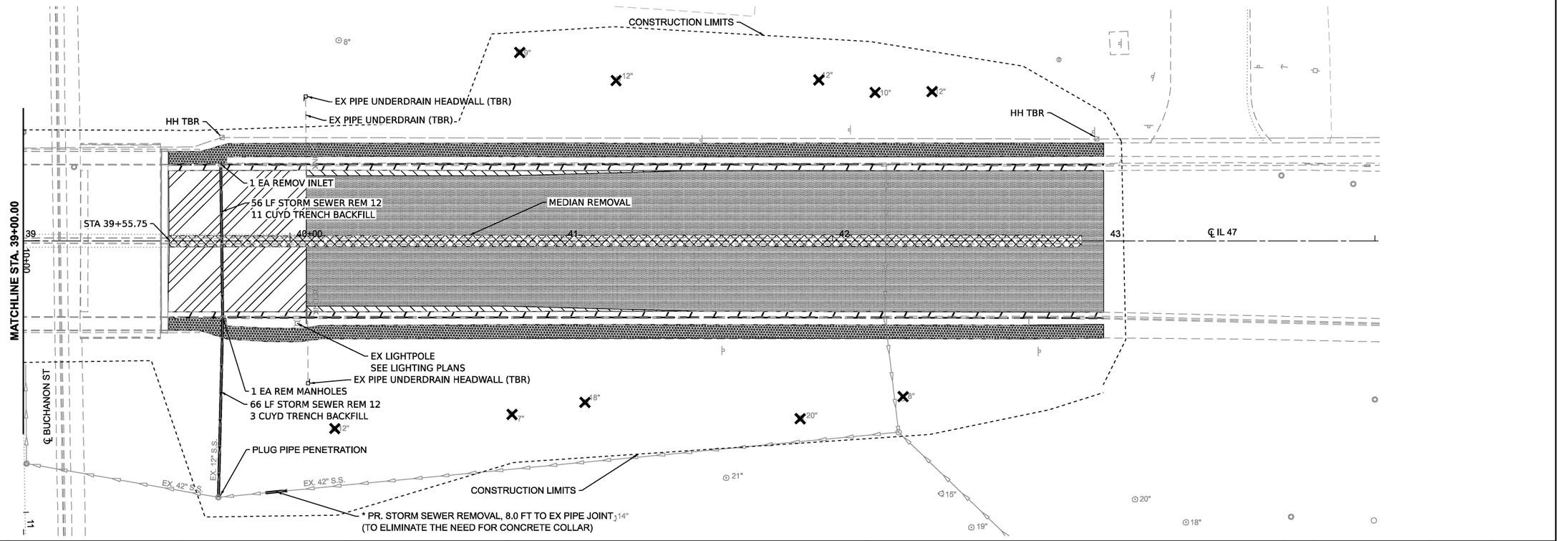

MODEL: IL 47 Removals - Plan 2 [Sheet]
FILE NAME: H:\P224055 - D3 V-V PTB 211-233\224055.001 - IL 47 over CSX RR and Buchanan CN 66M30\CADD\Microstation\CADD Drawings\D366M30-sht-rem.dgn

OATES ASSOCIATES
www.oatesassociates.com
ILLINOIS DESIGN FIRM LICENSE NO.: 184.001115

USER NAME = kathryn.stark	DESIGNED -	REVISED -
	DRAWN -	REVISED -
	CHECKED -	REVISED -
PLOT DATE = 6/25/2026	DATE -	REVISED -

STATE OF ILLINOIS
DEPARTMENT OF TRANSPORTATION

REMOVAL SHEETS

SCALE: | SHEET 2 OF 2 SHEETS | STA. | TO STA.

F.A.P RTE.	SECTION	COUNTY	TOTAL SHEETS	SHEET NO.
326	((111)HB1,HVB1)ES	GRUNDY	137	20
		CONTRACT NO. 66M30		
	ILLINOIS	FED. AID PROJECT		

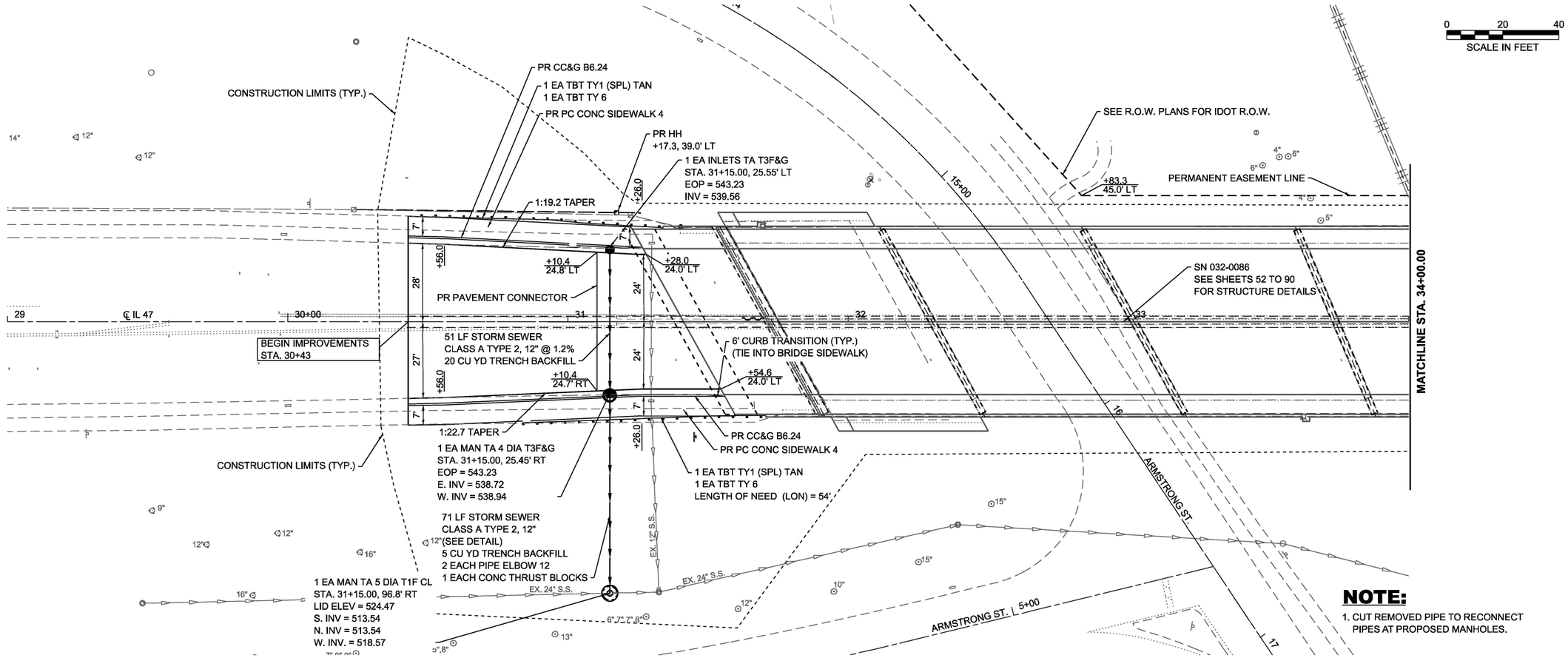

NOTE:

1. CUT REMOVED PIPE TO RECONNECT PIPES AT PROPOSED MANHOLES.

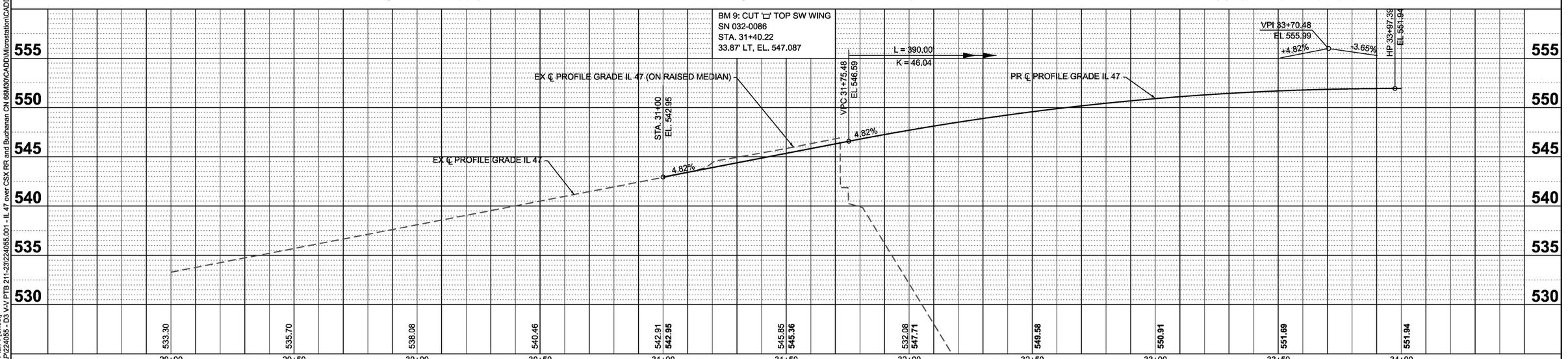

MODEL: IL 47 - Plan 1 [Sheet]
FILE NAME: H:\P224055 - D3 V-V PTB 211-23\224055.001 - IL 47 over CSX RR and Buchanan CN 66M30\CADD\Microstation\CADD Drawings\D3666M30-sht-plnprf.dgn

OATES ASSOCIATES
www.oatesassociates.com
ILLINOIS DESIGN FIRM LICENSE NO.: 184.001115

USER NAME = ryne.wirtjes	DESIGNED -	REVISED -
	DRAWN -	REVISED -
	CHECKED -	REVISED -
PLOT DATE = 5/21/2026	DATE -	REVISED -

STATE OF ILLINOIS
DEPARTMENT OF TRANSPORTATION

PLAN AND PROFILE SHEETS

SCALE: | SHEET 1 OF 3 SHEETS | STA. | TO STA.

F.A.P RTE.	SECTION	COUNTY	TOTAL SHEETS	SHEET NO.
326	((111)HB1,HVB1)ES	GRUNDY	137	21
		CONTRACT NO. 66M30		
		ILLINOIS	FED. AID PROJECT	

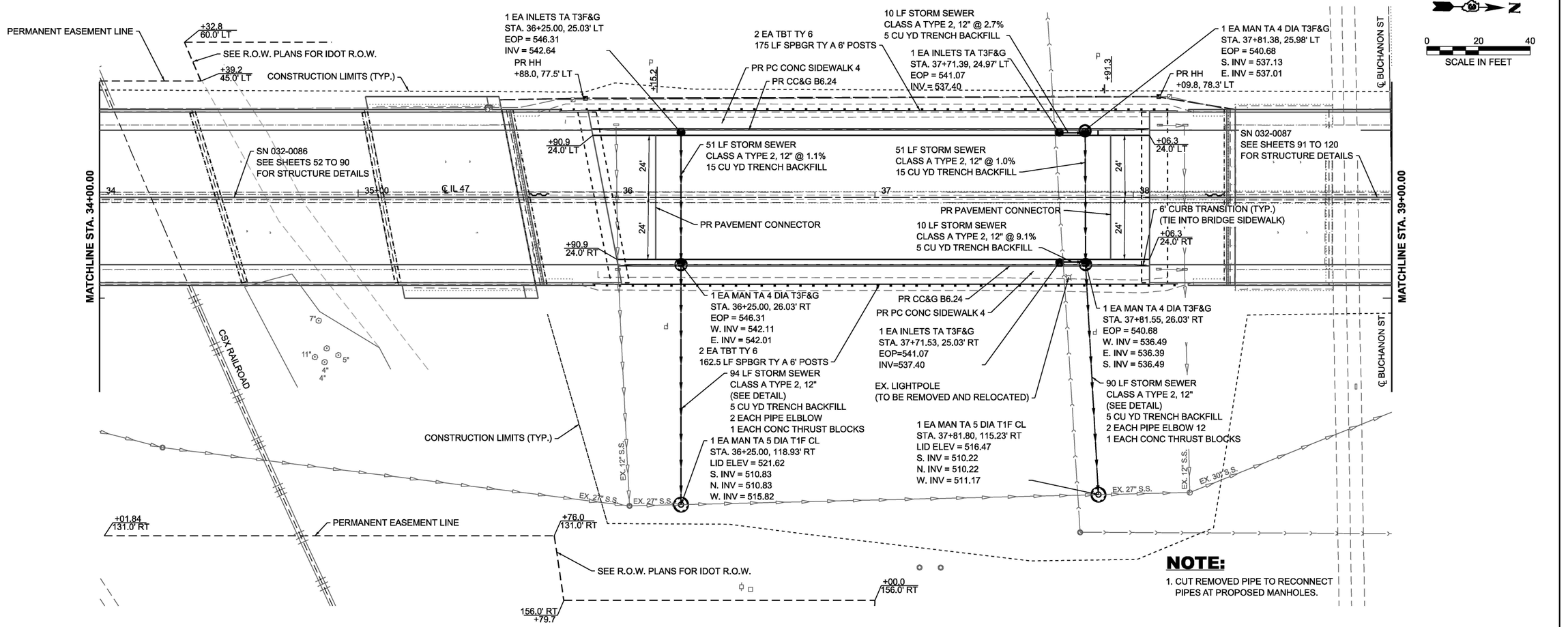

NOTE:

1. CUT REMOVED PIPE TO RECONNECT PIPES AT PROPOSED MANHOLES.

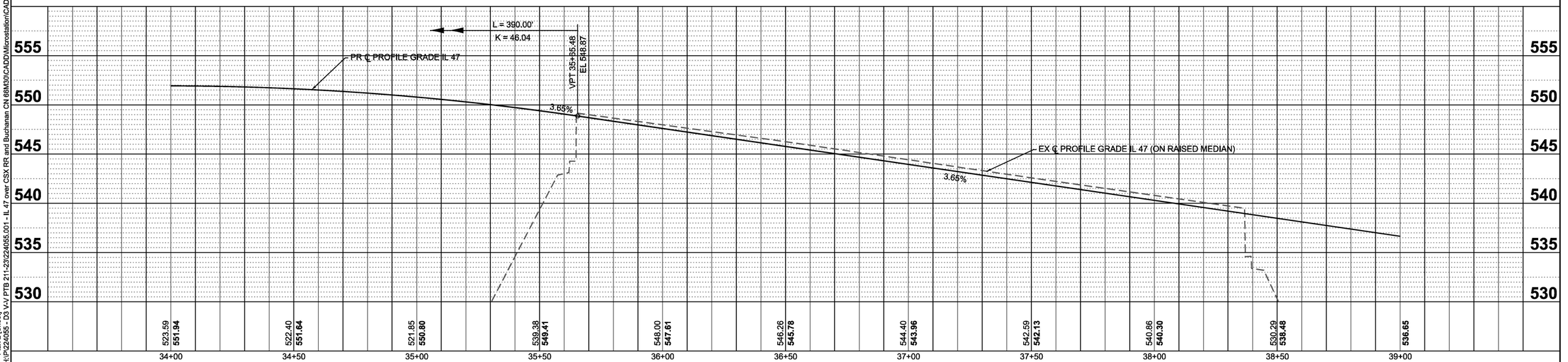

MODEL: IL 47 - Plan 2 [Sheet]
FILE NAME: H:\P2224055 - D3 VAV PTB 211-23\2224055.001 - IL 47 over CSX RR and Buchanan CN 66M30\CADD\Microstation\CADD Drawings\D366M30-sht-2lnprf.dgn

OATES ASSOCIATES
www.oatesassociates.com
ILLINOIS DESIGN FIRM LICENSE NO.: 184.001115

USER NAME = drew.schonhardt	DESIGNED -	REVISED -
	DRAWN -	REVISED -
	CHECKED -	REVISED -
PLOT DATE = 6/10/2026	DATE -	REVISED -

STATE OF ILLINOIS
DEPARTMENT OF TRANSPORTATION

PLAN AND PROFILE SHEETS

SCALE: | SHEET 2 OF 3 SHEETS | STA. | TO STA.

F.A.P RTE.	SECTION	COUNTY	TOTAL SHEETS	SHEET NO.
326	((111)HB1,HVB1)ES	GRUNDY	137	22
		CONTRACT NO. 66M30		
	ILLINOIS FED. AID PROJECT			

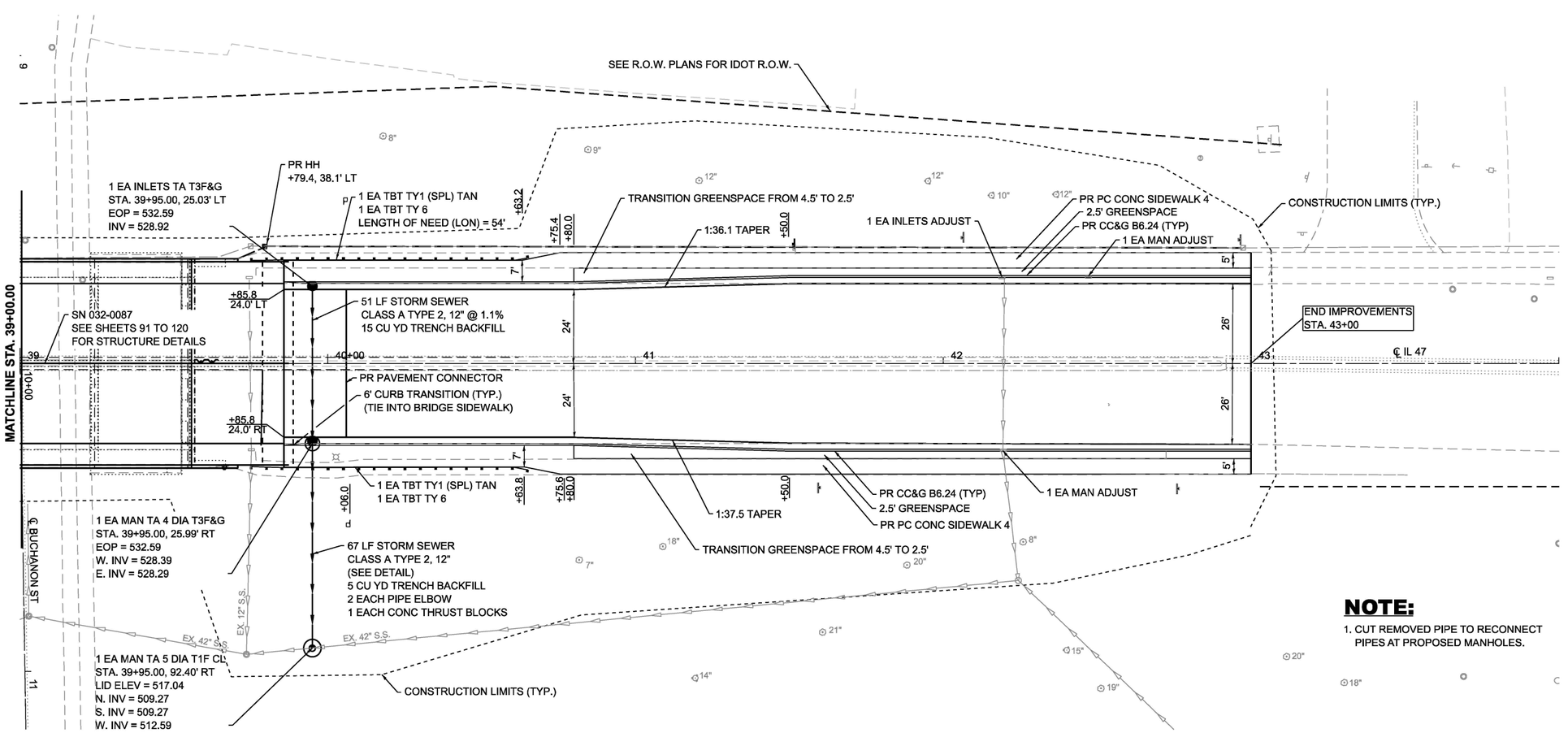

NOTE:

1. CUT REMOVED PIPE TO RECONNECT PIPES AT PROPOSED MANHOLES.

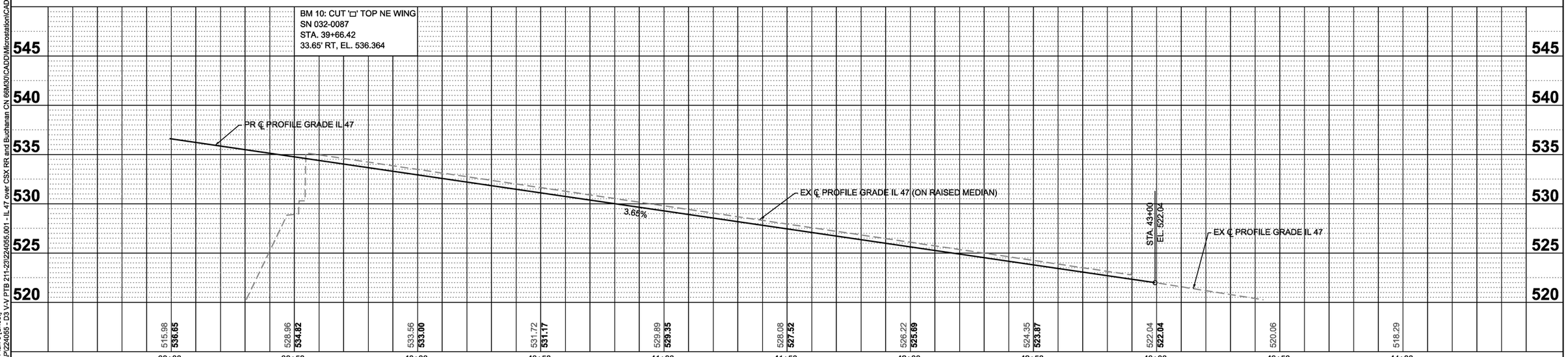

MODEL: IL 47 - Plan 3 [Sheet]
FILE NAME: H:\P\224055 - D3 V-V PTB 211-23\224055.001 - IL 47 over CSX RR and Buchanan CN 66M30\CADD\Microstation\CADD Drawings\D366M30-sht-plnprf.dgn

OATES ASSOCIATES
www.oatesassociates.com
ILLINOIS DESIGN FIRM LICENSE NO.: 184.001115

USER NAME = kevin.botterbush	DESIGNED -	REVISED -
	DRAWN -	REVISED -
	CHECKED -	REVISED -
PLOT DATE = 6/22/2026	DATE -	REVISED -

STATE OF ILLINOIS
DEPARTMENT OF TRANSPORTATION

PLAN AND PROFILE SHEETS

SCALE: | SHEET 3 OF 3 SHEETS | STA. | TO STA.

F.A.P RTE.	SECTION	COUNTY	TOTAL SHEETS	SHEET NO.
326	((111)HB1,HVB1)ES	GRUNDY	137	23
		CONTRACT NO. 66M30		
	ILLINOIS	FED. AID PROJECT		

NOTES:

1. THIS STAGE INCLUDES STAGE 1 CONSTRUCTION FROM STA 30+43 TO STA 43+00.
2. SEE HWY STD 701611-01 AND 701606-10 FOR ADDITIONAL REQUIREMENTS.
3. UNDERSIDE OF PARAPET NEEDS TO BE PROTECTED DURING EXISTING DECK REMOVAL TO PREVENT DEBRIS FROM FALLING INTO ONCOMING TRAFFIC.
4. TEMPORARY INFORMATION SIGNING TO BE PLACED AT THE FOLLOWING INTERSECTIONS:
   IL 47 & US 6
   IL 47 & WASHINGTON ST
5. UPON COMPLETION OF CONSTRUCTION, ALL PAVEMENT MARKINGS OUTSIDE OF PROJECT LIMITS SHALL BE STRIPED TO PRE-CONSTRUCTION CONDITIONS.
6. THE DETOUR AHEAD AND ROAD CONSTRUCTION SIGNS ARE TO BE 48" X 48".
7. ORANGE CONSTRUCTION SIGNS TO BE FLUORESCENT ORANGE.
8. ALL IL 47 TRAVEL LANES WITHIN THE PROJECT LIMITS SHALL BE OPEN TO TRAFFIC AND THE PUBLIC BY DECEMBER 1 OF EACH CONSTRUCTION YEAR. MEETING THIS REQUIREMENT MAY REQUIRE REMOVAL AND REINSTALLATION OF THE STAGED TRAFFIC CONTROL DEVICES AS SHOWN IN THE TRAFFIC CONTROL PLAN.

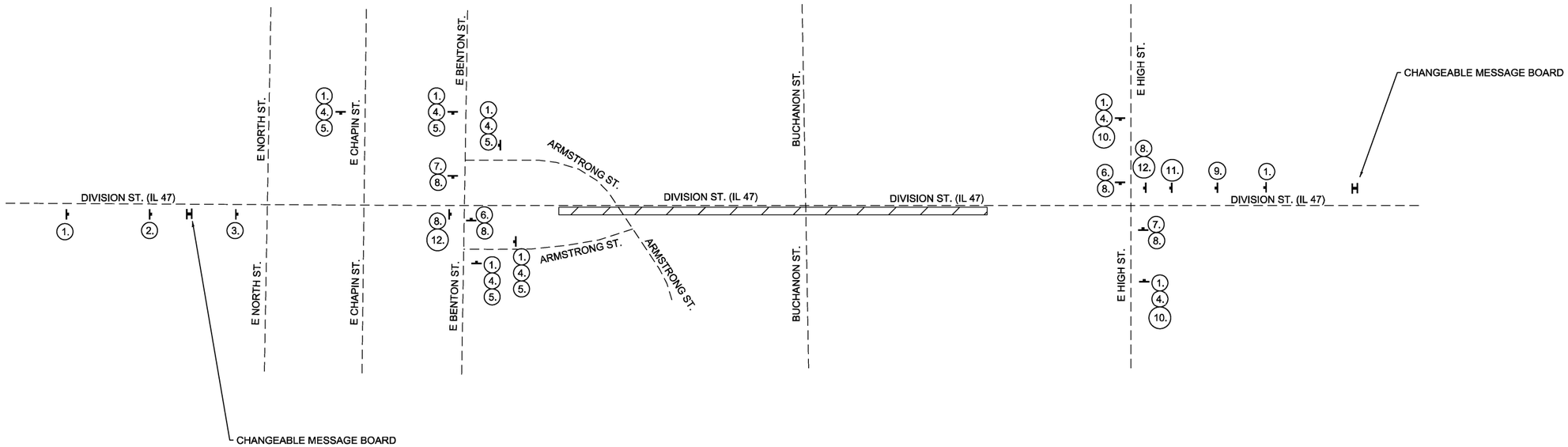

LEGEND

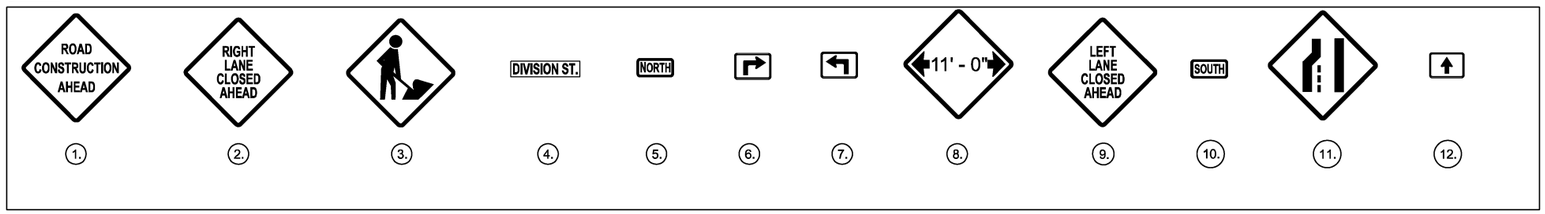

MODEL: Untitled-1 [Sheet]
FILE NAME: H:\P224055 - D3 V-V PTB 211-233224055.001 - IL 47 over CSX RR and Buchanan CN 66M30\CADD\Microstation\CADD Drawings\D366M30-sht-Stage1 overview.dgn

OATES ASSOCIATES
www.oatesassociates.com
ILLINOIS DESIGN FIRM LICENSE NO.: 184.001115

USER NAME = kathryn.stark	DESIGNED -	REVISED -
	DRAWN -	REVISED -
	CHECKED -	REVISED -
PLOT DATE = 6/25/2026	DATE -	REVISED -

STATE OF ILLINOIS
DEPARTMENT OF TRANSPORTATION

STAGE 1 OVERVIEW
TRAFFIC CONTROL PLAN

SCALE: | SHEET 1 OF 14 SHEETS | STA. | TO STA.

F.A.P RTE.	SECTION	COUNTY	TOTAL SHEETS	SHEET NO.
326	((111)HB1,HVB1)ES	GRUNDY	137	24
		CONTRACT NO. 66M30		
	ILLINOIS	FED. AID PROJECT		

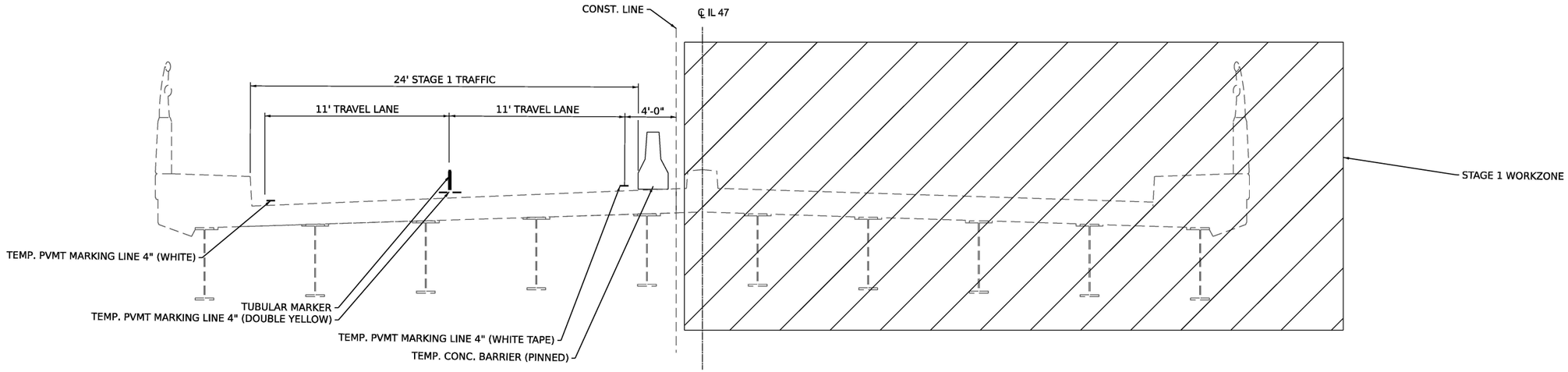

STAGE 1 TYPICAL SECTION (SN 032-0086 /0087)

(LOOKING NORTH)

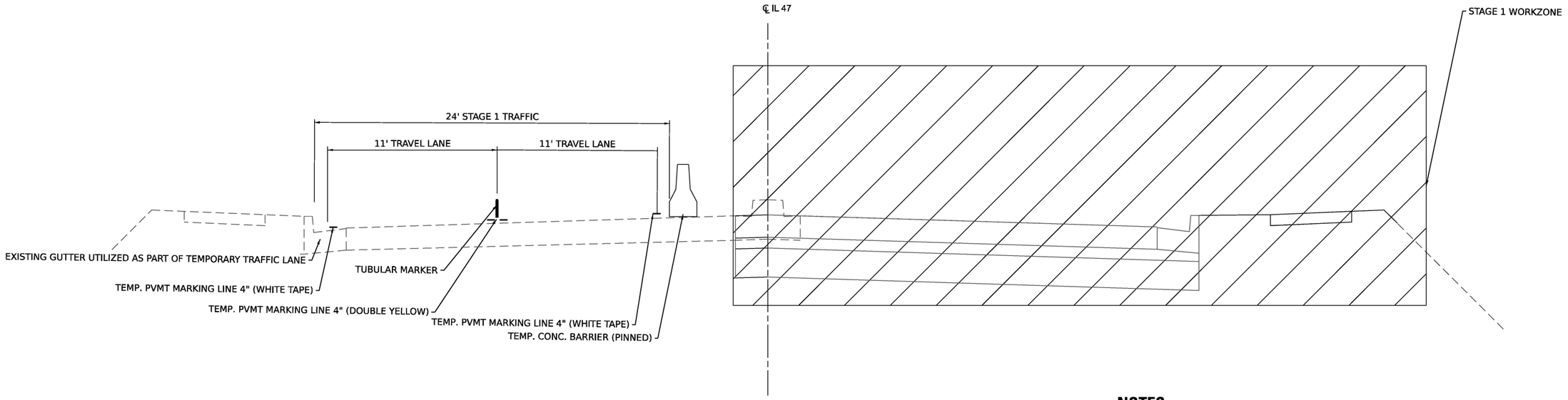

NOTES:

1. TYPE III BARRICADES SHALL NOT BE UTILIZED AT ANY STAGED CONSTRUCTION.

STAGE 1 TYPICAL SECTION (ROADWAY)

(LOOKING NORTH)

MODEL: Untitled-1 [Sheet]
FILE NAME: H:\P224055 - D3 V-V PTB 211-23\224055.001 - IL 47 over CSX RR and Buchanan CN 66M30\CADD\Microstation\CADD Drawings\D366M30-sht-typicals.dgn

OATES ASSOCIATES
www.oatesassociates.com
ILLINOIS DESIGN FIRM LICENSE NO.: 184.001115

USER NAME = ryne.wirtjes	DESIGNED -	REVISED -	
	DRAWN -	REVISED -	
	CHECKED -	REVISED -	
PLOT DATE = 5/21/2026	DATE -	REVISED -	

STATE OF ILLINOIS
DEPARTMENT OF TRANSPORTATION

STAGE 1 TYPICAL SECTIONS
TRAFFIC CONTROL PLAN

SCALE: | SHEET 2 OF 14 SHEETS | STA. | TO STA.

F.A.P RTE.	SECTION	COUNTY	TOTAL SHEETS	SHEET NO.
326	((111)HB1,HVB1)ES	GRUNDY	137	25
		CONTRACT NO. 66M30		
	ILLINOIS FED. AID PROJECT			

NOTES:

SEE HWY STD 701611-01 FOR ADDITIONAL SIGNING REQUIREMENTS LEADING TO LANE CLOSURE.

ALL STATION CALLOUTS FOR TEMPORARY CONCRETE BARRIER ARE TO TRAFFIC SIDE.

THIS STAGE INCLUDES RECONSTRUCTION OF THE EAST SIDE OF THE BRIDGE AND ROAD.

BIDIRECTIONAL TURN LANE OPEN FOR LEFT TURNS TO ENTRANCES, SIDE STREETS, AND RESIDENTIAL ACCESS.

REMOVE CONFLICTING PAVEMENT MARKINGS, AND REPLACE PAVEMENT MARKING PRIOR TO STAGE 2.

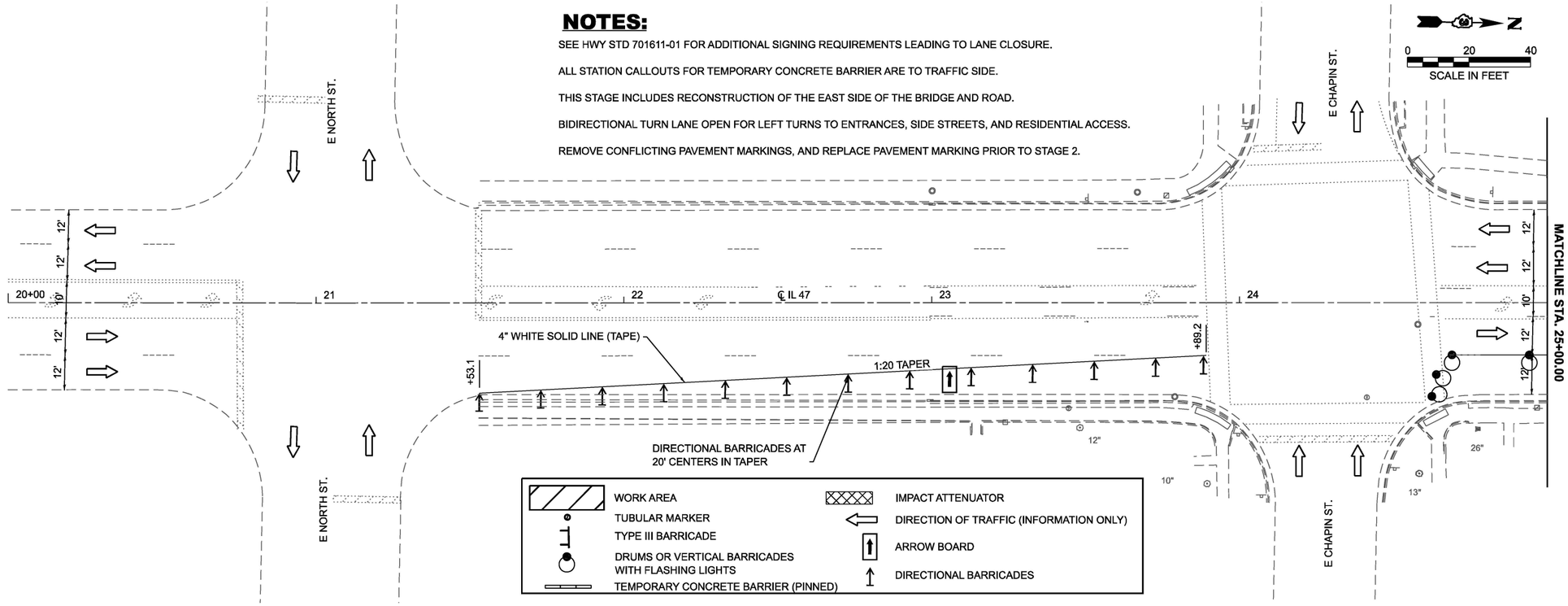

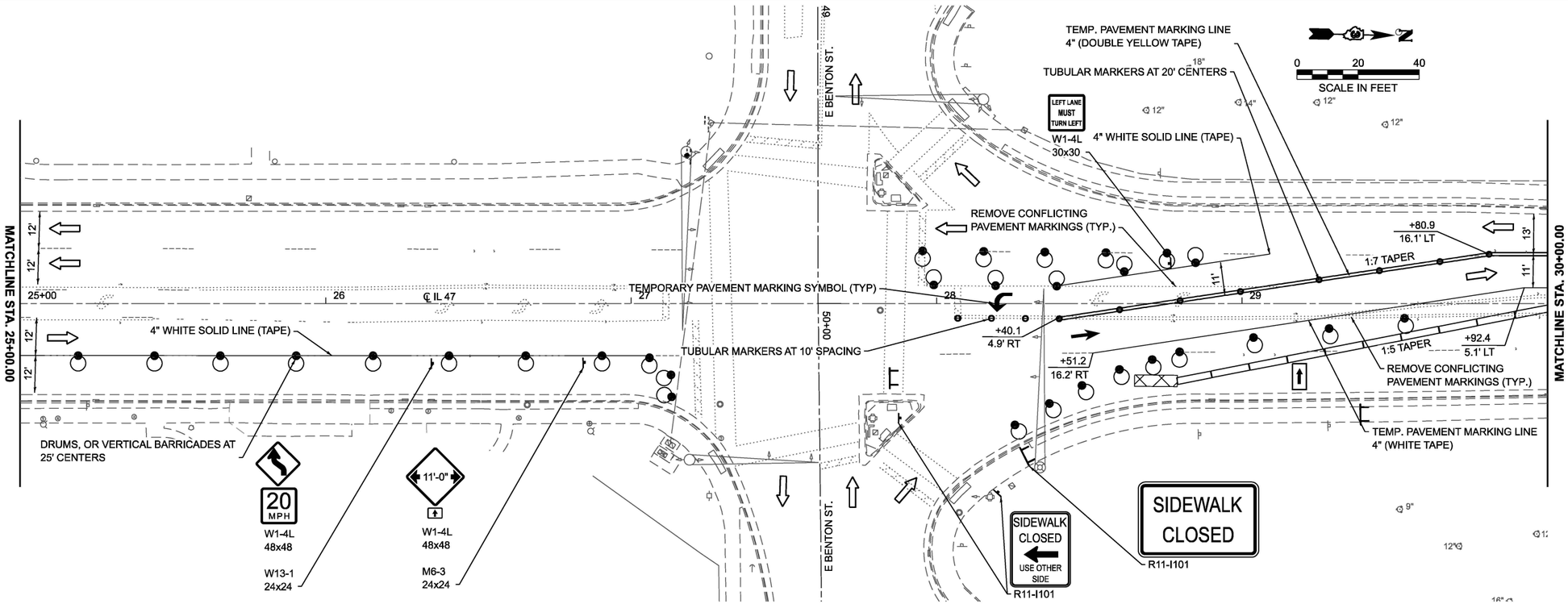

MODEL: ExCL - Plan 1 [Sheet]
FILE NAME: H:\P\224055 - D3 V-V PTB 211-23\224055.001 - IL 47 over CSX RR and Buchanan CN 66M30\CADD\Microstation\CADD Drawings\D366M30-sht-Stage1.dgn

OATES ASSOCIATES
www.oatesassociates.com
ILLINOIS DESIGN FIRM LICENSE NO.: 184.001115

USER NAME = drew.schonhardt	DESIGNED -	REVISED -
	DRAWN -	REVISED -
	CHECKED -	REVISED -
PLOT DATE = 6/9/2026	DATE -	REVISED -

STATE OF ILLINOIS
DEPARTMENT OF TRANSPORTATION

STAGE 1 PLAN SHEETS
TRAFFIC CONTROL PLAN

SCALE: | SHEET 3 OF 14 SHEETS | STA. | TO STA.

F.A.P RTE.	SECTION	COUNTY	TOTAL SHEETS	SHEET NO.
326	((111)HB1,HVB1)ES	GRUNDY	137	26
		CONTRACT NO. 66M30		
	ILLINOIS	FED. AID PROJECT		

NOTES:

1. SEE HWY STD 701606-10 FOR ADDITIONAL SIGNING REQUIREMENTS LEADING TO LANE CLOSURE.
2. ALL STATION CALLOUTS FOR TEMPORARY CONCRETE BARRIER ARE TO TRAFFIC SIDE.

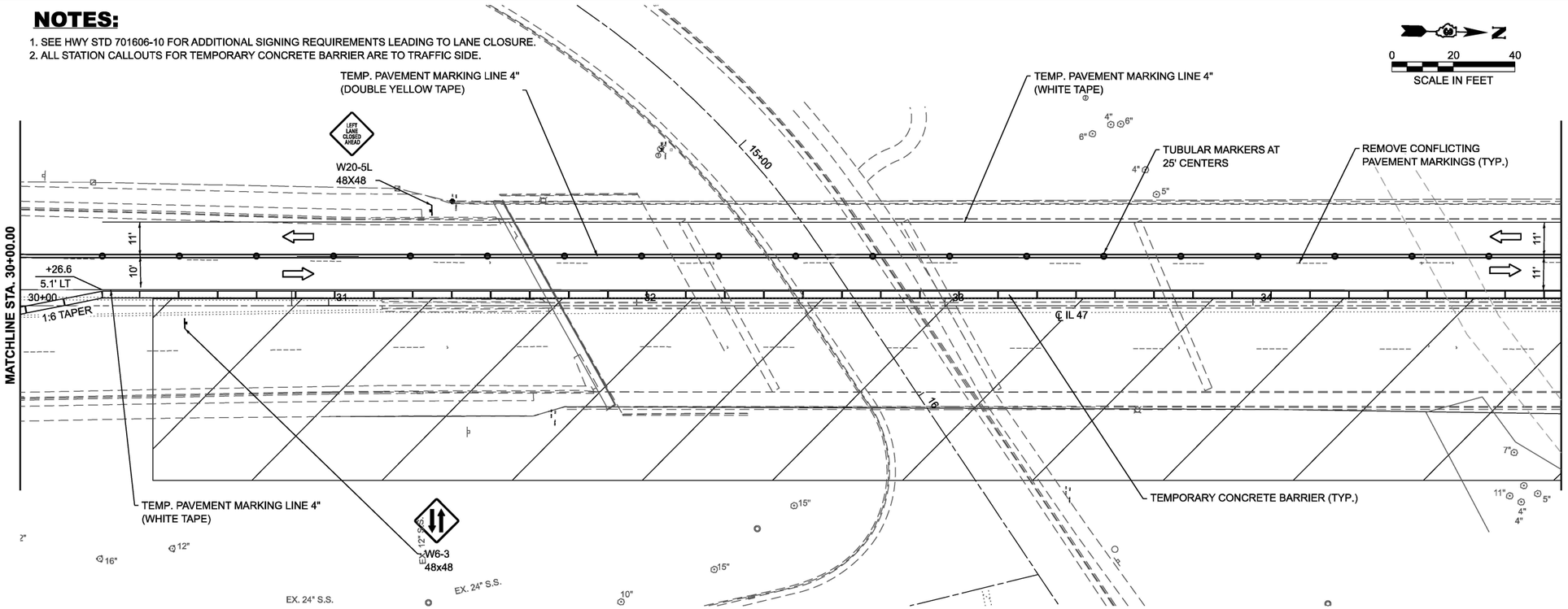

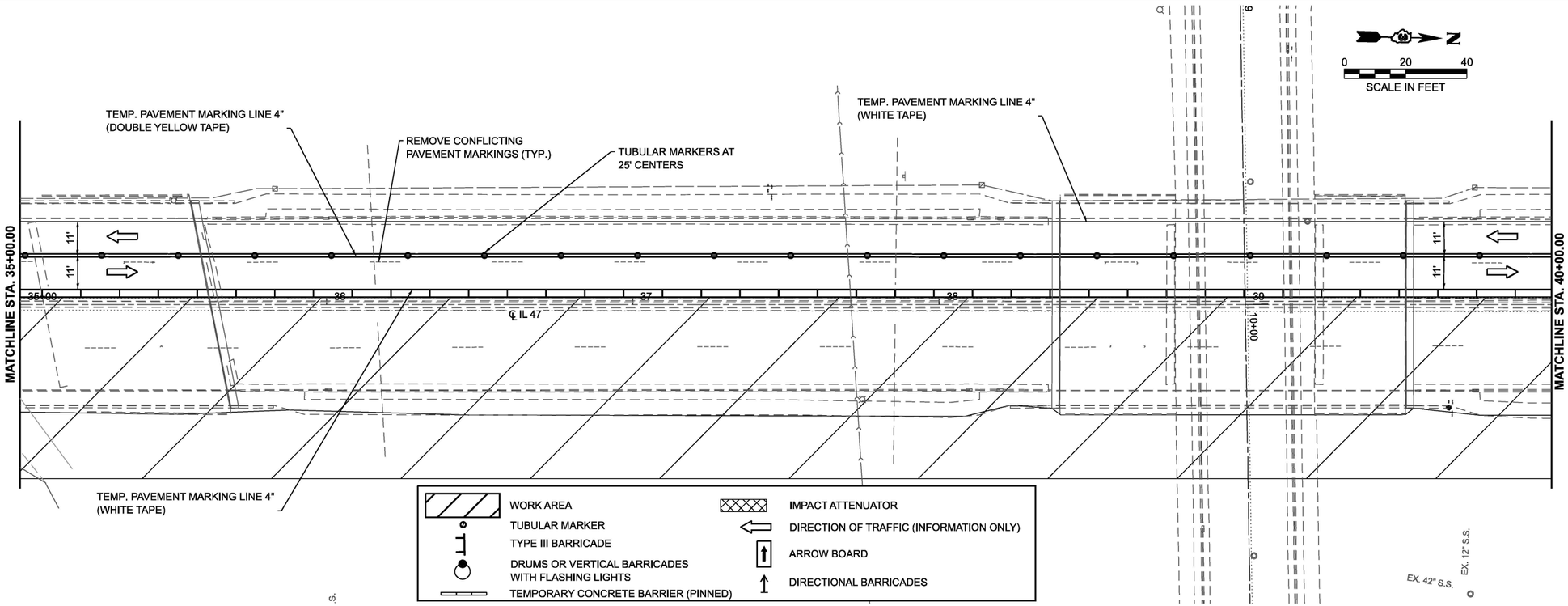

MODEL: ExCL - Plan 3 [Sheet]
FILE NAME: H:\P\224055 - 03 V-V PTB 211-223\224055.001 - IL 47 over CSX RR and Buchanan CN 66M30\CADD\Microstation\CADD Drawings\D366M30-sht-Stage1.dgn

OATES ASSOCIATES
www.oatesassociates.com
ILLINOIS DESIGN FIRM LICENSE NO.: 184.001115

USER NAME = drew.schonhardt	DESIGNED -	REVISED -
	DRAWN -	REVISED -
	CHECKED -	REVISED -
PLOT DATE = 6/3/2026	DATE -	REVISED -

STATE OF ILLINOIS
DEPARTMENT OF TRANSPORTATION

STAGE 1 PLAN SHEETS
TRAFFIC CONTROL PLAN

SCALE: | SHEET 4 OF 14 SHEETS | STA. | TO STA.

F.A.P RTE.	SECTION	COUNTY	TOTAL SHEETS	SHEET NO.
326	((111)HB1,HVB1)ES	GRUNDY	137	27
		CONTRACT NO. 66M30		
	ILLINOIS	FED. AID PROJECT		

NOTES:

1. SEE HWY STD 701606-10 FOR ADDITIONAL SIGNING REQUIREMENTS LEADING TO LANE CLOSURE.
2. ALL STATION CALLOUTS FOR TEMPORARY CONCRETE BARRIER ARE TO TRAFFIC SIDE.

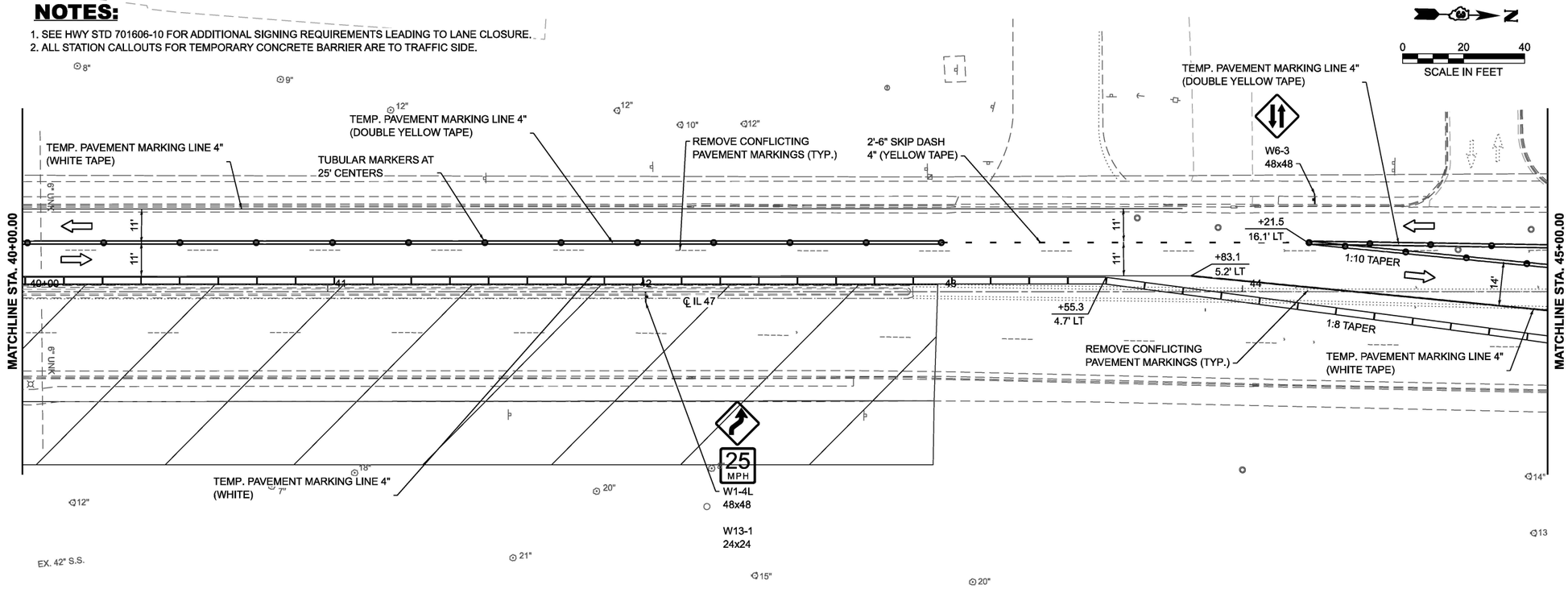

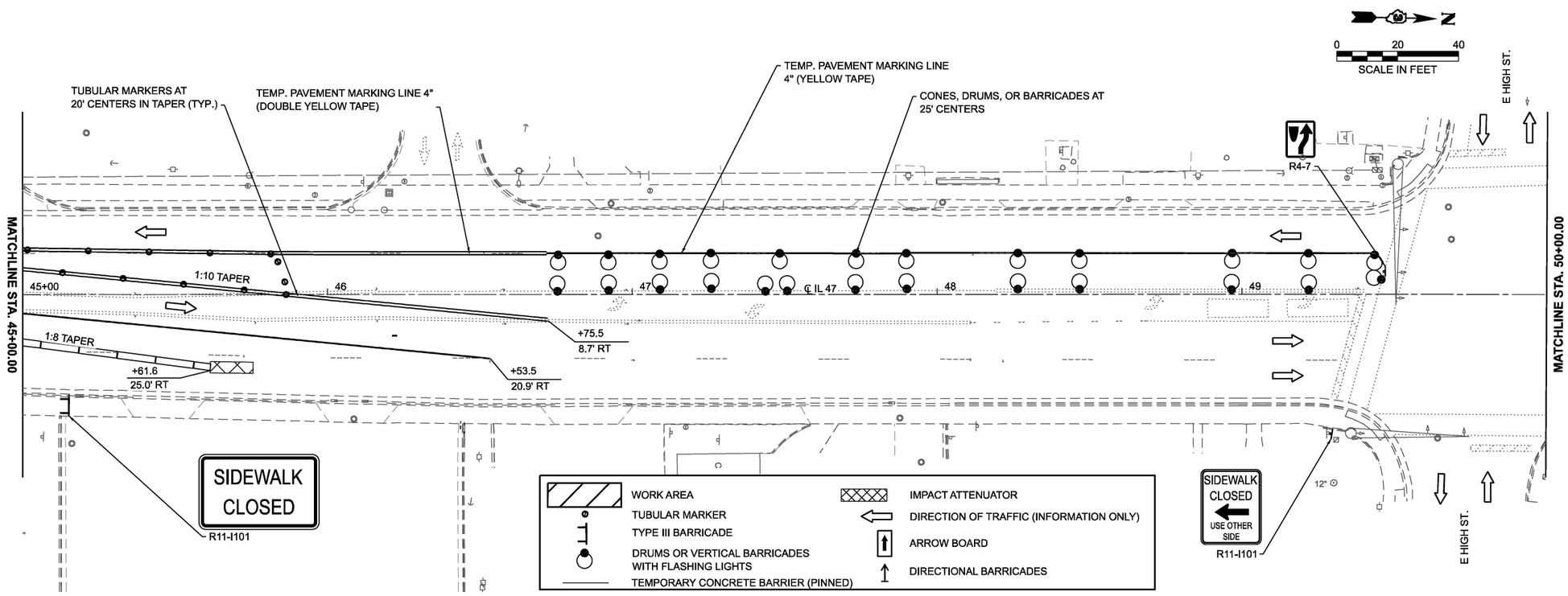

MODEL: ExCL - Plan 5 [Sheet]
FILE NAME: H:\P224055 - D3 V-V PTB 211-23\224055.001 - IL 47 over CSX RR and Buchanan CN 66M30\CADD\Microstation\CADD Drawings\D3866M30-sht-Stage1.dgn

OATES ASSOCIATES
www.oatesassociates.com
ILLINOIS DESIGN FIRM LICENSE NO.: 184.001115

USER NAME = kevin.botterbush	DESIGNED -	REVISED -	
	DRAWN -	REVISED -	
	CHECKED -	REVISED -	
PLOT DATE = 5/19/2026	DATE -	REVISED -	

STATE OF ILLINOIS
DEPARTMENT OF TRANSPORTATION

STAGE 1 PLAN SHEETS
TRAFFIC CONTROL PLAN

SCALE: | SHEET 5 OF 14 SHEETS | STA. | TO STA.

F.A.P RTE.	SECTION	COUNTY	TOTAL SHEETS	SHEET NO.
326	((111)HB1,HVB1)ES	GRUNDY	137	28
		CONTRACT NO. 66M30		
	ILLINOIS	FED. AID PROJECT		

NOTES:

1. SEE HWY STD 701606-10 FOR ADDITIONAL SIGNING REQUIREMENTS LEADING TO LANE CLOSURE.
2. ALL STATION CALLOUTS FOR TEMPORARY CONCRETE BARRIER ARE TO TRAFFIC SIDE.

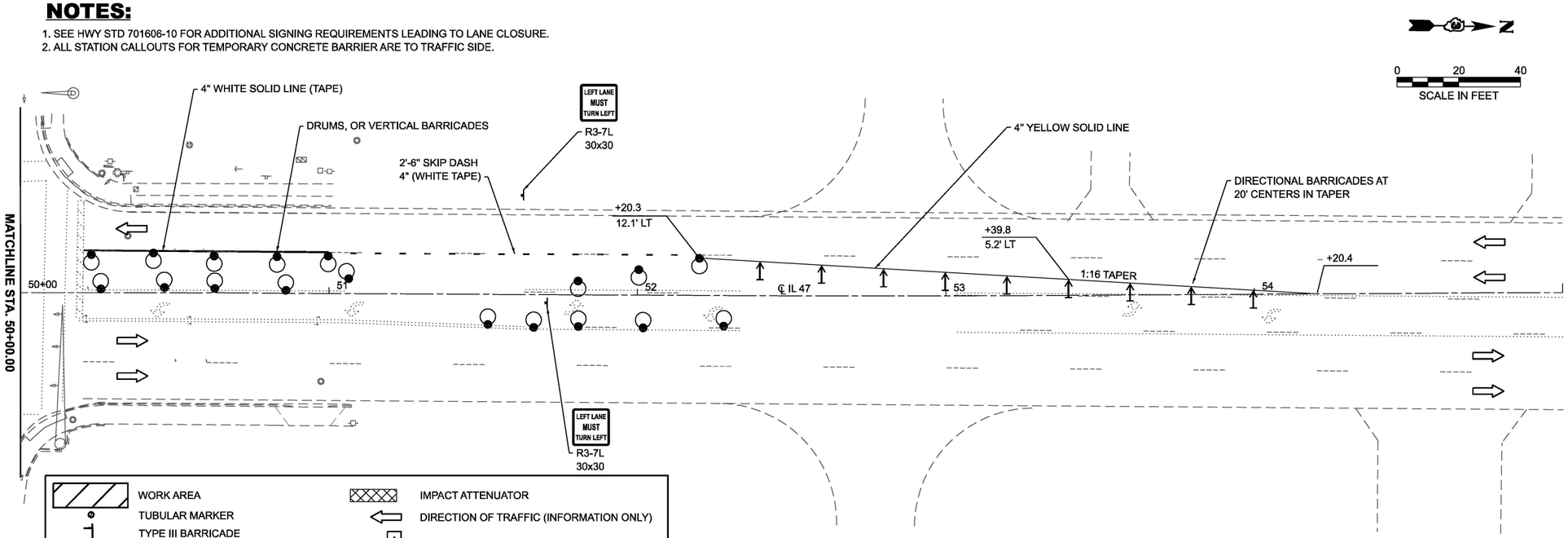

MODEL: ExCL - Plan 7 [Sheet]
FILE NAME: H:\P224055 - D3 V-V PTB 211-23\224055.001 - IL 47 over CSX RR and Buchanan CN 66M30\CADD\Microstation\CADD Drawings\D366M30-sht-Stage1.dgn

OATES ASSOCIATES
www.oatesassociates.com
ILLINOIS DESIGN FIRM LICENSE NO.: 184.001115

USER NAME = kevin.botterbush	DESIGNED -	REVISED -
	DRAWN -	REVISED -
	CHECKED -	REVISED -
PLOT DATE = 5/19/2026	DATE -	REVISED -

STATE OF ILLINOIS
DEPARTMENT OF TRANSPORTATION

STAGE 1 PLAN SHEETS
TRAFFIC CONTROL PLAN

SCALE: | SHEET 6 OF 14 SHEETS | STA. | TO STA.

F.A.P RTE.	SECTION	COUNTY	TOTAL SHEETS	SHEET NO.
326	((111)HB1,HVB1)ES	GRUNDY	137	29
		CONTRACT NO. 66M30		
	ILLINOIS	FED. AID PROJECT		

NOTES:

1. THIS STAGE INCLUDES STAGE 2 CONSTRUCTION FROM STA 30+43 TO STA 43+00.
2. SEE HWY STD 701611-01 AND 701606-10 FOR ADDITIONAL REQUIREMENTS.
3. UNDERSIDE OF PARAPET NEEDS TO BE PROTECTED DURING EXISTING DECK REMOVAL TO PREVENT DEBRIS FROM FALLING INTO ONCOMING TRAFFIC.
4. TEMPORARY INFORMATION SIGNING TO BE PLACED AT THE FOLLOWING INTERSECTIONS:
   IL 47 & US 6
   IL 47 & WASHINGTON ST
5. UPON COMPLETION OF CONSTRUCTION, ALL PAVEMENT MARKINGS OUTSIDE OF PROJECT LIMITS SHALL BE STRIPED TO PRE-CONSTRUCTION CONDITIONS.
6. THE DETOUR AHEAD AND ROAD CONSTRUCTION SIGNS ARE TO BE 48" X 48".
7. ORANGE CONSTRUCTION SIGNS TO BE FLUORESCENT ORANGE.
8. ALL IL 47 TRAVEL LANES WITHIN THE PROJECT LIMITS SHALL BE OPEN TO TRAFFIC AND THE PUBLIC BY DECEMBER 1 OF EACH CONSTRUCTION YEAR. MEETING THIS REQUIREMENT MAY REQUIRE REMOVAL AND REINSTALLATION OF THE STAGED TRAFFIC CONTROL DEVICES AS SHOWN IN THE TRAFFIC CONTROL PLAN.

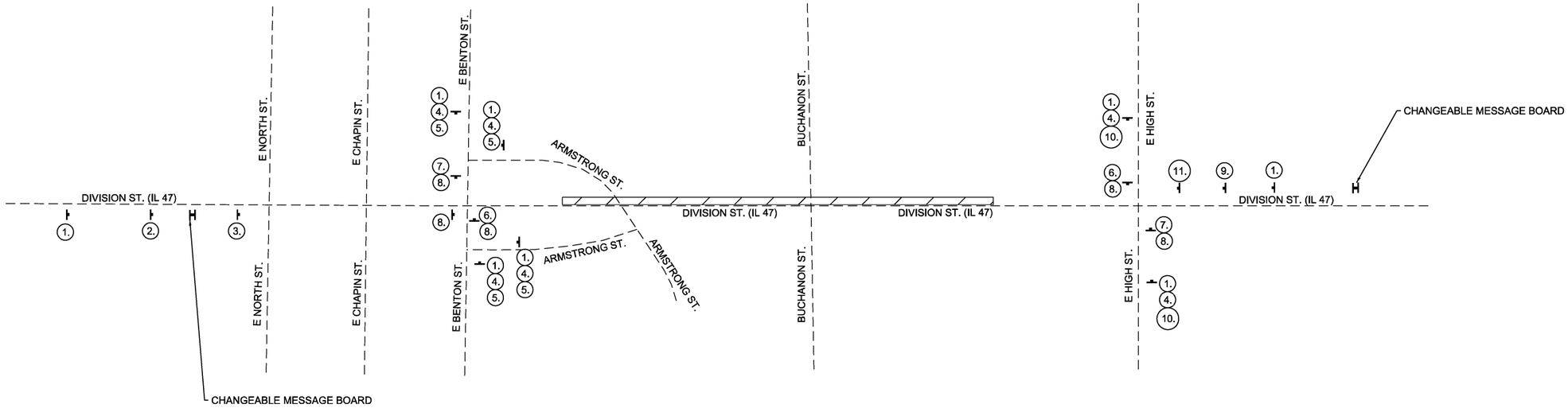

LEGEND

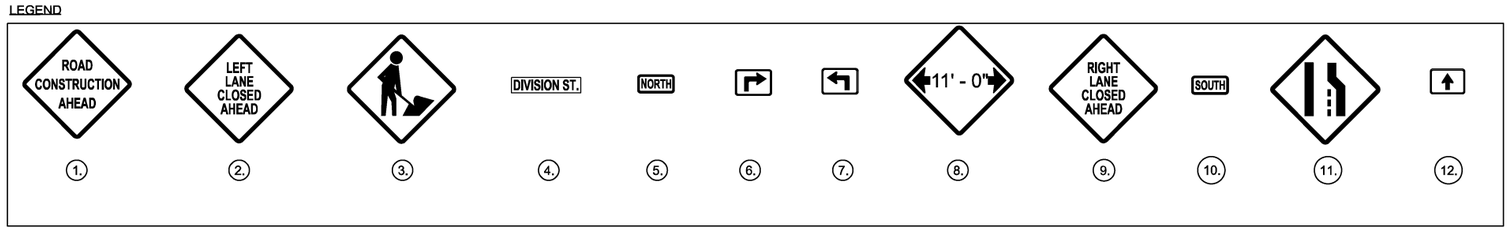

MODEL: Untitled-1 [Sheet]
FILE NAME: H:\P\224055 - D3 V-V PTB 211-23\224055.001 - IL 47 over CSX RR and Buchanan CN 66M30\CADD\Microstation\CADD Drawings\D3866M30-sht-Stage 2 overview.dgn

OATES ASSOCIATES
www.oatesassociates.com
ILLINOIS DESIGN FIRM LICENSE NO.: 184.001115

USER NAME = kathryn.stark	DESIGNED -	REVISED -	
	DRAWN -	REVISED -	
	CHECKED -	REVISED -	
PLOT DATE = 6/25/2026	DATE -	REVISED -	

STATE OF ILLINOIS
DEPARTMENT OF TRANSPORTATION

STAGE 2 OVERVIEW
TRAFFIC CONTROL PLAN

SCALE: | SHEET 7 OF 14 SHEETS | STA. | TO STA.

F.A.P RTE.	SECTION	COUNTY	TOTAL SHEETS	SHEET NO.
326	((111)HB1,HVB1)ES	GRUNDY	137	30
		CONTRACT NO. 66M30		
	ILLINOIS	FED. AID PROJECT		

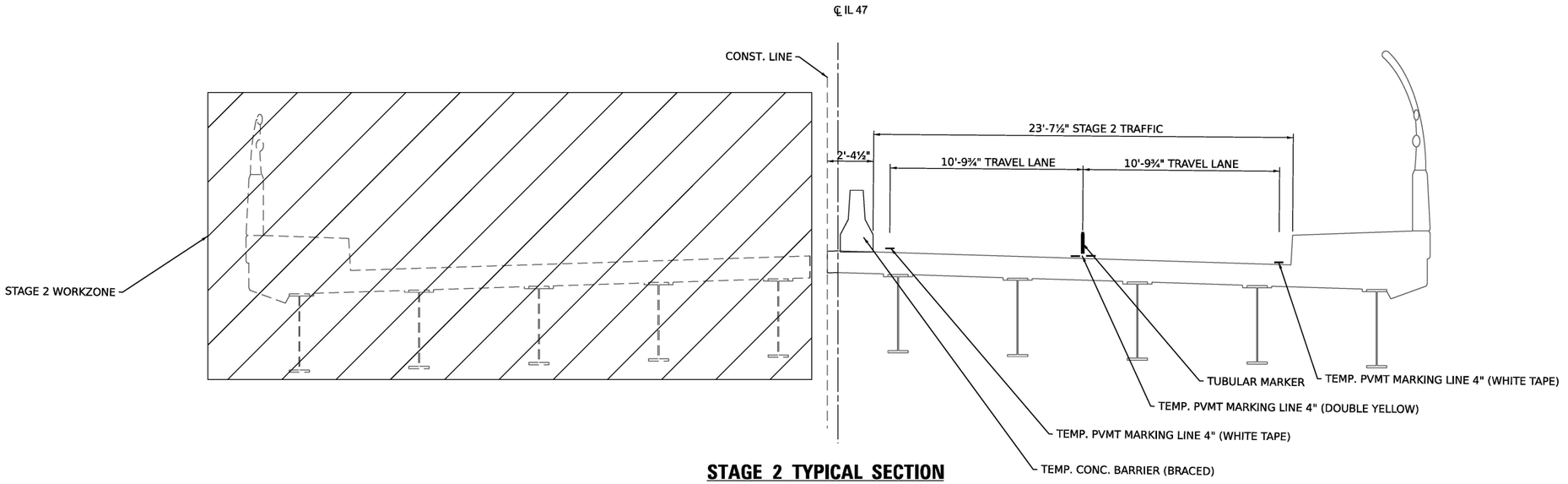

STAGE 2 TYPICAL SECTION (SN 032-0086 /0087)

(LOOKING NORTH)

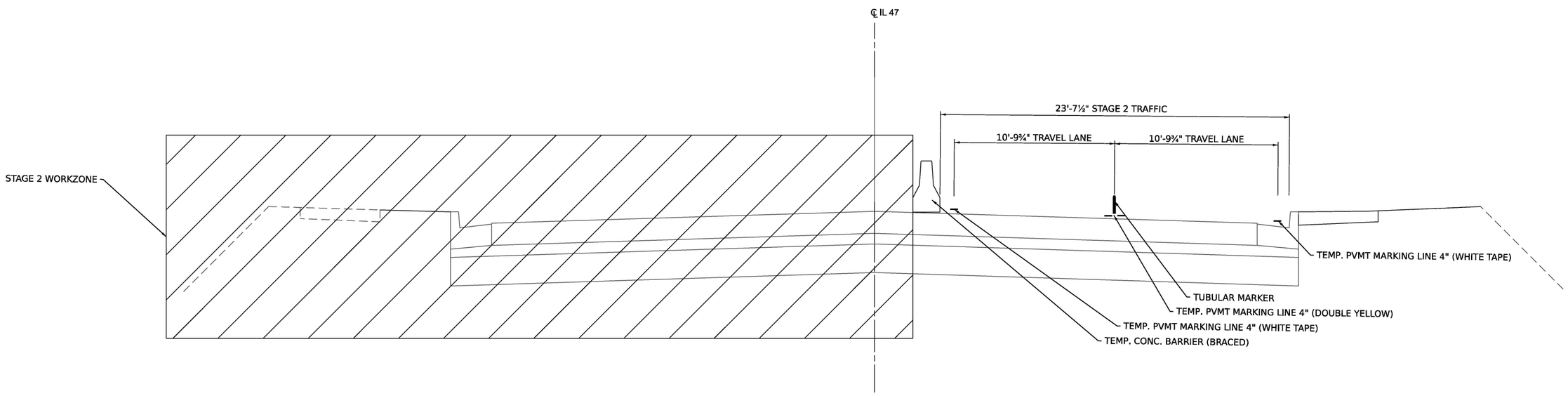

NOTES:

1. TYPE III BARRICADES SHALL NOT BE UTILIZED AT ANY STAGED CONSTRUCTION.

STAGE 2 TYPICAL SECTION (ROADWAY)

(LOOKING NORTH)

MODEL: Untitled-4 [Sheet]
FILE NAME: H:\P2240055 - D3 V-V PTB 211-23\2240055.001 - IL 47 over CSX RR and Buchanan CN 66M30\CADD\Microstation\CADD Drawings\D366M30-sht-typicals.dgn

OATES ASSOCIATES
www.oatesassociates.com
ILLINOIS DESIGN FIRM LICENSE NO.: 184.001115

USER NAME = ryne.wirtjes	DESIGNED -	REVISED -
	DRAWN -	REVISED -
	CHECKED -	REVISED -
PLOT DATE = 5/21/2026	DATE -	REVISED -

STATE OF ILLINOIS
DEPARTMENT OF TRANSPORTATION

STAGE 2 TYPICAL SECTIONS
TRAFFIC CONTROL PLAN

SCALE: | SHEET 8 OF 14 SHEETS | STA. | TO STA.

F.A.P RTE.	SECTION	COUNTY	TOTAL SHEETS	SHEET NO.
326	((111)HB1,HVB1)ES	GRUNDY	137	31
		CONTRACT NO. 66M30		
	ILLINOIS FED. AID PROJECT			

NOTES:

SEE HWY STD 701611-01 FOR ADDITIONAL SIGNING REQUIREMENTS LEADING TO LANE CLOSURE.

ALL STATION CALLOUTS FOR TEMPORARY CONCRETE BARRIER ARE TO TRAFFIC SIDE.

THIS STAGE INCLUDES RECONSTRUCTION OF THE EAST SIDE OF THE BRIDGE AND ROAD.

BIDIRECTIONAL TURN LANE OPEN FOR LEFT TURNS TO ENTRANCES, SIDE STREETS, AND RESIDENTAL ACCESS.

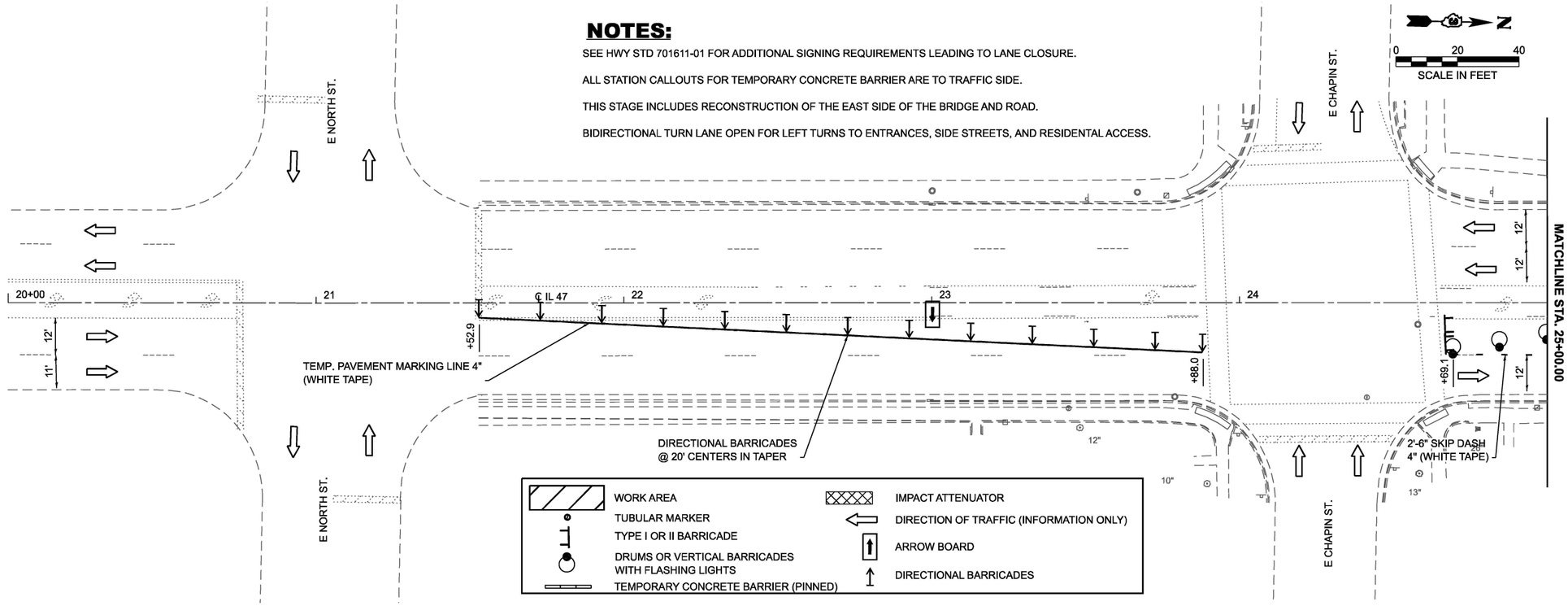

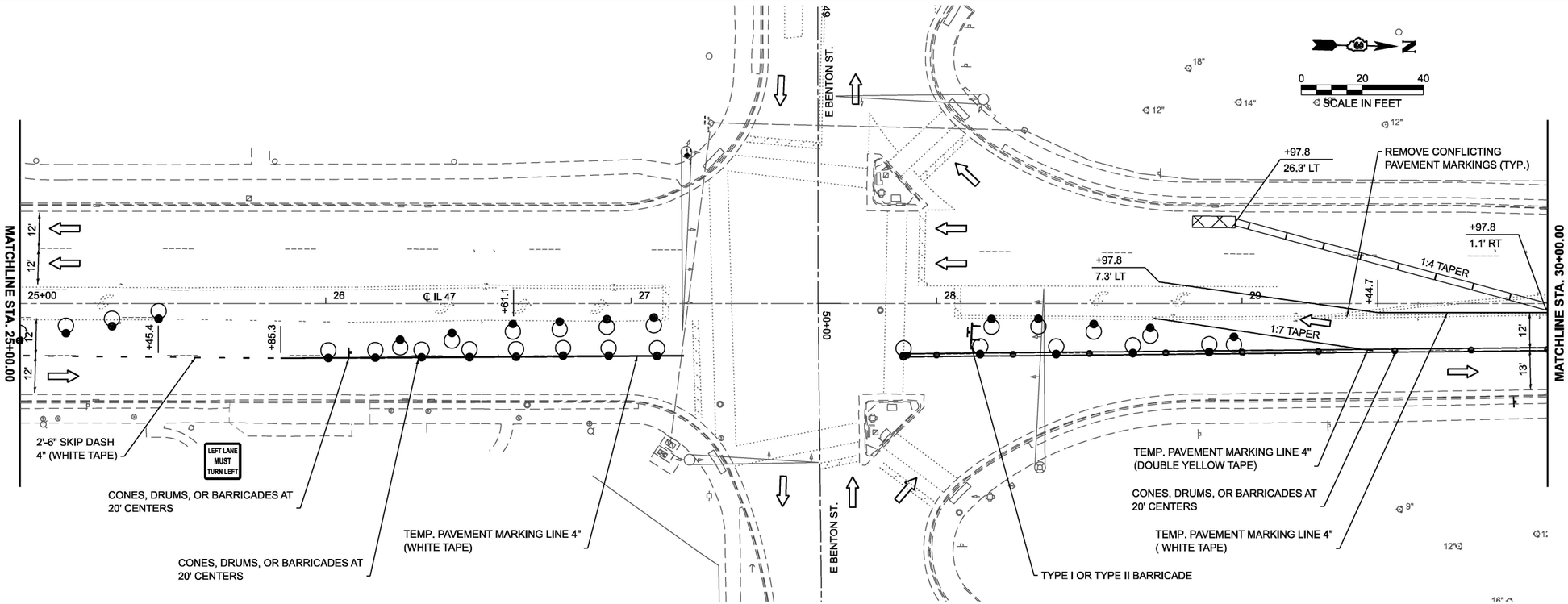

MODEL: ExCL - Plan 1 [Sheet]
FILE NAME: H:\P\224055 - 03 V-V PTB 211-2\3224055.001 - IL 47 over CSX RR and Buchanan CN 66M30\CADD\Microstation\CADD Drawings\D366M30-sht-Stage2.dgn

OATES ASSOCIATES
www.oatesassociates.com
ILLINOIS DESIGN FIRM LICENSE NO.: 184.001115

USER NAME = drew.schonhardt	DESIGNED -	REVISED -	
	DRAWN -	REVISED -	
	CHECKED -	REVISED -	
PLOT DATE = 6/8/2026	DATE -	REVISED -	

STATE OF ILLINOIS
DEPARTMENT OF TRANSPORTATION

STAGE 2 PLAN SHEETS
TRAFFIC CONTROL PLAN

SCALE: | SHEET 9 OF 14 SHEETS | STA. | TO STA.

F.A.P RTE.	SECTION	COUNTY	TOTAL SHEETS	SHEET NO.
326	((111)HB1,HVB1)ES	GRUNDY	137	32
		CONTRACT NO. 66M30		
	ILLINOIS	FED. AID PROJECT		

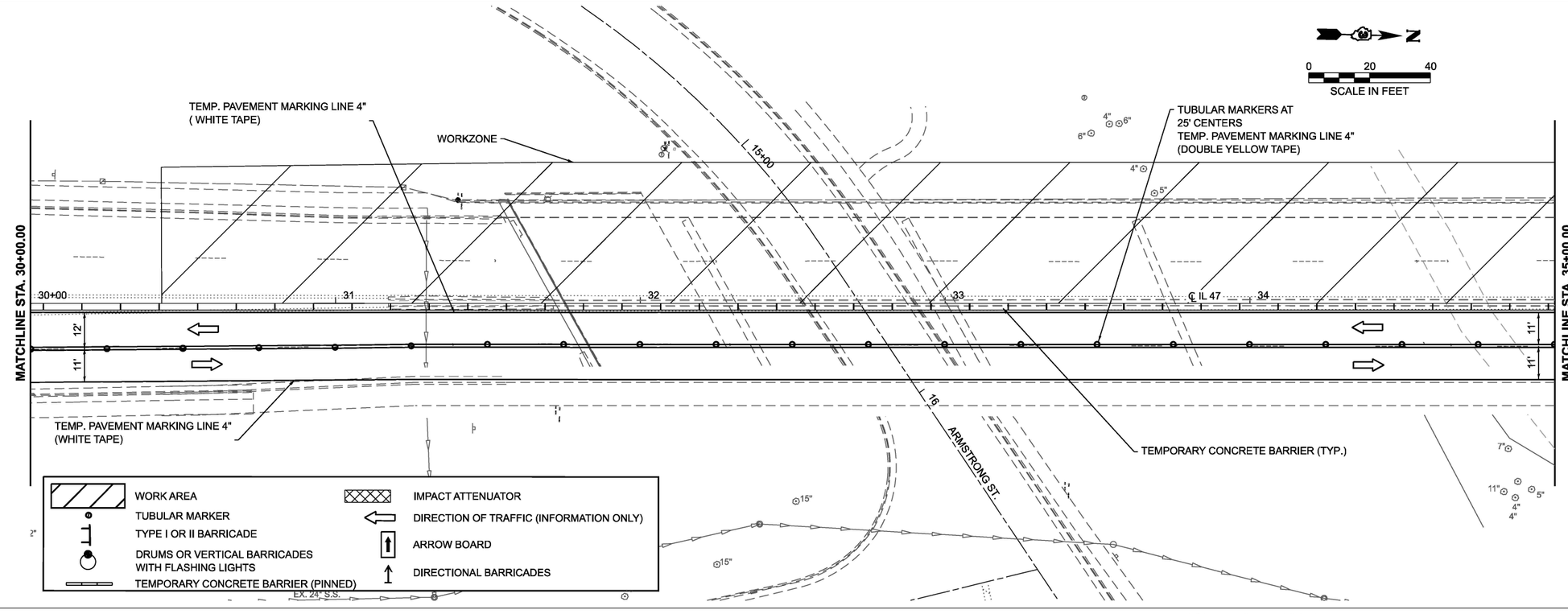

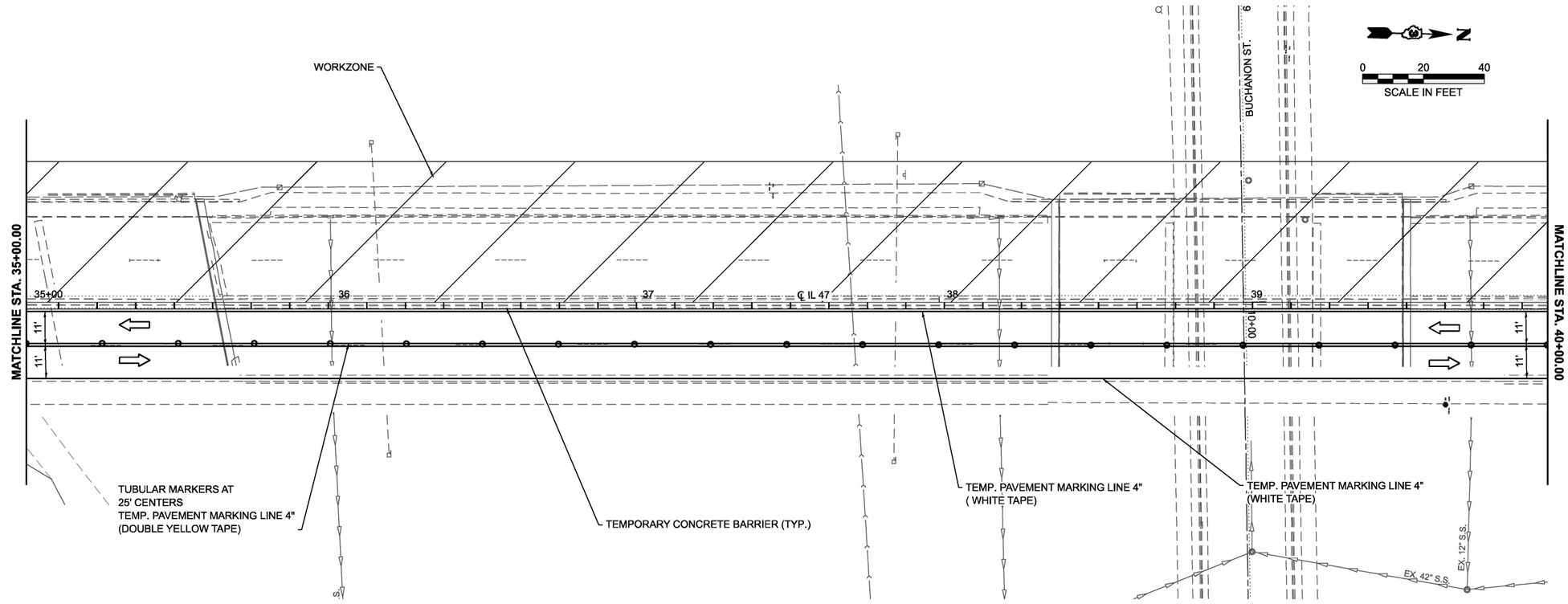

MODEL: ExCL - Plan 3 [Sheet]
FILE NAME: H:\P\224055 - D3 V-V PTB 211-23\224055.001 - IL 47 over CSX RR and Buchanan CN 66M30\CADD\Microstation\CADD Drawings\D366M30-sht-Stage2.dgn

OATES ASSOCIATES
www.oatesassociates.com
ILLINOIS DESIGN FIRM LICENSE NO.: 184.001115

USER NAME = drew.schonhardt	DESIGNED -	REVISED -
	DRAWN -	REVISED -
	CHECKED -	REVISED -
PLOT DATE = 6/8/2026	DATE -	REVISED -

STATE OF ILLINOIS
DEPARTMENT OF TRANSPORTATION

STAGE 2 PLAN SHEETS
TRAFFIC CONTROL PLAN

SCALE: | SHEET 10 OF 14 SHEETS | STA. | TO STA.

F.A.P RTE.	SECTION	COUNTY	TOTAL SHEETS	SHEET NO.
326	((111)HB1,HVB1)ES	GRUNDY	137	33
		CONTRACT NO. 66M30		
	ILLINOIS	FED. AID PROJECT		

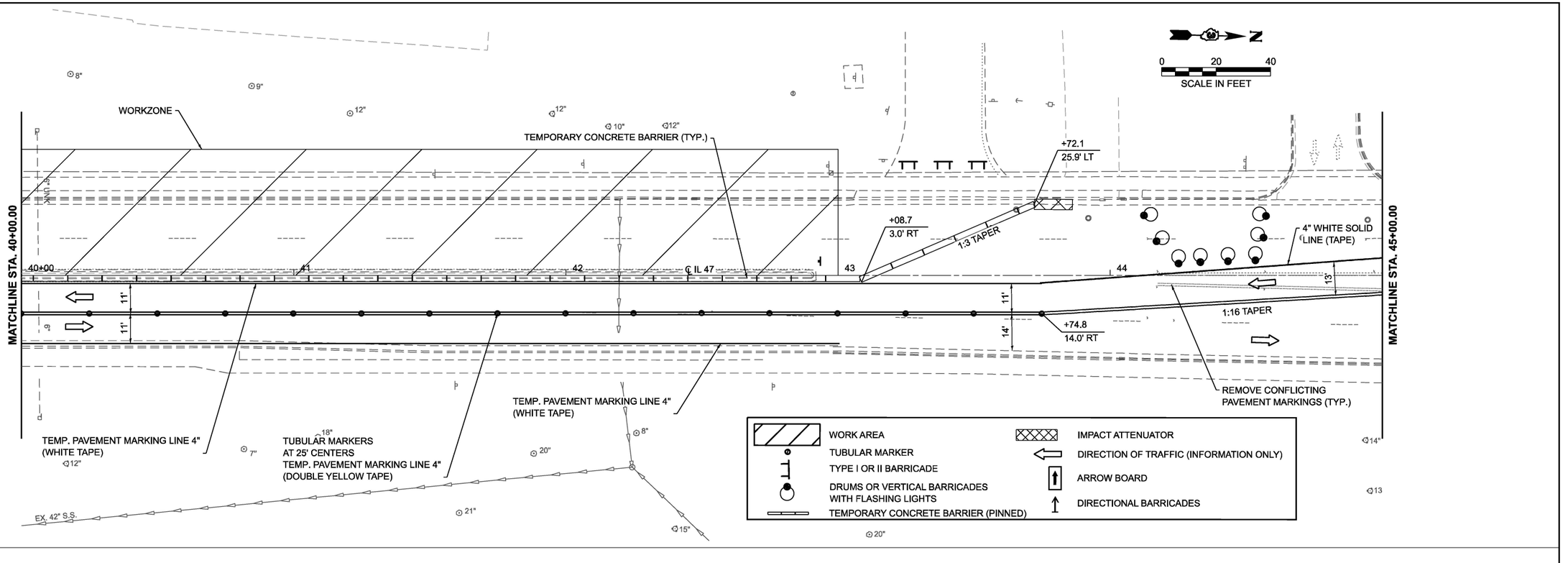

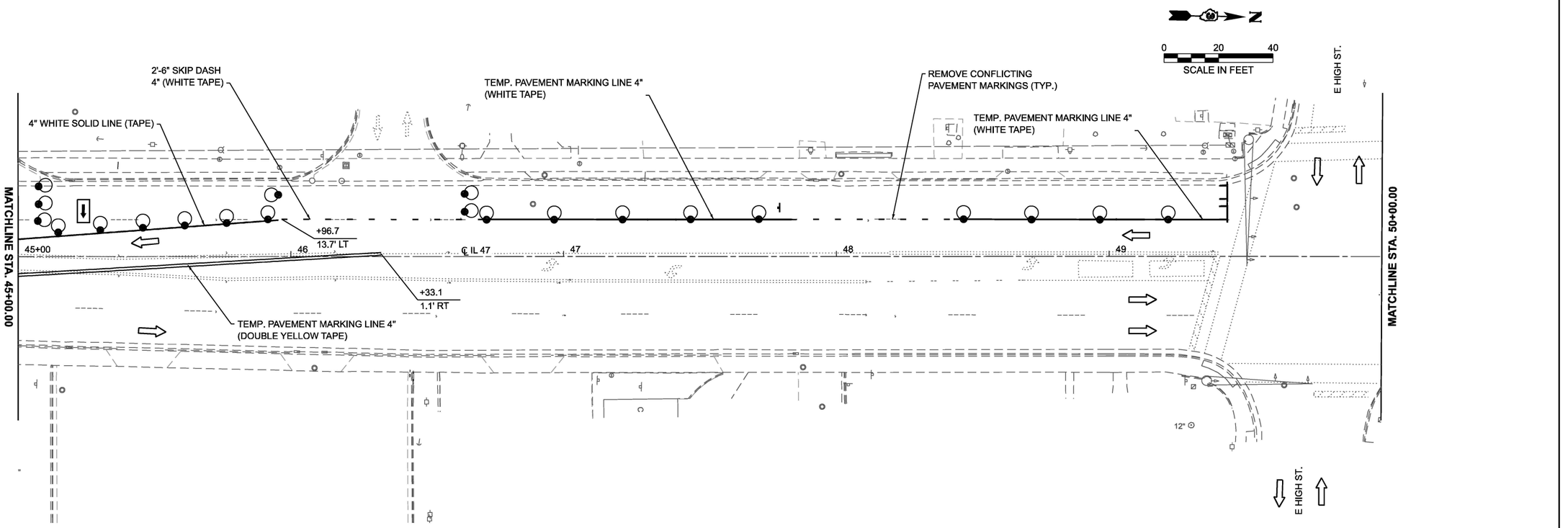

MODEL: ExCL - Plan 5 [Sheet]
FILE NAME: H:\P\224055 - D3 V-V PTB 211-23\224055.001 - IL 47 over CSX RR and Buchanan CN 66M30\CADD\Microstation\CADD Drawings\D366M30-sht-Stage2.dgn

OATES ASSOCIATES
www.oatesassociates.com
ILLINOIS DESIGN FIRM LICENSE NO.: 184.001115

USER NAME = kevin.botterbush	DESIGNED -	REVISED -	
	DRAWN -	REVISED -	
	CHECKED -	REVISED -	
PLOT DATE = 5/19/2026	DATE -	REVISED -	

STATE OF ILLINOIS
DEPARTMENT OF TRANSPORTATION

STAGE 2 PLAN SHEETS
TRAFFIC CONTROL PLAN

SCALE: | SHEET 11 OF 14 SHEETS | STA. | TO STA.

F.A.P RTE.	SECTION	COUNTY	TOTAL SHEETS	SHEET NO.
326	((111)HB1,HVB1)ES	GRUNDY	137	34
		CONTRACT NO. 66M30		
	ILLINOIS FED. AID PROJECT			

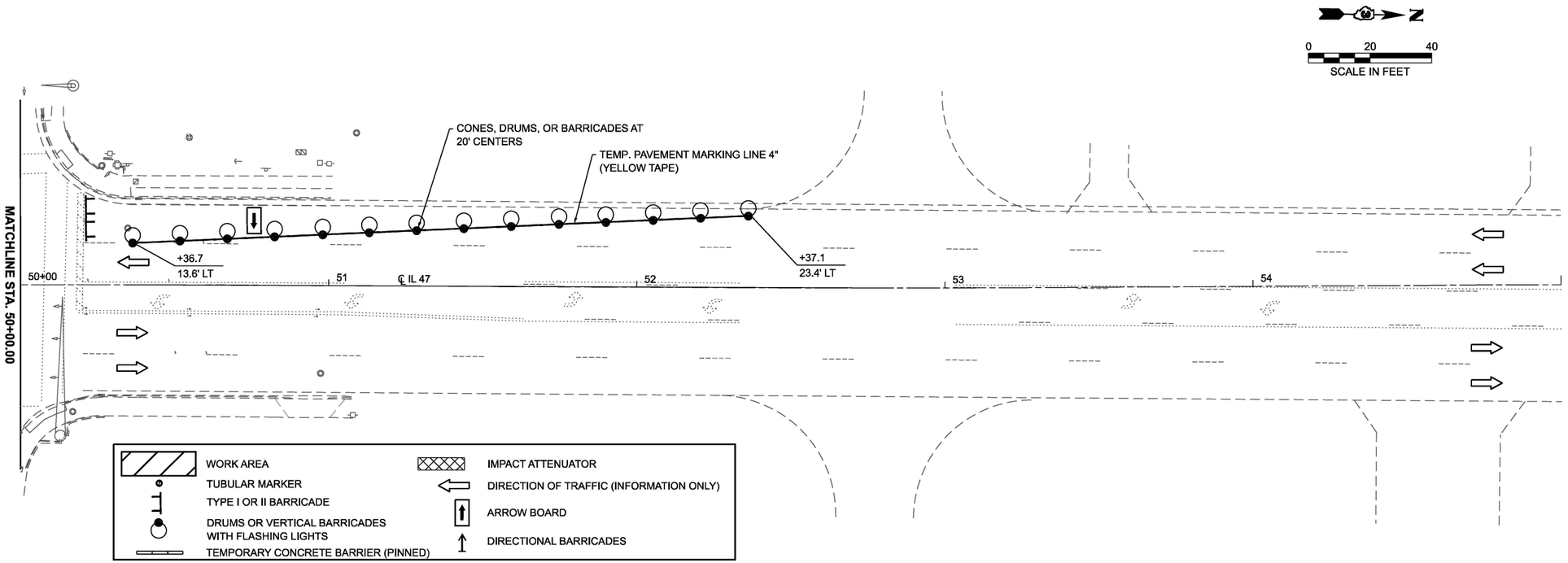

MODEL: ExCL - Plan 7 [Sheet]
FILE NAME: H:\P224055 - D3 V-V PTB 211-23\224055.001 - IL 47 over CSX RR and Buchanan CN 66M30\CADD\Microstation\CADD Drawings\D366M30-sht-Stage2.dgn

OATES ASSOCIATES
www.oatesassociates.com
ILLINOIS DESIGN FIRM LICENSE NO.: 184.001115

USER NAME = kevin.botterbush	DESIGNED -	REVISED -
	DRAWN -	REVISED -
	CHECKED -	REVISED -
PLOT DATE = 5/19/2026	DATE -	REVISED -

STATE OF ILLINOIS
DEPARTMENT OF TRANSPORTATION

STAGE 2 PLAN SHEETS
TRAFFIC CONTROL PLAN

SCALE: | SHEET 12 OF 14 SHEETS | STA. | TO STA.

F.A.P RTE.	SECTION	COUNTY	TOTAL SHEETS	SHEET NO.
326	((111)HB1,HVB1)ES	GRUNDY	137	35
		CONTRACT NO. 66M30		
	ILLINOIS	FED. AID PROJECT		

NOTES:
1. MAINTAIN ACCESS FOR EMERGENCY SERVICES.
2. DETOUR SHALL BE USED DURING BEAM OPERATIONS.
3. THE DETOUR AHEAD AND ROAD CONSTRUCTION SIGNS ARE TO BE 48" X 48".
4. ORANGE CONSTRUCTION SIGNS TO BE FLOURESCENT ORANGE.

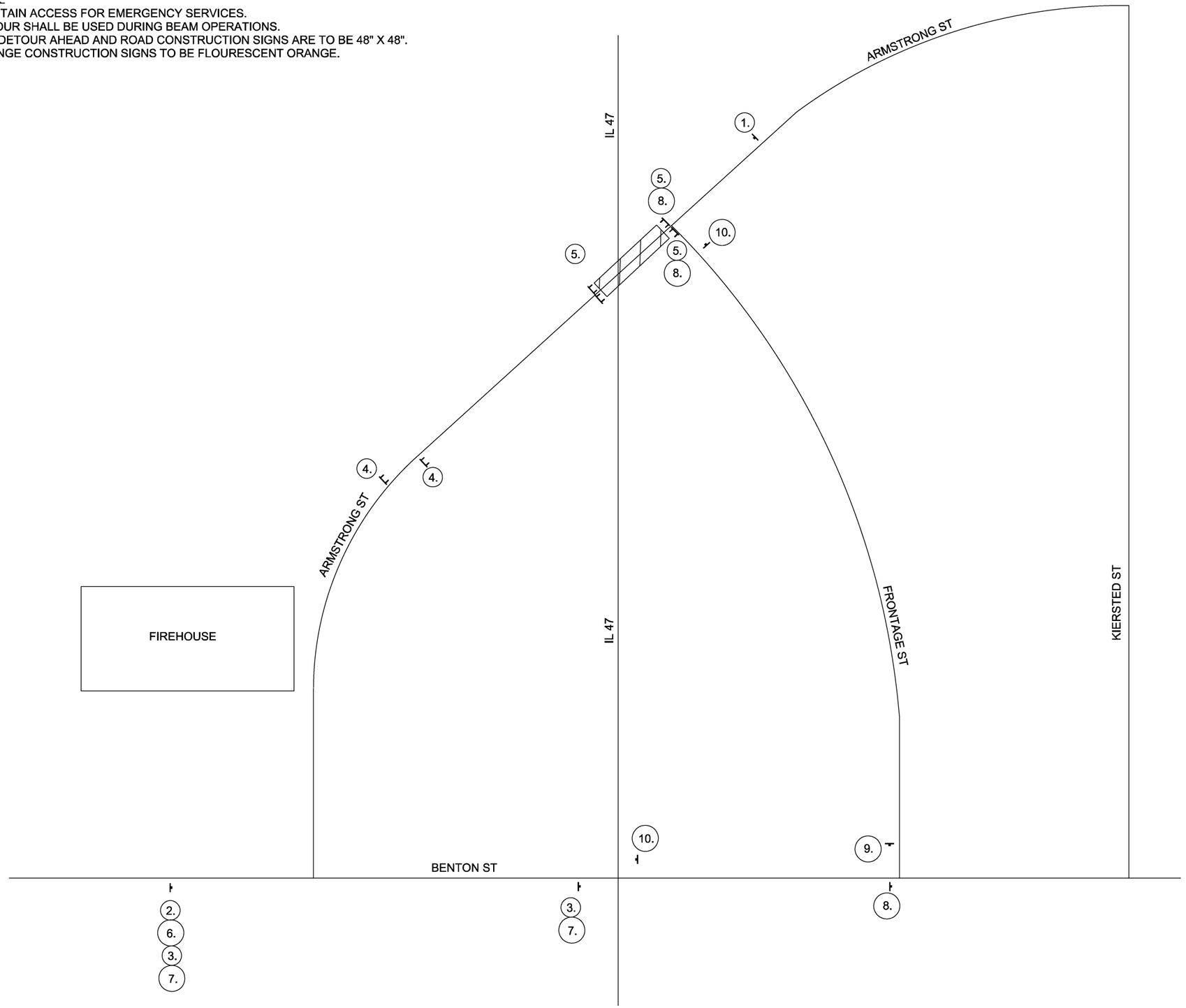

N

LEGEND

1.	DETOUR AHEAD	W20-2 48x48
2.	ROAD CLOSED AHEAD	W20-3 48x48
3.	DETOUR	M4-8 24x12
4.	ROAD CLOSED TO THRU TRAFFIC	R11-4 60x30
5.	ROAD CLOSED	R11-2 48x30
6.		M5-1 21x15
7.		M6-3 21x15
8.	DETOUR	M4-9L 30x24
9.	DETOUR	M4-9R 30x24
10.	END DETOUR	M4-8A 24x18

TYPE 3 BARRICADE

WORKZONE

SIGN

MODEL: Untitled [Sheet]
FILE NAME: H:\P2244055 - D3 V-V PTB 211-23\2244055.001 - IL 47 over CSX RR and Buchanan CN 66M30\CADD\Microstation\CADD Drawings\D366M30-sht-detour plan - Armstrong.dgn

OATES ASSOCIATES
www.oatesassociates.com
ILLINOIS DESIGN FIRM LICENSE NO.: 184.001115

USER NAME = kevin.botterbush	DESIGNED -	REVISED -	
	DRAWN -	REVISED -	
	CHECKED -	REVISED -	
PLOT DATE = 5/19/2026	DATE -	REVISED -	

STATE OF ILLINOIS
DEPARTMENT OF TRANSPORTATION

ARMSTRONG ST. DETOUR PLAN
TRAFFIC CONTROL PLAN

SCALE: | SHEET 13 OF 14 SHEETS | STA. | TO STA.

F.A.P RTE.	SECTION	COUNTY	TOTAL SHEETS	SHEET NO.
326	((111)HB1,HVB1)ES	GRUNDY	137	36
		CONTRACT NO. 66M30		
	ILLINOIS FED. AID PROJECT			

NOTES:
1. MAINTAIN ACCESS FOR EMERGENCY SERVICES.
2. DETOUR SHALL BE USED DURING BEAM OPERATIONS.
3. THE DETOUR AHEAD AND ROAD CONSTRUCTION SIGNS ARE TO BE 48" X 48".
4. ORANGE CONSTRUCTION SIGNS TO BE FLUORESCENT ORANGE.

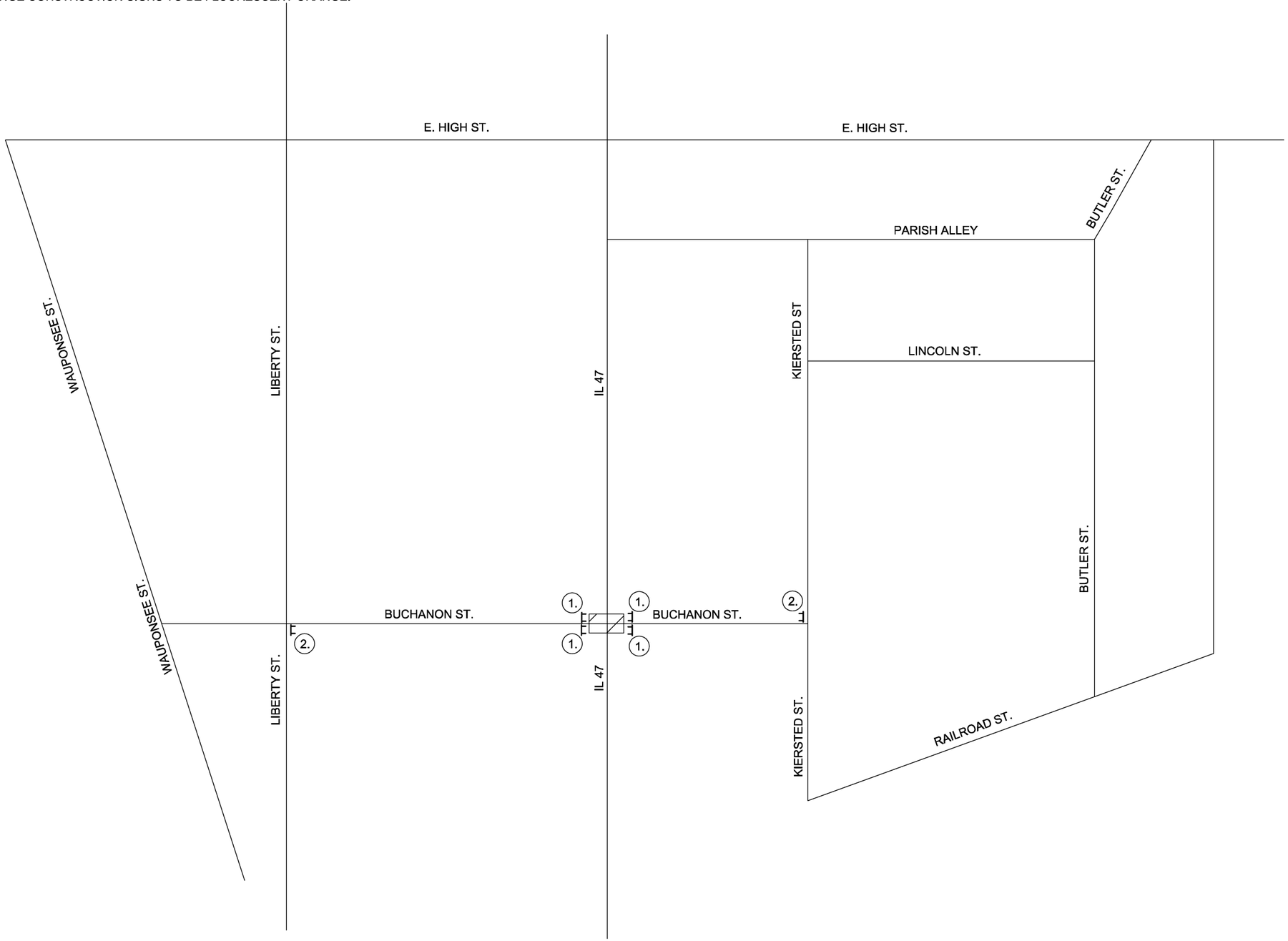

LEGEND

1. ROAD CLOSED AHEAD — W20-3 48x48
2. ROAD CLOSED TO THRU TRAFFIC — R11-4 60x30

SIGN — TYPE 3 BARRICADE

WORKZONE

MODEL: Untitled [Sheet]
FILE NAME: H:\P2224055 - D3 V-V PTB 211-23\2224055.001 - IL 47 over CSX RR and Buchanan CN 66M30\CADD\Microstation\CADD Drawings\D366M30-sht-detour plan - Buchanon.dgn

OATES ASSOCIATES
www.oatesassociates.com
ILLINOIS DESIGN FIRM LICENSE NO.: 184.001115

USER NAME = ryne.wirtjes	DESIGNED -	REVISED -	
	DRAWN -	REVISED -	
	CHECKED -	REVISED -	
PLOT DATE = 5/21/2026	DATE -	REVISED -	

STATE OF ILLINOIS
DEPARTMENT OF TRANSPORTATION

BUCHANAN ST. TEMPORARY CLOSURE
TRAFFIC CONTROL PLAN

SCALE: | SHEET 14 OF 14 SHEETS | STA. | TO STA.

F.A.P RTE.	SECTION	COUNTY	TOTAL SHEETS	SHEET NO.
326	((111)HB1,HVB1)ES	GRUNDY	137	37
		CONTRACT NO. 66M30		
	ILLINOIS FED. AID PROJECT			

NOTES:

1. UPON COMPLETION OF CONSTRUCTION, ALL PAVEMENT MARKINGS OUTSIDE OF PROJECT LIMITS SHALL BE STRIPED TO PRE-CONSTRUCTION CONDITIONS.
2. PREFORMED PLASTIC PAVEMENT MARKING, TYPE D - STANDARD - LINE SHALL BE CONSIDERED AS "CONTRAST PAVEMENT MARKING (6 INCH WHITE LINE WITH 1⅓ INCH BLACK BORDER)".
3. GROOVING FOR RECESSED PAVEMENT MARKING 10 INCH SHALL BE USED WITH THIS WORK.

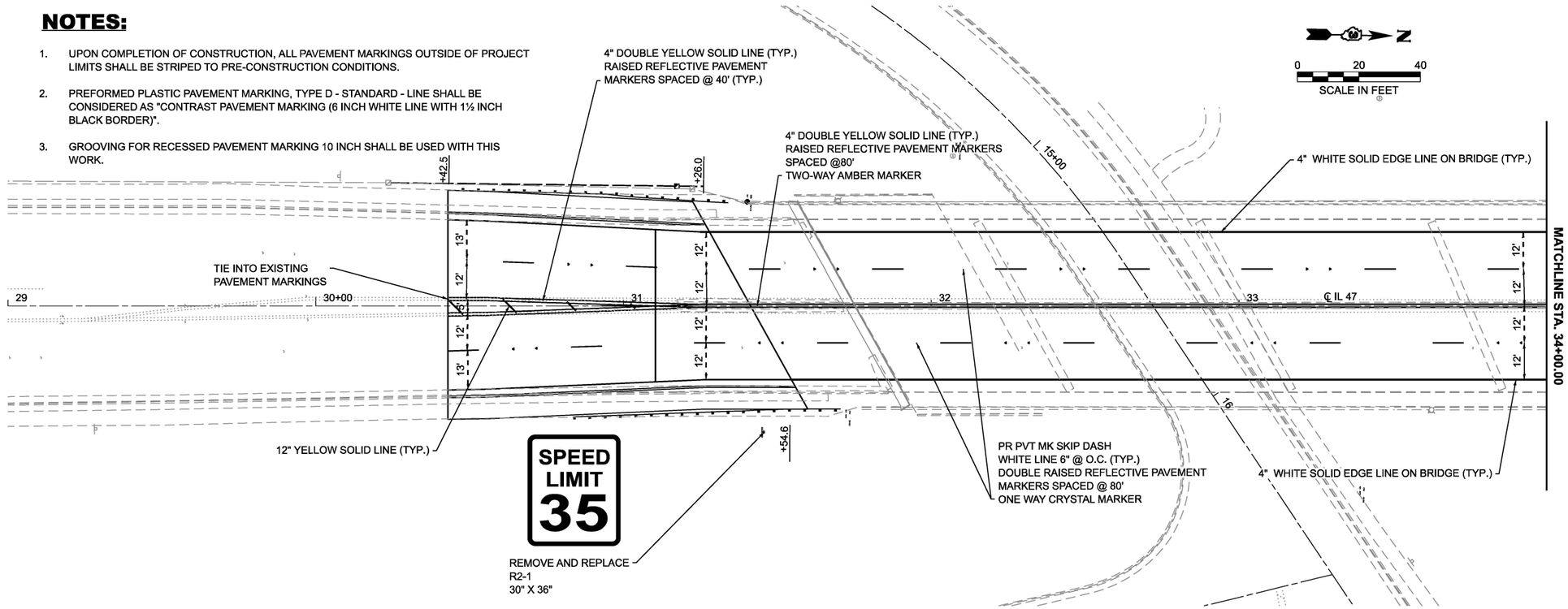

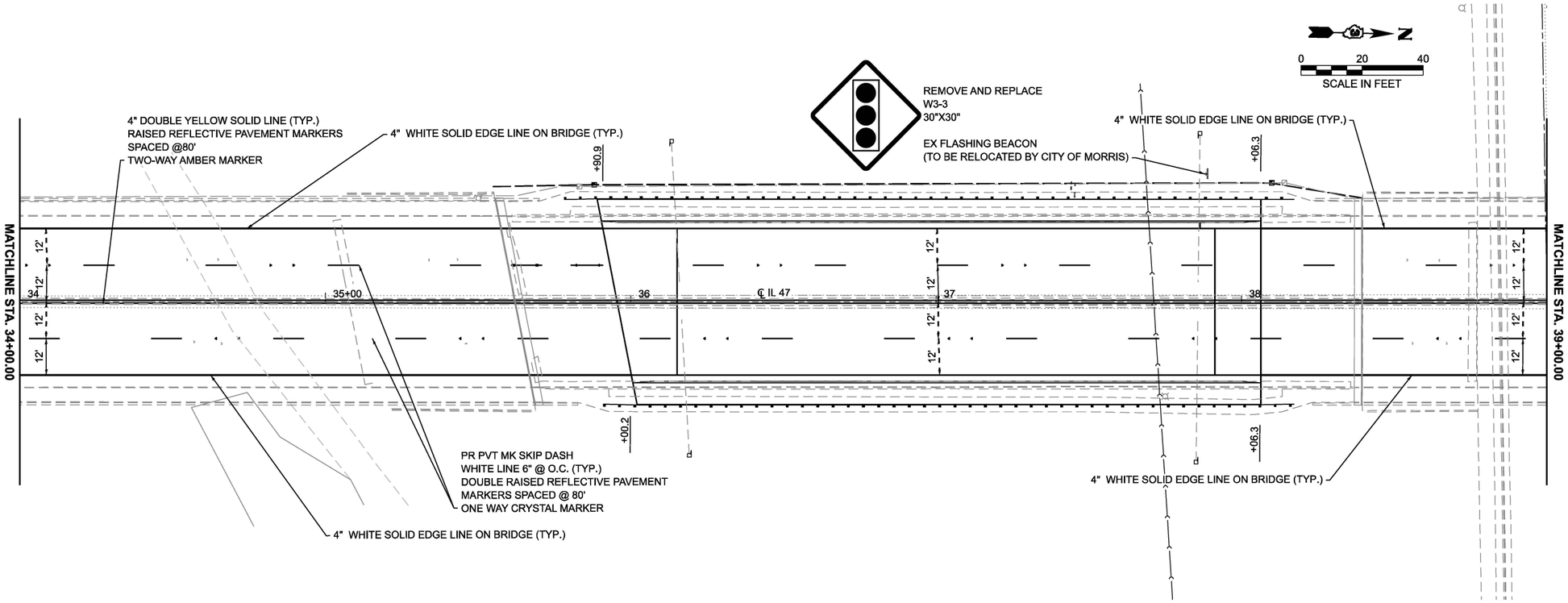

MODEL: pmk - Plan 1 [Sheet]
FILE NAME: H:\P\224055 - D3 V-V PTB 211-2\224055.001 - IL 47 over CSX RR and Buchanan CN 66M30\CADD\Microstation\CADD Drawings\D966M30-sht-pmk.dgn

OATES ASSOCIATES
www.oatesassociates.com
ILLINOIS DESIGN FIRM LICENSE NO.: 184.001115

USER NAME = ryne.wirtjes	DESIGNED -	REVISED -
	DRAWN -	REVISED -
	CHECKED -	REVISED -
PLOT DATE = 5/21/2026	DATE -	REVISED -

STATE OF ILLINOIS
DEPARTMENT OF TRANSPORTATION

PAVEMENT MARKING AND SIGNAGE SHEETS

SCALE: | SHEET 1 OF 2 SHEETS | STA. | TO STA.

F.A.P RTE.	SECTION	COUNTY	TOTAL SHEETS	SHEET NO.
326	((111)HB1,HVB1)ES	GRUNDY	137	38
		CONTRACT NO. 66M30		
	ILLINOIS	FED. AID PROJECT		

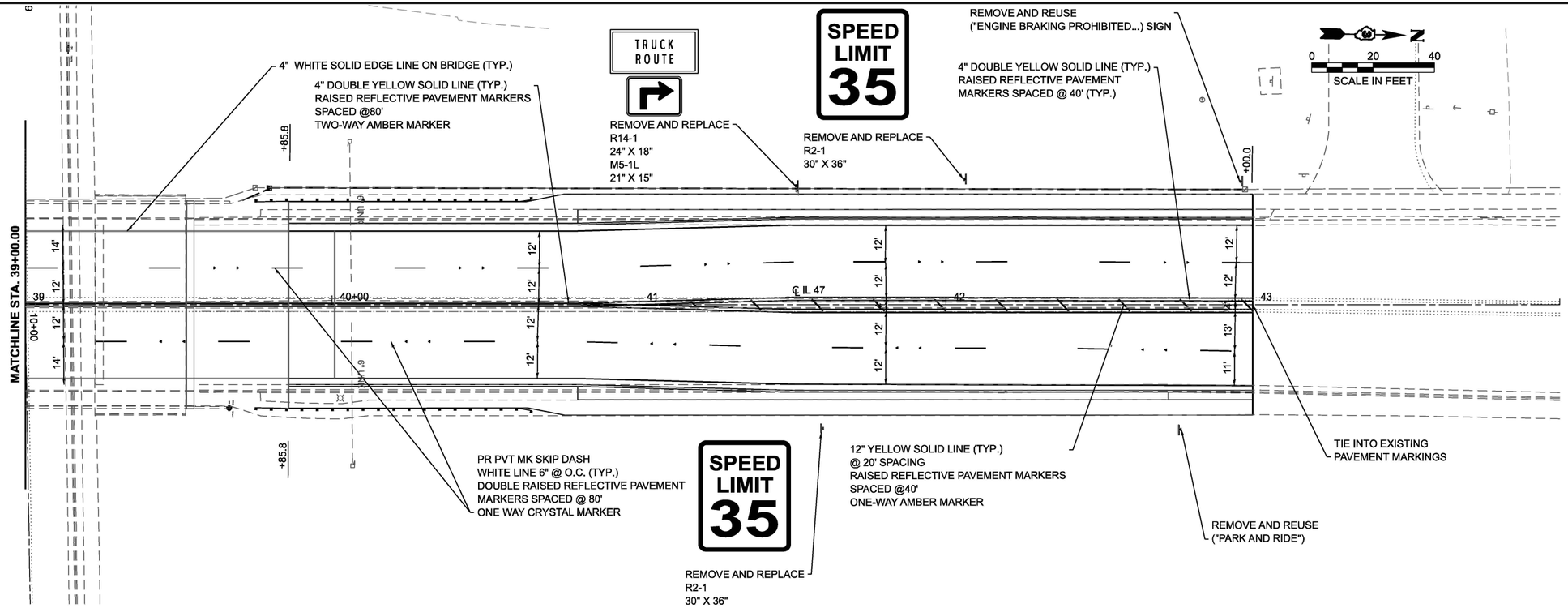

MODEL: pmk - Plan 3 [Sheet]
FILE NAME: I:\P224055 - D3 V-V PTB 211-23\224055.001 - IL 47 over CSX RR and Buchanan CN 66M30\CADD\Microstation\CADD Drawings\D366M30-sht-pmk.dgn

OATES ASSOCIATES
www.oatesassociates.com
ILLINOIS DESIGN FIRM LICENSE NO.: 184.001115

USER NAME = kevin.botterbush	DESIGNED -	REVISED -
	DRAWN -	REVISED -
	CHECKED -	REVISED -
PLOT DATE = 5/19/2026	DATE -	REVISED -

STATE OF ILLINOIS
DEPARTMENT OF TRANSPORTATION

PAVEMENT MARKING AND SIGNAGE SHEETS

SCALE: | SHEET 2 OF 2 SHEETS | STA. | TO STA.

F.A.P RTE.	SECTION	COUNTY	TOTAL SHEETS	SHEET NO.
326	((111)HB1,HVB1)ES	GRUNDY	137	39
		CONTRACT NO. 66M30		
	ILLINOIS FED. AID PROJECT			

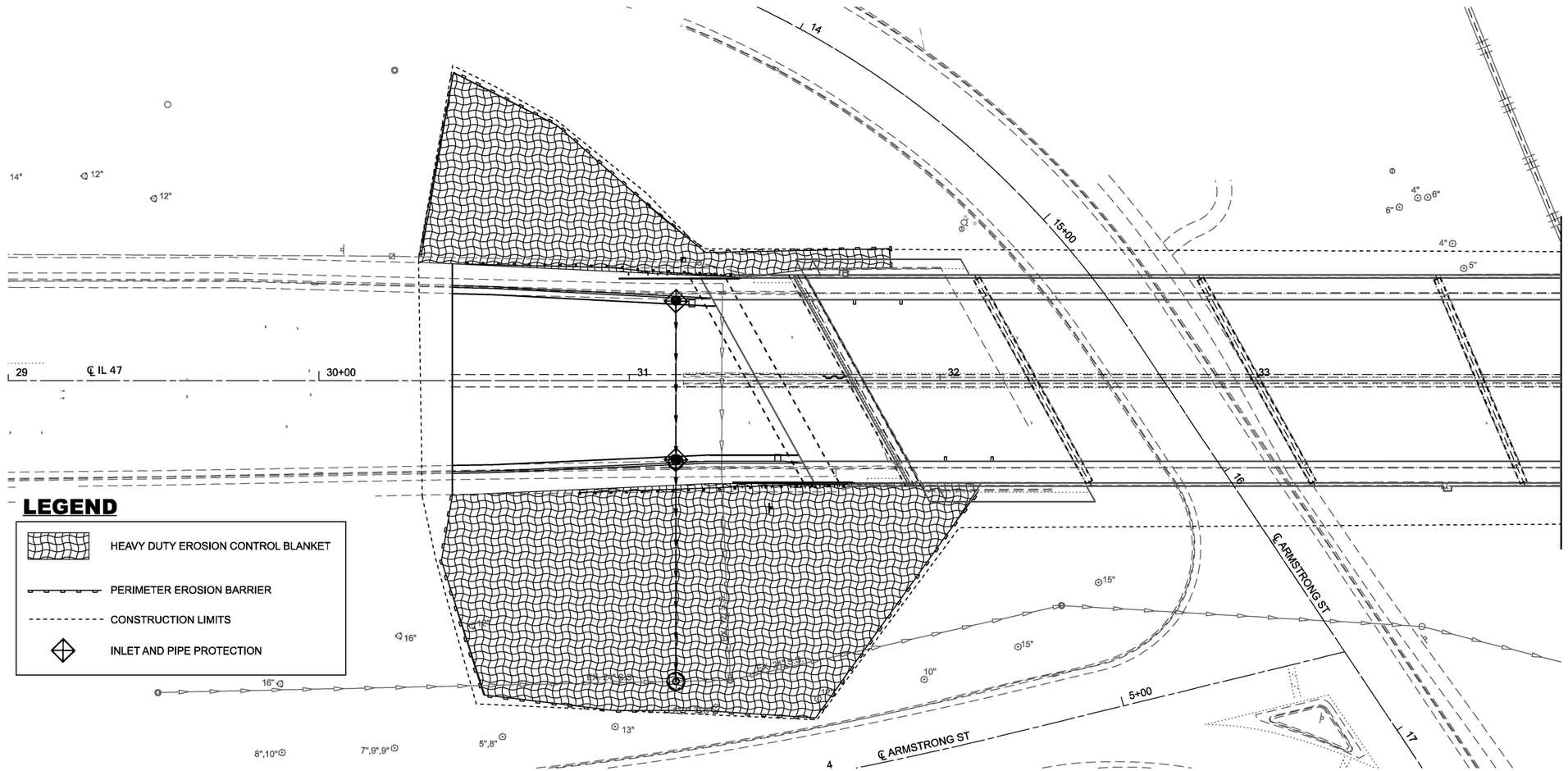

MODEL: IL 47 Removals - Plan 1 [Sheet]
FILE NAME: H:\P224055 - D3 VJ PTB 211-23\224055.001 - IL 47 over CSX RR and Buchanan CN 66M30\CADD\Microstation\CADD Drawings\D366M30-sht-eros.dgn

OATES ASSOCIATES
www.oatesassociates.com
ILLINOIS DESIGN FIRM LICENSE NO.: 184.001115

USER NAME = drew.schonhardt	DESIGNED -	REVISED -	
	DRAWN -	REVISED -	
	CHECKED -	REVISED -	
PLOT DATE = 5/26/2026	DATE -	REVISED -	

STATE OF ILLINOIS
DEPARTMENT OF TRANSPORTATION

EROSION CONTROL SHEETS

SCALE: | SHEET 1 OF 2 SHEETS | STA. | TO STA.

F.A.P RTE.	SECTION	COUNTY	TOTAL SHEETS	SHEET NO.
326	((111)HB1,HVB1)ES	GRUNDY	137	40
		CONTRACT NO. 66M30		
	ILLINOIS FED. AID PROJECT			

MATCHLINE STA. 34+00.00

MATCHLINE STA. 39+00.00

℄ IL 47

℄ BUCHANON ST

34 | 35+00 | 36 | 37 | 38

0 20 40
SCALE IN FEET

MATCHLINE STA. 39+00.00

MATCHLINE STA. 34+00.00

℄ IL 47

℄ BUCHANON ST

39 | 40+00 | 41 | 42 | 43

0 20 40
SCALE IN FEET

LEGEND

- HEAVY DUTY EROSION CONTROL BLANKET
- PERIMETER EROSION BARRIER
- CONSTRUCTION LIMITS
- INLET AND PIPE PROTECTION

MODEL: IL 47 Removals - Plan 2 [Sheet]
FILE NAME: H:\P224055 - D3 V-V PTB 211-23\224055.001 - IL 47 over CSX RR and Buchanan CN 66M30\CADD\Microstation\CADD Drawings\D366M30-sht-eros.dgn

OATES ASSOCIATES
www.oatesassociates.com
ILLINOIS DESIGN FIRM LICENSE NO.: 184.001115

USER NAME = ryne.wirtjes	DESIGNED -	REVISED -	
	DRAWN -	REVISED -	
	CHECKED -	REVISED -	
PLOT DATE = 4/22/2026	DATE -	REVISED -	

STATE OF ILLINOIS
DEPARTMENT OF TRANSPORTATION

EROSION CONTROL SHEETS

SCALE: | SHEET 2 OF 2 SHEETS | STA. | TO STA.

F.A.P RTE.	SECTION	COUNTY	TOTAL SHEETS	SHEET NO.
326	((111)HB1,HVB1)ES	GRUNDY	137	41
		CONTRACT NO. 66M30		
		ILLINOIS	FED. AID PROJECT	

DOCUMENT NO. _____ SLOT _____ FILE _____ SLIDE NO. _____

S.E. 1/4 OF SEC. 4, T.33N., R.7E. OF THE 3RD P.M.

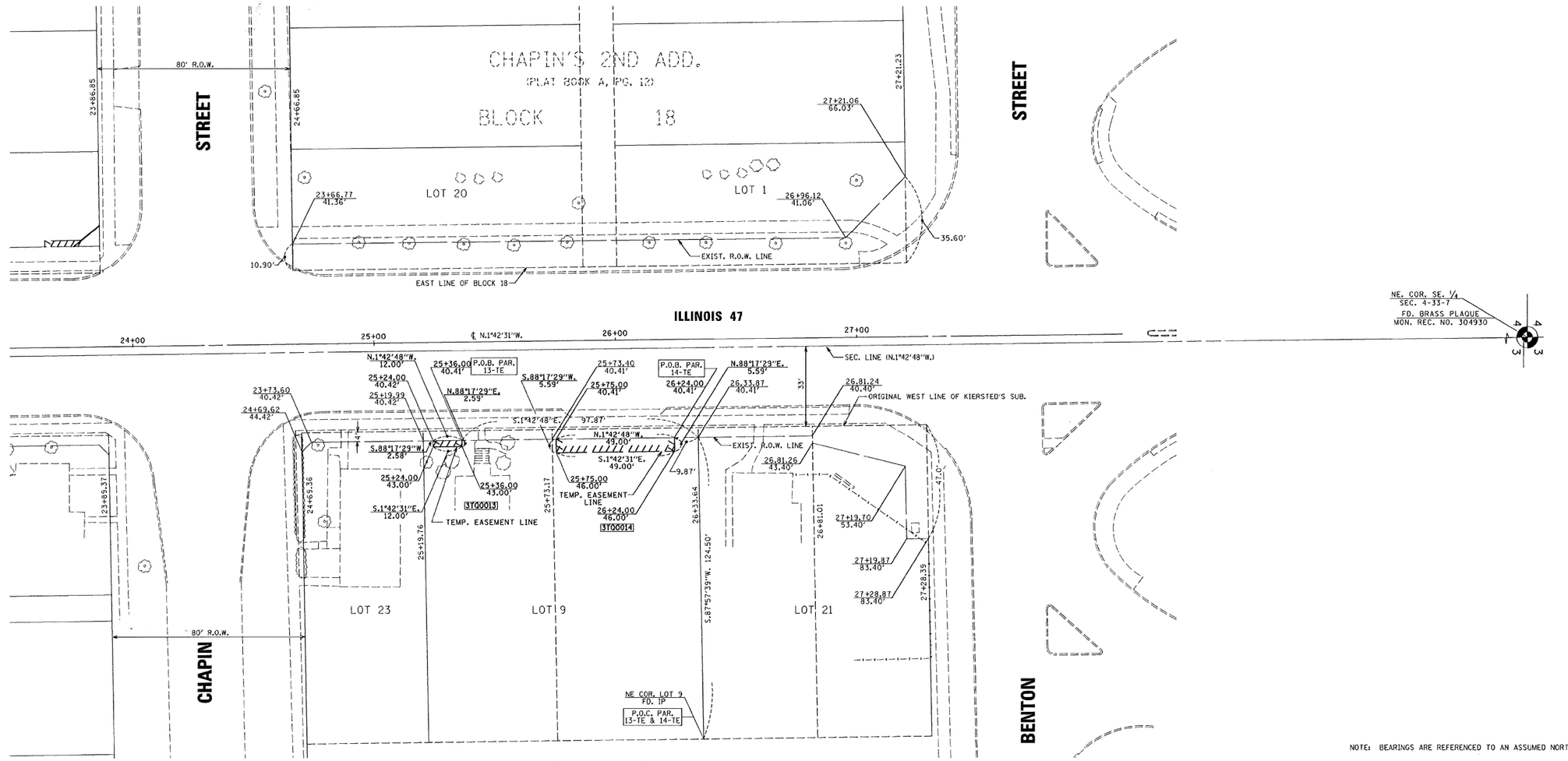

NOTE: BEARINGS ARE REFERENCED TO AN ASSUMED NORTH

SCALE 1" = 20'

0' 20' 50'

I VINCENT D. BRANDOW, HEREBY CERTIFY THAT I AM A PROFESSIONAL LAND SURVEYOR OF THE STATE OF ILLINOIS, THAT THE SURVEY OF PROPOSED F.A.S. 326 (IL. 47) WAS MADE BY RENWICK & ASSOCIATES, INC. UNDER MY DIRECTION, AND THAT THE SURVEY IS TRUE AND COMPLETE AS SHOWN TO THE BEST OF MY KNOWLEDGE AND BELIEF, THAT ALL MONUMENTS AND MARKS ARE OF THE CHARACTER AND OCCUPY THE POSITION SHOWN THEREON, AND ARE SUFFICIENT TO ENABLE THE SURVEY TO BE RETRACED. THIS PROFESSIONAL SERVICE CONFORMS TO THE CURRENT ILLINOIS MINIMUM STANDARDS FOR A BOUNDARY SURVEY.

DATE: 1-25-08

SURVEY BOOK NO. _____

Vincent D. Brandow
ILLINOIS PROFESSIONAL LAND SURVEYOR
NO. 2655

11-30-08
EXPIRATION DATE

VINCENT D. BRANDOW 35-2655 REGISTERED LAND SURVEYOR OF STATE OF ILLINOIS

PARCEL 3TQ0013

JOHN W. HEBERT II

TOTAL HOLDING = 6,650 Sq. Ft.±
TEMPORARY EASEMENT = 31 Sq. Ft.±
PURPOSE: SEWER CONSTRUCTION

PARCEL 3TQ0014

WILLIAM P. WISCH, et al.

TOTAL HOLDING = 7,529 Sq. Ft.±
TEMPORARY EASEMENT = 274 Sq. Ft.±
PURPOSE: DRIVEWAY RECONSTRUCTION

S.W. 1/4 OF SEC. 3, T.33N., R.7E. OF THE 3RD P.M.

RIGHT OF WAY PLANS

ROUTE	FAP 326 (IL. 47)
SECTION	(111CS)W&RS-2,1
PROJECT	
COUNTY	GRUNDY
JOB NUMBER	R-93-007-05
STATION	24+00 TO 27+50
SHEET	3 OF 3 SCALE 1" = 20'

MODEL: Untitled [Sheet]
FILE NAME: H:\P224055 - D3 V-V PTB 211-23\224055.001 - IL 47 over CSX RR and Buchanan CN 66M30\CADD\Microstation\CADD Drawings\D366M30-sht-ROW.dgn

OATES ASSOCIATES
www.oatesassociates.com
ILLINOIS DESIGN FIRM LICENSE NO.: 184.001115

USER NAME = kevin.botterbush	DESIGNED -	REVISED -	
	DRAWN -	REVISED -	
	CHECKED -	REVISED -	
PLOT DATE = 5/19/2026	DATE -	REVISED -	

STATE OF ILLINOIS
DEPARTMENT OF TRANSPORTATION

RIGHT OF WAY PLANS

SCALE: | SHEET 1 OF 3 SHEETS | STA. | TO STA.

F.A.P RTE.	SECTION	COUNTY	TOTAL SHEETS	SHEET NO.
326	((111)HB1,HVB1)ES	GRUNDY	137	42
		CONTRACT NO. 66M30		
	ILLINOIS FED. AID PROJECT			

CHAPIN'S SECOND ADDITION BLOCK 17 (RECORDED IN BOOK A, PAGE 12)

PARCEL NO.	OWNER	GENERAL DESCRIPTION	TOTAL	HOLDING	TOTAL R.O.W. REQ.D.		AREA IN EXIST. ROADWAY		NET R.O.W. REQ.D		REMAINDER	
			SQ. FT.	ACRES	SQ. FT.	ACRES	SQ. FT.	ACRES	SQ. FT.	ACRES	SQ. FT.	ACRES
87	MARY MUFFLER	E. 63' OF S 1/3 OF LOTS 22 & 23 EXCEPT E. 13' LOT 23	2,643	0.061	2,643	0.061	NONE	NONE	2,643	0.061	000	0.000
88	MARY GUSTA	S. 1/3 OF LOTS 22 & 23 EXCEPT E. 13' LOT 23	3,645	0.084	3,645	0.084	NONE	NONE	3,645	0.084	000	0.000
89	CHARLENE PETERSON	MID. 1/3 OF 22, 23, 24	6,286	0.144	6,286	0.144	NONE	NONE	6,286	0.144	000	0.000
90	CLIFFORD J. & RUTH BRANDT	N 1/3 OF 22, 23, 24 EXCEPT THE E. 13' OF LOT 23	5,695	0.131	5,695	0.131	NONE	NONE	5,695	0.131	000	0.000
103	CLIFFORD J. & RUTH BRANDT	LOT 5	6,713	0.154	6,713	0.154	NONE	NONE	6,713	0.154	000	0.000
91	LESLIE & EDNA OLSON	LOT 4	6,710	0.154	6,710	0.154	NONE	NONE	6,710	0.154	000	0.000
92	GEORGE P. STAMATES, TR#1	LOT 3	6,708	0.154	6,708	0.154	NONE	NONE	6,708	0.154	000	0.000
93	JOHN H. & THELMA J. CAMPBELL	LOT 1 & 2	13,336	0.306	13,336	0.306	NONE	NONE	13,336	0.306	000	0.000
		NAGLE'S ADDITION (RECORDED IN BOOK A-1, PAGE 76)										
94	ROBERT E. ENGER	LOT 1 EXCEPT E 60'	3,806	0.087	3,806	0.087	NONE	NONE	3,806	0.087	000	0.000
95	DONALD R. & ERNA J. HEXDALL	E 60' OF LOT 1	3,625	0.083	3,625	0.083	NONE	NONE	3,625	0.083	000	0.000
96	GLENN & LOIS HUTCHINGS	LOT 2 & S 5' OF LOT 3	8,045	0.185	8,045	0.185	NONE	NONE	8,045	0.185	000	0.000
97	ROBINA K. JOHNSON	N 55' OF LOT 3	6,815	0.156	6,815	0.156	NONE	NONE	6,815	0.156	000	0.000
98	MAURICE & BERNICE GROSS	LOT 4	7,430	0.171	7,430	0.171	NONE	NONE	7,430	0.171	000	0.000
99	BESSIE VANDEN	LOT 5	7,430	0.171	7,430	0.171	NONE	NONE	7,430	0.171	000	0.000
100	CRYER E. BRYANT	LOT 6	7,430	0.171	7,430	0.171	NONE	NONE	7,430	0.171	000	0.000
101	UNION NATIONAL BANK & TRUST CO. OF JOLIET, TRUSTEE TR# 796	LOT 7 & 8	17,597	0.404	17,597	0.404	NONE	NONE	17,597	0.404	000	0.000

ROSEMAN'S SUBDIVISION (RECORDED IN BOOK F, PAGE 336)

PARCEL NO.	OWNER	GENERAL DESCRIPTION	TOTAL	HOLDING	TOTAL R.O.W. REQ.D.		AREA IN EXIST. ROADWAY		NET R.O.W. REQ'D.		REMAINDER	
			SQ. FT.	ACRES	SQ. FT.	ACRES	SQ. FT.	ACRES	SQ. FT.	ACRES	SQ. FT.	ACRES
108	LEONARD J. & ELEANOR T. URBANSKI	N 1/2 OF E. 64' (EXC. S 40') & N 150' OF LOT 1 (EXC. 5 1/2 DONNELLY STREET)	22,491	0.516	22,491	0.516	4,851	0.111	17,640	0.405	000	0.000
107	HELEN M. CHESHAREK	S 59°10" W 239.66' & LOT 2 S 37° OF N 137' OF LOT 1	9,027	0.207	9,027	0.207	1,947	0.045	7,080	0.163	000	0.000
106	ERWIN & MARIAN KETTELSON	N 51° OF S 201' OF LOT 1	5,049	0.116	5,049	0.116	1,683	0.039	3,366	0.077	000	0.000
105	CYRUS & MARGARET HELGESON	PART OF LOT 1 & S 1/2 OF E 54' OF LOT 2	13,460	0.309	13,460	0.309	1,591	0.037	11,869	0.272	000	0.000
		ASSESSOR'S SUBDIVISION (RECORDED IN BOOK C, PAGE 44)										
109	M.K.C. LEASING CO, INC.	PART OF LOT 16	29,963	0.688	29,963	0.688	NONE	NONE	29,963	0.688	000	0.000
		TURNER'S ADDITION (RECORDED IN BOOK A-1, PAGE 63)										
114	MURIEL CURZON	LOT 5 - BLOCK 2	5,000	0.115	5,000	0.115	NONE	NONE	5,000	0.115	000	0.000
113	CHARLES & MARY ELLEN CARROL	LOT 6 - BLOCK 2 LOT 1 - BLOCK 3	5,480	0.126	5,480	0.126	NONE	NONE	5,480	0.126	000	0.000
112	LYDIA F. POPE	LOT 2 - BLOCK 3 & N. 74' LOT 3 - BLOCK 3	8,353	0.192	8,353	0.192	NONE	NONE	8,353	0.192	000	0.000
111	CARL & VERA WASSGREN	N 45' OF N 100' OF LOT 3	4,500	0.103	4,500	0.103	NONE	NONE	4,500	0.103	000	0.000
110	MARY & JOHN MINARICH	S 5' & E 20' OF LOT 3 & S 100' OF LOT 3 LOT 4 - BLOCK 3	10,680	0.245	10,680	0.245	NONE	NONE	10,680	0.245	000	0.000
115	EUGENE & BEVERLY KRAPF	(DESIGNED AS LOT) LAND	20,360	0.467	12,560	0.288	NONE	NONE	12,560	0.288	7,800	0.179
		HAMILTON'S 2ND SUBDIVISION (RECORDED IN BOOK "C", PAGE 33)										
102	EMIL A. JUNOD, ET UX	N 46' LOT 4, LOT 6	15,252	0.350	1,364	0.031	NONE	NONE	1,364	0.031	13,888	0.319

MORRIS TWP.
SEC. 4 - T. 33 N., R. 7 E., 3P.M.

MORRIS TWP.
SEC. 3 - T. 33 N., R. 7 E., 3P.M.

PARCEL NO. 104 PE.
CHICAGO, ROCK ISLAND & PACIFIC RAILROAD CO.
TRACT NO. 1 TOTAL PERMANENT EASEMENT AREA = 29,808 Sq. Ft. (0.684 Ac.)
AREA IN EXISTING ROADWAY = 9,885 Sq. Ft. (0.227 Ac.)
TRACT NO. 2 TOTAL PERMANENT EASEMENT AREA = 14,228 Sq. Ft. (0.326 Ac.)
AREA IN EXISTING ROADWAY = 7,354 Sq. Ft. (0.105 Ac.)

PARCEL NO. 161 T.E.
GLADYS S. ANDERSON, et al.
TEMP. EASEMENT AREA = .1161 SQ. FT. (0.027AC.)±
PURPOSE: RELOCATE DRIVEWAY ENTRANCE
NOTE: PARCEL NO. 86 CONVEYED BY QUITCLAIM DEED REC. AUG. 17, 1989 AS DOC NO. 89189

PARCEL NO. 102 TEMPORARY EASEMENT
= 0.0175 AC. 1506 SQ. FT. PURPOSE: BUILDING REMOVAL

Doc # 236967
DEC. 17, 1974
ROAD PLAT BOOK
PAGE 154

NOTE
ALL P.I.'S & P.O.T.'S MARKED W/"P.K." NAIL UNLESS OTHERWISE NOTED

PARCEL NO. 3EX0016 EXCESS LAND SOLD 11-17-86 RECORDED AS DOC. NO. 2865/9

PARCEL NO. 116
FIRST NATIONAL BANK OF MORRIS, TRUSTEE, TR. NO. 262
TOTAL HOLDING = 0.949 AC. (41,331 SQ. FT.)
TOTAL R.O.W. REQ'D. = 0.134 AC. (5815 SQ. FT.)
AREA IN EXISTING ROADWAY = NONE
NET R.O.W. REQ'D. = 0.134 AC. (5815 SQ. FT.)
REMAINDER = 0.815 AC. (35,516 SQ. FT.)

CERTIFICATE OF SURVEY
STA. OF ILLINOIS
LASALLE COUNTY
I, James Giordano, hereby certify that this plat of Public Highway Federal Aid Route 64 (Ill. 47) Section (111 CS) R, W&RS was prepared under my direction and that the survey is true and complete as shown.
Signed James J. Giordano
Registered Illinois Land Surveyor No. 1850
Dated JANUARY 2, 1975

JAMES J. GIORDANO REGISTERED LAND SURVEYOR

RIGHT OF WAY PLAT
STATE OF ILLINOIS
GRUNDY COUNTY
F.A. ROUTE 64 (ILL. 47)
SECTION (111CS) R, W & RS
AUGUST 1974
SCALE 1" = 40' PLAT NO. 3 OF 14
JOB NO. R-93-008-71

Rev. 3-26-88 DF Parcel 3EX0016 | Rev. 1-17-78 M Parcel #104 P.E. | Rev. 9/26/77 M Parcel #104-3 ELIMINATED | Rev. 4-21-76 PARCEL #75 V.M.N. | Rev. W.S. 1-30-76 PARCEL #111 Rev. W.S. 3-16-76(#102) | Revis. 5-14-75 AA (PARCEL # 108) Revis. 6-24-75 RJS (PARCEL #104 & #116) | Rev. 4-25-75 | Rev. W.S. 3-11-75 | Rev. 11-13-75 C.S. Par. #115 | MD

MODEL: Untitled-1 [Sheet]
FILE NAME: H:\P\224055 - D3 V-V PTB 211-213\224055.001 - IL 47 over CSX RR and Buchanan CN 66M30\CADD\Microstation\CADD Drawings\D366M30-sht-ROW.dgn

OATES ASSOCIATES
www.oatesassociates.com
ILLINOIS DESIGN FIRM LICENSE NO.: 184.001115

USER NAME = kevin.botterbush	DESIGNED -	REVISED -	
	DRAWN -	REVISED -	
	CHECKED -	REVISED -	
PLOT DATE = 5/19/2026	DATE -	REVISED -	

STATE OF ILLINOIS
DEPARTMENT OF TRANSPORTATION

RIGHT OF WAY PLANS

SCALE: | SHEET 2 OF 3 SHEETS | STA. | TO STA.

F.A.P RTE.	SECTION	COUNTY	TOTAL SHEETS	SHEET NO.
326	((111)HB1,HVB1)ES	GRUNDY	137	43
		CONTRACT NO. 66M30		
	ILLINOIS	FED. AID PROJECT		

RECORDED AS DOCUMENT NO. 236967, 12-17-74

C.H. GOOLD SUBDIVISION OF THE E. 2/3 OF LOT 15 OF ROSEMAN'S SUBD. (RECORDED IN BOOK C, Pg. 34)

PARCEL NO.	OWNER	GENERAL DESCRIPTION	TOTAL		HOLDING		TOTAL R.O.W. REQD.		AREA IN EXIST R/W		NET R.O.W. REQD		REMAINDER	
			SQ FT	ACRES	SQ FT.	ACRES	SQ FT.	ACRES	SQ FT.	ACRES	SQ FT	ACRES	SQ FT.	ACRES
113	LAWRENCE & NELLIE BRODERICK	LOTS 1,2	18,128	0.416	18,128	0.416	NONE	NONE	18,128	0.416	000	0.000		
117	KENNETH E. SERENO	LOTS 3,4	18,128	0.416	8,460	0.194	NONE	NONE	8,460	0.194	9,668	0.222		

ROSEMAN'S SUBDIVISION (RECORDED IN BOOK F Pg. 356)

PARCEL NO.	OWNER	GENERAL DESCRIPTION	TOTAL		HOLDING		TOTAL R.O.W. REQD.		AREA IN EXIST R/W		NET R.O.W. REQD		REMAINDER	
			SQ FT	ACRES	SQ FT.	ACRES	SQ FT.	ACRES	SQ FT.	ACRES	SQ FT	ACRES	SQ FT.	ACRES
122	JOHN KASZUBA	A PART OF LOT 16	19,419	0.446	2,363	0.054	NONE	NONE	2,363	0.054	17,056	0.392		
119	PETER & JANET ALFANO	A PART OF LOT 16	18,932	0.435	18,932	0.435	NONE	NONE	18,932	0.435	000	0.000		
121	KENNETH & JOAN SERENO	A PART OF LOT 16	34,443	0.791	6,745	0.155	NONE	NONE	6,745	0.155	27,698	0.636		

ROSEMAN'S RE-SUBDIVISION OF E. 1/2 OF LOT 17 OF ROSEMAN'S SUBD. (RECORDED IN BOOK P Pg. 264)

PARCEL NO.	OWNER	GENERAL DESCRIPTION	TOTAL		HOLDING		TOTAL R.O.W. REQD		AREA IN EXIST R/W		NET R.O.W. REQD.		REMAINDER	
			SQ FT	ACRES	SQ FT	ACRES	SQ FT	ACRES	SQ FT	ACRES	SQ FT	ACRES	SQ.FT.	ACRES
123	CLIFFORD & IRENE AMMONS	LOT 1 & LOT 10	14,716	0.338	1,361	0.031	NONE	NONE	1361	0.031	13,353	0.307		
124	ROBERT & MARCELLA HORRIE	S. 45' LOT 2, S45' LOT 9	12,042	0.276	841	0.019	NONE	NONE	841	0.019	11,201	0.257		
125	JEANETTE STUTZKI	LOT 3,5,4, 7,8,9 ETC. S45' OF 29	32,093	0.737	1,348	0.031	NONE	NONE	1,348	0.031	30,745	0.706		
126	MELVIN OLSON	LOT 5, LOT 6	14,714	0.338	551	0.013	NONE	NONE	551	0.013	14,163	0.325		

CUNNEA'S SUBDIVISION (RECORDED IN BOOK Z16 Pg 423)

PARCEL NO.	OWNER	GENERAL DESCRIPTION	TOTAL		HOLDING		TOTAL R.O.W. REQD		AREA IN EXIST R/W		NET R.O.W. REQD		REMAINDER	
			SQ FT	ACRES	SQ FT	ACRES	SQ FT	ACRES	SQ FT	ACRES	SQ FT	ACRES	SQ.FT.	ACRES
149	HARRY & VERNA BEHRENS	LOTS 1, 2	12,500	0.287	375	0.009	NONE	NONE	375	0.009	12,125	0.278		
134	BENNIE L. SKLUT	LOTS 46, 47	12,500	0.287	375	0.009	NONE	NONE	375	0.009	12,125	0.278		
150	BENNIE & ANN SKLUT	LOTS 48, 49	12,500	0.287	2340	0.054	NONE	NONE	2,340	0.054	10,160	0.233		
151	ROBERT & VIOLET WILLIAMSON & HEIRS AT LAW OF VERA J. SCHUMMACHER	LOT 50	6,250	0.143	6,750	0.143	NONE	NONE	6,250	0.143	000	0.000		

PARCEL NO. 117 TEMPORARY EASEMENT = 0.222 AC. (9,668 SQ. FT.)
PURPOSE: BUILDING REMOVAL

PARCEL NO. 122 TEMPORARY EASEMENT = 0.071 AC. (3,098 SQ. FT.)
PURPOSE: BUILDING REMOVAL

MORRIS TWP.
SEC. 4 — T. 33 N., R. 7 E., 3 P.M.

PARCEL NO. 129 TEMPORARY EASEMENT = 0.058 AC. (2520 SQ. FT.)
PURPOSE: BUILDING REMOVAL

PARCEL NO. 123 TEMPORARY EASEMENT = 0.037 AC. (1614 SQ. FT.)
PURPOSE: BUILDING REMOVAL

PARCEL NO. 3EX0020 EXCESS LAND SOLD 7-22-87, RECORDED AS DOC. NO. 290566 IN THE RECORDER'S OFFICE OF GRUNDY COUNTY.

PARCEL NO. 3EX0019 EXCESS LAND SOLD 7-22-87, RECORDED AS DOC. NO. 290557 IN THE RECORDER'S OFFICE OF GRUNDY COUNTY.

TEMP. EASEMENT = 0.017 Ac.± 751.6'
PURPOSE: TO GRADE TO PROPER SIDE SLOPE & CONSTRUCT DRIVEWAY ENTRANCE

NOTE PARCEL NO. 135 DEED DOES NOT HAVE ANY EXCEPTIONS

PARCEL 135 & 135 T.E.

PROPOSED IMPROVEMENT OF F.A. ROUTE 64 (ILL 47)

PROPOSED R.O.W. LINE

EXISTING R.O.W. LINE

SECTION LINE

DIVISION STREET

EAST HIGH STREET

LINCOLN STREET

McKINLEY STREET

SIGN POST LOCATED 0.25' OFF PROP. R.O.W. LINE

PARCEL NO. 150 TEMPORARY EASEMENT = 0.037 AC. (1593 SQ. FT.)
PURPOSE: BUILDING REMOVAL

AREA SOLD BY QUITCLAIM DEED RECORDED AS DOC. NUMBER 281990. JAN. 8, 1988

DETAIL "I"

MORRIS TWP.
SEC. 3 — T. 33 N., R. 7 E., 3 P.M.

ROSEMAN'S SUBDIVISION (RECORDED IN BOOK F Pg. 356)

PARCEL NO.	OWNER	GENERAL DESCRIPTION	TOTAL		HOLDING		TOTAL R.O.W. REQD		AREA IN EXIST R/W		NET R.O.W. REQD		REMAINDER	
			SQ FT	ACRES	SQ FT	ACRES	SQ FT	ACRES	SQ FT	ACRES	SQ FT	ACRES	SQ FT.	ACRES
131	HARRY & LILLIAN JOHNSON	A PART OF LOT 18	4,582	0.105	235	0.005	NONE	NONE	235	0.005	4,347	0.100		
132	DAVID & SHARON EDMUNDS	A PART OF LOT 18	4,582	0.105	378	0.002	NONE	NONE	378	0.002	4,504	0.103		
130	JAMES & MARY BAKER	A PART OF LOT 18	3,364	0.082	290	0.007	NONE	NONE	290	0.007	3,274	0.075		
127	MORRIS MOOSE LODGE #967	S 66' 6 1/2 LOT 18	20,002	0.459	2,867	0.066	2,200	0.051	667	0.015	17,135	0.393		
128	GRUNDY CO. NATIONAL BANK, TR. (TRUST # 319)	N 33' S. 150' E 270 LOT 18	25,375	0.583	4,041	0.093	3,101	0.071	940	0.022	21,334	0.490		
129	HELEN BUNTON	A PART OF LOT 18	12,725	0.292	5,944	0.136	2,800	0.064	3,144	0.072	6,785	0.156		
133	GRUNDY CO. NAT. BANK, TRUSTEE TR # 1358	A PART OF LOT 19	27,948	0.632	5,820	0.134	4,839	0.111	981	0.023	21,728	0.499		
135	CHICAGO TITLE & TRUST CO. TRUSTEE TR # 51152	A PART OF LOT 19	22,546	0.518	3,089	0.071	2,480	0.057	609	0.014	19,457	0.447		
136	VERA & ALVIN CLAIRE	A PART OF LOT 19	31,666	0.727	459	0.011	NONE	NONE	459	0.011	31,207	0.716		
137	HOWARD KAY, et al	S 60' S 3/4, E 1/2 LOT 20	17,998	0.413	2,400	0.055	1,980	0.045	420	0.010	15,598	0.358		

TURNER'S SUBDIVISION BLK. 1 (RECORDED IN BOOK A-1 Pg. 63)

148	JOE & WILMA CULLUM	LOT 18 2 BLOCK 6 LOT 1 BLOCK 12	13,300	0.305	532	0.012	NONE	NONE	532	0.012	12,768	0.293		
147	LEROY & LILLIE THOMPSON	LOT 3 BLOCK 1	5,000	0.115	5,000	0.115	NONE	NONE	5,000	0.115	0	0		
146	MELVIN & CAROLYN VIANO	N 42' LOT 4 BLOCK 1	4,200	0.096	4,200	0.096	NONE	NONE	4,200	0.096	000	0.000		
145	CHESTER & MAGNOLIA PEACOCK	S 8' LOT 4, N 26' LOT 5	3,400	0.078	3,400	0.078	NONE	NONE	3,400	0.078	000	0.000		
144	FRED M. STEINBERGER	S 26 LOT 5, N 13 LOT 6	3,700	0.085	3,700	0.085	NONE	NONE	3,700	0.085	000	0.000		
143	JOHN & CATHERINE O'HAGAN	S 37' LOT 6, N 20' LOT 7	5,700	0.131	5,700	0.131	NONE	NONE	5,700	0.131	000	0.000		
142	LAWRENCE & LOIS ANDERSON	S 30' LOT 7, N 40' LOT 8	7,000	0.161	7,000	0.161	NONE	NONE	7,000	0.161	000	0.000		
141	P.D.R., VAN ZANDT	S 10 LOT 8, LOT 9	6,000	0.138	6,000	0.138	NONE	NONE	6,000	0.138	000	0.000		

TURNER'S SUBDIVISION BLOCK 2 (RECORDED IN BOOK A-1 Pg. 63)

PARCEL NO.	OWNER	GENERAL DESCRIPTION	TOTAL		TOTAL R.O.W. REQD		AREA IN EXIST R/W		NET R.O.W. REQD		REMAINDER	
			SQ FT	ACRES	SQ FT	ACRES	SQ FT	ACRES	SQ FT	ACRES	SQ FT.	ACRES
140	WM & SELMA JONES	LOT 1 BLOCK 2	5,000	0.115	5,000	0.115	NONE	NONE	5,000	0.115	000	0.000
139	ANNA SKLUT	LOT 2, LOT 3	10,000	0.230	10,000	0.230	NONE	NONE	10,000	0.230	000	0.000
138	ANTHONY & MONICA PROMBO	LOT 4 BLOCK 2	5,000	0.115	5,000	0.115	NONE	NONE	5,000	0.115	000	0.000
114	MURIEL CURZON	LOT 5 BLOCK 2	5,000	0.115	5,000	0.115	NONE	NONE	5,000	0.115	000	0.000

CURVE NO. 9 DATA
Δ = 0° 37' 48"
D = 0° 30'
R = 11,459.16'
T = 63.00'
L = 126.00'
E = 0.17'
P.I. = STA. 50+03.52
P.C. = STA. 49+40.52
P.T. = STA. 50+66.52

CURVE NO. 10 DATA
Δ = 0° 57' 43"
D = 0° 30'
R = 11,459.16'
T = 62.86'
L = 125.72'
E = 0.17'
P.I. = STA. 52+78.95
P.C. = STA. 52+16.09
P.T. = STA. 53+41.81

NOTE
ALL OFFSETS & STATIONS WITHIN AREA OF CURVES ARE FROM TANGENTS & ALL P.I.'S MARKED W/P.K. NAILS UNLESS OTHERWISE NOTED.

JAMES J. GIORDANO
REGISTERED LAND SURVEYOR NO. 1850
STATE OF ILLINOIS

STATE OF ILLINOIS
LASALLE COUNTY

CERTIFICATE OF SURVEY

I, James Giordano, hereby certify that this plat of Public Highway Federal Aid Route 64 (Ill. 47) Section (111 CS) R, W&RS was prepared under my direction and that the survey is true and complete as shown.

Signed James J. Giordano
Registered Illinois Land Surveyor No. 1850

Dated JANUARY 2, 1975

Doc. # 236967
Dec. 17, 1974
Road Plat Book
Page 154

RIGHT OF WAY PLAT
STATE OF ILLINOIS
GRUNDY COUNTY
F.A. ROUTE 64 (ILL. 47)
SECTION (111CS) R, W&RS
AUGUST 1974
SCALE: 1" = 40' PLAT NO. 4 OF 14
JOB NO. R-93-008-71

Rev. 6-30-88 Rev. 2-8-5/7/77 - REV W.S. 7-7-76 REVIS. A.N. 10-7-75 11-21-75 REV. C.S. 4/19/76 REV. W.S. 11-7-75

MODEL: Untitled-2 [Sheet]
FILE NAME: H:\P\224055 - D3 V-JV PTB 211-223\224055.001 - IL 47 over CSX RR and Buchanan CN 66M30\CADD\Microstation\CADD Drawings\D366M30-sht-ROW.dgn

OATES ASSOCIATES
www.oatesassociates.com
ILLINOIS DESIGN FIRM LICENSE NO.: 184.001115

USER NAME = kevin.botterbush	DESIGNED -	REVISED -
	DRAWN -	REVISED -
	CHECKED -	REVISED -
PLOT DATE = 5/19/2026	DATE -	REVISED -

STATE OF ILLINOIS
DEPARTMENT OF TRANSPORTATION

RIGHT OF WAY PLANS

SCALE: | SHEET 3 OF 3 SHEETS | STA. | TO STA.

F.A.P RTE.	SECTION	COUNTY	TOTAL SHEETS	SHEET NO.
326	((111)HB1,HVB1)ES	GRUNDY	137	44
		CONTRACT NO. 66M30		
		ILLINOIS	FED. AID PROJECT	

INDEX OF LIGHTING SHEETS

E-1	GENERAL NOTES, INDEX, LIST OF STANDARDS & PERFORMANCE TABLES
E-2	LIGHTING PLAN 1 OF 2
E-3	LIGHTING PLAN 2 OF 2
E-4	TEMPORARY LIGHTING PLAN 1 OF 2
E-5	TEMPORARY LIGHTING PLAN 2 OF 2
E-6	LIGHTING DETAILS 1 OF 2 (POLE DETALS)
E-7	LIGHTING DETAILS 2 OF 2 (CIRCUIT SCHEMATICS / LIGHTING CONTROLLER LOADS)

HIGHWAY STANDARDS

812001-01	RACEWAYS EMBEDDED IN STRUCTURE
821001	UNDERPASS LIGHTING WALL MOUNT
821101-03	LUMINAIRE WIRING IN POLE
830026-01	TEMPORARY ROADWAY LIGHTING
836001-05	LIGHT POLE FOUNDATION
838001-01	BREAKAWAY DEVICES

BILL OF MATERIAL

PAY ITEM NUMBER	DESCRIPTION	UNIT	QUANTITY
81028730	UNDERGROUND CONDUIT, COILABLE NONMETALLIC CONDUIT, 1 1/4" DIA.	FOOT	1360
81100300	CONDUIT ATTACHED TO STRUCTURE, 1" DIA., GALVANIZED STEEL	FOOT	500
81200215	CONDUIT EMBEDDED IN STRUCTURE, 1 1/4" DIA., PVC	FOOT	1040
81300550	JUNCTION BOX, STAINLESS STEEL, ATTACHED TO STRUCTURE, 12" X 12" X 6"	EACH	16
81702120	ELECTRIC CABLE IN CONDUIT, 600V (XLP-TYPE USE) 1/C NO. 8	FOOT	23000
81800340	AERIAL CABLE, 3-1/C NO. 8 WITH MESSENGER WIRE	FOOT	440
*82110007	LUMINAIRE, LED, ROADWAY, OUTPUT DESIGNATION G	EACH	12
82110019	LUMINAIRE, LED, UNDERPASS, WALLMOUNT, OUTPUT DESIGNATION A	EACH	8
83600300	LIGHT POLE FOUNDATION, 30" DIAMETER	FOOT	49
84200600	REMOVAL OF LIGHTING UNIT, NO SALVAGE	EACH	5
84500120	REMOVAL OF ELECTRIC SERVICE INSTALLATION	EACH	1
*X0326357	ROADWAY LIGHTING MODIFICATIONS	L SUM	1
*X8300001	LIGHT POLE (SPECIAL)	EACH	12
*X8410102	TEMPORARY LIGHTING SYSTEM	L SUM	1
*X8420111	REMOVAL OF UNDERPASS LIGHTING UNIT, NO SALVAGE	EACH	1

RYAN D. NATION
062-055391
REGISTERED PROFESSIONAL ENGINEER OF ILLINOIS
EXPIRES 11/30/27

Illinois Department of Transportation

Luminaire Performance Table

Project

Date	Contract Number	Section Number	County
03/19/26	66M30	((111)HB1,HVB1)ES	Grundy

Marked Route Number	Municipality
IL-47	Morris, IL

Roadway

Lane Width (see note 4)	Number and Direction of lanes	Median Width	Surface Classification	Q-Zero Value
13 FT	2 - 1 in each direction	NA	R3	0.07

Structure

Mounting Height	Arm Length	Set-Back (see note 1)	Number of Luminaries
15 FT	NA	15 FT	1

Luminaire

Description	Transverse Distribution	Lateral Distribution
Luminaire, LED, Underpass, Wall-mount, A	TYPE III	Short

Total Light Loss Factor (LLF)	B-U-G Rating	Shields	Dimming Protocol
0.7	U=0		0-10V

Layout

Spacing	Configuration
44 FT	Opposite

Performance (see notes 5 and 6)

Average Illuminance, E_{AVE} (fc)	Uniformity Ratio, E_{AVE}/E_{MIN}
0.7	3.3

Average Luminance, L_{AVE} (cd/m²)	Uniformity Ratio, L_{AVE}/L_{MIN}	Uniformity Ratio, L_{MAX}/L_{MIN}	Veiling Luminance Ratio, L_V/L_{AVE}

Light Tresspass (see notes 5 and 7)

Distance to ROW (behind pole)	Max. Horizontal Illuminance at ROW, E_H	Max. Vertical Illuminance at ROW, E_V
NA	NA	NA

Notes

1. Set-Back is from Edge of Pavement (white line).
2. Lighting calculations shall be performed with all luminaires oriented toward and perpendicular to the roadway.
3. Performance requirements shall be the minimum acceptable standards of photometric performance for the luminaire, based on the given conditions listed above.
4. Lane width is the width of each **individual** lane, not to be confused with total roadway width.
5. Compliance with performance criteria shall be held to one significant digit.
6. Photometric calculations for roadways shall be performed with a total light loss factor of 0.7
7. Light trespass calculations shall be performed with a total light loss factor of 1.0 and with horizontal calculations performed at grade and vertical calculations performed with calculation points located three feet above grade.
8. Luminaire performance table is intended to define the luminaire and does not necessarily match any specific roadway geometry, mounting height, setback, or arm length.

Printed 04/03/26

BDE 5630 (Rev. 06/06/24)

LUMINAIRE PERFORMANCE TABLE

MODEL: LightingDetail-02 [Sheet]
FILE NAME: I:\23\Jobs\23H0038_15\CAD\CADSheets\D366M30-eht-detail.dgn

HANSON

USER NAME = hardl02376	DESIGNED - RDN 1/26/2026	REVISED -	STATE OF ILLINOIS DEPARTMENT OF TRANSPORTATION	GENERAL NOTES, INDEX, LIST OF STANDARDS & PERFORMANCE TABLES
	DRAWN - DJP 1/26/2026	REVISED -		
	CHECKED - RDN 1/26/2026	REVISED -		
PLOT DATE = 12/30/2025	DATE -	REVISED -		SCALE: N.T.S. SHEET 1 OF 7 SHEETS STA. TO STA.

F.A.P. RTE.	SECTION	COUNTY	TOTAL SHEETS	SHEET NO.
326	((111)HB1,HVB1)ES	GRUNDY	137	45
		CONTRACT NO. 66M30		
23H0038.15	ILLINOIS	FED. AID PROJECT		

LIGHTING LEGEND

PROPOSED DECORATIVE 47.5 FT POLE WITH 12 FT ARM ON BREAKAWAY COUPLINGS WITH TWO-PIECE CLAM SHELL BASE

EXISTING DECORATIVE LIGHT POLE TO REMAIN

PROPOSED JUNCTION BOX

WALL MOUNTED, UNDERPASS LUMINAIRE (LED)

X(X11)
- LIGHTING CIRCUIT IDENTIFIER
- RECEPTACLE CIRCUIT IDENTIFIER
- LIGHT POLE NUMBER IDENTIFIER

STA. XX+XX.XX
XX.XX' XT. FOC
- STATION
- SET BACK FROM ℄ OF ROAD TO CENTER OF POLE

CONDUCTOR / CONDUIT NOTES

(1) 6/C #8, 1/C #8 NEUTRAL AND 1/C #8 GND XLP-TYPE USE CABLES IN 1¼" SCHEDULE 40 HDPE CONDUIT

(2) 6/C #8, 1/C #8 NEUTRAL AND 1/C #8 GND XLP-TYPE USE CABLES IN 1¼" SCHEDULE 40 HDPE CONDUIT EMBEDED IN STRUCTURE

(3) 2/C #8, 1/C #8 GND XLP-TYPE USE CABLES IN 1" GALVNIZED RIGID STEEL CONDUIT ATTACHED TO STRUCTURE.

KEYED NOTES

[1] EXISTING CONDUIT STUB OUT AT EXISTING FIXTURE. INTERCEPT & EXTEND CONDUIT TO NEW AND TEMPORARY FIXTURES AS INDICATED.

[2] PROVIDE STAINLESS STEEL JUNCTION BOXES (12"X12'X6") ON WING WALL & BRIDGE PARAPET WITH 2" FLEXIBLE LIQUID TIGHT NON-METALIC CONDUIT BETWEEN AS SHOWN ON IDOT STANDARD DRAWING 812001-01

[3] UNDERPASS LIGHT FIXTURE MOUNTED AT 15 FT ABOVE ROADWAY ON BRIDGE PIER.

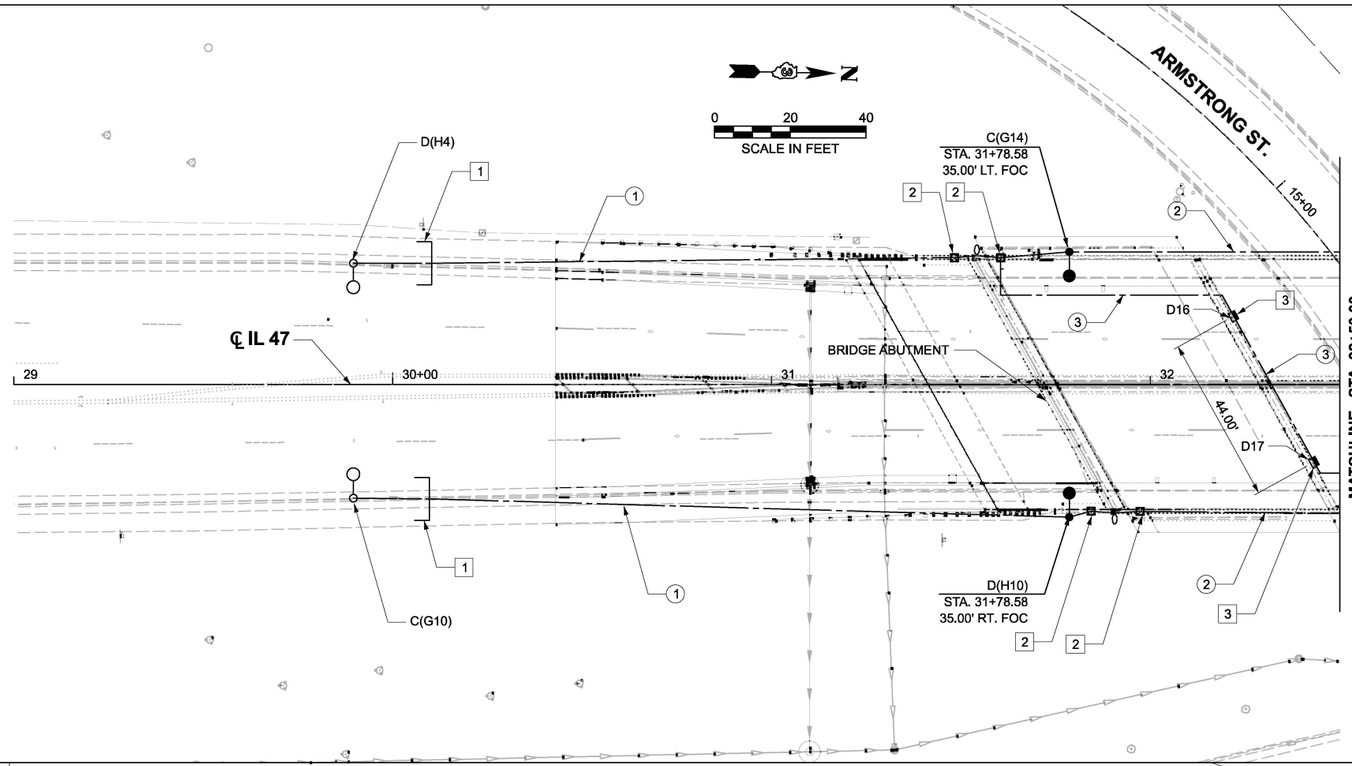

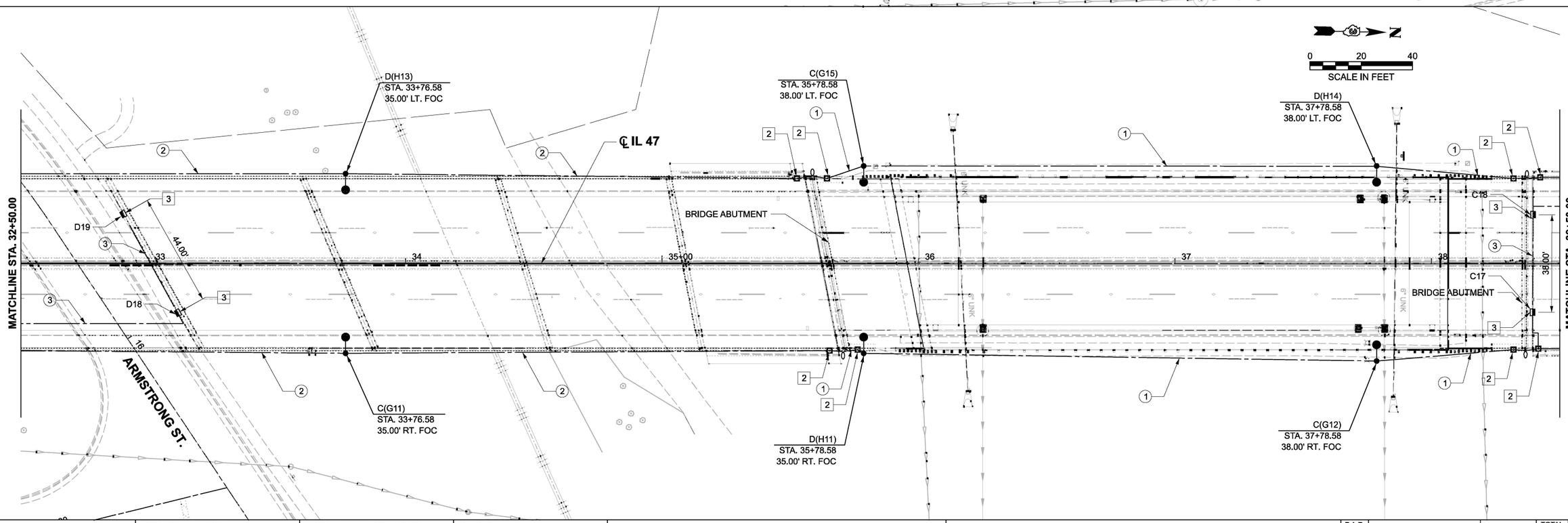

MODEL: LGT Sheet - 1 (Sheet)
FILE NAME: I:\23jobs\23H0038_15\CAD\CADsheets\D366M30-sht-light.dgn

HANSON

USER NAME ▪ Pop00275	DESIGNED - RDN 1/26/2026	REVISED -	
	DRAWN - DJP 1/26/2026	REVISED -	
	CHECKED - RDN 1/26/2026	REVISED -	
PLOT DATE ▪ 4/3/2026	DATE -	REVISED -	

STATE OF ILLINOIS
DEPARTMENT OF TRANSPORTATION

LIGHTING PLAN - 1 OF 2

SCALE: 1"=20' | SHEET 2 OF 7 SHEETS | STA. 28+80.00 | TO STA. 38+80.00

F.A.P. RTE.	SECTION	COUNTY	TOTAL SHEETS	SHEET NO.
326	((111)HB1,HVB1)ES	GRUNDY	137	46
		CONTRACT NO. 66M30		
23H0038.15	ILLINOIS	FED. AID PROJECT		

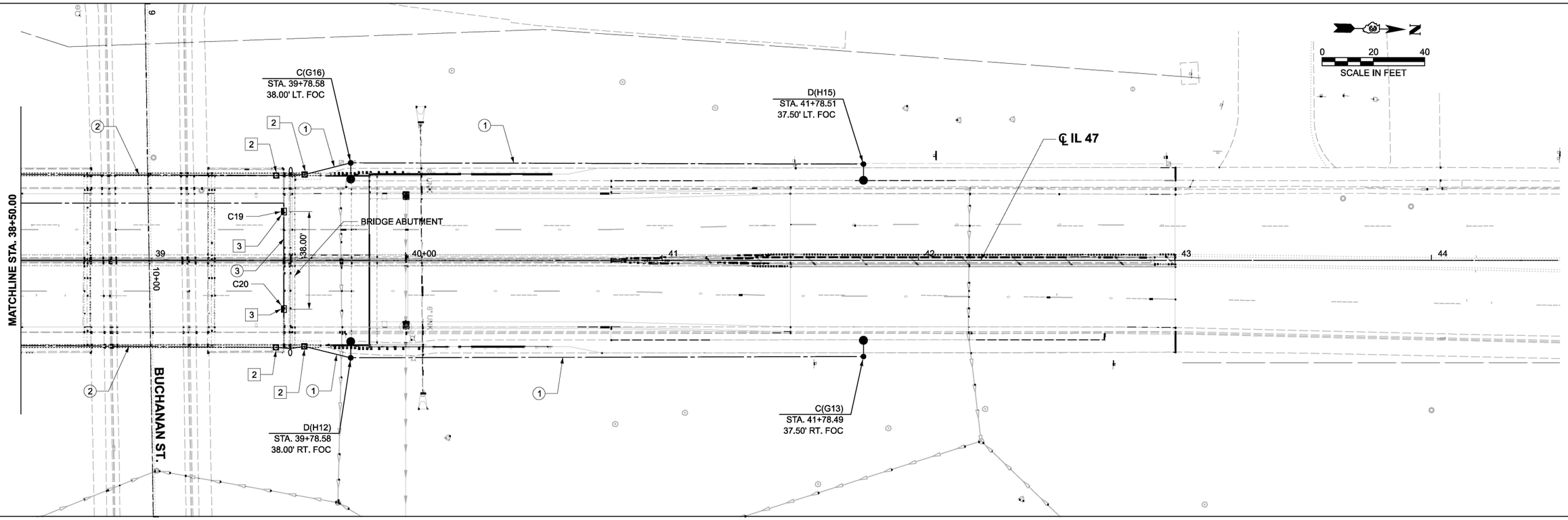

NOTES

1. SEE PROPOSED LIGHTING PLAN - 1 OF 2 FOR LEGEND, CONDUCTOR/CONDUIT NOTES & KEYED NOTES.

MODEL: LGT Sheet - 2 (Sheet)
FILE NAME: I:\23jobs\23H0038_15\CAD\CADsheets\D366M30-sht-lgnt.dgn

HANSON™

USER NAME ▪ Pop00275	DESIGNED - RDN 1/26/2026	REVISED -	
	DRAWN - DJP 1/26/2026	REVISED -	
	CHECKED - RDN 1/26/2026	REVISED -	
PLOT DATE ▪ 4/3/2026	DATE -	REVISED -	

STATE OF ILLINOIS
DEPARTMENT OF TRANSPORTATION

LIGHTING PLAN - 2 OF 2

SCALE: 1"=20' | SHEET 3 OF 7 SHEETS | STA. 38+50.00 | TO STA. 44+50.00

F.A.P. RTE.	SECTION	COUNTY	TOTAL SHEETS	SHEET NO.
326	((111)HB1,HVB1)ES	GRUNDY	137	47
		CONTRACT NO. 66M30		
23H0038.15	ILLINOIS	FED. AID PROJECT		

LIGHTING LEGEND

- NEW TEMPORARY WOOD LIGHT POLE AND FIXTURE.
- EXISTING BRIDGE MOUNTED LIGHT POLE TO REMAIN AND BE RE-USED AS TEMPORARY LIGHTING.
- EXISTING BRIDGE MOUNTED LIGHT POLE TO BE REMOVED DURING STAGE 1.
- PROPOSED JUNCTION BOX

CONDUCTOR / CONDUIT NOTES

4. TEMPORARY AERIAL ELECTRIC CABLING SEE STANDARD DRAWING 830026-01.
5. 2/C #10, 1/C #10G XLP-TYPE USE CABLES IN 1" SCHEDULE 40 PVC. CONDUIT. TEMPORARILY ATTACHED TO STRUCTURE FOR TEMPORARY LIGHTING.
6. 2/C #10, 1/C #10G XLP TYPE USE CABLES IN 1" SCHEDULE 40 HDPE CONDUIT.

KEYED NOTES

1. EXISTING CONDUIT STUB OUT AT EXISTING FIXTURE. INTERCEPT & EXTEND CONDUIT TO NEW AND TEMPORARY FIXTURES AS INDICATED.
3. PROVIDE STAINLESS STEEL JUNCTION BOXES (12"X12'X6") ON WING WALL & BRIDGE PARAPET WITH 2" FLEXIBLE LIQUID TIGHT NON-METALIC CONDUIT BETWEEN AS SHOWN ON IDOT STANDARD DRAWING 812001-01
5. REMOVE EXISTING LIGHT POLE & FIXTURE AND ASSOCIATED CONDUIT & WIRE DURING STAGE 1.
6. REMOVE EXISTING ELECTRICAL SERVICE DURING STAGE 1. CUT CONDUIT TO 18" BELOW GRADE, PULL OUT EXISTING WIRING & ABANDON REMAINING CONDUIT BELOW GRADE.
7. REMOVE EXISTING LIGHT POLE, FIXTURE & ASSOCIATED CONDUIT & WIRE ONCE STAGE 1 LIGHITING IS OPERATIONAL.
8. INSTALL PERMANENT UNDERPASS LIGHTING AT THE BEGINNING OF STAGE I AND CONNECT TO TEMPORARY LIGHTING CIRCUIT. RE-WIRE THE UNDERPASS LIGHTS TO THE PERMANENT LIGHTING CIRCUITS PER LIGHTING PLAN 1 AND 2 OF 2 ONCE CIRCUITS ARE IN PLACE.
9. DROP 2/C #10, 1/C #10G TYPE XLP USE CABLES IN 1" SCHEDULE 40 PVC CONDUIT DOWN TEMPORARY WOOD LIGHT POLE AND TEMPORARILY ATTACH TO STRUCTURE FOR TEMPORARY UNDERPASS LIGHTING.
10. ONCE STAGE 1 IS COMPLETED AND THE PERMANENT CIRCUIT IS IN PLACE ON THE EAST SIDE PER THE PERMANENT LIGHTING PLANS, SWITCH THE POWER SOURCE TEMPORARILY TO THE EAST SIDE FOR THE UNDERPASS LIGHTING. EXTEND 2/C #10, 1/C #10G TYPE XLP USE CABLES IN 1" SCHEDULE 40 PVC CONDUIT TEMPORARILY ATTACHED TO STRUCTURE FROM EAST SIDE PERMANENT LIGHTING CIRCUIT JUNCTION BOX.
11. EXISTING UNDERPASS LIGHT FIXTURE AND ASSOCIATED CONDUIT AND WIRE TO BE REMOVED DURING STAGE 1.

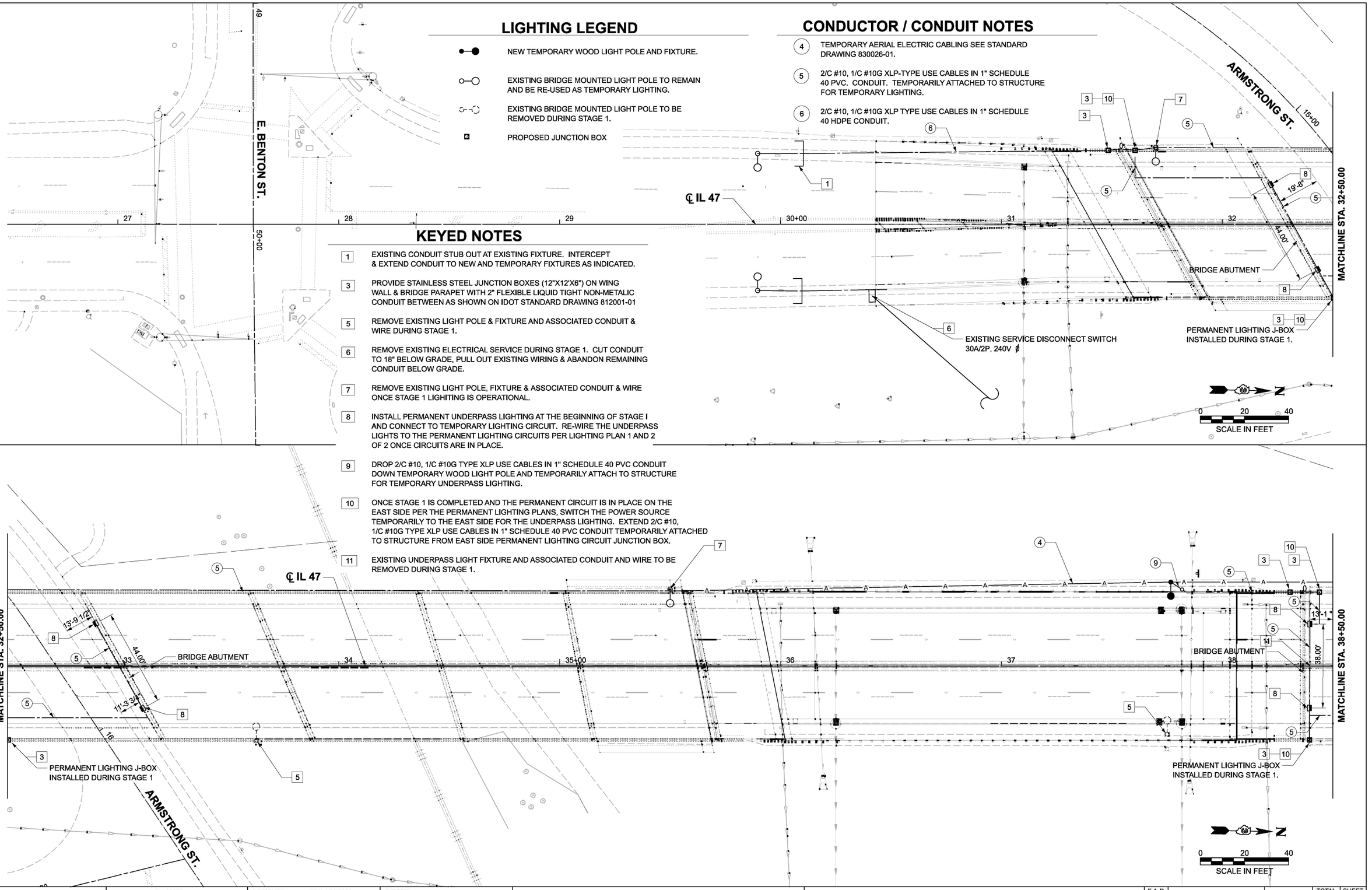

MODEL: Temp Sheet - 1 [Sheet]
FILE NAME: I:\23jobs\23H0038_15\CAD\CADsheets\D366M30-sht-light_Temp.dgn

HANSON	USER NAME = Pop00275	DESIGNED - RDN 1/26/2026	REVISED -	STATE OF ILLINOIS DEPARTMENT OF TRANSPORTATION	TEMPORARY LIGHTING PLAN - 1 OF 2	F.A.P. RTE. 326	SECTION ((111)HB1,HVB1)ES	COUNTY GRUNDY	TOTAL SHEETS 137	SHEET NO. 48
		DRAWN - DJP 1/26/2026	REVISED -					CONTRACT NO. 66M30		
		CHECKED - RDN 1/26/2026	REVISED -							
	PLOT DATE = 4/3/2026	DATE -	REVISED -		SCALE: 1"=20' SHEET 4 OF 7 SHEETS STA. 26+50.00 TO STA. 38+50.00	23H0038.15	ILLINOIS	FED. AID PROJECT		

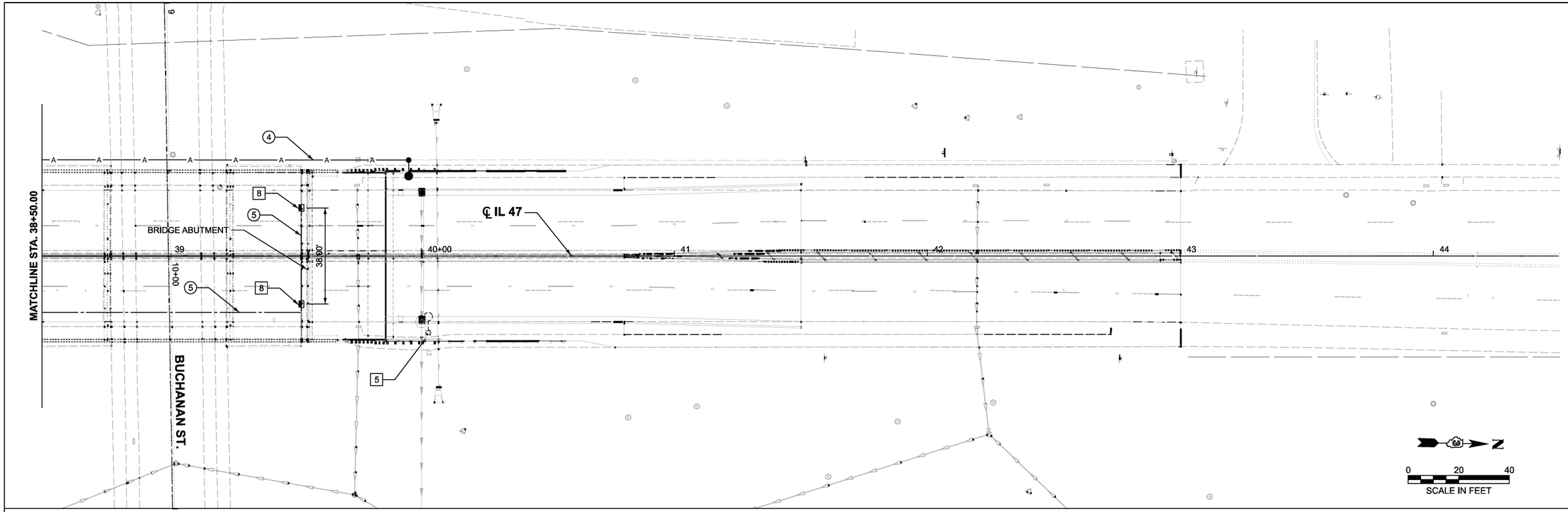

NOTES

SEE TEMPORARY LIGHTING PLANS - 1 OF 2 FOR LEGEND, CONDUIT / CONDUCTOR NOTES & KEYED NOTES.

MODEL: Temp Sheet - 2 [Sheet]
FILE NAME: I:\23jobs\23H0038_15\CAD\CADSheets\D366M30-sht-Hgnt_Temp.dgn

HANSON

USER NAME = Pop00275	DESIGNED - RDN 1/26/2026	REVISED -	
	DRAWN - DJP 1/26/2026	REVISED -	
	CHECKED - RDN 1/26/2026	REVISED -	
PLOT DATE = 4/3/2026	DATE -	REVISED -	

STATE OF ILLINOIS
DEPARTMENT OF TRANSPORTATION

TEMPORARY LIGHTING PLAN - 2 OF 2

SCALE: 1"=20' | SHEET 5 OF 7 SHEETS | STA. 38+50.00 | TO STA. 44+50.00

F.A.P. RTE.	SECTION	COUNTY	TOTAL SHEETS	SHEET NO.
326	((111)HB1,HVB1)ES	GRUNDY	137	49
		CONTRACT NO. 66M30		
23H0038.15	ILLINOIS	FED. AID PROJECT		

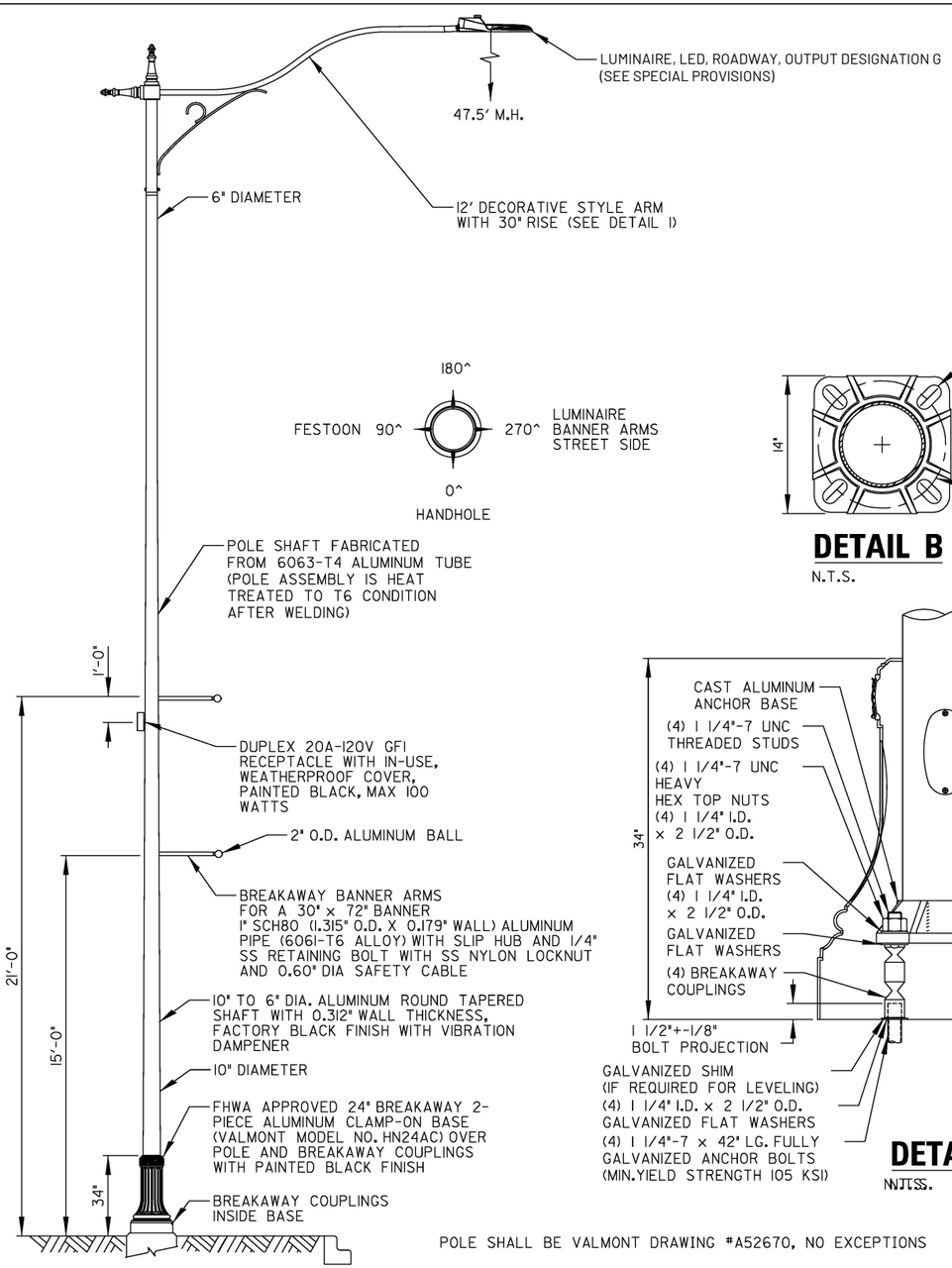

POLE SHALL BE VALMONT DRAWING #A52670, NO EXCEPTIONS

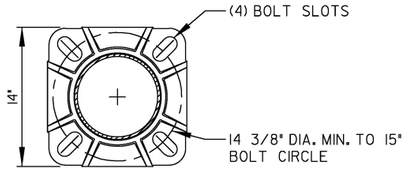

DETAIL B

N.T.S.

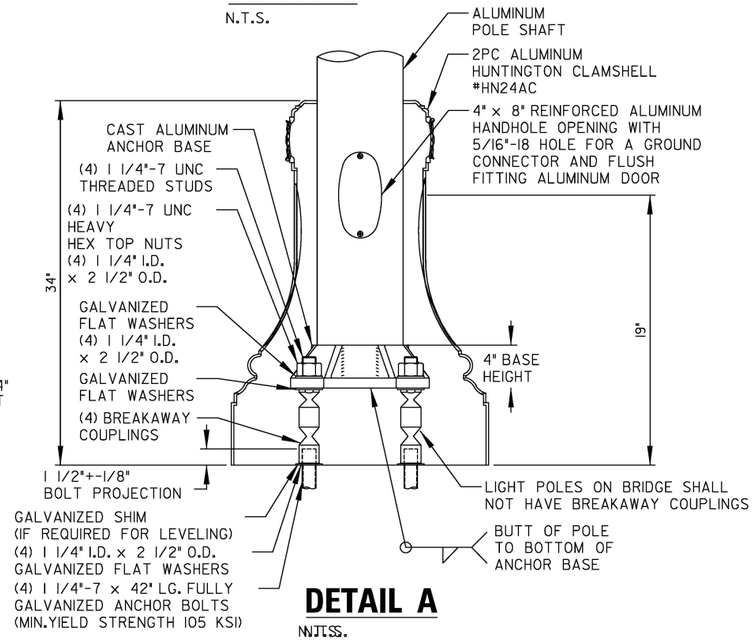

DETAIL A

N.T.S.

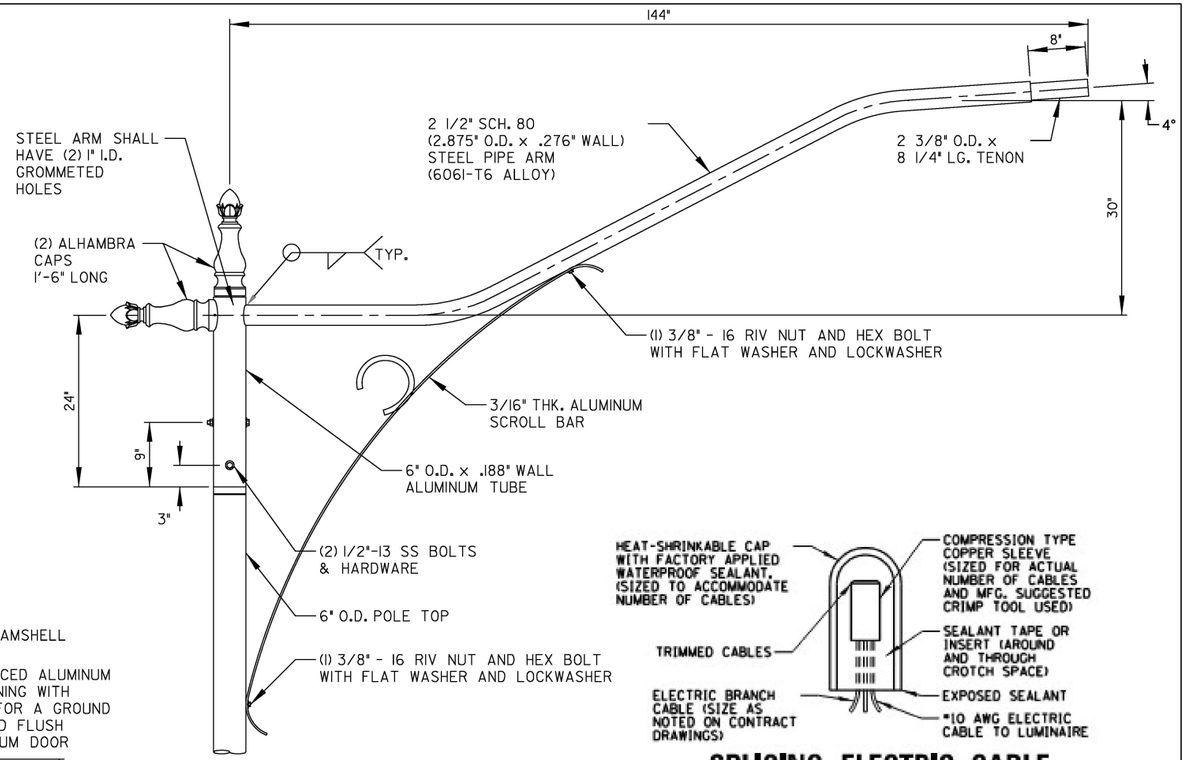

DETAIL 1: LUMINAIRE ARM

N.T.S.

SPLICING ELECTRIC CABLE

N.T.S.

SPECIFICATION NOTES:

1. ALL EQUIPMENT SHOWN ABOVE (EXCEPT LUMINAIRE) PAID FOR UNDER "LIGHT POLE (SPECIAL)" (SEE SPECIAL PROVISION).
2. DECORATIVE POLE ASSEMBLY SHALL BE VALMONT OR PRE APPROVED EQUIVALENT, FACTORY PAINTED BLACK WITH 5 YEAR WARRANTY.
3. SYSTEM INCLUSIVE OF POLE, COUPLINGS, BANNER ARMS, AND HUNTINGTON DECORATIVE CLAM-SHELL BASE SHALL CARRY FHWA BREAKAWAY RATING AND BE LISTED AS SUCH.
4. CONTRACTOR IS TO FOLLOW MANUFACTURER'S GUIDELINES FOR PROPER FINISH TOUCH UP TO REPAIR ALL DAMAGE INCURRED DURING INSTALLATION. TOUCH UP TO BE CONDUCTED BY CONTRACTOR TRAINED BY MANUFACTURER. ENGINEER SHALL INSPECT PRIOR TO SIGN OFF ON INSTALLATION.
5. PAINT IS TGIC SUPER DURABLE POWDER TOP COAT FORMULATED TO MEET AAMA 2604 5 YEAR COLOR AND GLOSS RETENTION STANDARD. THIS TOP COAT IS TO BE APPLIED TO A DFT OF 3.0 MILS. CONTRACTOR TO FOLLOW MANUFACTURERS GUIDELINES FOR PROPER FINISH TOUCHUP TO REPAIR ANY DAMAGE THAT OCCURRED DURING TRANSPORTATION OR INSTALLATION.
6. ANCHOR BOLTS SHALL BE FI554 GRADE 105.

DECORATIVE LIGHTING UNIT

N.T.S.

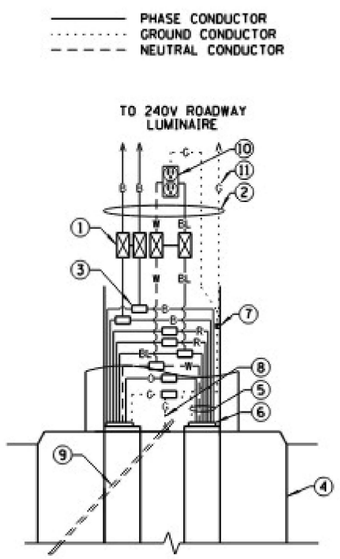

1. 5A FUSE FOR LUMINAIRES AND 2A FUSE FOR FESTOON RECEPTACLE (NEUTRAL SHALL BE NON-FUSED) 2-POLE BREAKAWAY FUSE HOLDER & INSULATING BOOTS (SEE NOTE 1)
2. XLP-TYPE USE POLE WIRES (#10 TO LUMINAIRE & #12 TO RECEPTACLE) COLOR TO MATCH BRANCH WIRING
3. MULTIPLE COMPRESSION FITTINGS (SPLICE), TYP.
4. CONCRETE FOUNDATION
5. WIRES AS SHOWN ON PLANS
6. PROPOSED LIGHTING DUCT PULLED THROUGH PVC RACEWAY
7. POLE GROUND LUG
8. NO. 6 GROUND WIRE MECHANICALLY CLAMPED TO GROUND ROD
9. GROUND ROD
10. 20A-120V GFCI-WR RECEPTACLE
11. WIRE COLOR
    R=RED, B=BLACK, BL=BLUE } LIGHTING
    O=ORANGE, W=WHITE, G=GREEN } RECEPTACLES

POLE HANDHOLE WIRING DIAGRAM

N.T.S.

MODEL: LightingDetail-03 [Sheet]
FILE NAME: I:\23\jobs\23H0038_15\CAD\CADsheets\D366M30-sht-detail.dgn

HANSON

USER NAME = Pop00275	DESIGNED - RDN 1/26/2026	REVISED - MDB 8/19/2026	
	DRAWN - DJP 1/26/2026	REVISED -	
	CHECKED - RDN 1/26/2026	REVISED -	
PLOT DATE = 8/19/2026	DATE -	REVISED -	

STATE OF ILLINOIS
DEPARTMENT OF TRANSPORTATION

LIGHTING DETAILS - 1 OF 2 (POLE DETAILS)

SCALE: N.T.S. | SHEET 6 OF 7 SHEETS | STA. | TO STA.

F.A.P. RTE.	SECTION	COUNTY	TOTAL SHEETS	SHEET NO.
326	((111)HB1,HVB1)ES	GRUNDY	137	50
		CONTRACT NO. 66M30		
23H0038,15	ILLINOIS	FED. AID PROJECT		

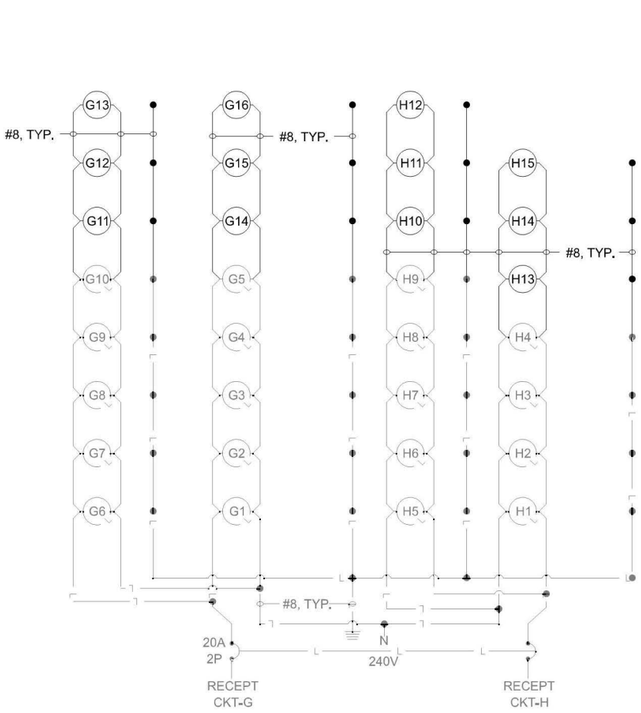

RECEPTACLE ONE-LINE DIAGRAM

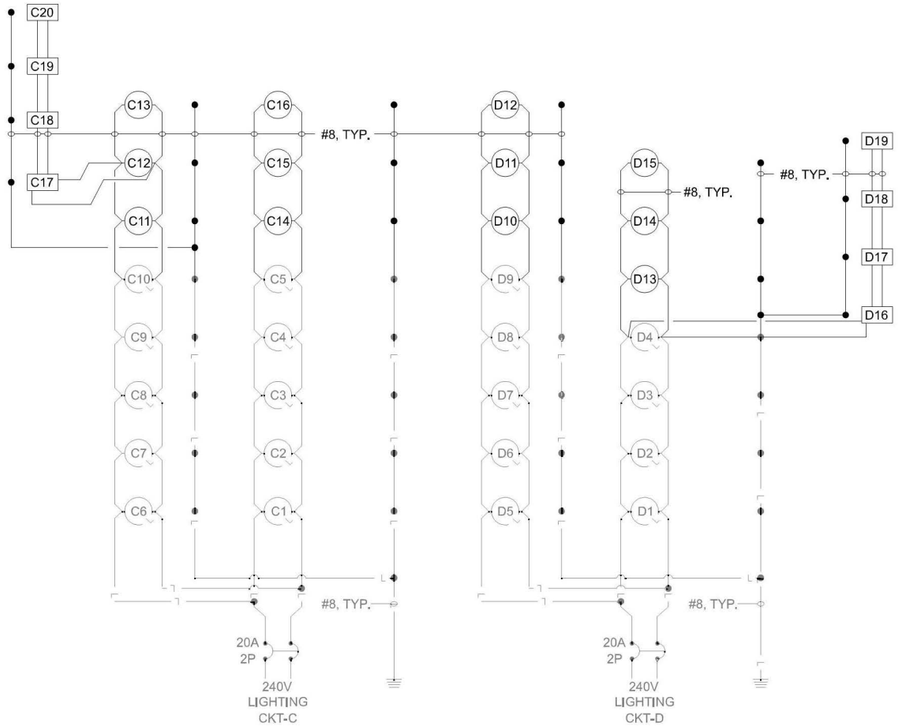

LIGHTING ONE-LINE DIAGRAM

LIGHT POLE IDENTIFIER	LUMINAIRE CKT	FESTOON CKT
C1	C	G
C2	C	G
C3	C	G
C4	C	G
C5	C	G
C6	C	G
C7	C	G
C8	C	G
C9	C	G
C10	C	G
C11	**C**	**G**
C12	**C**	**G**
C13	**C**	**G**
C14	**C**	**G**
C15	**C**	**G**
C16	**C**	**G**
C17	**C**	**-**
C18	**C**	**-**
C19	**C**	**-**
C20	**C**	**-**
D1	D	H
D2	D	H
D3	D	H
D4	D	H
D5	D	H
D6	D	H
D7	D	H
D8	D	H
D9	D	H
D10	**D**	**H**
D11	**D**	**H**
D12	**D**	**H**
D13	**D**	**H**
D14	**D**	**H**
D15	**D**	**H**
D16	**D**	**-**
D17	**D**	**-**
D18	**D**	**-**
D19	**D**	**-**

NOTE BOLD ITEMS ARE ITEMS THAT ARE BEING ADDED TO THE EXISTING SYSTEM.

LEGEND

GROUND ROD

(#) LIGHTING UNIT
# INDICATES POLE IDENTIFIER

LIGHTING CONTROLLER "C1" CIRCUIT LOADS

CIRCUITE ID	WIRE COLOR	191W ROADWAY LUMINAIRE		109W ROADWAY LUMINAIRE		25.9W UNDERPASS LUMINAIRE		100W FESTOON RECEPTACLE		TOTAL CIRCUIT LOAD	
		QTY.	LOAD/FIXT. (WATTS)	QTY.	LOAD/FIXT. (WATTS)	QTY.	LOAD/FIXT. (WATTS)	QTY.	LOAD/FIXT. (WATTS)	(WATTS)	AMPS (VOLTS)
A	B	11	191 W	-	-	-	-	-	-	2,101 W	8.8 A (240V)
B	R	10	191 W	-	-	-	-	-	-	1,910 W	8.0 A (240V)
C	B	10	191 W	**6**	**109 W**	**4**	**25.9 W**	-	-	**2,658 W**	**11.1 A (240V)**
D	R	9	191 W	**6**	**109 W**	**4**	**25.9 W**	-	-	**2,477 W**	**10.3 A (240V)**
E	BL	-	-	-	-	-	-	11	100W	1,100 W	9.2 A (120V)
F	O	-	-	-	-	-	-	10	100W	1,000 W	8.3 A (120V)
G	BL	-	-	-	-	-	-	**16**	**100W**	**1,600 W**	**13.3 A (120V)**
H	O	-	-	-	-	-	-	**15**	**100W**	**1,500 W**	**12.5 A (120V)**
TOTAL	-	40	N/A	**12**	**N/A**	**8**	**N/A**	**52**	N/A	**14,356 W**	**59.8 A (240V)**

NOTE BOLD ITEMS ARE ITEMS THAT ARE BEING ADDED TO THE EXISTING SYSTEM.

NOTE FOR CIRCUIT G 6 ADDITIONAL RECEPTACLES ARE ADDED TO THE EXISTING CIRCUIT

NOTE FOR CIRCUIT H 6 ADDITIONAL RECEPTACLES ARE ADDED TO THE EXISTING CIRCUIT

LUMINAIRE AND POLE SCHEDULE

MODEL: LightingDetail-01 [Sheet]
FILE NAME: I:\23jobs\23H0038_15\CADICAD\sheets\D366M30-shlt-detail.dgn

HANSON

USER NAME ■ Pop00275		DESIGNED - RDN 1/26/2026	REVISED -	
		DRAWN - DJP 1/26/2026	REVISED -	
		CHECKED - RDN 1/26/2026	REVISED -	
PLOT DATE ■ 3/19/2026		DATE -	REVISED -	

STATE OF ILLINOIS
DEPARTMENT OF TRANSPORTATION

LIGHTING DETAILS - 2 OF 2 (CIRCUIT SCHEM./LIGHTING CONTR. LOADS)

SCALE: N.T.S. | SHEET 7 OF 7 SHEETS | STA. | TO STA.

F.A.P. RTE.	SECTION	COUNTY	TOTAL SHEETS	SHEET NO.
326	((111)HB1,HVB1)ES	GRUNDY	137	51
		CONTRACT NO. 66M30		
23H0038,15	ILLINOIS	FED. AID PROJECT		

Benchmark:
BM09: Chiseled "square" on S.W. wingwall of SN 032-0086, ±Sta. 31+40.22, ±33.87' Rt., Elev. 547.09
BM12: Chiseled "X" on north bolt of fire hydrant on west side of SN 032-0086 on Armstrong St., ±Sta. 14+82.83, 18.91' Rt., Elev. 524.00

Existing Structure:
SN 032-0086 was originally built in 1978 to carry FA-100, IL-47 in Section (111 HB) over Armstrong St. & CSX Transportation, Inc. The structure consists of a 7½" normal crowned reinforced concrete slab deck on a six-span non-composite continuous W-shaped steel beam bridge with stub abutments supported on steel HP piles and five multi-column trapezoidal piers supported on spread footings. The structure has 29°, 29°, 29°, 23°, 17°, 11°, and 11° right ahead skew at the south abutment, Piers No. 1 though No. 5, and north abutment, respectively, and an overall length of 396'-4¾" from back-to-back of abutments. The out-to-out width of the structure is 68'-0". Existing protective timber shielding is in place under the deteriorating soffit area of span 2. Traffic to be maintained utilizing staged construction.

No salvage of the existing superstructure.

Notes:
No freefall deck drains will be permitted in the span over the tracks or within 10 ft. of cross arms of a railroad pole line.
All structural steel shall be metallized.
For Section A-A, see sheet 2 of 39.
Water from drainage scuppers drains down to the slope wall and connects to adjacent ditches. No water drains to CSX ROW limit.

SCOPE OF WORK

1. Remove and replace the existing superstructure and approach slabs.
2. Make new deck composite full length.
3. Reconfigure existing abutments and wingwall to semi-integral configuration.
4. Remove parapets (end posts) on wing walls of existing abutments.
5. Replace bearings utilizing extensions.
6. Extend Crash Wall at Pier No. 4.
7. Repair substructures.
8. Remove and replace slopewalls.

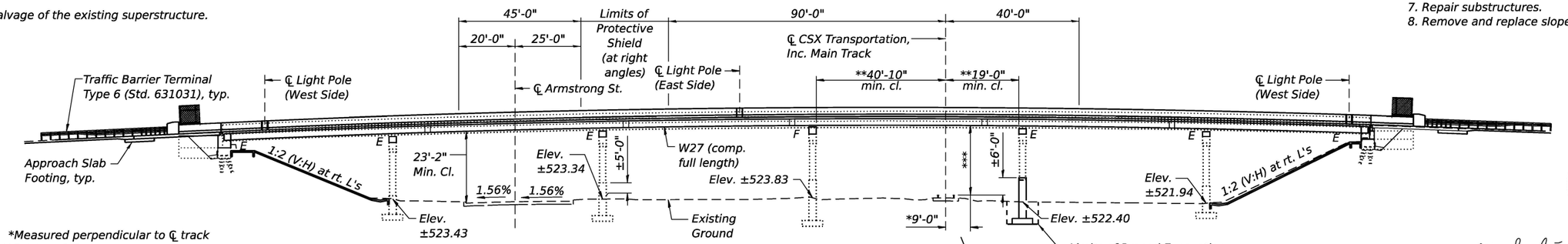

**Measured perpendicular to ℄ track*
***Existing & Proposed*
****23'-5½" min. cl. (proposed)*
22'-5" min. cl. (existing)

ELEVATION

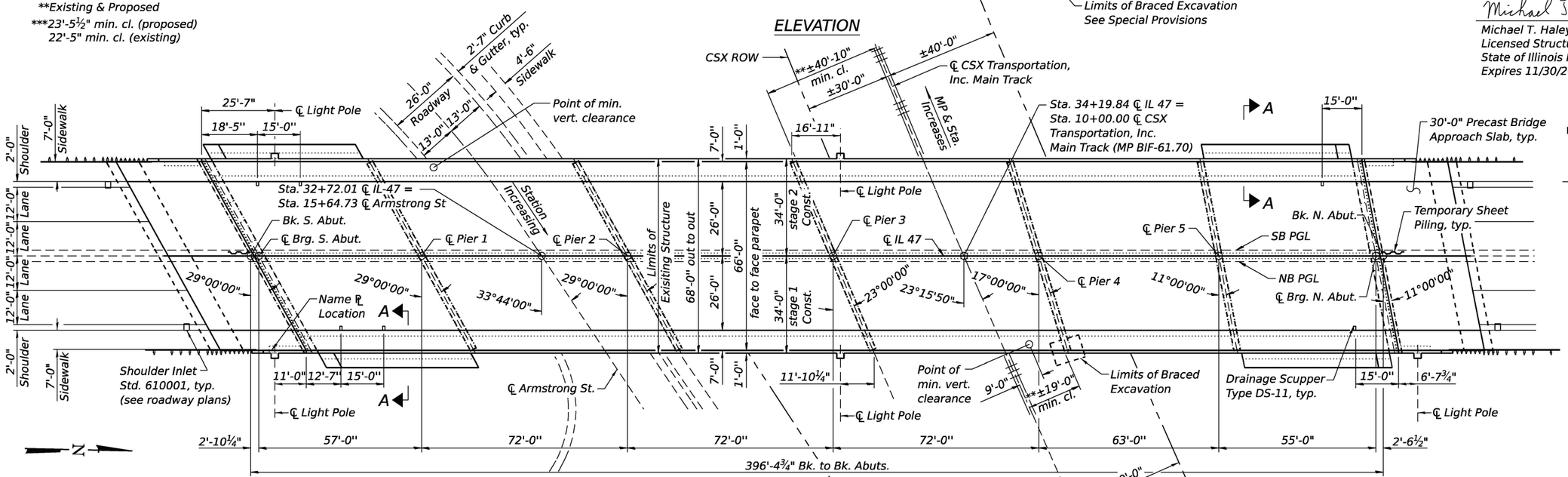

PLAN

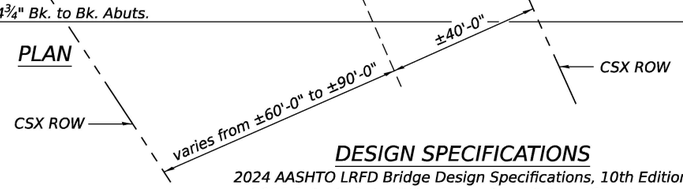

IL-47 PGL STATIONS & ELEVATIONS

Location	SB PGL		NB PGL	
	Station	P.G. Elev.	Station	P.G. Elev.
Back S. Abut.	31+69.04	546.28	31+71.26	546.39
℄ Brg. S. Abut.	31+71.89	546.42	31+74.11	546.52
℄ Pier No. 1	32+28.89	548.85	32+31.11	548.94
℄ Armstrong St.	32+70.67	550.19	32+73.35	550.27
℄ Pier No. 2	33+00.89	550.93	33+03.11	550.97
℄ Pier No. 3	33+73.15	551.87	33+74.85	551.88
℄ CSX Transpo.	34+18.92	551.89	34+20.64	551.88
℄ Pier No. 4	34+45.39	551.69	34+46.61	551.68
℄ Pier No. 5	35+08.61	550.60	35+09.39	550.58
℄ Brg. N. Abut.	35+63.61	548.94	35+64.39	548.91
Back N. Abut.	35+66.16	548.85	35+66.94	548.82

LOADING HL-93

Allow 25#/sq. ft. for future wearing surface.

DESIGN STRESSES

FIELD UNITS
f 'c = 3,500 psi
f 'c = 4,000 psi (Superstructure Concrete)
fy = 60,000 psi (Reinforcement)
fy = 50,000 psi (M270 Grade 50)
Allowable Live Load Deflection = L/1000 (Composite)
EXISTING CONSTRUCTION
f'c = 3,500 psi
fy = 40,000 psi (Reinforcement)

DESIGN SPECIFICATIONS

2024 AASHTO LRFD Bridge Design Specifications, 10th Edition
2006 Seismic Retrofitting Manual for Highway Structures: Part 1 - Bridges (FHWA-HRT-06-032)

SEISMIC DATA

Seismic Retrofit Category (SRC) = A
Design Spectral Acceleration at 1.0 sec (SD1) = 0.096g
Design Spectral Acceleration at 0.2 sec (SDS) = 0.176g
Soil Site Class = D
Performance Level = 1

LICENSED STRUCTURAL ENGINEER ★ STATE OF ILLINOIS ★ MICHAEL T. HALEY 081-005991 CHATHAM

Michael T. Haley — 04/23/2026
Michael T. Haley — *Date*
Licensed Structural Engineer
State of Illinois No. 081-005991
Expires 11/30/2026

APPROVED
FOR STRUCTURAL ADEQUACY ONLY
ENGINEER OF BRIDGES & STRUCTURES

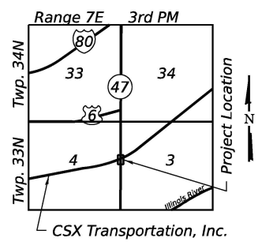

LOCATION SKETCH

GENERAL PLAN AND ELEVATION
ILLINOIS ROUTE 47 OVER ARMSTRONG STREET & CSX TRANSPORTATION INC.
F.A.P. RTE. 326 - SEC. (111HVB1)ES
GRUNDY COUNTY
STATION 34+05.65
STRUCTURE NO. 032-0086

MODEL: Br_Sheet_Consultant
FILE NAME: \\192.168.0.53\Inpos\24110-1\struct\Final Design\CADD (ORD)\CADD_Sheets\0320086-66M30-001-GPE.dgn

LIN ENGINEERING, LTD.
Consulting Engineers
Springfield, Illinois

USER NAME = Mike Haley	DESIGNED - CZ	REVISED -	
	DRAWN - SJH	REVISED -	
PLOT SCALE = $SCALE$	CHECKED - MTH	REVISED -	
PLOT DATE = 6/25/2026	CHECK DATE - 10/2025	REVISED -	

STATE OF ILLINOIS
DEPARTMENT OF TRANSPORTATION

SHEET 1 OF 39 SHEETS

F.A.P. RTE.	SECTION	COUNTY	TOTAL SHEETS	SHEET NO.
326	(111HVB1)ES	GRUNDY	137	52
		CONTRACT NO. 66M30		
	ILLINOIS | FED. AID PROJECT			

GENERAL NOTES

1. All new structural steel shall be metallized. See Special Provision for "Metallizing of Structural Steel."
2. Calculated weight of Structural Steel = 808,010 lbs (AASHTO M270,Grade 50)
   56,560 lbs (AASHTO M270,Grade 36)
3. No field welding is permitted except as specified in the contract documents.
4. Fasteners shall be ASTM F 3125 Grade A325 Type 1, hot-dip galvanized bolts in uncoated metallized areas. Bolts $\frac{7}{8}$ in. diameter, holes $\frac{15}{16}$ in. diameter, unless otherwise noted. See special provision for "Metallizing of Structural Steel".
5. Reinforcement bars designated (E) shall be epoxy coated.
6. The finishing machine rails shall be placed on the top of the top flange of the exterior beams within the deck pour. Beam blocks shall be placed between beams at all tie locations in each bay for the full width of the deck pour.
7. Slipforming of the parapets is not allowed.
8. Bearing seat surfaces shall be constructed or adjusted to the designated elevations within a tolerance of ⅛ in. (0.01 ft.). Adjustment shall be made either by grinding the surface or by shimming the bearings.
9. Plan dimensions and details relative to the existing structure have been taken from existing plans are subject to nominal construction variations. The Contractor shall field verify existing dimensions and details affecting new construction and make necessary approved adjustments prior to construction or ordering of materials. Such variations shall not be cause for additional compensation for a change in scope of the work; however, the Contractor will be paid for the quantity actually furnished at the unit price bid for the work.
9. The existing structural steel coating contains lead. The Contractor shall take appropriate precautions to address the presence of lead on this project.
10. The existing bearings contain lead plates. The Contractor shall take precautions to deal with the presence of lead on this project.

INDEX OF SHEETS

1. General Plan and Elevation
2. General Data
3-4. Stage Construction Details
5. Temporary Concrete Barrier
6-11. Top of Slab Elevations
12-13. Top of Approach Slab Elevations
14. Superstructure
15-17. Superstructure Details
18. Diaphragm Details
19-22. Bridge Approach Slab Details
23-24. Bridge Fence Railing, Curved
25. Preformed Joint Strip Seal
26. Drainage Scuppers, DS-11
27. Framing Plan
28-29. Steel Details
30-31. Bearing Details
32-33. Concrete Removal Details
34-38. Pier Repair Details
39. Bar Splicer Assembly and Mechanical Splicer Details

TOTAL BILL OF MATERIAL

ITEM	UNIT	SUPER	SUB	TOTAL
Removal of Existing Superstructures No. 1	Each	1	-	1
Concrete Removal	Cu. Yd.	-	30.6	30.6
Slope Wall Removal	Sq. Yd.	-	1,028	1,028
Protective Shield	Sq. Yd.	1,323	-	1,323
Structure Excavation	Cu. Yd.	-	293	293
Concrete Structures	Cu. Yd.	-	77.5	77.5
Concrete Superstructure	Cu. Yd.	1,038.8	-	1,038.8
Bridge Deck Grooving	Sq. Yd.	2,524	-	2,524
Protective Coat	Sq. Yd.	3,735	-	3,735
Furnishing and Erecting Structural Steel	L. Sum	0.5	-	0.5
Stud Shear Connectors	Each	29,619	-	29,619
Reinforcement Bars, Epoxy Coated	Pound	211,500	12,040	223,540
Bar Splicers	Each	1,333	80	1,413
Bridge Fence Railing, Curved	Foot	847	-	847
Slope Wall 4 Inch	Sq. Yd.	-	994	994
Name Plates	Each	1	-	1
Preformed Joint Strip Seal	Foot	143	-	143
Elastomeric Bearing Assembly, Type I	Each	60	60	120
Anchor Bolts, 1"	Each	-	30	30
Anchor Bolts, 1 1/4"	Each	-	40	40
Temporary Sheet Piling	Sq. Ft.	-	286	286
Granular Backfill for Structures	Cu. Yd.	-	269	269
Epoxy Crack Injection	Foot	-	298	298
Geocomposite Wall Drain	Sq. Yd.	-	114	114
Pipe Underdrains for Structures 4"	Foot	-	179	179
Braced Excavation	Cu. Yd.	-	14	14
Concrete Wearing Surface, 5"	Sq. Yd.	448	-	448
Precast Bridge Approach Slab	Sq. Ft.	4,036	-	4,036
Bar Terminators	Each	388	-	388
Structural Repair of Concrete (Depth Equal to or Less Than 5 Inches)	Sq. Ft.	-	21	21
Drainage Scuppers, DS-11	Each	6	-	6

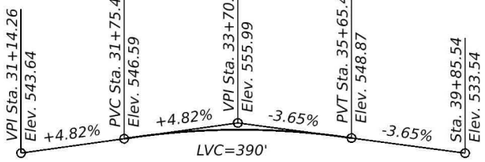

PROFILE GRADE - IL 47
(2ft off ℄ Roadway)

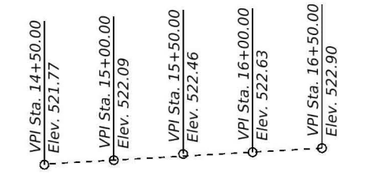

PROFILE GRADE - ARMSTRONG ST.
(Along ℄ Roadway)

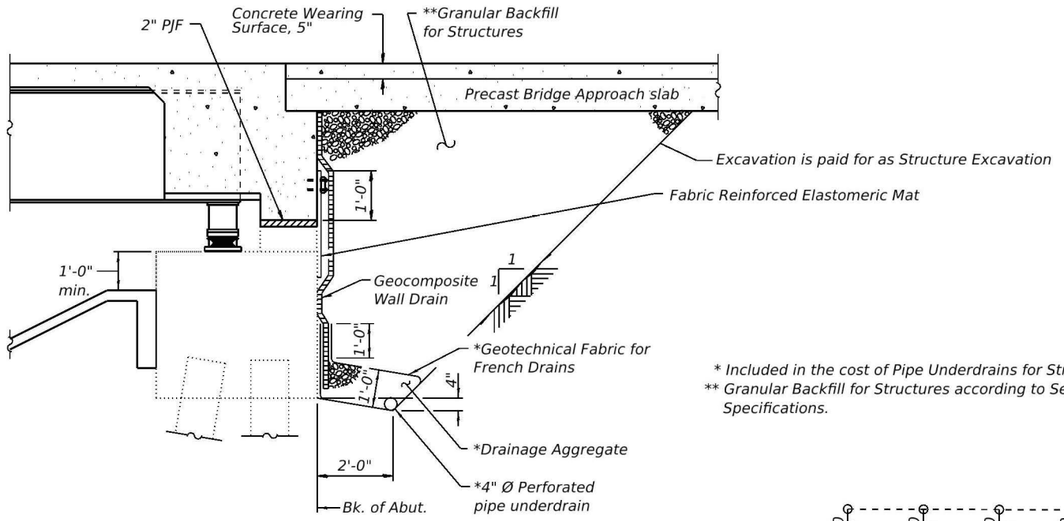

SECTION THRU SEMI-INTEGRAL ABUTMENT
(Horizontal dimensions at Rt. L's to abutment)

Note:
All drainage system components shall extend to 2'-0" from the end of each wingwall except an outlet pipe shall extend until intersecting with the side slopes. The pipes shall drain into concrete headwalls. (See Article 601.05 of the Standard Specifications and Highway Standard 601101).

* Included in the cost of Pipe Underdrains for Structures.
** Granular Backfill for Structures according to Section 586 of the Standard Specifications.



PROFILE GRADE - CSX TRANSPORTATION, INC.
(Top of S. Rail)

STA. 34+05.65
BUILT BY
STATE OF ILLINOIS
F.A.P. RT. 326 SEC. (111HVB1)ES
LOADING HL-93
STR. NO. 032-0086

NAME PLATE
See Std. 515001

Existing Name Plate shall be cleaned and relocated next to new Name Plate. Cost included with Name Plates.

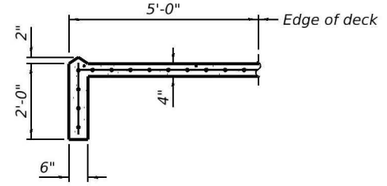

SECTION A-A

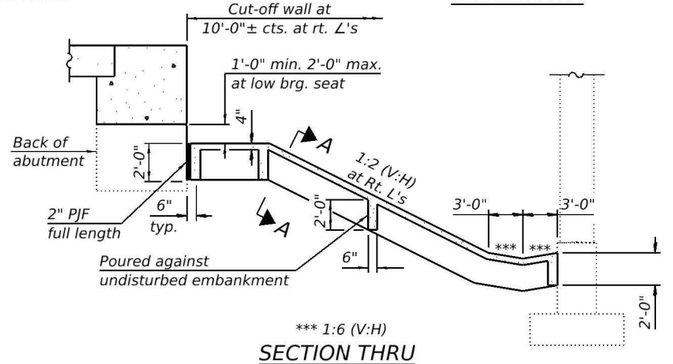

*** 1:6 (V:H)

SECTION THRU CONCRETE SLOPEWALL

Slope wall shall be reinforced with welded wire fabric, 6 in. x 6 in. – W4.0 x W4.0, weighing 58 lbs. per 100 sq. ft.

MODEL: Br_Sheet_Consultant
FILE NAME: E:\2410-1\struct\Final Design\CADD (ORD)\CADD_Sheets\0320086-66M30-002-GenData.dgn

LIN ENGINEERING,LTD.
Consulting Engineers
Springfield, Illinois

USER NAME = Mike Haley	DESIGNED - CZ	REVISED -	STATE OF ILLINOIS DEPARTMENT OF TRANSPORTATION	GENERAL DATA STRUCTURE NO. 032-0086
	DRAWN - SJH	REVISED -		
PLOT SCALE = $SCALE$	CHECKED - MTH	REVISED -		SHEET 2 OF 39 SHEETS
PLOT DATE = 8/12/2026	CHECK DATE - 10/2025	REVISED -		

F.A.P. RTE.	SECTION	COUNTY	TOTAL SHEETS	SHEET NO.
326	(111HVB1)ES	GRUNDY	137	53
		CONTRACT NO. 66M30		
		ILLINOIS	FED. AID PROJECT	

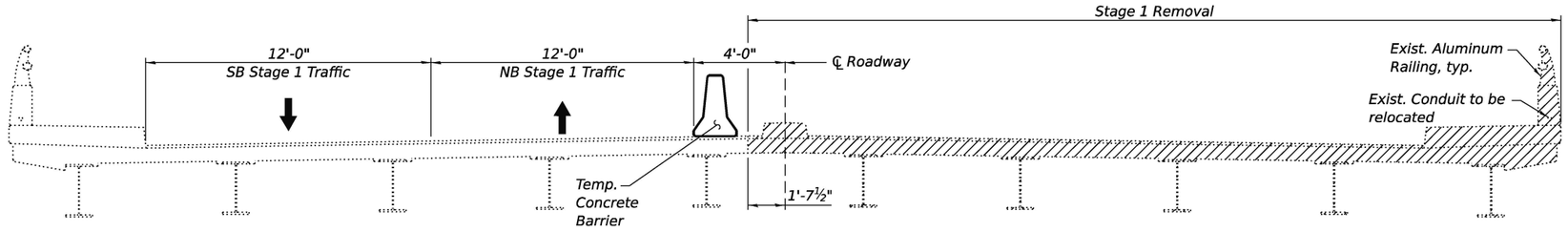

STAGE 1 REMOVAL

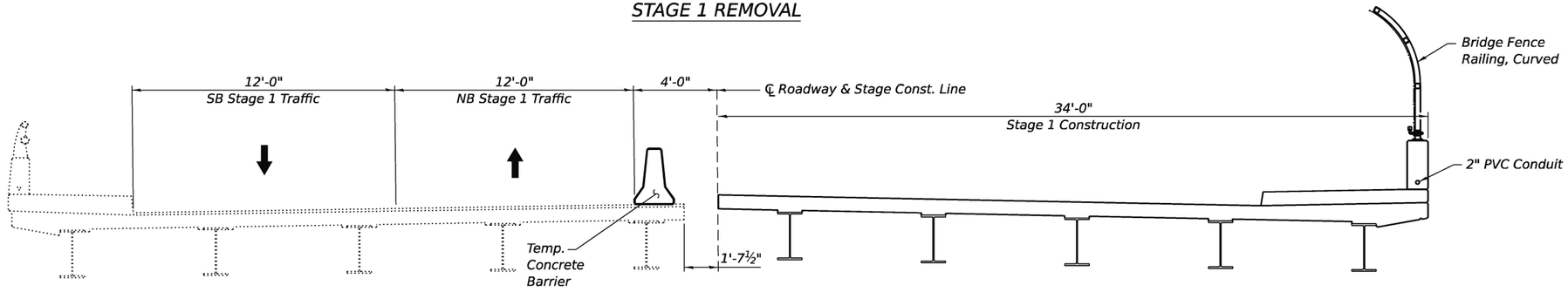

STAGE 1 CONSTRUCTION

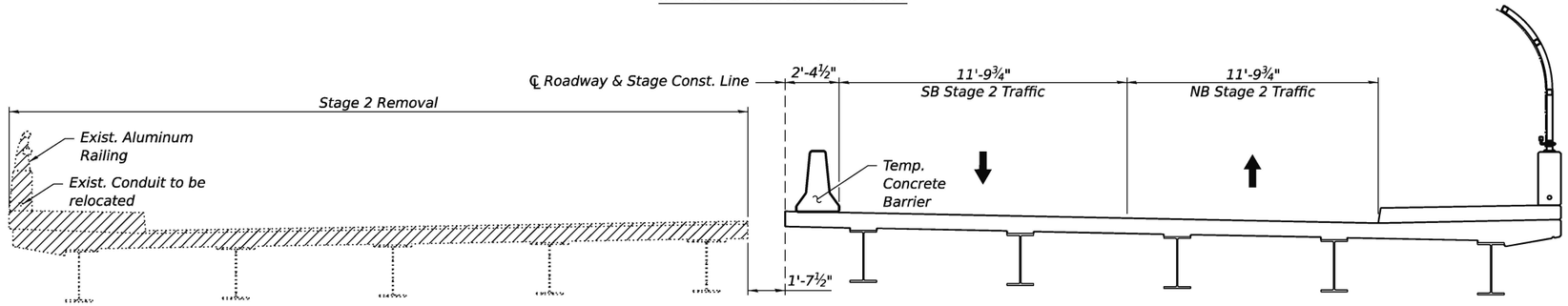

STAGE 2 REMOVAL

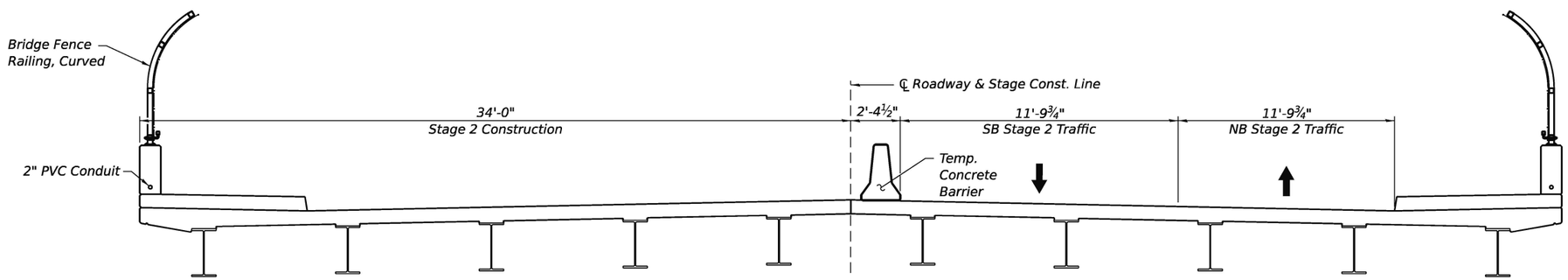

STAGE 2 CONSTRUCTION

Notes:
All sections are looking North.
Hatching represents limits of removal.
See sheet 5 of 39 for Temporary Concrete Barrier.
See Roadway plans for quantity of Temporary Concrete Barrier.
Cost of removal of existing aluminum railing and wearing surface is included with Removal of Existing Superstructure No. 1.

(Sheet 1 of 2)

MODEL: Br_Sheet_Consultant
FILE NAME: E:\2410-1\struct\Final Design\CADD (ORD)\CADD_Sheets\0320086-66M30-003-SigConstDtls1.dgn

LIN ENGINEERING,LTD.
Consulting Engineers
Springfield, Illinois

USER NAME = LIN03-PC	DESIGNED - CZ	REVISED -
	DRAWN - SJH	REVISED -
PLOT SCALE = $SCALE$	CHECKED - MTH	REVISED -
PLOT DATE = 6/19/2026	CHECK DATE - 10/2025	REVISED -

STATE OF ILLINOIS
DEPARTMENT OF TRANSPORTATION

STAGE CONSTRUCTION DETAILS
STRUCTURE NO. 032-0086
SHEET 3 OF 39 SHEETS

F.A.P. RTE.	SECTION	COUNTY	TOTAL SHEETS	SHEET NO.
326	(111HVB1)ES	GRUNDY	137	54
		CONTRACT NO. 66M30		
	ILLINOIS	FED. AID PROJECT		

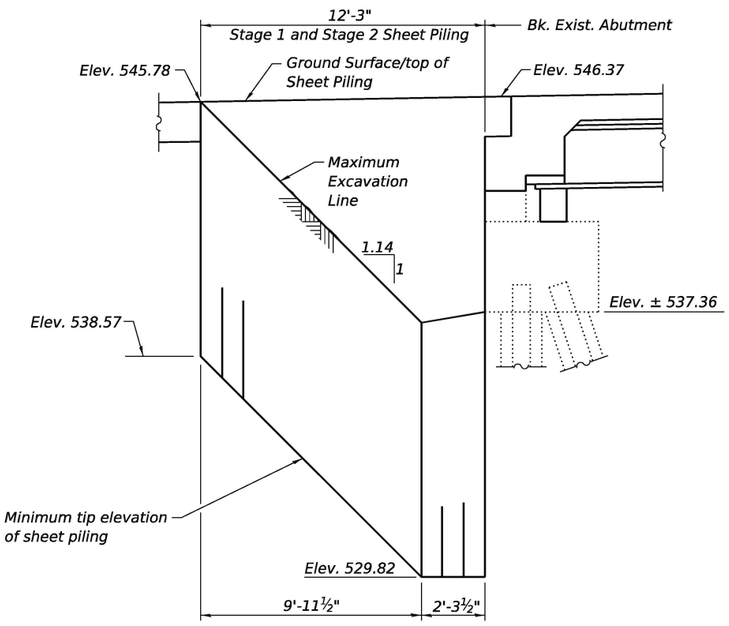

TEMPORARY SHEET PILING AT SOUTH ABUTMENT

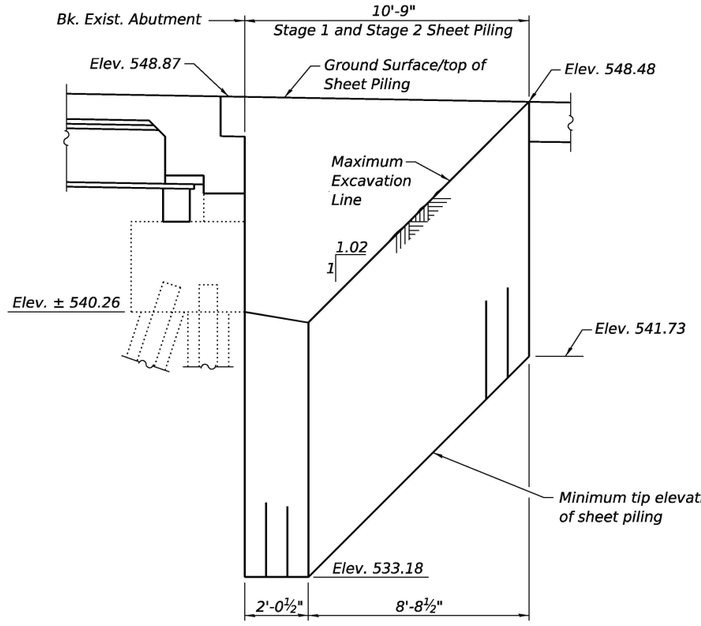

TEMPORARY SHEET PILING AT NORTH ABUTMENT

Notes:
If the Contractor chooses to alter the temporary cantilevered sheet piling design requirements shown on the plans, a design submittal including plan details and calculations will be required for review and acceptance by the Engineer.
Min. Section Modulus for sheeting = 5.71 in³/ft (typ.).

MODEL: Br_Sheet_Consultant
FILE NAME: E:\2410-1\struct\Final Design\CADD (ORD)\CADD_Sheets\0320086-66M30-004-SigConstDtls2.dgn

LIN ENGINEERING,LTD. Consulting Engineers Springfield, Illinois	USER NAME = LIN03-PC	DESIGNED - CZ	REVISED -	STATE OF ILLINOIS DEPARTMENT OF TRANSPORTATION	STAGE CONSTRUCTION DETAILS STRUCTURE NO. 032-0086
		DRAWN - SJH	REVISED -		
	PLOT SCALE = $SCALE$	CHECKED - MTH	REVISED -		
	PLOT DATE = 6/5/2026	CHECK DATE - 10/2025	REVISED -		SHEET 4 OF 39 SHEETS

F.A.P. RTE.	SECTION	COUNTY	TOTAL SHEETS	SHEET NO.
326	(111HVB1)ES	GRUNDY	137	55
		CONTRACT NO. 66M30		
		ILLINOIS	FED. AID PROJECT	

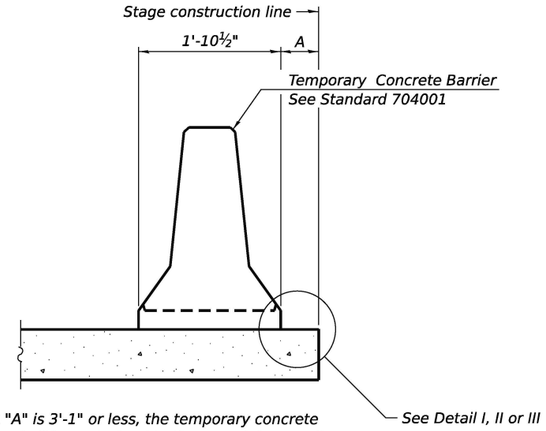

When "A" is 3'-1" or less, the temporary concrete barrier shall be restrained to the new slab according to Detail I, II or III. No restraint is required when "A" is greater than 3'-1".

NEW SLAB OR NEW DECK BEAM

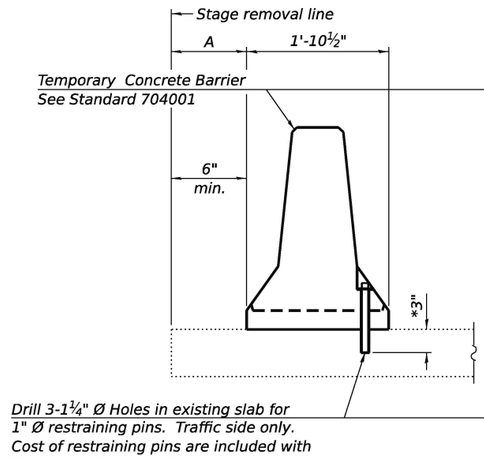

Drill 3-1¼" Ø Holes in existing slab for 1" Ø restraining pins. Traffic side only. Cost of restraining pins are included with Temporary Concrete Barrier. No restraint is required when "A" is greater than 3'-1".

EXISTING SLAB

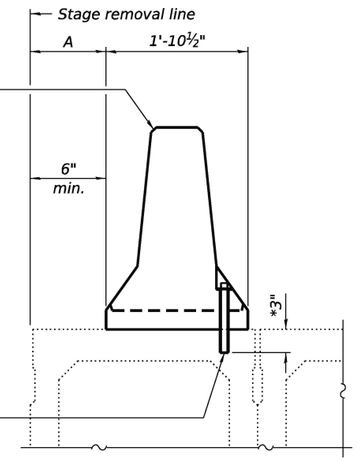

* When hot-mix asphalt wearing surface is present, embedment shall be 3" plus the wearing surface depth.

EXISTING DECK BEAM

SECTIONS THRU SLAB OR DECK BEAM

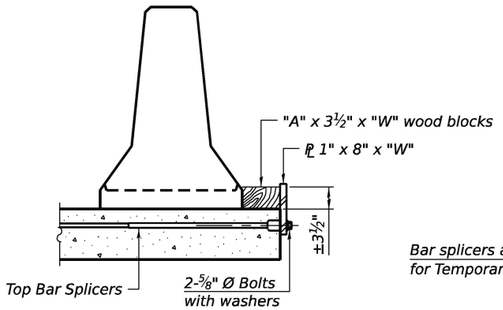

DETAIL I

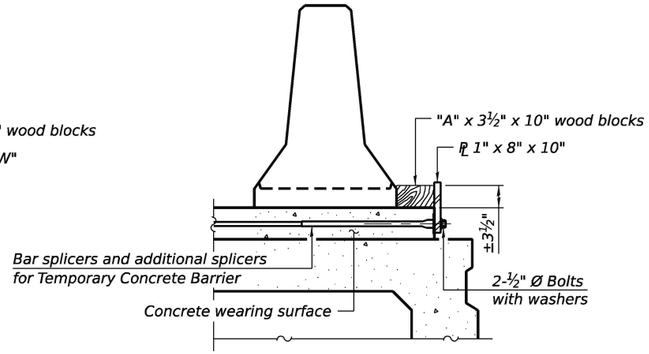

DETAIL II

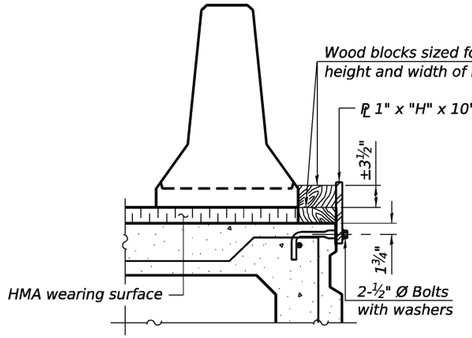

DETAIL III

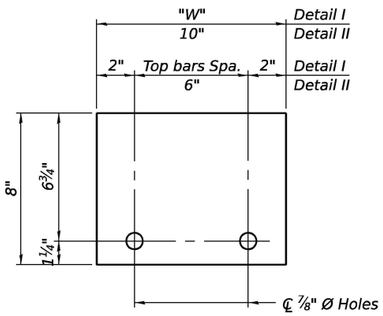

STEEL RETAINER ℄ 1" x 8" x "W"
(Detail I and II)

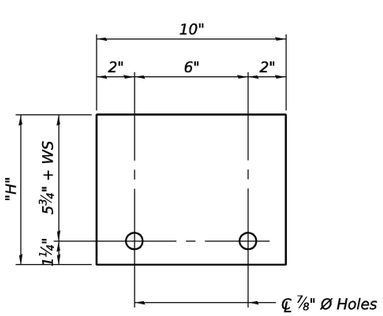

STEEL RETAINER ℄ 1" x "H" x 10"
(Detail III)

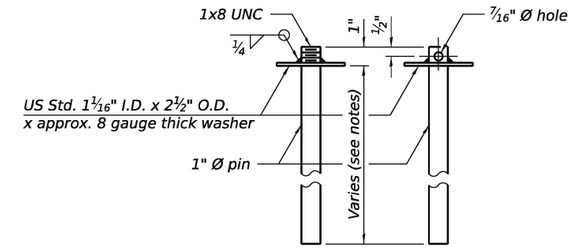

RESTRAINING PIN

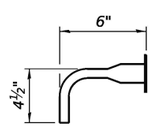

BAR SPLICER FOR #4 BAR - DETAIL III

Notes:

Cost of retainer assembly is included with Temporary Concrete Barrier.

A retainer assembly shall be located at the approximate ℄ of each temporary concrete barrier.

The retainer plate shall not be removed until the concrete on the adjacent stage is ready to be poured. For Detail III applications the retainer plate shall not be removed until just prior to placing the adjacent beam.

When the 'A' dimension is less than 1½", the wood block shall be omitted and the barrier shall be placed in direct contact with the steel retainer plate. For deck beam applications the minimum required 'A' distance is 6" to accommodate the shear key clamping device.

Detail I - Installation for a new bridge deck or bridge slab.

Detail II - Installation for a new deck beam with an initial concrete wearing surface. Additional bar splicers shall be provided at 6'-0" centers and paired with the bar splicers of the concrete wearing surface reinforcement to accommodate the installation of the retainer assemblies. The cost of the additional bar splicers is included with the concrete wearing surface.

Detail III - Installation for a new deck beam with no initial wearing surface or with an initial hot-mix asphalt (HMA) wearing surface present. The deck beam directly beneath the temporary concrete barrier shall be fabricated with bar splicer inserts in the side of the beam, as detailed, to accommodate the installation of the retainer assemblies. A pair of bar splicers, 6" apart, shall be placed at 6'-0" centers along the length of the beam. The cost of the bar splicers is included with the deck beam.

RAILING CRITERIA

NCHRP 350 Test Level	3
Railing Weight (plf)	440

R-27

5-15-2023

MODEL: Br_Sheet_Consultant
FILE NAME: E:\2410-1\struct\Final Design\CADD (ORD)\CADD_Sheets\0320086-66M30-005-TempConcBarrier.dgn

LIN ENGINEERING,LTD.
Consulting Engineers
Springfield, Illinois

USER NAME = LIN03-PC	DESIGNED - CZ	REVISED -	
	DRAWN - SJH	REVISED -	
PLOT SCALE = $SCALE$	CHECKED - MTH	REVISED -	
PLOT DATE = 6/19/2026	CHECK DATE - 10/2025	REVISED -	

STATE OF ILLINOIS
DEPARTMENT OF TRANSPORTATION

TEMPORARY CONCRETE BARRIER
STRUCTURE NO. 032-0086

SHEET 5 OF 39 SHEETS

F.A.P. RTE.	SECTION	COUNTY	TOTAL SHEETS	SHEET NO.
326	(111HVB1)ES	GRUNDY	137	56
		CONTRACT NO. 66M30		
	ILLINOIS FED. AID PROJECT			

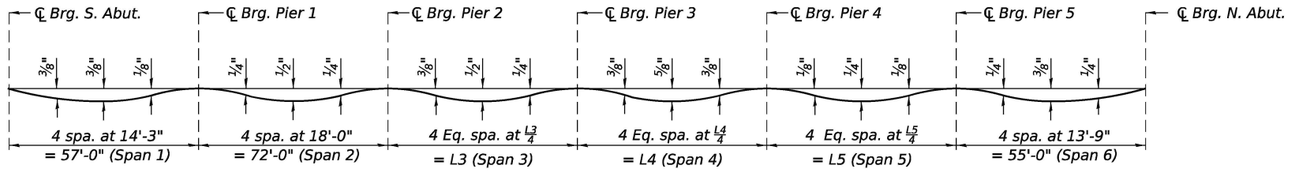

DEAD LOAD DEFLECTION DIAGRAM

(Includes weight of concrete only)

Note:
The above deflections are not to be used in the field if the engineer is working from the grade elevations adjusted for dead load deflections as shown on sheets 7 thru 11 of 39.

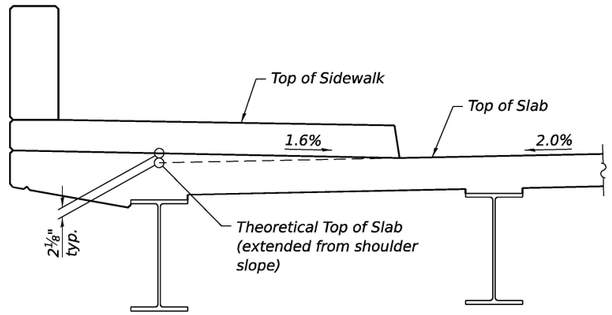

DETAIL AT SIDEWALK

Elevations at Beams 1 and 10 are provided at Theoretical Top of Slab below sidewalk as shown

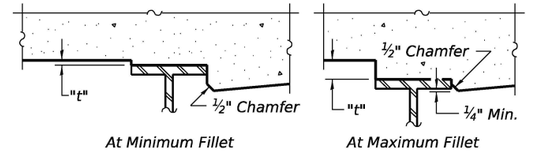

At Minimum Fillet — At Maximum Fillet

To determine "t": After all structural steel has been erected, elevations of the top flanges of the beams shall be taken at intervals shown below. These elevations subtracted from the "Theoretical Grade Elevations Adjusted for Dead Load Deflection" shown on sheets 7 thru 11 of 39, minus slab thickness, equals the fillet heights "t" above top flange of beams.

FILLET HEIGHTS

DIMENSION TABLE

Beam	A	B	C	D	E	F	L3	L4	L5	L	X3	X4	X5
1	7	70'-0"	7	70'-0"	6	60'-0"	76'-0¼"	75'-8⅛"	66'-5⅜"	402'-1⅝"	6'-0¼"	5'-8⅛"	6'-5⅜"
2	7	70'-0"	6	60'-0"	6	60'-0"	75'-1½"	74'-10¼"	65'-8⅛"	399'-7⅞"	5'-1½"	14'-10¼"	5'-8⅛"
3	6	60'-0"	6	60'-0"	5	50'-0"	74'-2¾"	74'-0½"	64'-11"	397'-2¼"	14'-2¾"	14'-0½"	14'-11"
4	6	60'-0"	6	60'-0"	5	50'-0"	73'-4⅛"	73'-2¾"	64'-1¾"	394'-8½"	13'-4⅛"	13'-2¾"	14'-1¾"
5	6	60'-0"	6	60'-0"	5	50'-0"	72'-5⅜"	72'-4⅞"	63'-4⅜"	392'-2⅞"	12'-5⅜"	12'-4⅞"	13'-4⅜"
6	6	60'-0"	6	60'-0"	5	50'-0"	71'-6⅝"	71'-7⅛"	62'-7⅜"	389'-9⅛"	11'-6⅝"	11'-7⅛"	12'-7⅜"
7	6	60'-0"	6	60'-0"	5	50'-0"	70'-7⅞"	70'-9¼"	61'-10¼"	387'-3½"	10'-7⅞"	10'-9¼"	11'-10¼"
8	6	60'-0"	6	60'-0"	5	50'-0"	69'-9¼"	69'-11½"	61'-1"	384'-9¾"	9'-9¼"	9'-11½"	11'-1"
9	6	60'-0"	6	60'-0"	5	50'-0"	68'-10½"	69'-1¾"	60'-3⅞"	382'-4⅛"	8'-10½"	9'-1¾"	10'-3⅞"
10	6	60'-0"	6	60'-0"	5	50'-0"	67'-11¾"	68'-3⅞"	59'-6⅝"	379'-10⅜"	7'-11¾"	8'-3⅞"	9'-6⅝"

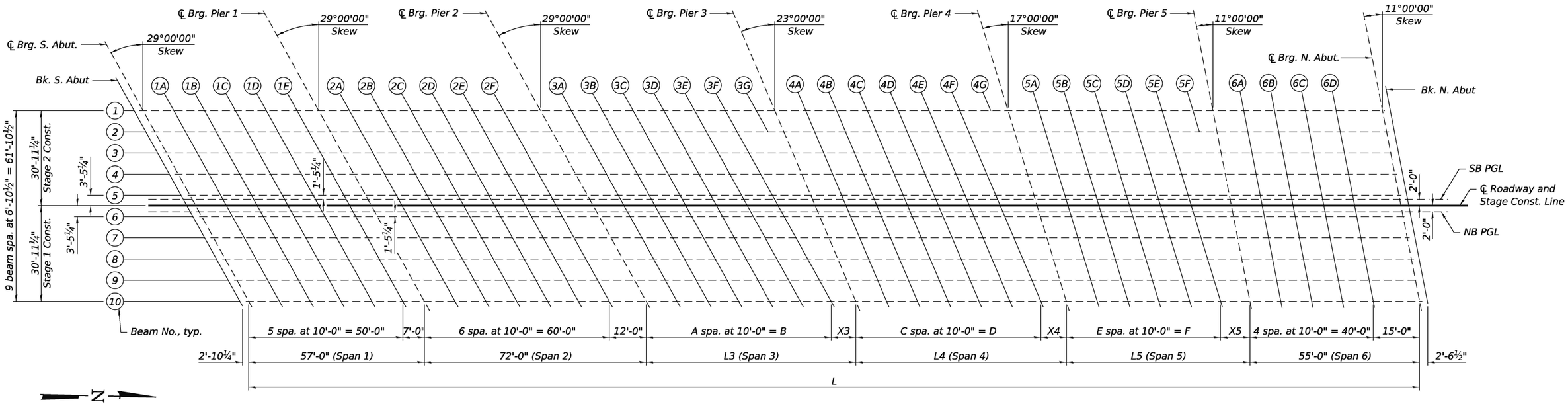

PLAN

MODEL: Br_Sheet_Consultant
FILE NAME: E:\2410-1\struct\Final Design\CADD (ORD)\CADD_Sheets\0320086-66M30-006-TOSElevs1.dgn

LIN ENGINEERING, LTD. Consulting Engineers Springfield, Illinois	USER NAME = Lin10-PC	DESIGNED - CZ	REVISED -	STATE OF ILLINOIS DEPARTMENT OF TRANSPORTATION
		DRAWN - SJH	REVISED -	
	PLOT SCALE = $SCALE$	CHECKED - MTH	REVISED -	
	PLOT DATE = 6/5/2026	CHECK DATE - 10/2025	REVISED -	

TOP OF SLAB ELEVATIONS
STRUCTURE NO. 032-0086
SHEET 6 OF 39 SHEETS

F.A.P. RTE.	SECTION	COUNTY	TOTAL SHEETS	SHEET NO.
326	(111HVB1)ES	GRUNDY	137	57
		CONTRACT NO. 66M30		
	ILLINOIS	FED. AID PROJECT		

BEAM 1

Location	Station	Offset	Theoretical Grade Elevations	Theoretical Grade Elevations Adjusted For Dead Load Deflection
Bk. S. Abut.	31+53.00	-30.94	544.93	544.93
℄ Brg. S. Abut.	31+55.85	-30.94	545.07	545.07
1A	31+65.85	-30.94	545.55	545.57
1B	31+75.85	-30.94	546.03	546.07
1C	31+85.85	-30.94	546.50	546.53
1D	31+95.85	-30.94	546.95	546.97
1E	32+05.85	-30.94	547.37	547.38
℄ Brg. Pier 1	32+12.85	-30.94	547.66	547.66
2A	32+22.85	-30.94	548.05	548.06
2B	32+32.85	-30.94	548.42	548.45
2C	32+42.85	-30.94	548.77	548.81
2D	32+52.85	-30.94	549.09	549.14
2E	32+62.85	-30.94	549.39	549.43
2F	32+72.85	-30.94	549.67	549.69
℄ Brg. Pier 2	32+84.85	-30.94	549.98	549.98
3A	32+94.85	-30.94	550.22	550.23
3B	33+04.85	-30.94	550.43	550.47
3C	33+14.85	-30.94	550.62	550.68
3D	33+24.85	-30.94	550.79	550.85
3E	33+34.85	-30.94	550.93	550.98
3F	33+44.85	-30.94	551.06	551.09
3G	33+54.85	-30.94	551.16	551.17
℄ Brg. Pier 3	33+60.87	-30.94	551.21	551.21
4A	33+70.87	-30.94	551.28	551.30
4B	33+80.87	-30.94	551.33	551.37
4C	33+90.87	-30.94	551.36	551.41
4D	34+00.87	-30.94	551.36	551.42
4E	34+10.87	-30.94	551.34	551.40
4F	34+20.87	-30.94	551.30	551.33
4G	34+30.87	-30.94	551.24	551.25
℄ Brg. Pier 4	34+36.54	-30.94	551.19	551.19
5A	34+46.54	-30.94	551.10	551.10
5B	34+56.54	-30.94	550.98	551.00
5C	34+66.54	-30.94	550.84	550.87
5D	34+76.54	-30.94	550.68	550.71
5E	34+86.54	-30.94	550.50	550.51
5F	34+96.54	-30.94	550.29	550.30
℄ Brg. Pier 5	35+02.99	-30.94	550.15	550.15
6A	35+12.99	-30.94	549.91	549.92
6B	35+22.99	-30.94	549.65	549.68
6C	35+32.99	-30.94	549.36	549.40
6D	35+42.99	-30.94	549.06	549.09
℄ Brg. N. Abut.	35+57.99	-30.94	548.56	548.56
Bk. N. Abut.	35+60.54	-30.94	548.47	548.47

BEAM 2

Location	Station	Offset	Theoretical Grade Elevations	Theoretical Grade Elevations Adjusted For Dead Load Deflection
Bk. S. Abut.	31+56.81	-24.06	545.25	545.25
℄ Brg. S. Abut.	31+59.66	-24.06	545.39	545.39
1A	31+69.66	-24.06	545.87	545.89
1B	31+79.66	-24.06	546.35	546.38
1C	31+89.66	-24.06	546.81	546.84
1D	31+99.66	-24.06	547.25	547.27
1E	32+09.66	-24.06	547.67	547.67
℄ Brg. Pier 1	32+16.66	-24.06	547.95	547.95
2A	32+26.66	-24.06	548.33	548.34
2B	32+36.66	-24.06	548.69	548.72
2C	32+46.66	-24.06	549.03	549.07
2D	32+56.66	-24.06	549.35	549.39
2E	32+66.66	-24.06	549.64	549.67
2F	32+76.66	-24.06	549.91	549.93
℄ Brg. Pier 2	32+88.66	-24.06	550.21	550.21
3A	32+98.66	-24.06	550.44	550.45
3B	33+08.66	-24.06	550.64	550.67
3C	33+18.66	-24.06	550.82	550.87
3D	33+28.66	-24.06	550.98	551.03
3E	33+38.66	-24.06	551.12	551.16
3F	33+48.66	-24.06	551.24	551.26
3G	33+58.66	-24.06	551.33	551.34
℄ Brg. Pier 3	33+63.79	-24.06	551.37	551.37
4A	33+73.79	-24.06	551.44	551.45
4B	33+83.79	-24.06	551.48	551.51
4C	33+93.79	-24.06	551.50	551.55
4D	34+03.79	-24.06	551.49	551.55
4E	34+13.79	-24.06	551.47	551.51
4F	34+23.79	-24.06	551.42	551.45
4G	-	-	-	-
℄ Brg. Pier 4	34+38.64	-24.06	551.31	551.31
5A	34+48.64	-24.06	551.21	551.22
5B	34+58.64	-24.06	551.09	551.10
5C	34+68.64	-24.06	550.95	550.97
5D	34+78.64	-24.06	550.78	550.80
5E	34+88.64	-24.06	550.59	550.60
5F	34+98.64	-24.06	550.38	550.39
℄ Brg. Pier 5	35+04.32	-24.06	550.26	550.26
6A	35+14.32	-24.06	550.01	550.02
6B	35+24.32	-24.06	549.75	549.77
6C	35+34.32	-24.06	549.46	549.49
6D	35+44.32	-24.06	549.15	549.18
℄ Brg. N. Abut.	35+59.32	-24.06	548.65	548.65
Bk. N. Abut.	35+61.87	-24.06	548.56	548.56

BEAM 3

Location	Station	Offset	Theoretical Grade Elevations	Theoretical Grade Elevations Adjusted For Dead Load Deflection
Bk. S. Abut.	31+60.62	-17.19	545.57	545.57
℄ Brg. S. Abut.	31+63.47	-17.19	545.71	545.71
1A	31+73.47	-17.19	546.19	546.21
1B	31+83.47	-17.19	546.66	546.70
1C	31+93.47	-17.19	547.12	547.15
1D	32+03.47	-17.19	547.55	547.57
1E	32+13.47	-17.19	547.96	547.96
℄ Brg. Pier 1	32+20.47	-17.19	548.23	548.23
2A	32+30.47	-17.19	548.61	548.62
2B	32+40.47	-17.19	548.96	548.99
2C	32+50.47	-17.19	549.29	549.33
2D	32+60.47	-17.19	549.60	549.64
2E	32+70.47	-17.19	549.88	549.91
2F	32+80.47	-17.19	550.15	550.16
℄ Brg. Pier 2	32+92.47	-17.19	550.44	550.44
3A	33+02.47	-17.19	550.66	550.67
3B	33+12.47	-17.19	550.85	550.88
3C	33+22.47	-17.19	551.02	551.07
3D	33+32.47	-17.19	551.18	551.22
3E	33+42.47	-17.19	551.31	551.34
3F	33+52.47	-17.19	551.42	551.43
3G	-	-	-	-
℄ Brg. Pier 3	33+66.70	-17.19	551.53	551.53
4A	33+76.70	-17.19	551.59	551.60
4B	33+86.70	-17.19	551.62	551.65
4C	33+96.70	-17.19	551.63	551.68
4D	34+06.70	-17.19	551.63	551.68
4E	34+16.70	-17.19	551.59	551.64
4F	34+26.70	-17.19	551.54	551.57
4G	-	-	-	-
℄ Brg. Pier 4	34+40.75	-17.19	551.43	551.43
5A	34+50.75	-17.19	551.33	551.33
5B	34+60.75	-17.19	551.20	551.21
5C	34+70.75	-17.19	551.05	551.07
5D	34+80.75	-17.19	550.88	550.90
5E	34+90.75	-17.19	550.69	550.70
5F	-	-	-	-
℄ Brg. Pier 5	35+05.66	-17.19	550.36	550.36
6A	35+15.66	-17.19	550.12	550.13
6B	35+25.66	-17.19	549.85	549.87
6C	35+35.66	-17.19	549.56	549.59
6D	35+45.66	-17.19	549.25	549.28
℄ Brg. N. Abut.	35+60.66	-17.19	548.74	548.74
Bk. N. Abut.	35+63.21	-17.19	548.65	548.65

Note:
Offsets are measured from ℄ roadway.

MODEL: Br_Sheet_Consultant
FILE NAME: \\192.168.0.53\ilnjobs\22410-1\struct\Final Design\CADD (ORD)\CADD_Sheets\0320086-66M30-007-TOSElevs2.dgn

LIN ENGINEERING,LTD.
Consulting Engineers
Springfield, Illinois

USER NAME = Lin10-PC	DESIGNED - CZ	REVISED -	
	DRAWN - SJH	REVISED -	
PLOT SCALE = $SCALE$	CHECKED - MTH	REVISED -	
PLOT DATE = 6/4/2026	CHECK DATE - 10/2025	REVISED -	

STATE OF ILLINOIS
DEPARTMENT OF TRANSPORTATION

TOP OF SLAB ELEVATIONS
STRUCTURE NO. 032-0086
SHEET 7 OF 39 SHEETS

F.A.P. RTE.	SECTION	COUNTY	TOTAL SHEETS	SHEET NO.
326	(111HVB1)ES	GRUNDY	137	58
		CONTRACT NO. 66M30		
	ILLINOIS	FED. AID PROJECT		

BEAM 4

Location	Station	Offset	Theoretical Grade Elevations	Theoretical Grade Elevations Adjusted For Dead Load Deflection
Bk. S. Abut.	31+64.43	-10.31	545.89	545.89
℄ Brg. S. Abut.	31+67.28	-10.31	546.03	546.03
1A	31+77.28	-10.31	546.51	546.53
1B	31+87.28	-10.31	546.98	547.01
1C	31+97.28	-10.31	547.42	547.45
1D	32+07.28	-10.31	547.85	547.86
1E	32+17.28	-10.31	548.25	548.25
℄ Brg. Pier 1	32+24.28	-10.31	548.52	548.52
		-10.31		
2A	32+34.28	-10.31	548.88	548.89
2B	32+44.28	-10.31	549.23	549.25
2C	32+54.28	-10.31	549.55	549.58
2D	32+64.28	-10.31	549.85	549.88
2E	32+74.28	-10.31	550.13	550.15
2F	32+84.28	-10.31	550.38	550.39
℄ Brg. Pier 2	32+96.28	-10.31	550.66	550.66
3A	33+06.28	-10.31	550.87	550.88
3B	33+16.28	-10.31	551.06	551.08
3C	33+26.28	-10.31	551.22	551.26
3D	33+36.28	-10.31	551.37	551.40
3E	33+46.28	-10.31	551.49	551.52
3F	33+56.28	-10.31	551.59	551.60
3G	-	-	-	-
℄ Brg. Pier 3	33+69.62	-10.31	551.69	551.69
4A	33+79.62	-10.31	551.74	551.75
4B	33+89.62	-10.31	551.77	551.79
4C	33+99.62	-10.31	551.77	551.81
4D	34+09.62	-10.31	551.76	551.80
4E	34+19.62	-10.31	551.72	551.76
4F	34+29.62	-10.31	551.66	551.68
4G	-	-	-	-
℄ Brg. Pier 4	34+42.85	-10.31	551.55	551.55
5A	34+52.85	-10.31	551.44	551.44
5B	34+62.85	-10.31	551.31	551.32
5C	34+72.85	-10.31	551.15	551.17
5D	34+82.85	-10.31	550.98	550.99
5E	34+92.85	-10.31	550.78	550.79
5F	-	-	-	-
℄ Brg. Pier 5	35+07.00	-10.31	550.47	550.47
6A	35+17.00	-10.31	550.22	550.23
6B	35+27.00	-10.31	549.95	549.97
6C	35+37.00	-10.31	549.66	549.69
6D	35+47.00	-10.31	549.34	549.37
℄ Brg. N. Abut.	35+62.00	-10.31	548.83	548.83
Bk. N. Abut.	35+64.55	-10.31	548.74	548.74

BEAM 5

Location	Station	Offset	Theoretical Grade Elevations	Theoretical Grade Elevations Adjusted For Dead Load Deflection
Bk. S. Abut.	31+68.24	-3.44	546.21	546.21
℄ Brg. S. Abut.	31+71.09	-3.44	546.35	546.35
1A	31+81.09	-3.44	546.83	546.85
1B	31+91.09	-3.44	547.29	547.32
1C	32+01.09	-3.44	547.72	547.75
1D	32+11.09	-3.44	548.14	548.16
1E	32+21.09	-3.44	548.53	548.54
℄ Brg. Pier 1	32+28.09	-3.44	548.80	548.80
		-3.44		
2A	32+38.09	-3.44	549.15	549.16
2B	32+48.09	-3.44	549.49	549.51
2C	32+58.09	-3.44	549.80	549.84
2D	32+68.09	-3.44	550.09	550.13
2E	32+78.09	-3.44	550.36	550.39
2F	32+88.09	-3.44	550.61	550.62
℄ Brg. Pier 2	33+00.09	-3.44	550.88	550.88
3A	33+10.09	-3.44	551.08	551.09
3B	33+20.09	-3.44	551.26	551.28
3C	33+30.09	-3.44	551.42	551.45
3D	33+40.09	-3.44	551.55	551.59
3E	33+50.09	-3.44	551.67	551.69
3F	33+60.09	-3.44	551.76	551.77
3G	-	-	-	-
℄ Brg. Pier 3	33+72.54	-3.44	551.84	551.84
4A	33+82.54	-3.44	551.89	551.90
4B	33+92.54	-3.44	551.91	551.94
4C	34+02.54	-3.44	551.91	551.95
4D	34+12.54	-3.44	551.89	551.93
4E	34+22.54	-3.44	551.84	551.88
4F	34+32.54	-3.44	551.78	551.79
4G	-	-	-	-
℄ Brg. Pier 4	34+44.95	-3.44	551.66	551.66
5A	34+54.95	-3.44	551.55	551.55
5B	34+64.95	-3.44	551.41	551.42
5C	34+74.95	-3.44	551.26	551.27
5D	34+84.95	-3.44	551.08	551.09
5E	34+94.95	-3.44	550.88	550.88
5F	-	-	-	-
℄ Brg. Pier 5	35+08.33	-3.44	550.57	550.57
6A	35+18.33	-3.44	550.32	550.33
6B	35+28.33	-3.44	550.05	550.07
6C	35+38.33	-3.44	549.75	549.78
6D	35+48.33	-3.44	549.44	549.46
℄ Brg. N. Abut.	35+63.33	-3.44	548.92	548.92
Bk. N. Abut.	35+65.88	-3.44	548.83	548.83

SB PGL

Location	Station	Offset	Theoretical Grade Elevations	Theoretical Grade Elevations Adjusted For Dead Load Deflection
Bk. S. Abut.	31+69.04	-2.00	546.28	546.28
℄ Brg. S. Abut.	31+71.89	-2.00	546.42	546.42
1A	31+81.89	-2.00	546.89	546.91
1B	31+91.89	-2.00	547.35	547.38
1C	32+01.89	-2.00	547.79	547.81
1D	32+11.89	-2.00	548.20	548.22
1E	32+21.89	-2.00	548.59	548.60
℄ Brg. Pier 1	32+28.89	-2.00	548.85	548.85
		-2.00		
2A	32+38.89	-2.00	549.21	549.22
2B	32+48.89	-2.00	549.54	549.57
2C	32+58.89	-2.00	549.85	549.89
2D	32+68.89	-2.00	550.14	550.18
2E	32+78.89	-2.00	550.41	550.44
2F	32+88.89	-2.00	550.66	550.67
℄ Brg. Pier 2	33+00.89	-2.00	550.93	550.93
3A	33+10.89	-2.00	551.13	551.13
3B	33+20.89	-2.00	551.30	551.33
3C	33+30.89	-2.00	551.46	551.49
3D	33+40.89	-2.00	551.59	551.63
3E	33+50.89	-2.00	551.70	551.73
3F	33+60.89	-2.00	551.79	551.80
3G	-	-	-	-
℄ Brg. Pier 3	33+73.15	-2.00	551.87	551.87
4A	33+83.15	-2.00	551.92	551.93
4B	33+93.15	-2.00	551.94	551.97
4C	34+03.15	-2.00	551.94	551.98
4D	34+13.15	-2.00	551.91	551.96
4E	34+23.15	-2.00	551.87	551.90
4F	34+33.15	-2.00	551.80	551.82
4G	-	-	-	-
℄ Brg. Pier 4	34+45.39	-2.00	551.69	551.69
5A	34+55.39	-2.00	551.57	551.58
5B	34+65.39	-2.00	551.44	551.45
5C	34+75.39	-2.00	551.28	551.29
5D	34+85.39	-2.00	551.10	551.11
5E	34+95.39	-2.00	550.90	550.90
5F	-	-	-	-
℄ Brg. Pier 5	35+08.61	-2.00	550.60	550.60
6A	35+18.61	-2.00	550.34	550.35
6B	35+28.61	-2.00	550.07	550.09
6C	35+38.61	-2.00	549.77	549.80
6D	35+48.61	-2.00	549.46	549.48
℄ Brg. N. Abut.	35+63.61	-2.00	548.94	548.94
Bk. N. Abut.	35+66.16	-2.00	548.85	548.85

Note:
Offsets are measured from ℄ roadway.

MODEL: Br_Sheet_Consultant
FILE NAME: E:\2410-1\struct\Final Design\CADD (ORD)\CADD_Sheets\0320086-66M30-008-TOSElevs3.dgn

LIN ENGINEERING,LTD.
Consulting Engineers
Springfield, Illinois

USER NAME = Mike Haley	DESIGNED - CZ	REVISED -	STATE OF ILLINOIS DEPARTMENT OF TRANSPORTATION	TOP OF SLAB ELEVATIONS STRUCTURE NO. 032-0086
	DRAWN - SJH	REVISED -		
PLOT SCALE = $SCALE$	CHECKED - MTH	REVISED -		
PLOT DATE = 5/19/2026	CHECK DATE - 10/2025	REVISED -		SHEET 8 OF 39 SHEETS

F.A.P. RTE.	SECTION	COUNTY	TOTAL SHEETS	SHEET NO.
326	(111HVB1)ES	GRUNDY	137	59
		CONTRACT NO. 66M30		
		ILLINOIS	FED. AID PROJECT	

℄ ROADWAY & STAGE CONSTRUCTION LINE

Location	Station	Offset	Theoretical Grade Elevations	Theoretical Grade Elevations Adjusted For Dead Load Deflection
Bk. S. Abut.	31+70.15	0.00	546.37	546.37
℄ Brg. S. Abut.	31+73.00	0.00	546.51	546.51
1A	31+83.00	0.00	546.99	547.00
1B	31+93.00	0.00	547.44	547.47
1C	32+03.00	0.00	547.87	547.90
1D	32+13.00	0.00	548.29	548.30
1E	32+23.00	0.00	548.68	548.68
℄ Brg. Pier 1	32+30.00	0.00	548.94	548.94
2A	32+40.00	0.00	549.29	549.30
2B	32+50.00	0.00	549.62	549.64
2C	32+60.00	0.00	549.93	549.97
2D	32+70.00	0.00	550.22	550.25
2E	32+80.00	0.00	550.48	550.51
2F	32+90.00	0.00	550.73	550.74
℄ Brg. Pier 2	33+02.00	0.00	550.99	550.99
3A	33+12.00	0.00	551.19	551.19
3B	33+22.00	0.00	551.36	551.38
3C	33+32.00	0.00	551.51	551.55
3D	33+42.00	0.00	551.65	551.68
3E	33+52.00	0.00	551.75	551.78
3F	33+62.00	0.00	551.84	551.85
3G	-	-	-	-
℄ Brg. Pier 3	33+74.00	0.00	551.92	551.92
4A	33+84.00	0.00	551.96	551.97
4B	33+94.00	0.00	551.98	552.01
4C	34+04.00	0.00	551.97	552.02
4D	34+14.00	0.00	551.95	551.99
4E	34+24.00	0.00	551.90	551.94
4F	34+34.00	0.00	551.83	551.85
4G	-	-	-	-
℄ Brg. Pier 4	34+46.00	0.00	551.72	551.72
5A	34+56.00	0.00	551.61	551.61
5B	34+66.00	0.00	551.47	551.48
5C	34+76.00	0.00	551.31	551.32
5D	34+86.00	0.00	551.13	551.14
5E	34+96.00	0.00	550.92	550.93
5F	-	-	-	-
℄ Brg. Pier 5	35+09.00	0.00	550.63	550.63
6A	35+19.00	0.00	550.37	550.38
6B	35+29.00	0.00	550.10	550.12
6C	35+39.00	0.00	549.80	549.83
6D	35+49.00	0.00	549.48	549.51
℄ Brg. N. Abut.	35+64.00	0.00	548.97	548.97
Bk. N. Abut.	35+66.55	0.00	548.87	548.87

NB PGL

Location	Station	Offset	Theoretical Grade Elevations	Theoretical Grade Elevations Adjusted For Dead Load Deflection
Bk. S. Abut.	31+71.26	2.00	546.39	546.39
℄ Brg. S. Abut.	31+74.11	2.00	546.52	546.52
1A	31+84.11	2.00	547.00	547.02
1B	31+94.11	2.00	547.45	547.48
1C	32+04.11	2.00	547.88	547.91
1D	32+14.11	2.00	548.29	548.31
1E	32+24.11	2.00	548.68	548.68
℄ Brg. Pier 1	32+31.11	2.00	548.94	548.94
2A	32+41.11	2.00	549.29	549.30
2B	32+51.11	2.00	549.61	549.64
2C	32+61.11	2.00	549.92	549.96
2D	32+71.11	2.00	550.21	550.24
2E	32+81.11	2.00	550.47	550.50
2F	32+91.11	2.00	550.71	550.72
℄ Brg. Pier 2	33+03.11	2.00	550.97	550.97
3A	33+13.11	2.00	551.17	551.17
3B	33+23.11	2.00	551.34	551.36
3C	33+33.11	2.00	551.49	551.52
3D	33+43.11	2.00	551.62	551.65
3E	33+53.11	2.00	551.73	551.75
3F	33+63.11	2.00	551.81	551.82
3G	-	-	-	-
℄ Brg. Pier 3	33+74.85	2.00	551.88	551.88
4A	33+84.85	2.00	551.92	551.93
4B	33+94.85	2.00	551.94	551.97
4C	34+04.85	2.00	551.93	551.97
4D	34+14.85	2.00	551.91	551.95
4E	34+24.85	2.00	551.86	551.89
4F	34+34.85	2.00	551.79	551.80
4G	-	-	-	-
℄ Brg. Pier 4	34+46.61	2.00	551.68	551.68
5A	34+56.61	2.00	551.56	551.56
5B	34+66.61	2.00	551.42	551.43
5C	34+76.61	2.00	551.26	551.27
5D	34+86.61	2.00	551.07	551.09
5E	34+96.61	2.00	550.87	550.88
5F	-	-	-	-
℄ Brg. Pier 5	35+09.39	2.00	550.58	550.58
6A	35+19.39	2.00	550.32	550.33
6B	35+29.39	2.00	550.05	550.07
6C	35+39.39	2.00	549.75	549.78
6D	35+49.39	2.00	549.43	549.46
℄ Brg. N. Abut.	35+64.39	2.00	548.91	548.91
Bk. N. Abut.	35+66.94	2.00	548.82	548.82

BEAM 6

Location	Station	Offset	Theoretical Grade Elevations	Theoretical Grade Elevations Adjusted For Dead Load Deflection
Bk. S. Abut.	31+72.06	3.44	546.40	546.40
℄ Brg. S. Abut.	31+74.91	3.44	546.53	546.53
1A	31+84.91	3.44	547.01	547.02
1B	31+94.91	3.44	547.46	547.48
1C	32+04.91	3.44	547.89	547.91
1D	32+14.91	3.44	548.29	548.31
1E	32+24.91	3.44	548.68	548.68
℄ Brg. Pier 1	32+31.91	3.44	548.94	548.94
2A	32+41.91	3.44	549.28	549.29
2B	32+51.91	3.44	549.61	549.64
2C	32+61.91	3.44	549.92	549.95
2D	32+71.91	3.44	550.20	550.24
2E	32+81.91	3.44	550.46	550.49
2F	32+91.91	3.44	550.70	550.71
℄ Brg. Pier 2	33+03.91	3.44	550.96	550.96
3A	33+13.91	3.44	551.15	551.16
3B	33+23.91	3.44	551.32	551.35
3C	33+33.91	3.44	551.47	551.50
3D	33+43.91	3.44	551.60	551.63
3E	33+53.91	3.44	551.70	551.73
3F	33+63.91	3.44	551.79	551.80
3G	-	-	-	-
℄ Brg. Pier 3	33+75.46	3.44	551.86	551.86
4A	33+85.46	3.44	551.89	551.91
4B	33+95.46	3.44	551.91	551.94
4C	34+05.46	3.44	551.90	551.94
4D	34+15.46	3.44	551.87	551.92
4E	34+25.46	3.44	551.82	551.86
4F	34+35.46	3.44	551.75	551.77
4G	-	-	-	-
℄ Brg. Pier 4	34+47.05	3.44	551.64	551.64
5A	34+57.05	3.44	551.52	551.53
5B	34+67.05	3.44	551.38	551.39
5C	34+77.05	3.44	551.22	551.24
5D	34+87.05	3.44	551.04	551.05
5E	34+97.05	3.44	550.83	550.84
5F	-	-	-	-
℄ Brg. Pier 5	35+09.67	3.44	550.54	550.54
6A	35+19.67	3.44	550.29	550.30
6B	35+29.67	3.44	550.01	550.03
6C	35+39.67	3.44	549.71	549.74
6D	35+49.67	3.44	549.39	549.42
℄ Brg. N. Abut.	35+64.67	3.44	548.87	548.87
Bk. N. Abut.	35+67.22	3.44	548.78	548.78

Note:
Offsets are measured from ℄ roadway.

MODEL: Br_Sheet_Consultant
FILE NAME: E:\2410-1\struct\Final Design\CADD (ORD)\CADD_Sheets\0320086-66M30-009-TOSElevs4.dgn

LIN ENGINEERING,LTD.
Consulting Engineers
Springfield, Illinois

USER NAME = Mike Haley	DESIGNED - CZ	REVISED -	
	DRAWN - SJH	REVISED -	
PLOT SCALE = $SCALE$	CHECKED - MTH	REVISED -	
PLOT DATE = 5/19/2026	CHECK DATE - 10/2025	REVISED -	

STATE OF ILLINOIS
DEPARTMENT OF TRANSPORTATION

TOP OF SLAB ELEVATIONS
STRUCTURE NO. 032-0086
SHEET 9 OF 39 SHEETS

F.A.P. RTE.	SECTION	COUNTY	TOTAL SHEETS	SHEET NO.
326	(111HVB1)ES	GRUNDY	137	60
		CONTRACT NO. 66M30		
	ILLINOIS	FED. AID PROJECT		

BEAM 7

Location	Station	Offset	Theoretical Grade Elevations	Theoretical Grade Elevations Adjusted For Dead Load Deflection
Bk. S. Abut.	31+75.87	10.31	546.44	546.44
℄ Brg. S. Abut.	31+78.72	10.31	546.58	546.58
1A	31+88.72	10.31	547.04	547.06
1B	31+98.72	10.31	547.49	547.51
1C	32+08.72	10.31	547.91	547.93
1D	32+18.72	10.31	548.30	548.32
1E	32+28.72	10.31	548.68	548.69
℄ Brg. Pier 1	32+35.72	10.31	548.93	548.93
2A	32+45.72	10.31	549.27	549.28
2B	32+55.72	10.31	549.59	549.62
2C	32+65.72	10.31	549.89	549.93
2D	32+75.72	10.31	550.16	550.20
2E	32+85.72	10.31	550.42	550.45
2F	32+95.72	10.31	550.65	550.66
℄ Brg. Pier 2	33+07.72	10.31	550.90	550.90
3A	33+17.72	10.31	551.08	551.09
3B	33+27.72	10.31	551.24	551.27
3C	33+37.72	10.31	551.39	551.42
3D	33+47.72	10.31	551.50	551.53
3E	33+57.72	10.31	551.60	551.62
3F	33+67.72	10.31	551.68	551.68
3G	-	-	-	-
℄ Brg. Pier 3	33+78.38	10.31	551.73	551.73
4A	33+88.38	10.31	551.76	551.77
4B	33+98.38	10.31	551.77	551.80
4C	34+08.38	10.31	551.76	551.80
4D	34+18.38	10.31	551.72	551.77
4E	34+28.38	10.31	551.67	551.70
4F	34+38.38	10.31	551.59	551.60
4G	-	-	-	-
℄ Brg. Pier 4	34+49.15	10.31	551.48	551.48
5A	34+59.15	10.31	551.36	551.36
5B	34+69.15	10.31	551.21	551.22
5C	34+79.15	10.31	551.05	551.06
5D	34+89.15	10.31	550.86	550.87
5E	34+99.15	10.31	550.65	550.65
5F	-	-	-	-
℄ Brg. Pier 5	35+11.00	10.31	550.37	550.37
6A	35+21.00	10.31	550.11	550.12
6B	35+31.00	10.31	549.83	549.86
6C	35+41.00	10.31	549.53	549.56
6D	35+51.00	10.31	549.21	549.24
℄ Brg. N. Abut.	35+66.00	10.31	548.69	548.69
Bk. N. Abut.	35+68.55	10.31	548.59	548.59

BEAM 8

Location	Station	Offset	Theoretical Grade Elevations	Theoretical Grade Elevations Adjusted For Dead Load Deflection
Bk. S. Abut.	31+79.68	17.19	546.49	546.49
℄ Brg. S. Abut.	31+82.53	17.19	546.62	546.62
1A	31+92.53	17.19	547.08	547.10
1B	32+02.53	17.19	547.51	547.54
1C	32+12.53	17.19	547.92	547.95
1D	32+22.53	17.19	548.31	548.33
1E	32+32.53	17.19	548.68	548.69
℄ Brg. Pier 1	32+39.53	17.19	548.93	548.93
2A	32+49.53	17.19	549.26	549.27
2B	32+59.53	17.19	549.57	549.60
2C	32+69.53	17.19	549.86	549.90
2D	32+79.53	17.19	550.13	550.17
2E	32+89.53	17.19	550.37	550.40
2F	32+99.53	17.19	550.59	550.61
℄ Brg. Pier 2	33+11.53	17.19	550.83	550.83
3A	33+21.53	17.19	551.01	551.02
3B	33+31.53	17.19	551.16	551.18
3C	33+41.53	17.19	551.30	551.33
3D	33+51.53	17.19	551.41	551.44
3E	33+61.53	17.19	551.50	551.52
3F	33+71.53	17.19	551.56	551.57
3G	-	-	-	-
℄ Brg. Pier 3	33+81.30	17.19	551.61	551.61
4A	33+91.30	17.19	551.63	551.64
4B	34+01.30	17.19	551.63	551.66
4C	34+11.30	17.19	551.61	551.66
4D	34+21.30	17.19	551.57	551.62
4E	34+31.30	17.19	551.51	551.54
4F	34+41.30	17.19	551.43	551.44
4G	-	-	-	-
℄ Brg. Pier 4	34+51.25	17.19	551.32	551.32
5A	34+61.25	17.19	551.19	551.19
5B	34+71.25	17.19	551.04	551.05
5C	34+81.25	17.19	550.87	550.88
5D	34+91.25	17.19	550.68	550.69
5E	35+01.25	17.19	550.46	550.47
5F	-	-	-	-
℄ Brg. Pier 5	35+12.34	17.19	550.20	550.20
6A	35+22.34	17.19	549.94	549.95
6B	35+32.34	17.19	549.66	549.68
6C	35+42.34	17.19	549.35	549.39
6D	35+52.34	17.19	549.03	549.06
℄ Brg. N. Abut.	35+67.34	17.19	548.50	548.50
Bk. N. Abut.	35+69.89	17.19	548.40	548.40

BEAM 9

Location	Station	Offset	Theoretical Grade Elevations	Theoretical Grade Elevations Adjusted For Dead Load Deflection
Bk. S. Abut.	31+83.49	24.06	546.53	546.53
℄ Brg. S. Abut.	31+86.34	24.06	546.66	546.66
1A	31+96.34	24.06	547.11	547.13
1B	32+06.34	24.06	547.53	547.56
1C	32+16.34	24.06	547.94	547.97
1D	32+26.34	24.06	548.32	548.34
1E	32+36.34	24.06	548.68	548.68
℄ Brg. Pier 1	32+43.34	24.06	548.92	548.92
2A	32+53.34	24.06	549.24	549.25
2B	32+63.34	24.06	549.55	549.58
2C	32+73.34	24.06	549.83	549.87
2D	32+83.34	24.06	550.08	550.13
2E	32+93.34	24.06	550.32	550.35
2F	33+03.34	24.06	550.54	550.55
℄ Brg. Pier 2	33+15.34	24.06	550.77	550.77
3A	33+25.34	24.06	550.93	550.94
3B	33+35.34	24.06	551.08	551.10
3C	33+45.34	24.06	551.20	551.23
3D	33+55.34	24.06	551.31	551.33
3E	33+65.34	24.06	551.39	551.40
3F	33+75.34	24.06	551.44	551.45
3G	-	-	-	-
℄ Brg. Pier 3	33+84.21	24.06	551.48	551.48
4A	33+94.21	24.06	551.50	551.51
4B	34+04.21	24.06	551.49	551.52
4C	34+14.21	24.06	551.47	551.51
4D	34+24.21	24.06	551.42	551.46
4E	34+34.21	24.06	551.35	551.38
4F	34+44.21	24.06	551.26	551.27
4G	-	-	-	-
℄ Brg. Pier 4	34+53.36	24.06	551.16	551.16
5A	34+63.36	24.06	551.03	551.03
5B	34+73.36	24.06	550.87	550.88
5C	34+83.36	24.06	550.70	550.71
5D	34+93.36	24.06	550.50	550.51
5E	35+03.36	24.06	550.28	550.28
5F	-	-	-	-
℄ Brg. Pier 5	35+13.68	24.06	550.03	550.03
6A	35+23.68	24.06	549.77	549.78
6B	35+33.68	24.06	549.48	549.51
6C	35+43.68	24.06	549.17	549.21
6D	35+53.68	24.06	548.85	548.87
℄ Brg. N. Abut.	35+68.68	24.06	548.31	548.31
Bk. N. Abut.	35+71.23	24.06	548.22	548.22

Note:
Offsets are measured from ℄ roadway.

MODEL: Br_Sheet_Consultant
FILE NAME: E:\2410-1\struct\Final Design\CADD (ORD)\CADD_Sheets\0320086-66M30-010-TOSElevs5.dgn

LIN ENGINEERING,LTD.
Consulting Engineers
Springfield, Illinois

USER NAME = Mike Haley	DESIGNED - CZ	REVISED -	
	DRAWN - SJH	REVISED -	
PLOT SCALE = $SCALE$	CHECKED - MTH	REVISED -	
PLOT DATE = 5/19/2026	CHECK DATE - 10/2025	REVISED -	

STATE OF ILLINOIS
DEPARTMENT OF TRANSPORTATION

TOP OF SLAB ELEVATIONS
STRUCTURE NO. 032-0086
SHEET 10 OF 39 SHEETS

F.A.P. RTE.	SECTION	COUNTY	TOTAL SHEETS	SHEET NO.
326	(111HVB1)ES	GRUNDY	137	61
		CONTRACT NO. 66M30		
	ILLINOIS	FED. AID PROJECT		

BEAM 10

Location	Station	Offset	Theoretical Grade Elevations	Theoretical Grade Elevations Adjusted For Dead Load Deflection
Bk. S. Abut.	31+87.30	30.94	546.57	546.57
℄ Brg. S. Abut.	31+90.15	30.94	546.69	546.69
1A	32+00.15	30.94	547.13	547.16
1B	32+10.15	30.94	547.55	547.59
1C	32+20.15	30.94	547.95	547.98
1D	32+30.15	30.94	548.32	548.34
1E	32+40.15	30.94	548.67	548.68
℄ Brg. Pier 1	32+47.15	30.94	548.91	548.91
		30.94		
2A	32+57.15	30.94	549.22	549.24
2B	32+67.15	30.94	549.52	549.55
2C	32+77.15	30.94	549.79	549.84
2D	32+87.15	30.94	550.04	550.09
2E	32+97.15	30.94	550.27	550.31
2F	33+07.15	30.94	550.48	550.49
℄ Brg. Pier 2	33+19.15	30.94	550.69	550.69
3A	33+29.15	30.94	550.85	550.86
3B	33+39.15	30.94	550.99	551.01
3C	33+49.15	30.94	551.11	551.14
3D	33+59.15	30.94	551.20	551.23
3E	33+69.15	30.94	551.27	551.29
3F	33+79.15	30.94	551.32	551.33
3G	-	-	-	-
℄ Brg. Pier 3	33+87.13	30.94	551.35	551.35
4A	33+97.13	30.94	551.36	551.37
4B	34+07.13	30.94	551.35	551.38
4C	34+17.13	30.94	551.32	551.36
4D	34+27.13	30.94	551.26	551.31
4E	34+37.13	30.94	551.19	551.22
4F	34+47.13	30.94	551.09	551.10
4G	-	-	-	-
℄ Brg. Pier 4	34+55.46	30.94	550.99	550.99
5A	34+65.46	30.94	550.86	550.86
5B	34+75.46	30.94	550.70	550.71
5C	34+85.46	30.94	550.52	550.53
5D	34+95.46	30.94	550.32	550.32
5E	35+05.46	30.94	550.09	550.09
5F	-	-	-	-
℄ Brg. Pier 5	35+15.01	30.94	549.86	549.86
6A	35+25.01	30.94	549.59	549.61
6B	35+35.01	30.94	549.30	549.34
6C	35+45.01	30.94	548.99	549.03
6D	35+55.01	30.94	548.66	548.70
℄ Brg. N. Abut.	35+70.01	30.94	548.13	548.13
Bk. N. Abut.	35+72.56	30.94	548.03	548.03

Note:
Offsets are measured from ℄ roadway.

MODEL: Br_Sheet_Consultant
FILE NAME: \\192.168.0.53\linjobs\22410-1\struct\Final Design\CADD (ORD)\CADD_Sheets\0320086-66M30-011-TOSElevs6.dgn

LIN ENGINEERING,LTD.
Consulting Engineers
Springfield, Illinois

USER NAME = LIN03-PC	DESIGNED - CZ	REVISED -	
	DRAWN - SJH	REVISED -	
PLOT SCALE = $SCALE$	CHECKED - MTH	REVISED -	
PLOT DATE = 6/4/2026	CHECK DATE - 10/2025	REVISED -	

STATE OF ILLINOIS
DEPARTMENT OF TRANSPORTATION

TOP OF SLAB ELEVATIONS
STRUCTURE NO. 032-0086

SHEET 11 OF 39 SHEETS

F.A.P. RTE.	SECTION	COUNTY	TOTAL SHEETS	SHEET NO.
326	(111HVB1)ES	GRUNDY	137	62
		CONTRACT NO. 66M30		
	ILLINOIS	FED. AID PROJECT		

WEST CURB LINE

Location	Station	Offset	Theoretical Grade Elevations
S. End of S. Approach Slab	31+26.88	-26.00	543.77
A1	31+36.88	-26.00	544.25
A2	31+46.88	-26.00	544.73
N. End of S. Approach Slab	31+56.88	-26.00	545.21

SB PGL

Location	Station	Offset	Theoretical Grade Elevations
S. End of S. Approach Slab	31+40.18	-2.00	544.89
A1	31+50.18	-2.00	545.37
A2	31+60.18	-2.00	545.85
N. End of S. Approach Slab	31+70.18	-2.00	546.34

℄ ROADWAY & CROWN

Location	Station	Offset	Theoretical Grade Elevations
S. End of S. Approach Slab	31+41.29	0.00	544.98
A1	31+51.29	0.00	545.46
A2	31+61.29	0.00	545.95
N. End of S. Approach Slab	31+71.29	0.00	546.43

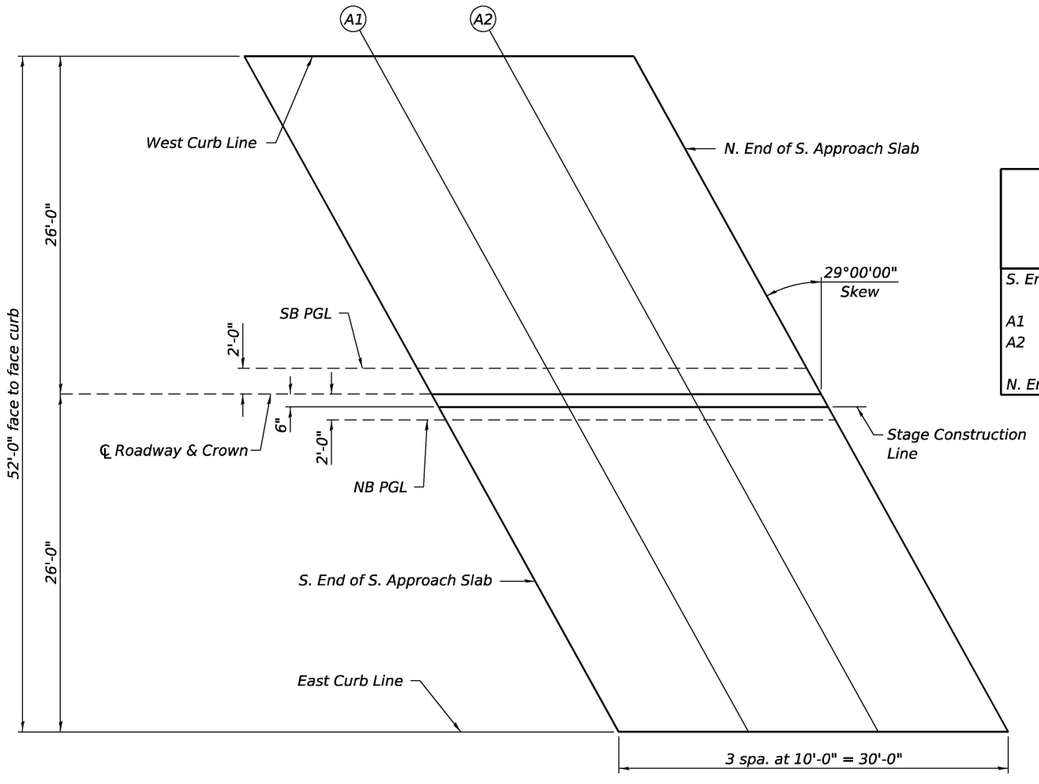

STAGE CONSTRUCTION LINE

Location	Station	Offset	Theoretical Grade Elevations
S. End of S. Approach Slab	31+41.57	0.50	544.97
A1	31+51.57	0.50	545.45
A2	31+61.57	0.50	545.94
N. End of S. Approach Slab	31+71.57	0.50	546.42

NB PGL

Location	Station	Offset	Theoretical Grade Elevations
S. End of S. Approach Slab	31+42.40	2.00	545.00
A1	31+52.40	2.00	545.48
A2	31+62.40	2.00	545.96
N. End of S. Approach Slab	31+72.40	2.00	546.44

EAST CURB LINE

Location	Station	Offset	Theoretical Grade Elevations
S. End of S. Approach Slab	31+55.70	26.00	545.16
A1	31+65.70	26.00	545.64
A2	31+75.70	26.00	546.12
N. End of S. Approach Slab	31+85.70	26.00	546.59

Note:
Offsets are measured from ℄ roadway.

N

SOUTH APPROACH PLAN

(Sheet 1 of 2)

MODEL: Br_Sheet_Consultant
FILE NAME: E:\2410-1\struct\Final Design\CADD (ORD)\CADD_Sheets\0320086-66M30-012-TOASElevs1.dgn

LIN ENGINEERING,LTD.
Consulting Engineers
Springfield, Illinois

USER NAME = Mike Haley	DESIGNED - CZ	REVISED -	
	DRAWN - SJH	REVISED -	
PLOT SCALE = $SCALE$	CHECKED - MTH	REVISED -	
PLOT DATE = 5/19/2026	CHECK DATE - 10/2025	REVISED -	

STATE OF ILLINOIS
DEPARTMENT OF TRANSPORTATION

TOP OF APPROACH SLAB ELEVATIONS
STRUCTURE NO. 032-0086
SHEET 12 OF 39 SHEETS

F.A.P. RTE.	SECTION	COUNTY	TOTAL SHEETS	SHEET NO.
326	(111HVB1)ES	GRUNDY	137	63
		CONTRACT NO. 66M30		
	ILLINOIS	FED. AID PROJECT		

WEST CURB LINE

Location	Station	Offset	Theoretical Grade Elevations
S. End of N. Approach Slab	35+60.47	-26.00	548.57
A3	35+70.47	-26.00	548.21
A4	35+80.47	-26.00	547.84
N. End of N. Approach Slab	35+90.47	-26.00	547.48

SB PGL

Location	Station	Offset	Theoretical Grade Elevations
S. End of N. Approach Slab	35+65.13	-2.00	548.88
A3	35+75.13	-2.00	548.52
A4	35+85.13	-2.00	548.15
N. End of N. Approach Slab	35+95.13	-2.00	547.79

℄ ROADWAY & CROWN

Location	Station	Offset	Theoretical Grade Elevations
S. End of N. Approach Slab	35+65.52	0.00	548.91
A3	35+75.52	0.00	548.54
A4	35+85.52	0.00	548.18
N. End of N. Approach Slab	35+95.52	0.00	547.81

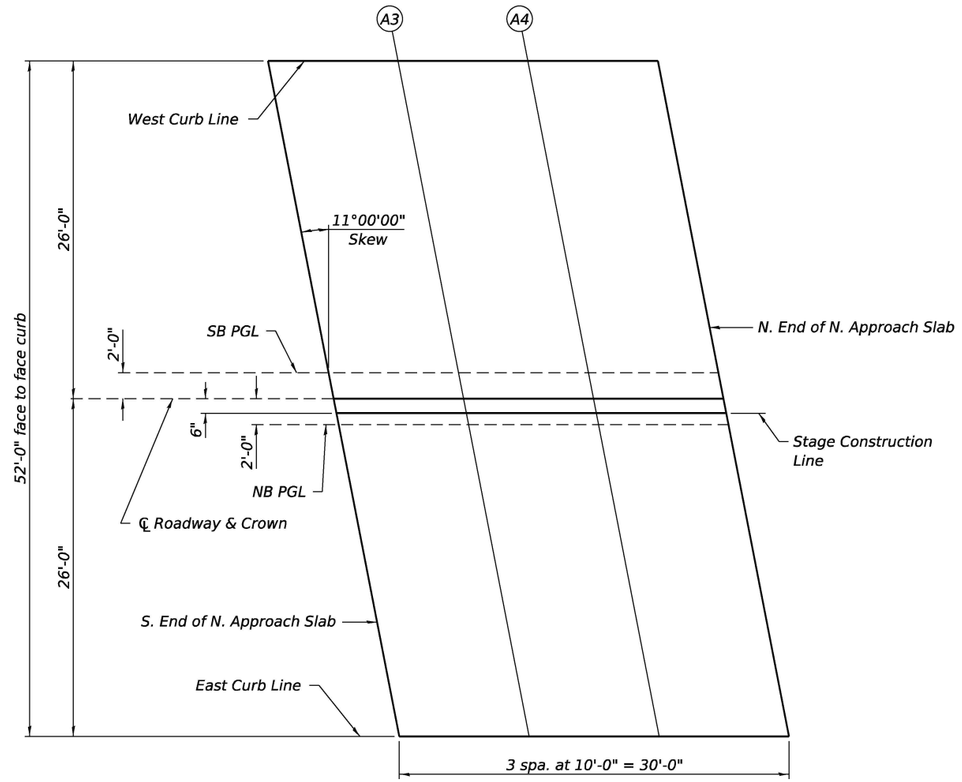

NORTH APPROACH PLAN

STAGE CONSTRUCTION LINE

Location	Station	Offset	Theoretical Grade Elevations
S. End of N. Approach Slab	35+65.62	0.50	548.90
A3	35+75.62	0.50	548.53
A4	35+85.62	0.50	548.17
N. End of N. Approach Slab	35+95.62	0.50	547.80

NB PGL

Location	Station	Offset	Theoretical Grade Elevations
S. End of N. Approach Slab	35+65.91	2.00	548.85
A3	35+75.91	2.00	548.49
A4	35+85.91	2.00	548.12
N. End of N. Approach Slab	35+95.91	2.00	547.76

EAST CURB LINE

Location	Station	Offset	Theoretical Grade Elevations
S. End of N. Approach Slab	35+70.58	26.00	548.20
A3	35+80.58	26.00	547.84
A4	35+90.58	26.00	547.47
N. End of N. Approach Slab	36+00.58	26.00	547.11

Note:
Offsets are measured from ℄ roadway.

MODEL: Br_Sheet_Consultant
FILE NAME: E:\2410-1\struct\Final Design\CADD (ORD)\CADD_Sheets\0320086-66M30-013-TOASElevs2.dgn

LIN ENGINEERING,LTD.
Consulting Engineers
Springfield, Illinois

USER NAME = Mike Haley | DESIGNED - CZ | REVISED -
DRAWN - SJH | REVISED -
PLOT SCALE = $SCALE$ | CHECKED - MTH | REVISED -
PLOT DATE = 5/19/2026 | CHECK DATE - 10/2025 | REVISED -

STATE OF ILLINOIS
DEPARTMENT OF TRANSPORTATION

TOP OF APPROACH SLAB ELEVATIONS
STRUCTURE NO. 032-0086
SHEET 13 OF 39 SHEETS

F.A.P. RTE.	SECTION	COUNTY	TOTAL SHEETS	SHEET NO.
326	(111HVB1)ES	GRUNDY	137	64
		CONTRACT NO. 66M30		
	ILLINOIS FED. AID PROJECT			

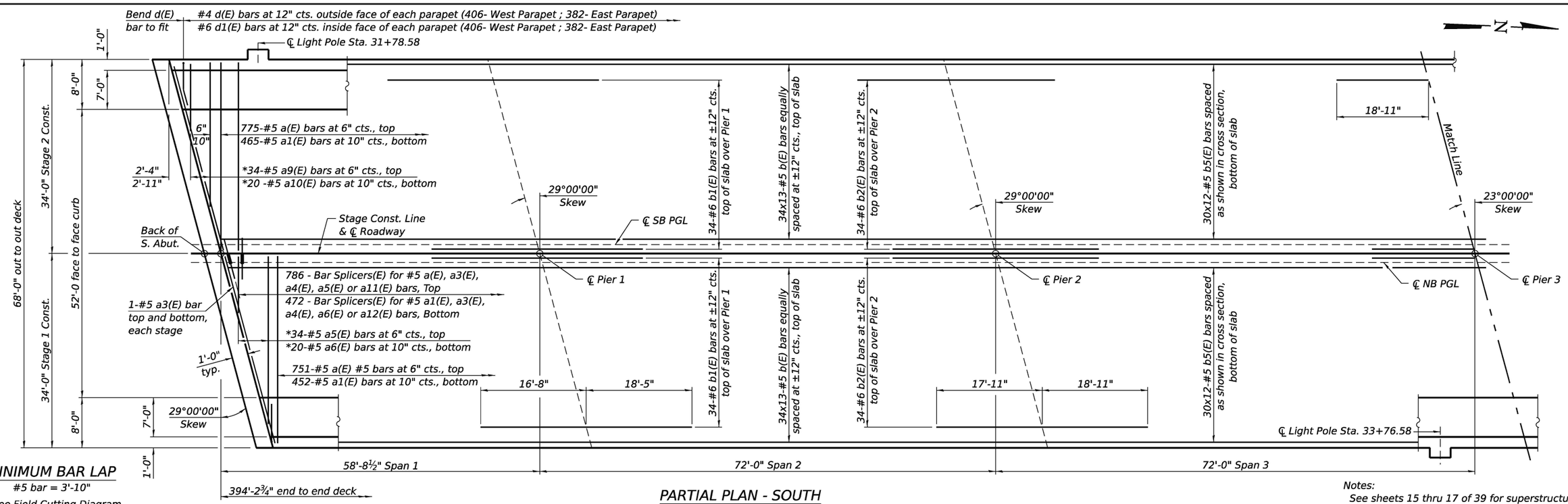

MINIMUM BAR LAP

#5 bar = 3'-10"

* See Field Cutting Diagram on sheet 17 of 39.

PARTIAL PLAN - SOUTH

Notes:
See sheets 15 thru 17 of 39 for superstructure details and Bill of Material.
Bars indicated thus 20 x 3-#5 etc. indicates 20 lines of bars with 3 lengths per line.

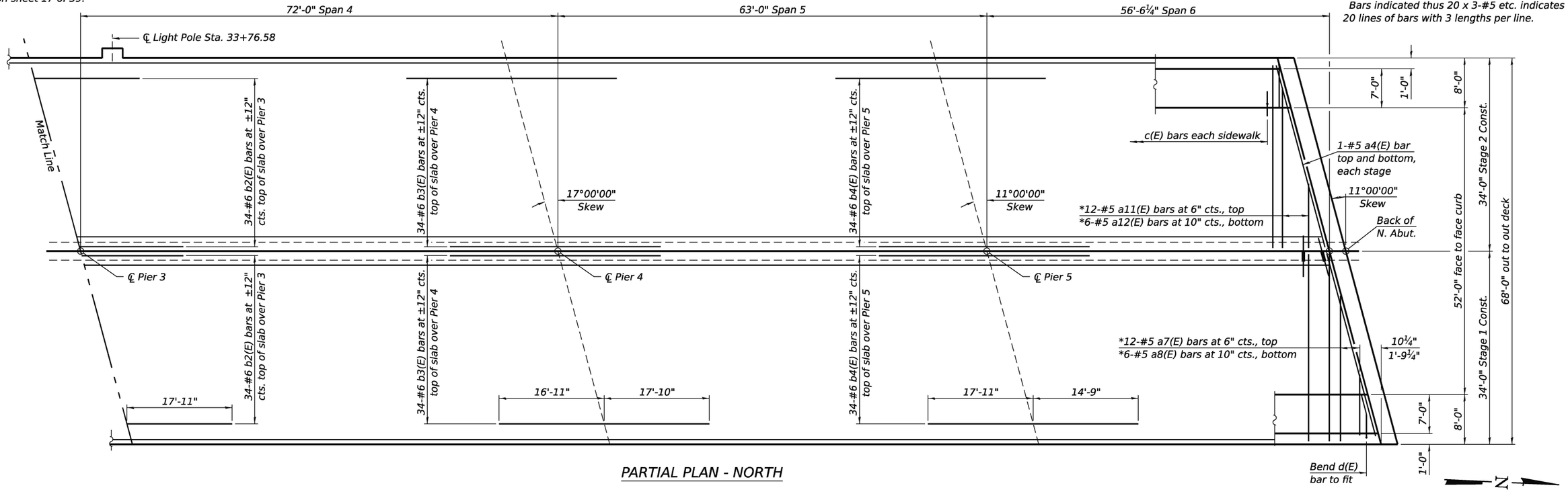

PARTIAL PLAN - NORTH

MODEL: Br_Sheet_Consultant
FILE NAME: E:\2410-1\struct\Final Design\CADD (ORD)\CADD_Sheets\0320086-66M30-014-Super.dgn

LIN ENGINEERING, LTD. Consulting Engineers Springfield, Illinois	USER NAME = Lin10-PC	DESIGNED - CZ	REVISED -	STATE OF ILLINOIS DEPARTMENT OF TRANSPORTATION
		DRAWN - SJH	REVISED -	
	PLOT SCALE = $SCALE$	CHECKED - MTH	REVISED -	
	PLOT DATE = 6/9/2026	CHECK DATE - 10/2025	REVISED -	

SUPERSTRUCTURE
STRUCTURE NO. 032-0086
SHEET 14 OF 39 SHEETS

F.A.P. RTE.	SECTION	COUNTY	TOTAL SHEETS	SHEET NO.
326	(111HVB1)ES	GRUNDY	137	65
		CONTRACT NO. 66M30		
		ILLINOIS	FED. AID PROJECT	

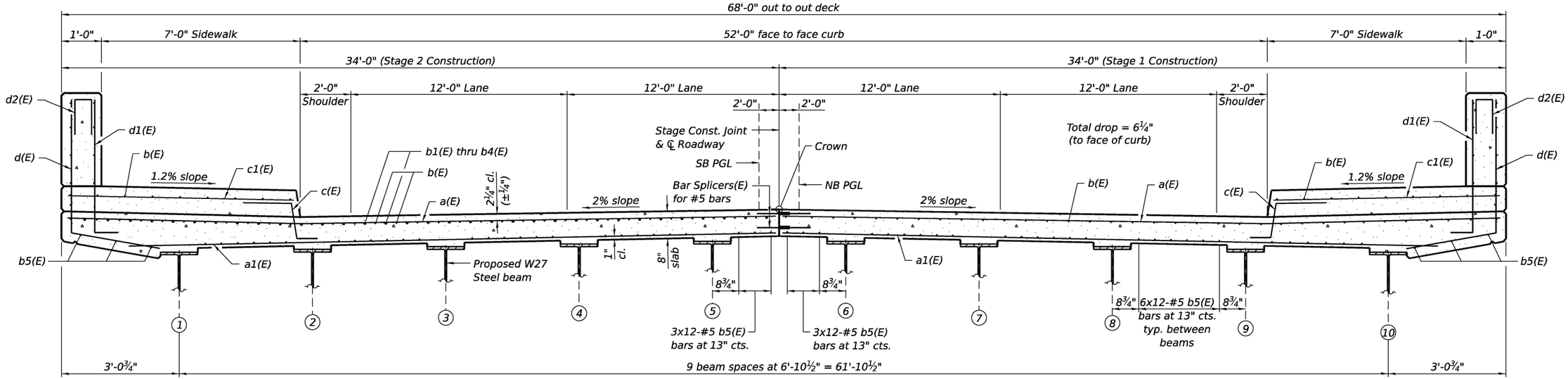

CROSS SECTION

(Looking North)
(Scuppers and shear studs not shown for clarity)

NEAR PIER

NEAR MIDSPAN

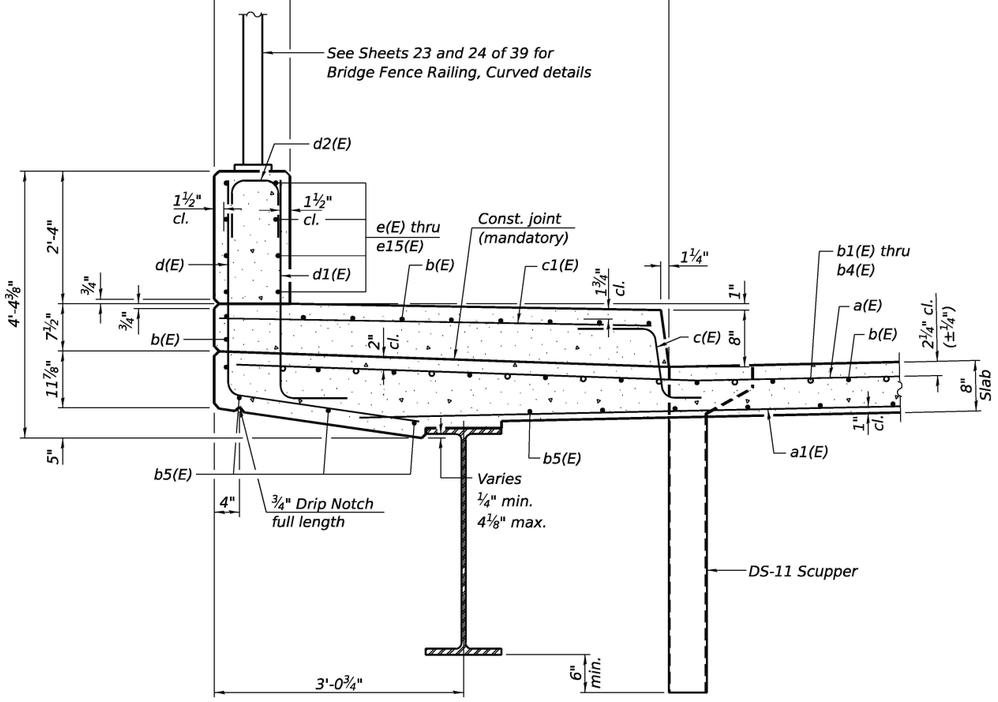

SECTION THRU SIDEWALK

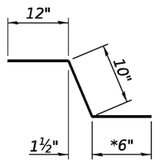

BAR c(E)

* *In lieu of bottom leg, c(E) bars may be drilled and set according to Article 509.06 of the Standard Specifications. Drilled holes shall be roughened or scored per manufacturer's recommendations. Maximum depth of drilled hole shall not exceed 6". Contractor shall take all necessary precautions to prevent drilled hole interference with deck reinforcement bars. Locate longitudinal bars to miss drilled locations. Locate drilled holes to miss transverse bars in deck.*

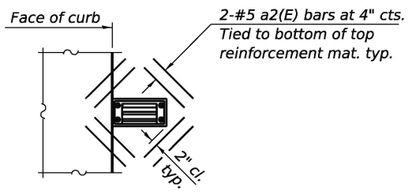

PLAN AT SCUPPER

(6 locations)

Note:
Cut longitudinal reinforcement to clear drainage scuppers.

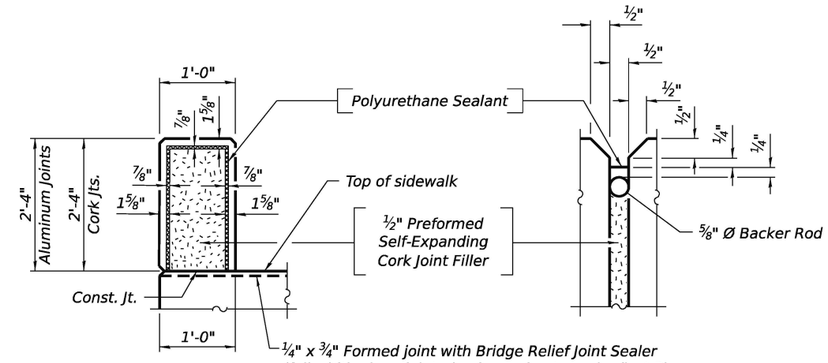

¼" x ¾" Formed joint with Bridge Relief Joint Sealer (full width along joint - backer rod not required) at Piers and the adjacent parapet joint upstation and downstation.

PARAPET JOINT DETAILS

Notes:
The Polyurethane Sealant shall be according to Article 1050.04 of the Std. Spec. and the color shall be gray.
See Sheet 1 of 39 for Drainage Scupper locations.

MODEL: Br_Sheet_Consultant
FILE NAME: E:\2410-1\struct\Final Design\CADD (ORD)\CADD_Sheets\0320086-66M30-015-SuperDtls1.dgn

LIN ENGINEERING,LTD.
Consulting Engineers
Springfield, Illinois

USER NAME = LIN03-PC	DESIGNED - CZ	REVISED -	
	DRAWN - SJH	REVISED -	
PLOT SCALE = $SCALE$	CHECKED - MTH	REVISED -	
PLOT DATE = 6/8/2026	CHECK DATE - 10/2025	REVISED -	

STATE OF ILLINOIS
DEPARTMENT OF TRANSPORTATION

SUPERSTRUCTURE DETAILS
STRUCTURE NO. 032-0086
SHEET 15 OF 39 SHEETS

F.A.P. RTE.	SECTION	COUNTY	TOTAL SHEETS	SHEET NO.
326	(111HVB1)ES	GRUNDY	137	66
		CONTRACT NO. 66M30		
	ILLINOIS FED. AID PROJECT			

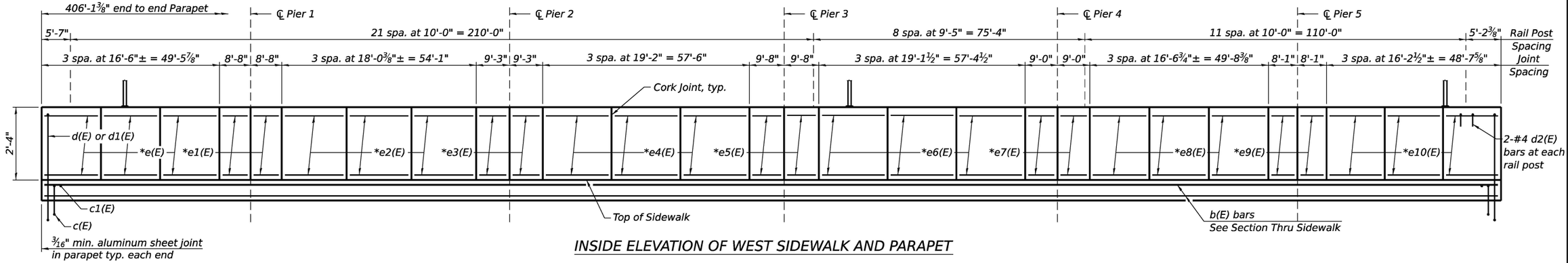

INSIDE ELEVATION OF WEST SIDEWALK AND PARAPET

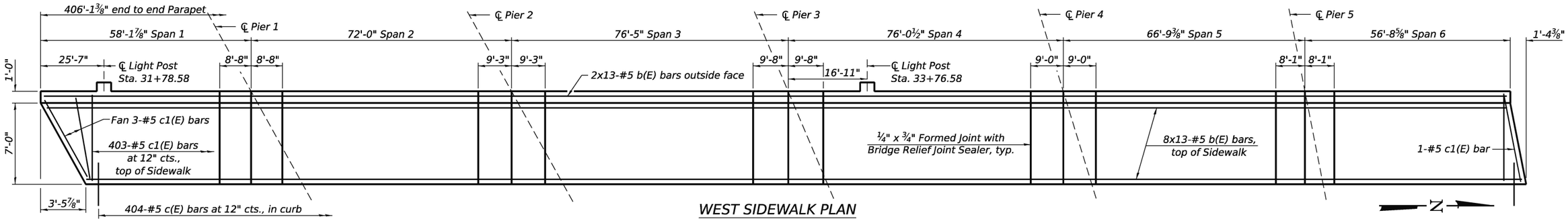

WEST SIDEWALK PLAN

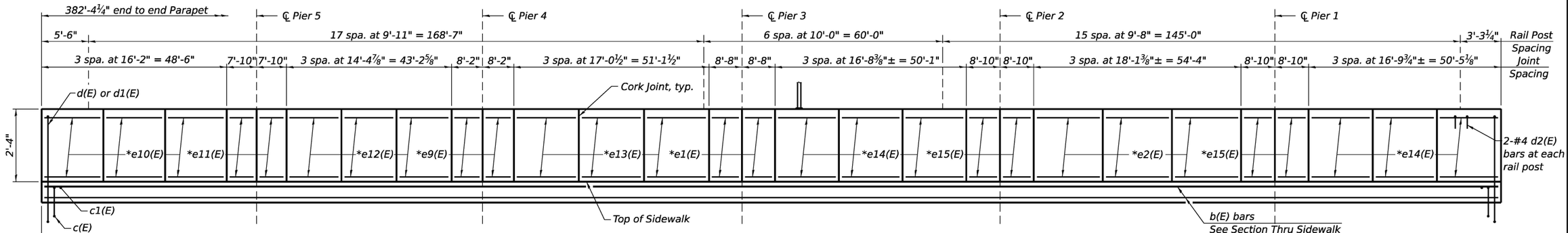

INSIDE ELEVATION OF EAST SIDEWALK AND PARAPET

* 8-#4 bars, See Section Thru Sidewalk

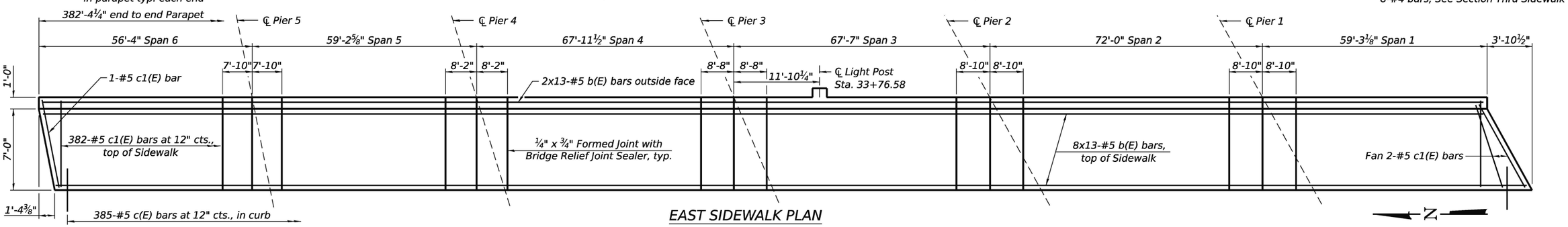

EAST SIDEWALK PLAN

MODEL: Br_Sheet_Consultant
FILE NAME: E:\2410-1\struct\Final Design\CADD (ORD)\CADD_Sheets\0320086-66M30-016-SuperDtls2.dgn

LIN ENGINEERING,LTD.
Consulting Engineers
Springfield, Illinois

USER NAME = LIN03-PC	DESIGNED - CZ	REVISED -	
	DRAWN - SJH	REVISED -	
PLOT SCALE = $SCALE$	CHECKED - MTH	REVISED -	
PLOT DATE = 6/4/2026	CHECK DATE - 10/2025	REVISED -	

STATE OF ILLINOIS
DEPARTMENT OF TRANSPORTATION

SUPERSTRUCTURE DETAILS
STRUCTURE NO. 032-0086

SHEET 16 OF 39 SHEETS

F.A.P. RTE.	SECTION	COUNTY	TOTAL SHEETS	SHEET NO.
326	(111HVB1)ES	GRUNDY	137	67
		CONTRACT NO. 66M30		
	ILLINOIS FED. AID PROJECT			

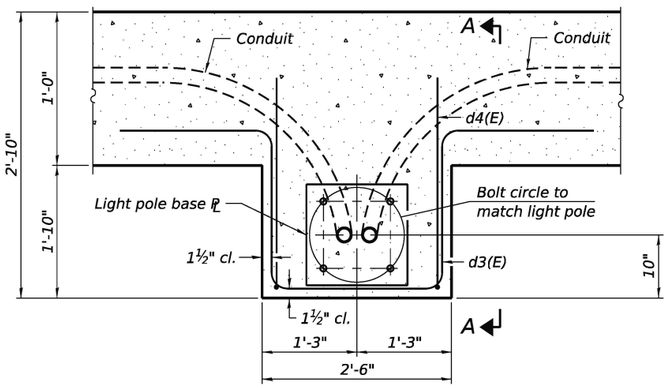

PLAN AT LIGHT POST

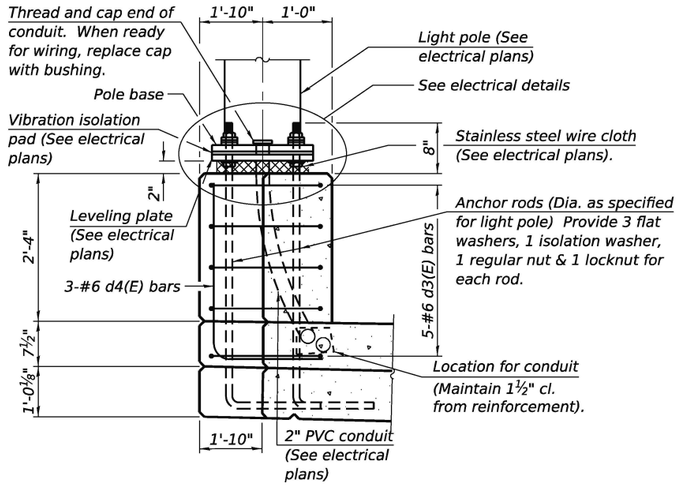

SECTION A-A

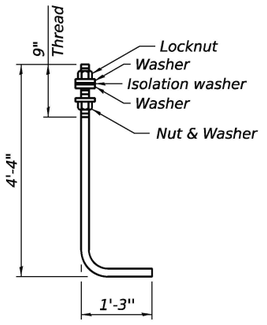

ANCHOR ROD

Diameter as specified for light poles. (ASTM F 1554 Grade 105) Full length hot dipped galvanized.

Note:
Cost of anchor rods is included with Concrete Superstructure.

SUPERSTRUCTURE BILL OF MATERIAL

Bar	No.	Size	Length	Shape
a(E)	1526	#5	33'-8"	
a1(E)	917	#5	32'-5"	
a2(E)	48	#5	1'-6"	
a3(E)	4	#5	38'-6"	
a4(E)	4	#5	34'-3"	
a5(E)	17	#5	36'-0"	
a6(E)	10	#5	33'-4"	
a7(E)	6	#5	34'-11"	
a8(E)	3	#5	35'-0"	
a9(E)	17	#5	37'-1"	
a10(E)	10	#5	35'-6"	
a11(E)	6	#5	34'-0"	
a12(E)	3	#5	38'-3"	
b(E)	1144	#5	34'-10"	
b1(E)	68	#6	35'-1"	
b2(E)	136	#6	36'-10"	
b3(E)	68	#6	34'-9"	
b4(E)	68	#6	32'-8"	
b5(E)	720	#5	37'-4"	
c(E)	789	#5	2'-4"	
c1(E)	792	#5	7'-7"	
d(E)	788	#4	5'-11"	
d1(E)	788	#6	4'-4"	
d2(E)	160	#4	2'-2"	
d3(E)	15	#6	10'-5"	
d4(E)	9	#6	5'-5"	
e(E)	24	#4	16'-2"	
e1(E)	32	#4	8'-4"	
e2(E)	48	#4	17'-9"	
e3(E)	16	#4	8'-11"	
e4(E)	24	#4	18'-10"	
e5(E)	16	#4	9'-4"	
e6(E)	24	#4	18'-9"	
e7(E)	16	#4	8'-8"	
e8(E)	24	#4	16'-3"	
e9(E)	32	#4	7'-10"	
e10(E)	48	#4	15'-10"	
e11(E)	16	#4	7'-6"	
e12(E)	24	#4	14'-1"	
e13(E)	24	#4	16'-9"	
e14(E)	48	#4	16'-5"	
e15(E)	32	#4	8'-6"	
m10(E)	8	#6	37'-2"	
m11(E)	24	#6	7'-6"	
m12(E)	6	#6	1'-10"	
m13(E)	6	#6	3'-7"	
m14E)	4	#4	37'-2"	
m15E)	8	#6	33'-1"	
m16E)	24	#6	6'-8"	
m17E)	6	#6	1'-5"	
m18E)	6	#6	3'-2"	
m19E)	4	#4	33'-1"	
s10(E)	134	#5	6'-8"	
s11(E)	134	#5	8'-2"	
u10(E)	134	#5	3'-10"	
Reinforcement Bars, Epoxy Coated		Lbs.	200,560	
Concrete Superstructure		Cu. Yds.	1,008.8	

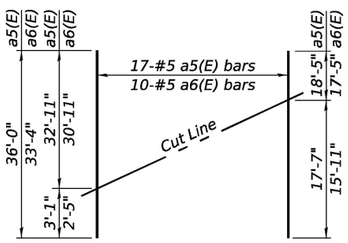

FIELD CUTTING DIAGRAM

Order a5(E) and a6(E) bars full length. Cut as shown and use remainder of bars in opposite half of section.

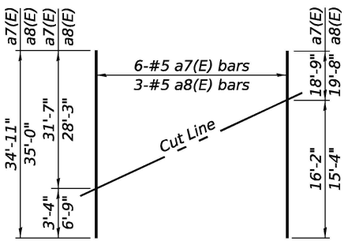

FIELD CUTTING DIAGRAM

Order a7(E) and a8(E) bars full length. Cut as shown and use remainder of bars in opposite half of section.

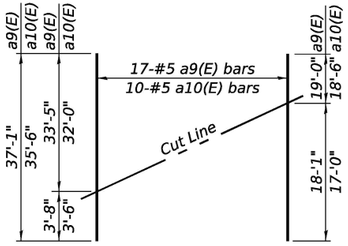

FIELD CUTTING DIAGRAM

Order a9(E) and a10(E) bars full length. Cut as shown and use remainder of bars in opposite half of section.

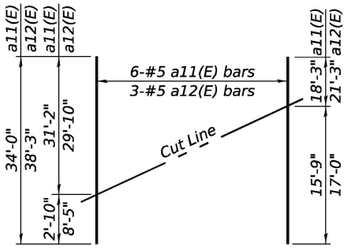

FIELD CUTTING DIAGRAM

Order a11(E) and a12(E) bars full length. Cut as shown and use remainder of bars in opposite half of section.

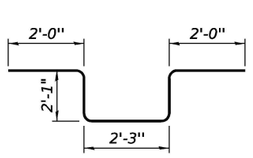

BAR d3(E)

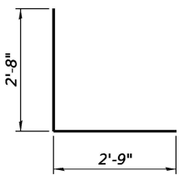

BAR d4(E)

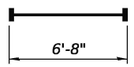

BAR m16(E)
(Headed. 48-#6 Bar terminators)

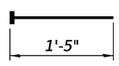

BAR m17(E)
(Headed. 6-#6 Bar terminators)

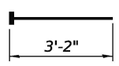

BAR m18(E)
(Headed. 6-#6 Bar terminators)

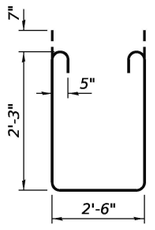

BAR s11(E)

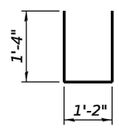

BAR u10(E)

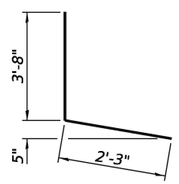

BAR d(E)

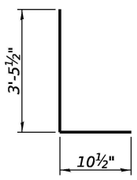

BAR d1(E)

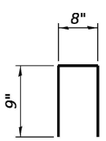

BAR d2(E)

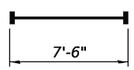

BAR m11(E)
(Headed. 48-#6 Bar terminators)

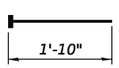

BAR m12(E)
(Headed. 6-#6 Bar terminators)

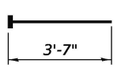

BAR m13(E)
(Headed. 6-#6 Bar terminators)

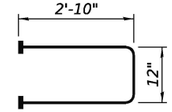

BAR s10(E)
(Headed. 268-#5 Bar terminators)

MODEL: Br_Sheet_Consultant
FILE NAME: E:\2410-1\struct\Final Design\CADD (ORD)\CADD_Sheets\0320086-66M30-017-SuperDtls3.dgn

LIN ENGINEERING,LTD.
Consulting Engineers
Springfield, Illinois

USER NAME = LIN03-PC	DESIGNED - CZ	REVISED -	STATE OF ILLINOIS DEPARTMENT OF TRANSPORTATION	SUPERSTRUCTURE DETAILS STRUCTURE NO. 032-0086
	DRAWN - SJH	REVISED -		
PLOT SCALE = $SCALE$	CHECKED - MTH	REVISED -		SHEET 17 OF 39 SHEETS
PLOT DATE = 6/19/2026	CHECK DATE - 10/2025	REVISED -		

F.A.P. RTE.	SECTION	COUNTY	TOTAL SHEETS	SHEET NO.
326	(111HVB1)ES	GRUNDY	137	68
		CONTRACT NO. 66M30		
	ILLINOIS	FED. AID PROJECT		

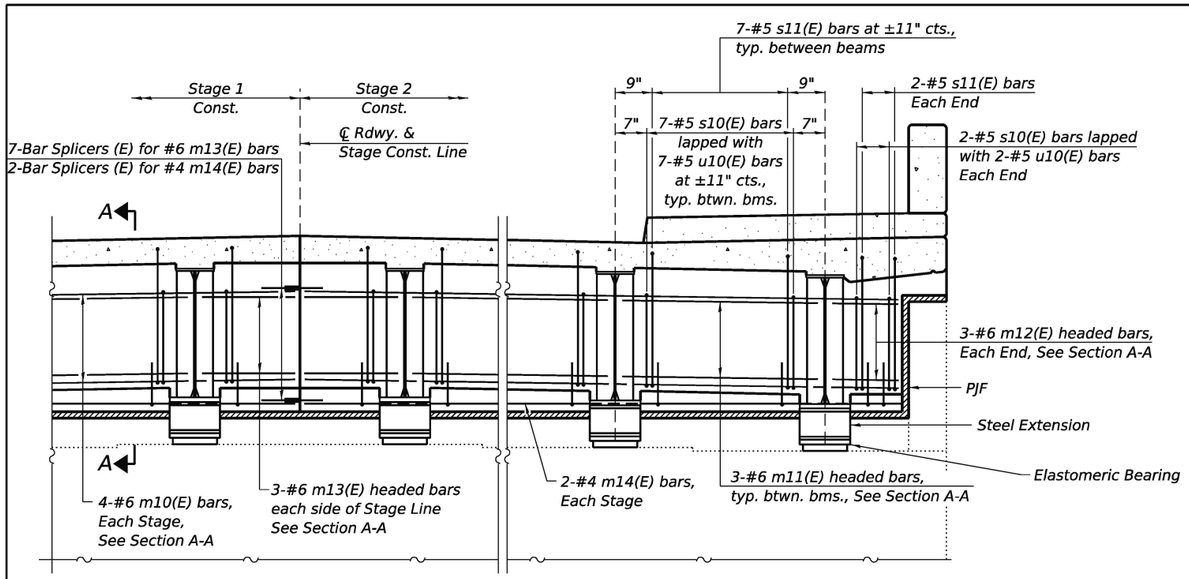

DIAPHRAGM AT SOUTH ABUTMENT

(Looking South)

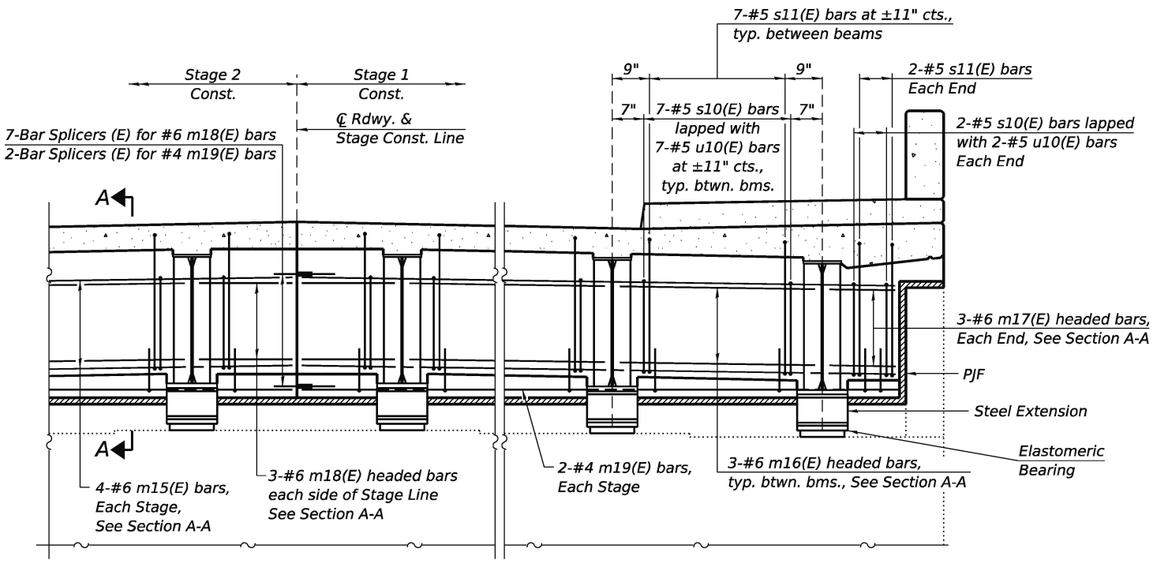

DIAPHRAGM AT NORTH ABUTMENT

(Looking North)

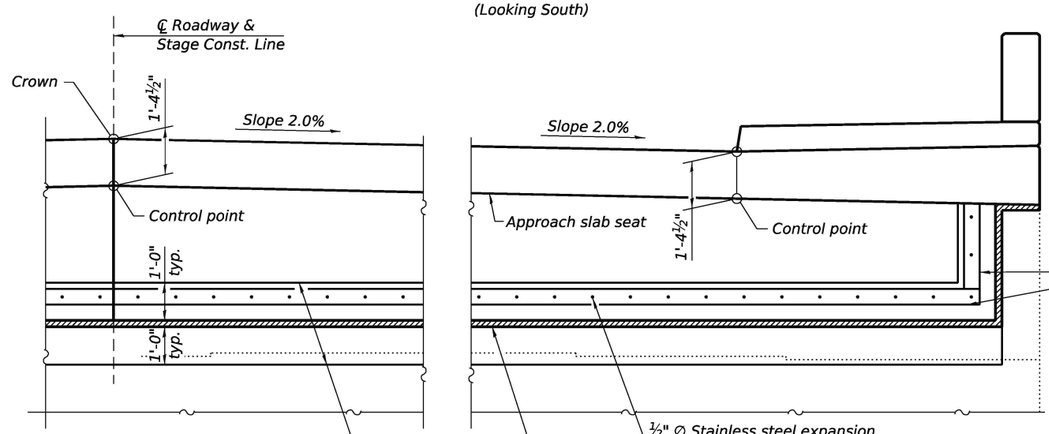

VIEW B-B

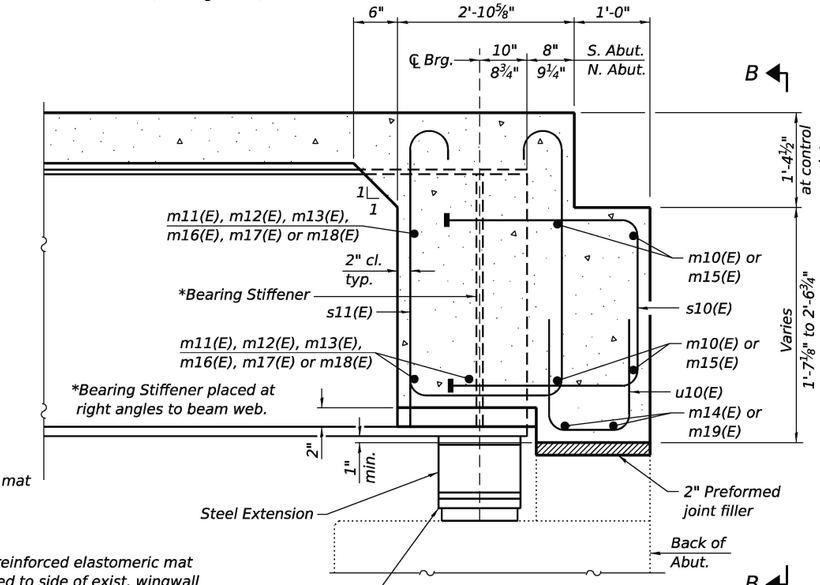

SECTION A-A

(at right angles)

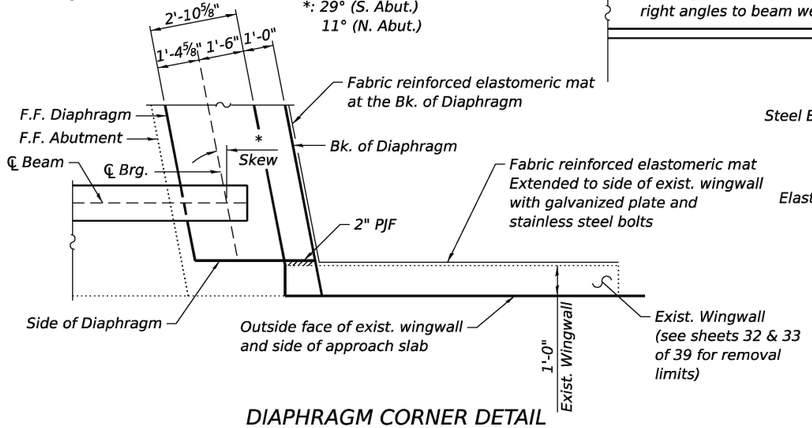

DIAPHRAGM CORNER DETAIL

(Typical each end both sides; NE corner shown, other corners similar)
(Galvanized plate not shown for clarity)

Notes:

See sheet 17 of 39 for superstructure details and Bill of Material.

See sheet 2 of 39 for drainage details.

The approach slab seat shall have a constant slope determined from the control points shown.

The s10(E) and s11(E) bars shall be placed parallel to the beams. Spacing for these bars shall be at right angles to the beams.

Headed bars shall conform to ASTM A970 with threaded attachment; class HA; and reinforcement bars conforming to ASTM A706. Bar terminators paid for separately.

Cost of facric reinforced elastomeric mat, galvanized plate, stainless steel expansion bolts with nuts and washers and installation are included in the cost of Concrete Superstructure.

MODEL: Br_Sheet_Consultant
FILE NAME: E:\2410-1\struct\Final Design\CADD (ORD)\CADD_Sheets\0320086-66M30-018-DiaphragmDtls.dgn

LIN ENGINEERING, LTD.
Consulting Engineers
Springfield, Illinois

USER NAME = LIN03-PC	DESIGNED - CZ	REVISED -	
	DRAWN - SJH	REVISED -	
PLOT SCALE = $SCALE$	CHECKED - MTH	REVISED -	
PLOT DATE = 6/4/2026	CHECK DATE - 10/2025	REVISED -	

STATE OF ILLINOIS
DEPARTMENT OF TRANSPORTATION

DIAPHRAGM DETAILS
STRUCTURE NO. 032-0086
SHEET 18 OF 39 SHEETS

F.A.P. RTE.	SECTION	COUNTY	TOTAL SHEETS	SHEET NO.
326	(111HVB1)ES	GRUNDY	137	69
		CONTRACT NO. 66M30		
	ILLINOIS	FED. AID PROJECT		

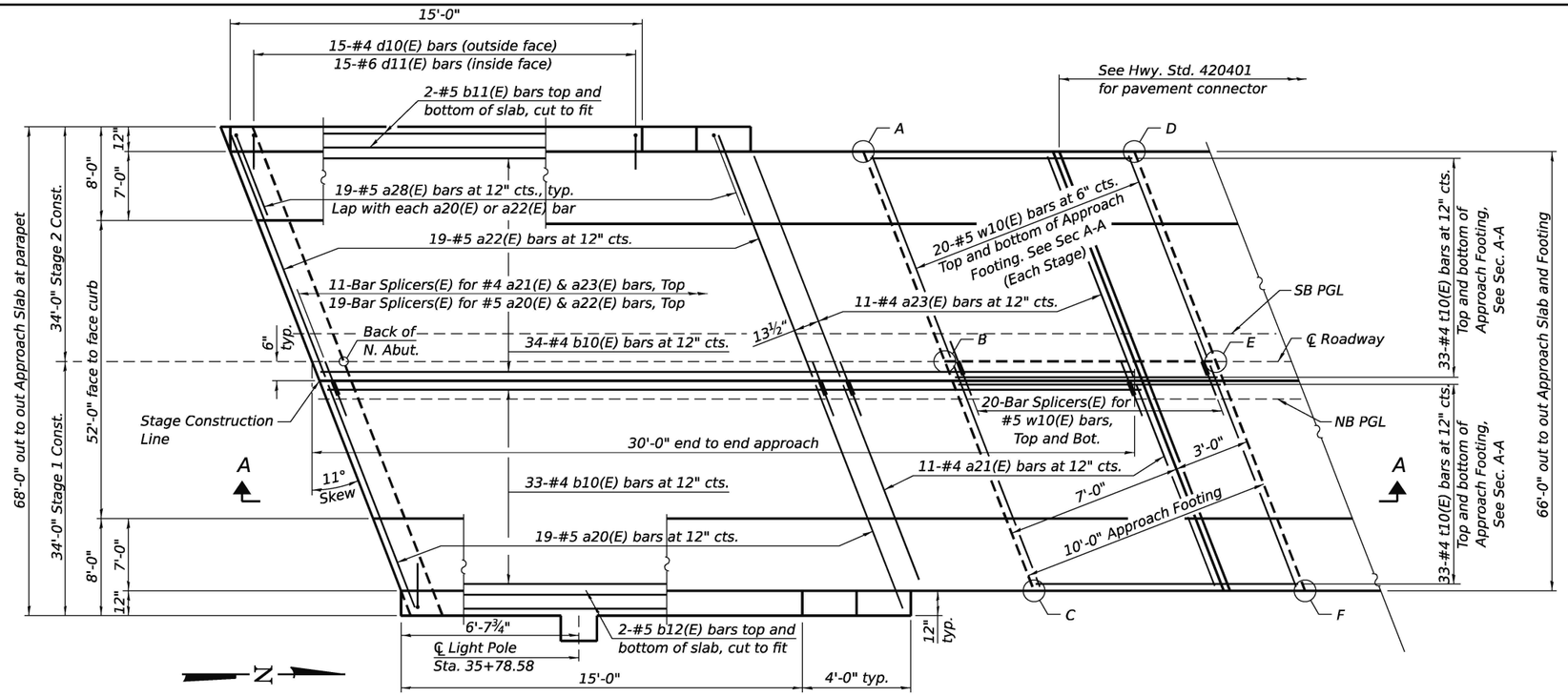

PLAN - NORTH APPROACH

Note:
See Sheet 22 of 39 for Section A-A

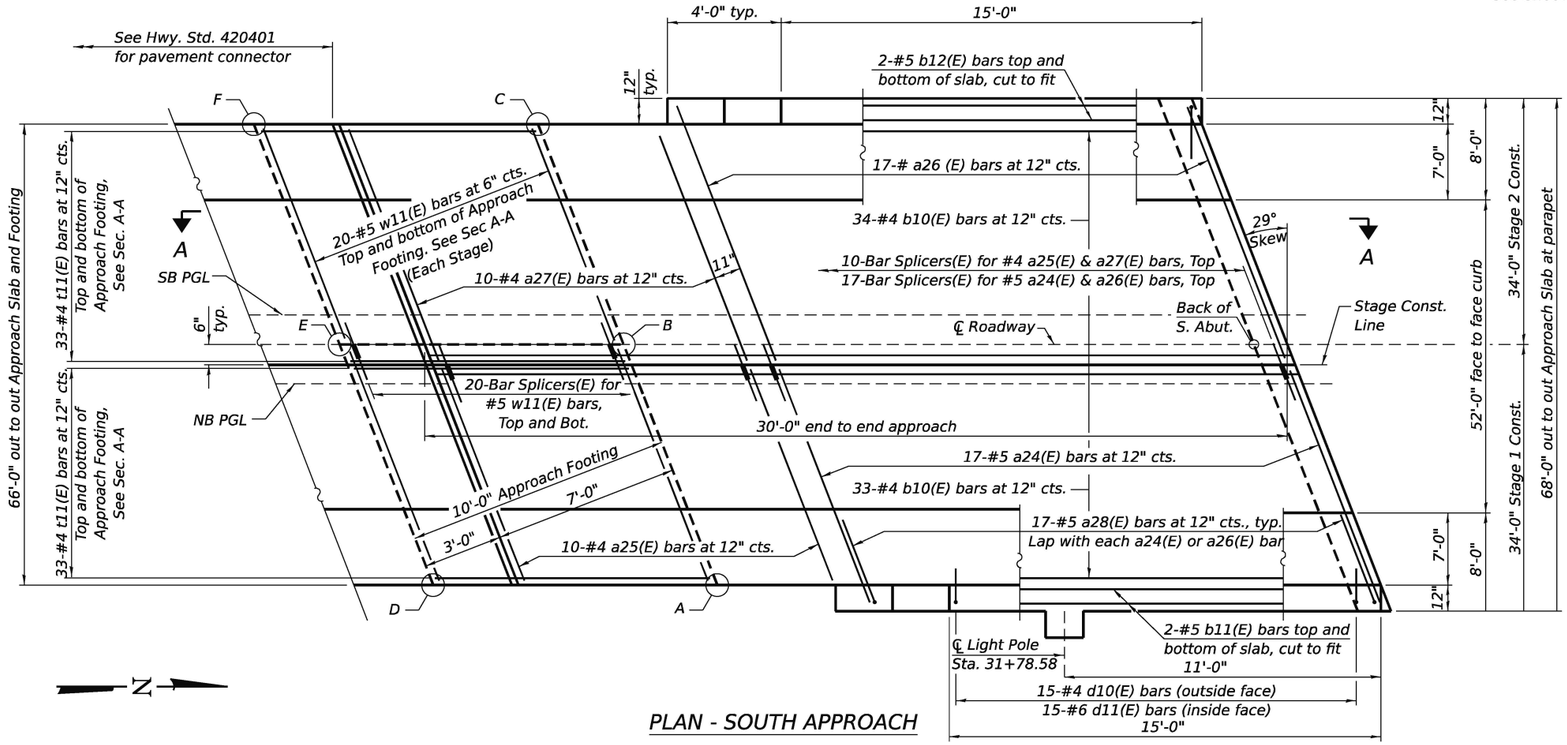

PLAN - SOUTH APPROACH

TOP AND BOTTOM ELEVATIONS FOR APPROACH FOOTING

South Approach		
Point/Location	Top	Bottom
A - Sta. 31+67.58; 33.00' Rt.	544.22	543.38
B - Sta. 31+49.29; 0.00' Lt.	543.99	543.16
C - Sta. 31+31.00; 33.00' Lt.	542.45	541.62
D - Sta. 31+56.15; 33.00' Rt.	543.66	542.83
E - Sta. 31+37.86; 0.00' Lt.	543.44	542.61
F - Sta. 31+19.57; 33.00' Lt.	541.90	541.07

North Approach		
Point/Location	Top	Bottom
A - Sta. 35+81.98; 33.00' Lt.	546.27	545.44
B - Sta. 35+88.39; 0.00' Lt.	546.70	545.87
C - Sta. 35+94.81; 33.00' Rt.	545.80	544.97
D - Sta. 35+92.16; 33.00' Lt.	545.90	545.07
E - Sta. 35+98.58; 0.00' Lt.	546.33	545.49
F - Sta. 36+04.99; 33.00' Rt.	545.43	544.60

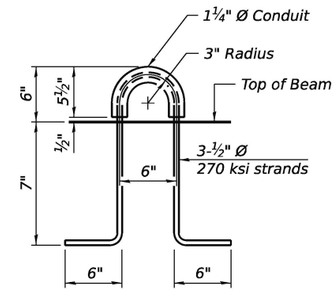

LIFTING LOOP DETAIL

(An alternate lifting loop with a Safe Working Load of 6,250 lbs. (25,000 lbs. Proof Load / Factor of Safety of 4) and utilized according to the manufacturer's recommendations may be used.)

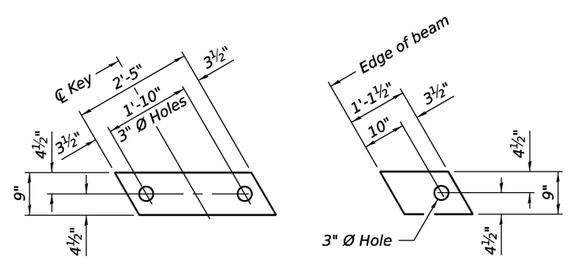

INTERIOR EXTERIOR

FABRIC BEARING PAD

Notes:
Bearing pads at fixed end shall be ½" thick and bearing pads at expansion end shall be ¾" thick.
Omit holes for fabric bearing pads at approach slab footing end of beams.

(Sheet 1 of 4)

MODEL: Br_Sheet_Consultant
FILE NAME: E:\2410-1\struct\Final Design\CADD (ORD)\CADD_Sheets\0320086-66M30-019-AppSlabDtls1.dgn

LIN ENGINEERING,LTD.
Consulting Engineers
Springfield, Illinois

USER NAME = LIN03-PC		DESIGNED - CZ		REVISED -
		DRAWN - SJH		REVISED -
PLOT SCALE = $SCALE$		CHECKED - MTH		REVISED -
PLOT DATE = 6/19/2026		CHECK DATE - 10/2025		REVISED -

STATE OF ILLINOIS
DEPARTMENT OF TRANSPORTATION

BRIDGE APPROACH SLAB DETAILS
STRUCTURE NO. 032-0086
SHEET 19 OF 39 SHEETS

F.A.P. RTE.	SECTION	COUNTY	TOTAL SHEETS	SHEET NO.
326	(111HVB1)ES	GRUNDY	137	70
		CONTRACT NO. 66M30		
	ILLINOIS	FED. AID PROJECT		

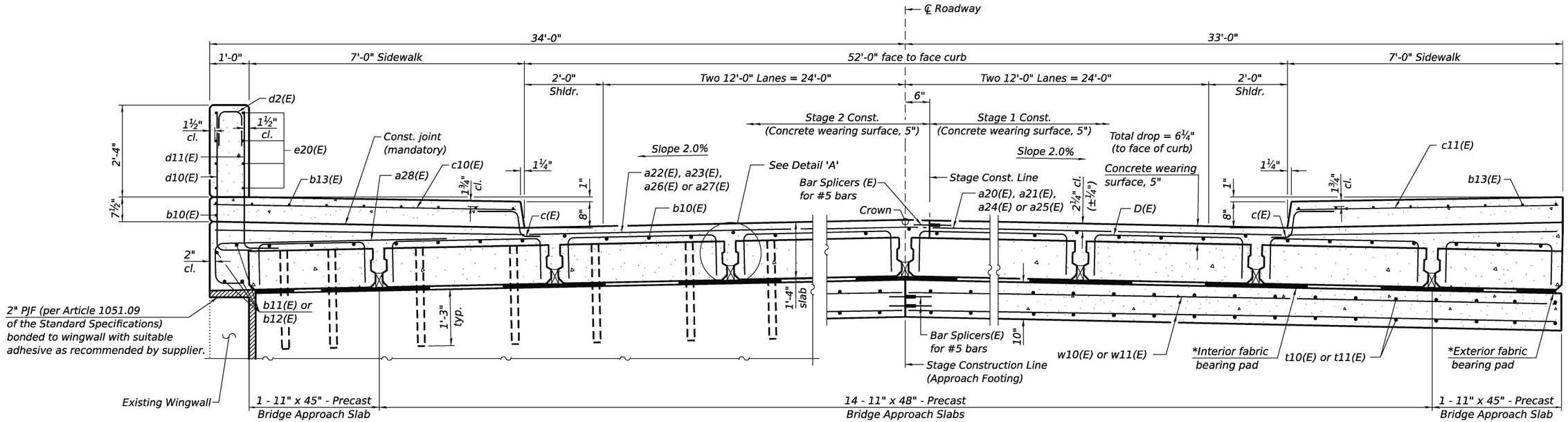

NEAR ABUTMENT — AT APPROACH FOOTING

CROSS SECTION

(Looking North)

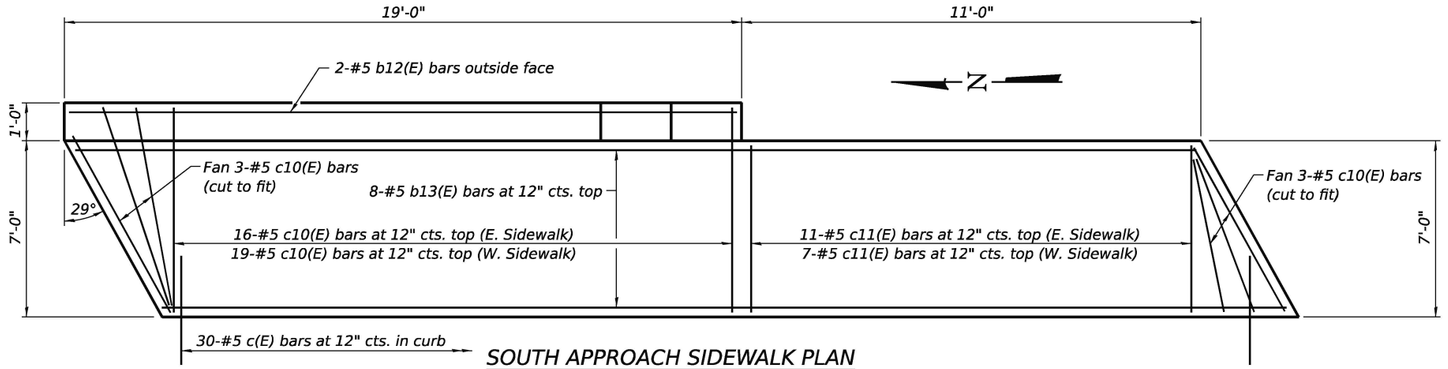

SOUTH APPROACH SIDEWALK PLAN

(Showing Sidewalk Reinforcement) (E. Sidewalk shown; W. Sidewalk similar)

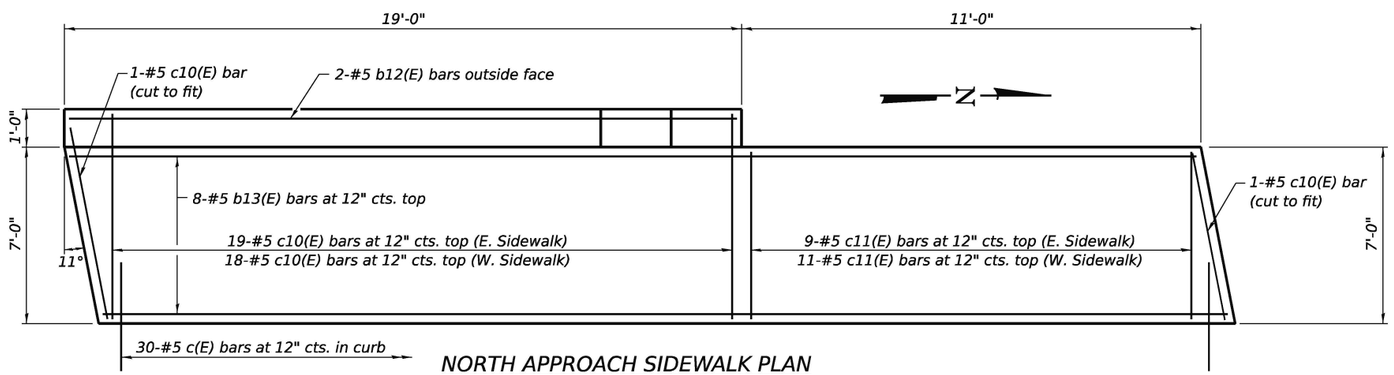

NORTH APPROACH SIDEWALK PLAN

(Showing Sidewalk Reinforcement) (W. Sidewalk shown; E. Sidewalk similar)

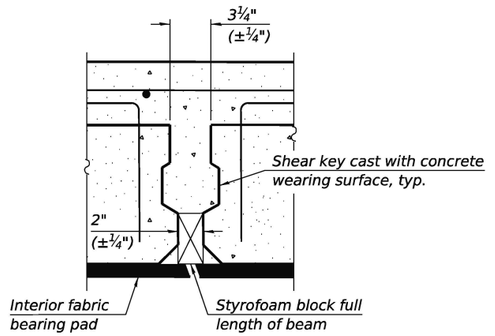

DETAIL 'A'

* Fabric bearing pads at the expansion end shall be recessed ¼" into the approach footing and bonded. Adjusting shims, when required, shall be bonded to the top of the fabric bearing pads.

(Sheet 2 of 4)

MODEL: Br_Sheet_Consultant
FILE NAME: E:\2410-1\struct\Final Design\CADD (ORD)\CADD_Sheets\032008S-66M30-020-AppSlabDtls2.dgn

LIN ENGINEERING,LTD. Consulting Engineers Springfield, Illinois	USER NAME = Mike Haley	DESIGNED - CZ	REVISED -	STATE OF ILLINOIS DEPARTMENT OF TRANSPORTATION	BRIDGE APPROACH SLAB DETAILS STRUCTURE NO. 032-0086
		DRAWN - SJH	REVISED -		
	PLOT SCALE = $SCALE$	CHECKED - MTH	REVISED -		SHEET 20 OF 39 SHEETS
	PLOT DATE = 5/19/2026	CHECK DATE - 10/2025	REVISED -		

F.A.P. RTE.	SECTION	COUNTY	TOTAL SHEETS	SHEET NO.
326	(111HVB1)ES	GRUNDY	137	71
		CONTRACT NO. 66M30		
		ILLINOIS	FED. AID PROJECT	

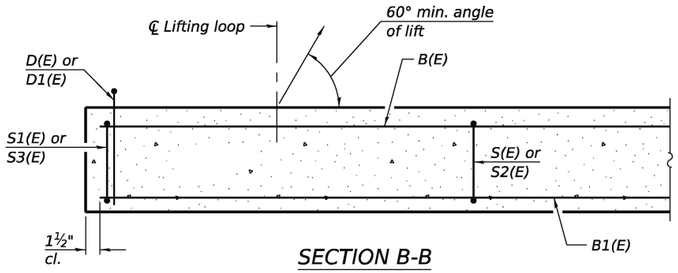

SECTION B-B

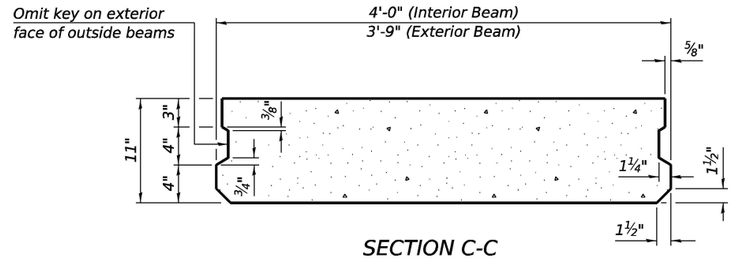

SECTION C-C
(Showing dimensions)

Notes:

The precast bridge approach slab shall be according to Section 504 of the Standard Specifications and shall be paid for at the contract unit price per square foot for Precast Bridge Approach Slab.

Cast-in-place substitution of Precast Bridge Approach Slab is not allowed.

The top surface of precast bridge approach slabs shall be finished similar to precast prestressed deck beams with concrete wearing surface as specified in the IDOT "Manual for Fabrication of Precast Prestressed Concrete Products."

Two ⅛" fabric adjusting shims of the dimensions of the exterior bearing pad shall be provided for each bearing pad location. Cost included with Precast Bridge Approach Slab.

A minimum 2½" Ø lifting pins shall be used to engage the lifting loops during handling.

Compressive strength of precast concrete, f 'c shall be 6,000 psi.

Compressive strength of precast concrete during initial lifting, f 'ci shall be 5,000 psi.

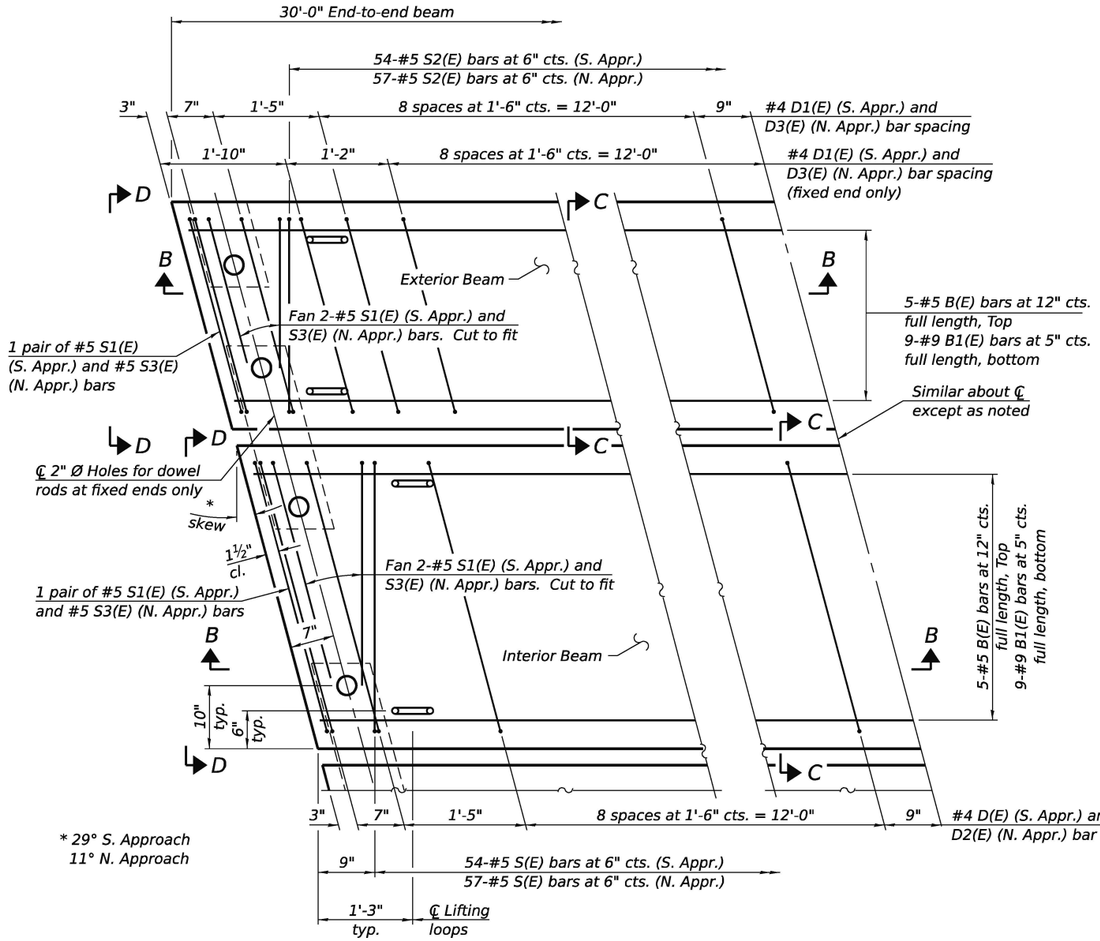

PLAN VIEW
(showing precast bridge approach beams)
(Spacing of D(E) and D1(E) bars may be adjusted up to 3" to miss the dowel rod holes and the lifting loops at the beam ends)

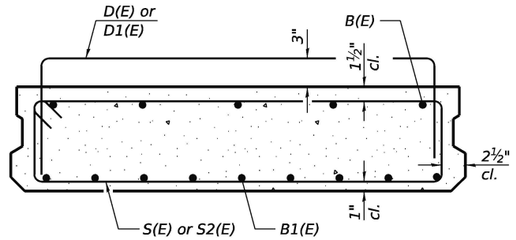

SECTION C-C
(Showing reinforcement)

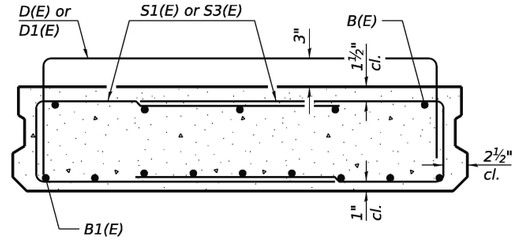

VIEW D-D
(Showing reinforcement)

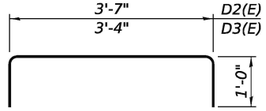

BARS D2(E) & D3(E)

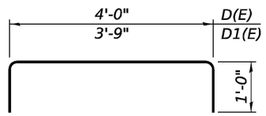

BARS D(E) & D1(E)

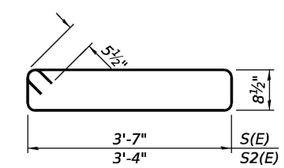

BARS S(E) & S2(E)

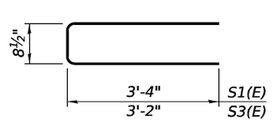

BARS S1(E) & S3(E)

SOUTH APPROACH
BAR LIST
EACH INTERIOR BEAM
(For information only)

Bar	No.	Size	Length	Shape
B(E)	5	#5	29'-8"	—
B1(E)	9	#9	29'-8"	—
D(E)	22	#4	6'-0"	⌐
S(E)	54	#5	9'-6"	⊏
S1(E)	8	#5	7'-4"	⊏

SOUTH APPROACH
BAR LIST
EACH EXTERIOR BEAM
(For information only)

Bar	No.	Size	Length	Shape
B(E)	5	#5	29'-8"	—
B1(E)	9	#9	29'-8"	—
D1(E)	32	#4	5'-9"	⌐
S1(E)	8	#5	7'-4"	⊏
S2(E)	54	#5	9'-0"	⊏

NORTH APPROACH
BAR LIST
EACH INTERIOR BEAM
(For information only)

Bar	No.	Size	Length	Shape
B(E)	5	#5	29'-8"	—
B1(E)	9	#9	29'-8"	—
D2(E)	22	#4	5'-7"	⌐
S(E)	57	#5	9'-6"	⊏
S3(E)	8	#5	7'-1"	⊏

NORTH APPROACH
BAR LIST
EACH EXTERIOR BEAM
(For information only)

Bar	No.	Size	Length	Shape
B(E)	5	#5	29'-8"	—
B1(E)	9	#9	29'-8"	—
D3(E)	32	#4	5'-4"	⌐
S2(E)	57	#5	9'-0"	⊏
S3(E)	8	#5	7'-1"	⊏

MODEL: Br_Sheet_Consultant
FILE NAME: E:\2410-1\struct\Final Design\CADD (ORD)\CADD_Sheets\0320086-66M30-021-AppSlabDtls3.dgn

LIN ENGINEERING, LTD.
Consulting Engineers
Springfield, Illinois

USER NAME = Mike Haley	DESIGNED - CZ	REVISED -	
	DRAWN - SJH	REVISED -	
PLOT SCALE = $SCALE$	CHECKED - MTH	REVISED -	
PLOT DATE = 5/19/2026	CHECK DATE - 10/2025	REVISED -	

STATE OF ILLINOIS
DEPARTMENT OF TRANSPORTATION

BRIDGE APPROACH SLAB DETAILS
STRUCTURE NO. 032-0086
SHEET 21 OF 39 SHEETS

F.A.P. RTE.	SECTION	COUNTY	TOTAL SHEETS	SHEET NO.
326	(111HVB1)ES	GRUNDY	137	72
		CONTRACT NO. 66M30		
	ILLINOIS FED. AID PROJECT			

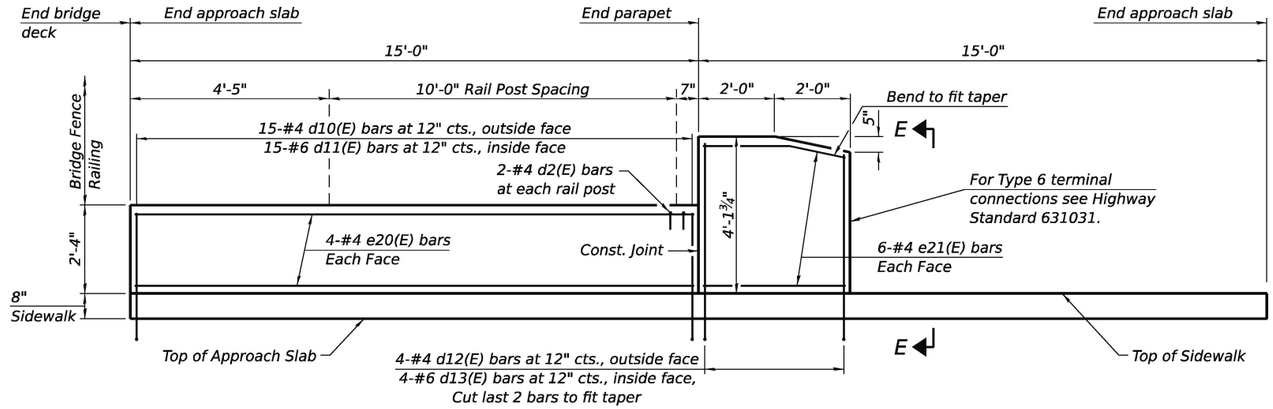

INSIDE ELEVATION OF PARAPET AND CURB

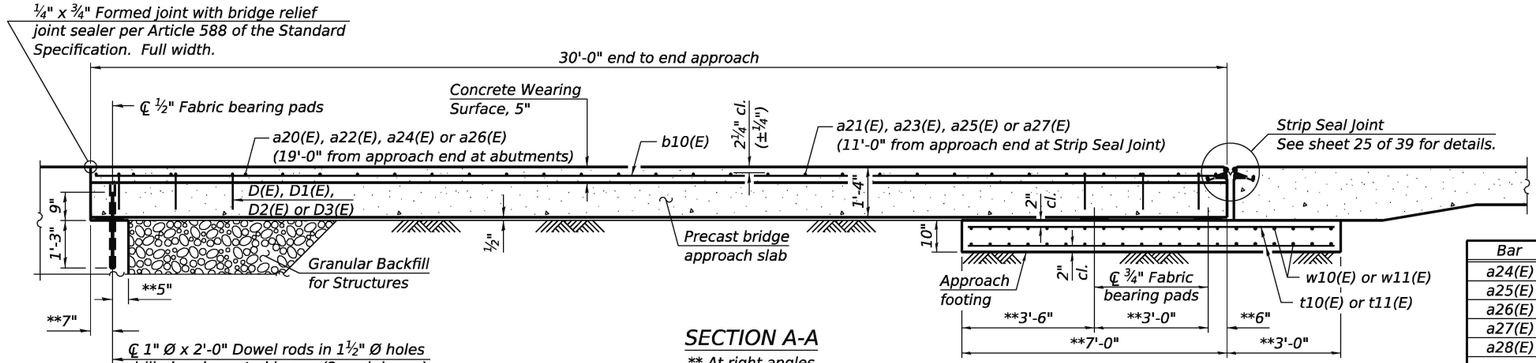

SECTION A-A

** At right angles

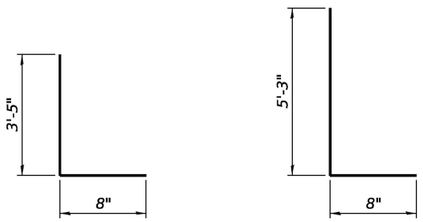

BARS d10(E) & d11(E)

BARS d12(E) & d13(E)

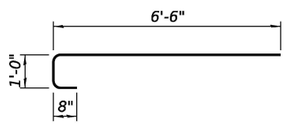

BAR a22(E)

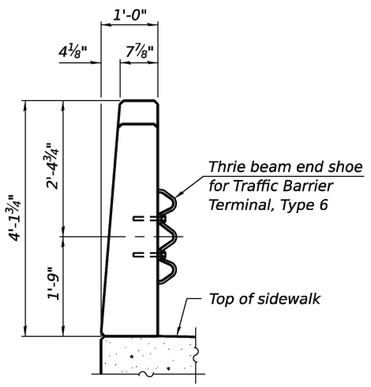

VIEW E-E

Notes:

The joint opening shall be adjusted for temperature per Article 520.04 of the Standard Specifications. However, since this detail is for jointless structures, the length of bridge used to calculate the adjustment shall be equal to half the total bridge length plus the length of the bridge approach slab.

After precast bridge approach slabs have been erected, holes shall be drilled into abutment and anchor dowels placed. Dowel holes shall be filled with non-shrink grout to top of precast slab and cured according to Article 1020.13(a)(3) or 1020.13(a)(5) of the Standard Specifications for a minimum of 24 hours before casting the shear keys and wearing surface.

Any concrete poured monolithically with the wearing surface, such as curbs, shall not be paid for separately, but will be included in the cost of Concrete Wearing Surface, 5".

Parapet concrete shall be paid for as Concrete Superstructure.

Approach footing concrete shall be paid for as Concrete Structures.

The approach footing maximum applied service bearing pressure (Qmax) = 2.0 ksf.

Cost of excavation for approach footing included with Concrete Structures.

For Granular Backfill for Structures and drainage treatment details, see sheet 2 of 39.

Cost of cellular polystyrene is included with Concrete Superstructure.

See parapet bumpout details for light post on Sheet 17 of 39.

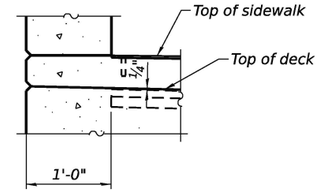

END OF SEAL DETAIL

SOUTH APPROACH BILL OF MATERIAL

Bar	No.	Size	Length	Shape
a24(E)	17	#5	37'-11"	
a25(E)	10	#4	36'-9"	
a26(E)	17	#5	39'-1"	
a27(E)	11	#4	37'-11"	
a28(E)	34	#5	8'-2"	
b10(E)	67	#4	29'-8"	
b11(E)	4	#5	18'-10"	
b12(E)	8	#5	18'-8"	
b13(E)	16	#5	29'-8"	
c(E)	60	#5	2'-4"	
c10(E)	47	#5	7'-7"	
c11(E)	18	#5	6'-7"	
d2(E)	8	#4	2'-2"	
d3(E)	5	#6	10'-5"	
d4(E)	3	#6	5'-5"	
d10(E)	30	#4	3'-5"	
d11(E)	30	#6	3'-5"	
d12(E)	8	#4	5'-11"	
d13(E)	8	#6	5'-11"	
e20(E)	16	#4	14'-8"	
e21(E)	24	#4	3'-8"	
t11(E)	66	#4	11'-1"	
w11(E)	80	#5	37'-5"	
Concrete Superstructure		Cu. Yd.	15.0	
Concrete Structures		Cu. Yd.	23.3	
Reinforcement Bars, Epoxy Coated		Pound	9,160	
Precast Bridge Approach Slab		Sq. Ft.	2,018	
Concrete Wearing Surface, 5"		Sq. Yd.	224	

NORTH APPROACH BILL OF MATERIAL

Bar	No.	Size	Length	Shape
a20(E)	19	#5	33'-9"	
a21(E)	11	#4	32'-9"	
a22(E)	19	#5	34'-9"	
a23(E)	11	#4	33'-9"	
a28(E)	38	#5	8'-2"	
b10(E)	67	#4	29'-8"	
b11(E)	4	#5	18'-10"	
b12(E)	8	#5	18'-8"	
b13(E)	16	#5	29'-8"	
c(E)	60	#5	2'-4"	
c10(E)	41	#5	7'-7"	
c11(E)	20	#5	6'-7"	
d2(E)	8	#4	2'-2"	
d10(E)	30	#4	3'-5"	
d11(E)	30	#6	3'-5"	
d12(E)	8	#4	5'-11"	
d13(E)	8	#6	5'-11"	
e20(E)	16	#4	14'-8"	
e21(E)	24	#4	3'-8"	
t10(E)	66	#4	9'-10"	
w10(E)	80	#5	33'-3"	
Concrete Superstructure		Cu. Yd.	15.0	
Concrete Structures		Cu. Yd.	20.8	
Reinforcement Bars, Epoxy Coated		Pound	8,600	
Precast Bridge Approach Slab		Sq. Ft.	2,018	
Concrete Wearing Surface, 5"		Sq. Yd.	224	

MODEL: Br_Sheet_Consultant
FILE NAME: E:\2410-1\struct\Final Design\CADD (ORD)\CADD_Sheets\0320086-66M30-022-AppSlabDtls4.dgn

LIN ENGINEERING, LTD.
Consulting Engineers
Springfield, Illinois

USER NAME = Lin10-PC	DESIGNED - CZ	REVISED -	
	DRAWN - SJH	REVISED -	
PLOT SCALE = $SCALE$	CHECKED - MTH	REVISED -	
PLOT DATE = 6/5/2026	CHECK DATE - 10/2025	REVISED -	

STATE OF ILLINOIS
DEPARTMENT OF TRANSPORTATION

BRIDGE APPROACH SLAB DETAILS
STRUCTURE NO. 032-0086
SHEET 22 OF 39 SHEETS

F.A.P. RTE.	SECTION	COUNTY	TOTAL SHEETS	SHEET NO.
326	(111HVB1)ES	GRUNDY	137	73
		CONTRACT NO. 66M30		
		ILLINOIS	FED. AID PROJECT	

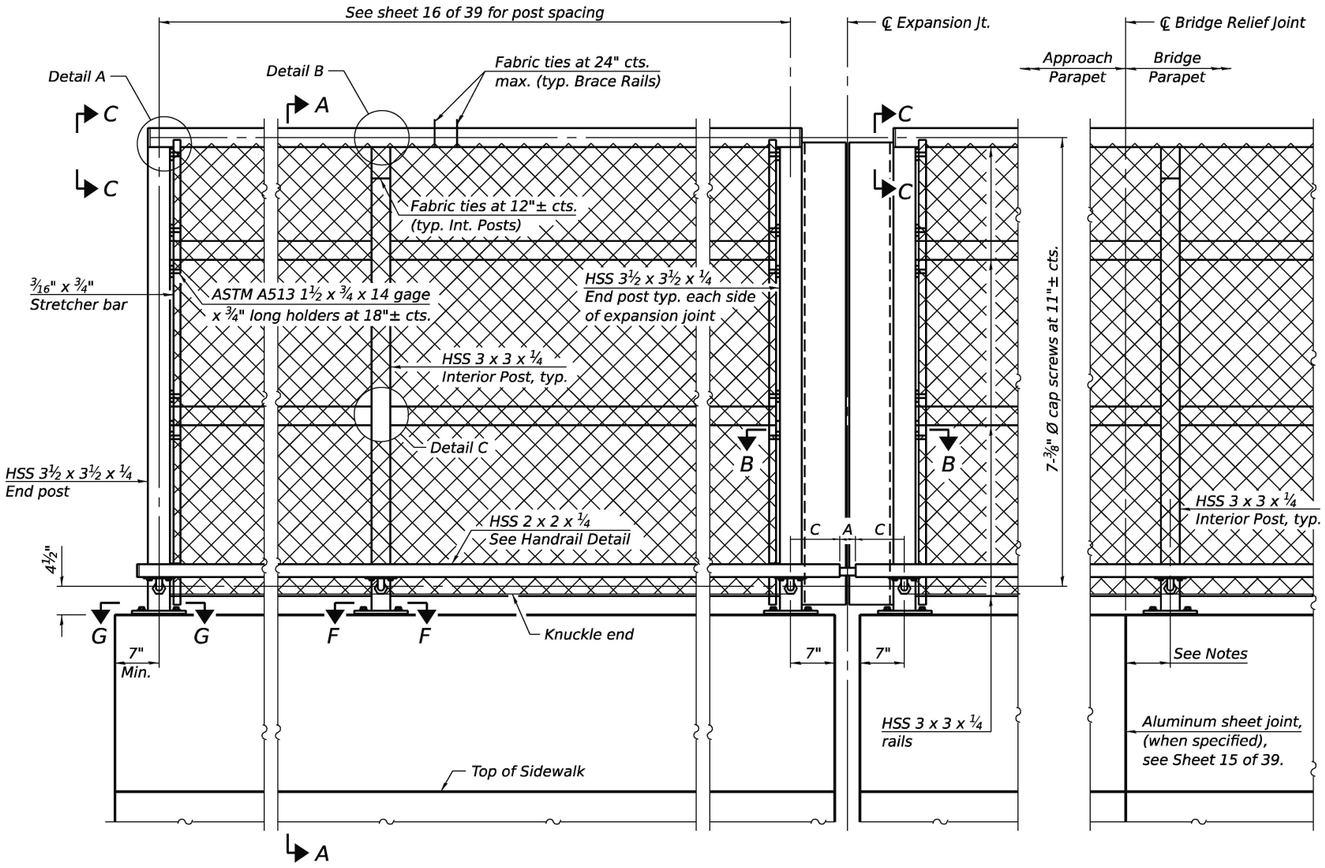

(e.g. at Bridge Relief Joints)

ELEVATION BRIDGE FENCE RAILING, CURVED

(Inside face)

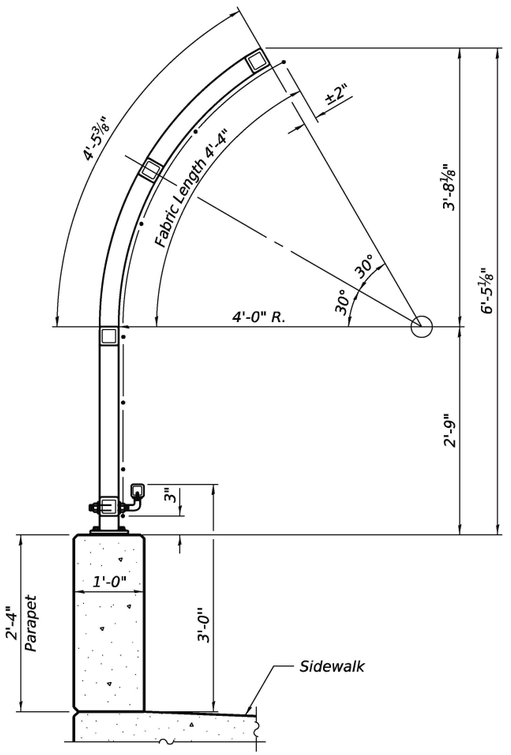

SECTION A-A

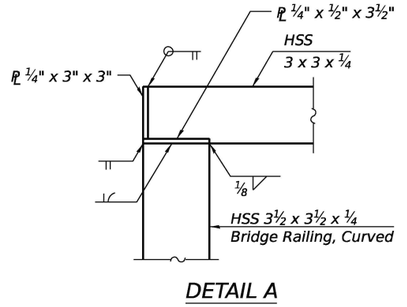

DETAIL A

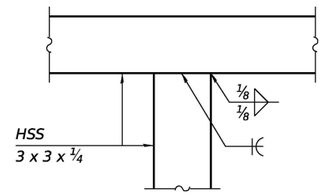

DETAIL B

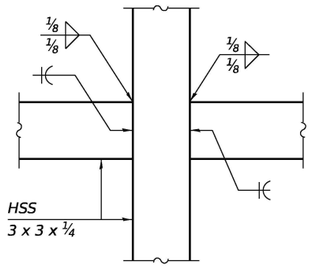

DETAIL C

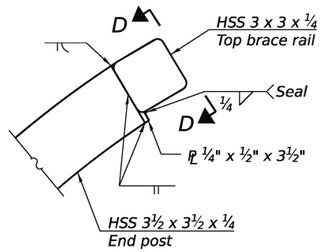

VIEW C-C

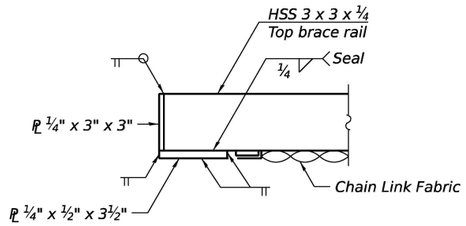

VIEW D-D

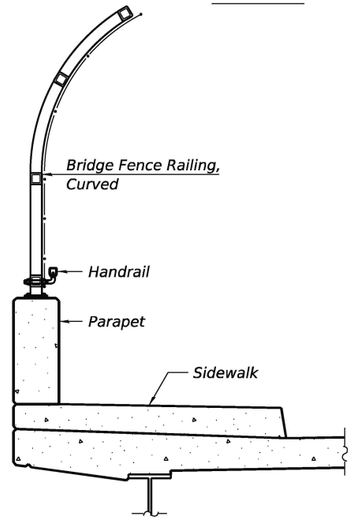

SECTION THRU DECK

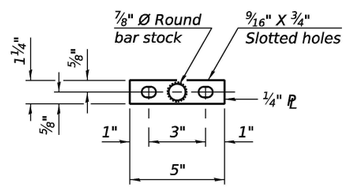

VIEW E-E

(Handrail)

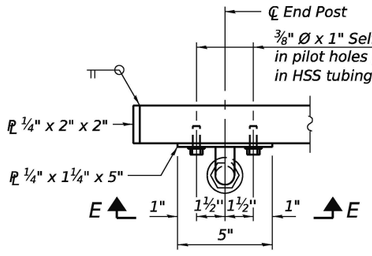

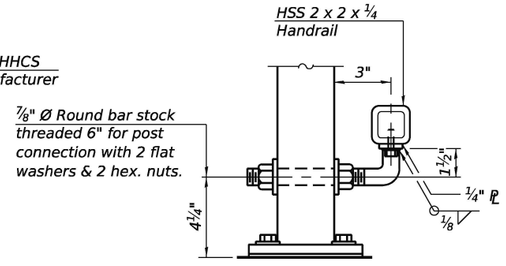

HANDRAIL DETAIL

RAILING CRITERIA

NCHRP 350 Test Level	4
Railing Weight (plf)	70
Max Post Spacing	10'-0''

R-32

4-4-2025

(Sheet 1 of 2)

MODEL: Br_Sheet_Consultant
FILE NAME: E:\2410-1\struct\Final Design\CADD (ORD)\CADD_Sheets\032086-66M30-023-FenceRailing1.dgn

LIN ENGINEERING, LTD.
Consulting Engineers
Springfield, Illinois

USER NAME = Mike Haley		DESIGNED - CZ		REVISED -	
		DRAWN - SJH		REVISED -	
PLOT SCALE = $SCALE$		CHECKED - MTH		REVISED -	
PLOT DATE = 5/19/2026		CHECK DATE - 10/2025		REVISED -	

STATE OF ILLINOIS
DEPARTMENT OF TRANSPORTATION

BRIDGE FENCE RAILING CURVED
STRUCTURE NO. 032-0086

SHEET 23 OF 39 SHEETS

F.A.P. RTE.	SECTION	COUNTY	TOTAL SHEETS	SHEET NO.
326	(111HVB1)ES	GRUNDY	137	74
		CONTRACT NO. 66M30		
	ILLINOIS	FED. AID PROJECT		

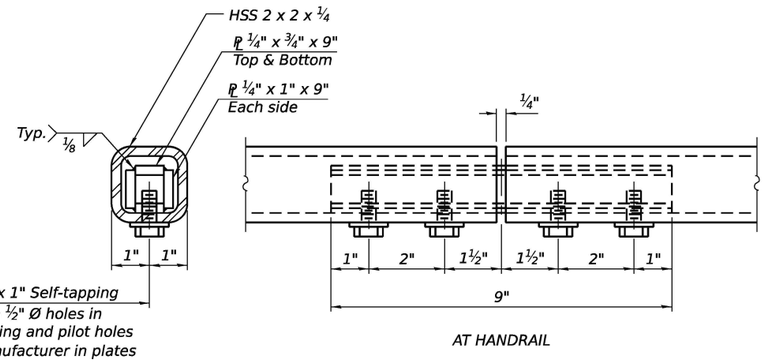

AT HANDRAIL

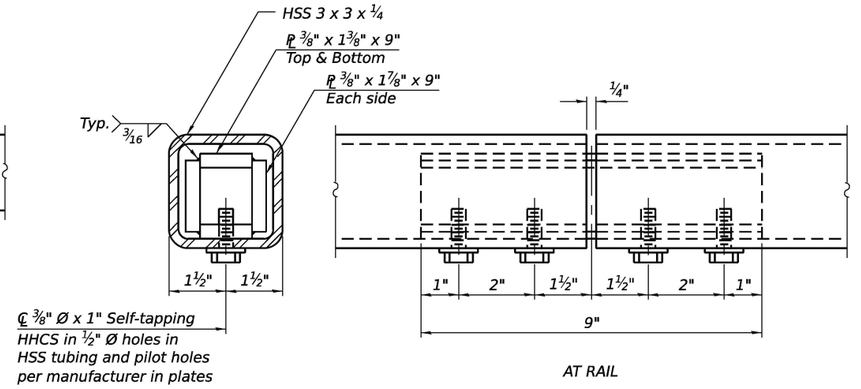

AT RAIL

MATERIAL SPLICE

Notes:

Place reinforcement bars to miss anchor rod locations.

CVN testing is not required for the HSS tubing used in the Bridge Fence Railing, Curved.

All HSS tubing used for the Handrail shall be CVN tested according to Article 1006.34(b) of the Standard Specifications.

All heavy hex nuts shall be according to ASTM A 563 grade DH.

All fully threaded anchor rods shall be ASTM F1554 grade 105.

The post base plate shall be fastened to the curb snug tight and given an additional ⅛" turn.

Contractor shall offset posts to miss any aluminum sheet or cork joints for sufficient installation of the anchorage assembly.

Rail splice inserts may be built out of bent plates of the same thicknesses and outside geometry limits as the 4 plate rail splice inserts shown.

All steel rail elements shall be galvanized according to Article 509.05 of the Standard Specifications.

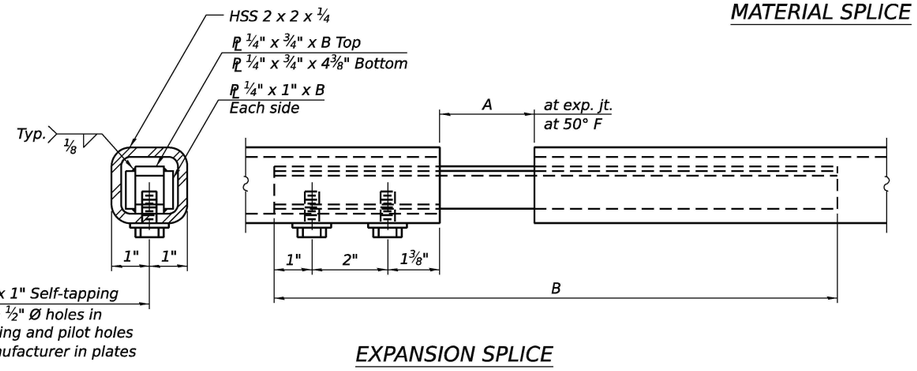

EXPANSION SPLICE

(Weld bottom plate on bolt side)

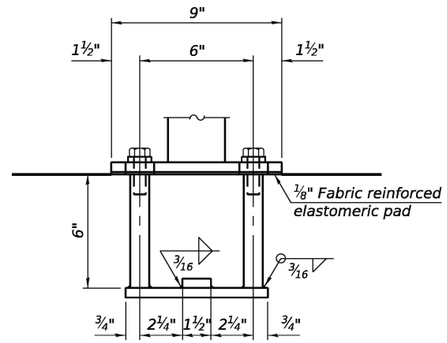

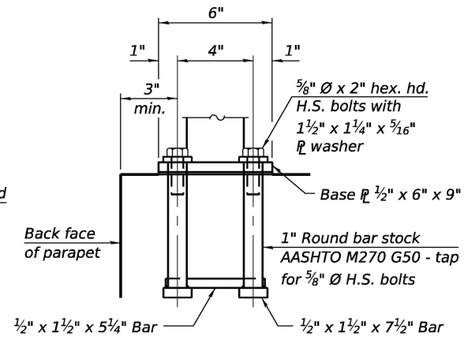

ANCHORAGE ASSEMBLY

The Bridge Fence Railing, Curved fasteners for end posts near expansion joints may need to be installed prior to installing the bent plates.

In lieu of the cast-in-place anchor device shown, the Contractor has the option of drilling and setting ⅝" Ø fully threaded anchor rods with the same plate washers as specified above and heavy hex lock nuts according to Article 509.06 of the Standard Specifications. Embedment shall be according to the manufacturer's specifications.

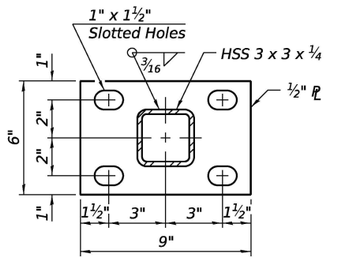

SECTION F-F

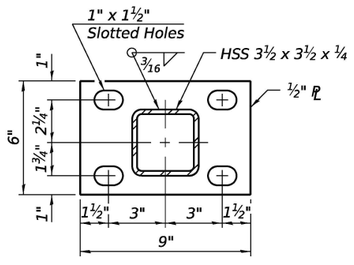

SECTION G-G

Location	T	A	B	C	D
Over Strip Seal Jt.	≤4"	2½"	1'-5⅞"	6¼"	3¾"
Over Finger or Modular Jt.	≤9½"	5½"	1'-11⅝"	9¾"	6"
Over Finger or Modular Jt.	≤15"	8¼"	2'-5⅛"	13⅞"	8¾"
At Light Poles	8"	NA	NA	11¾"	10"
At Bridge Relief Joints	NA - Material Splices Per Fabricator				

T= ; total movement based on total temperature range from -20°F to 120°F along centerline of roadway at expansion joint.
OR
8" hand-hole access for maintenance of light poles (when present; replace splice with 8" gap)

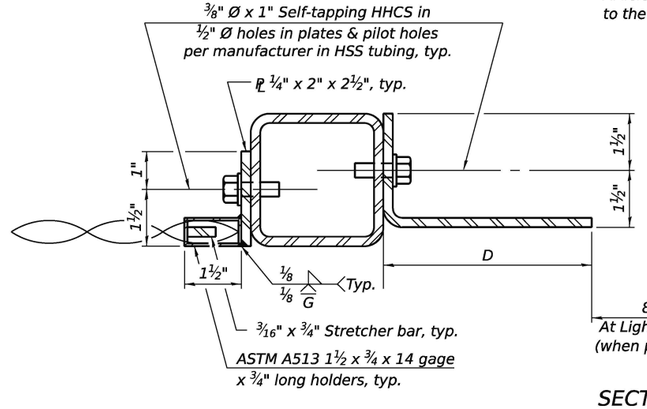

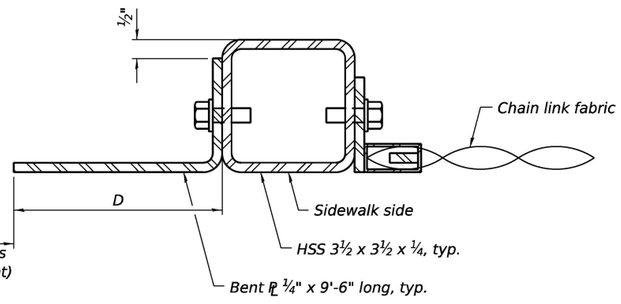

SECTION B-B

BILL OF MATERIAL

Item	Unit	Quantity
Bridge Fence Railing, Curved	Foot	847

MODEL: Br_Sheet_Consultant
FILE NAME: E:\2410-1\struct\Final Design\CADD (ORD)\CADD_Sheets\0320086-66M30-024-FenceRailing2.dgn

LIN ENGINEERING, LTD.
Consulting Engineers
Springfield, Illinois

USER NAME = Mike Haley	DESIGNED - CZ	REVISED -	
	DRAWN - SJH	REVISED -	
PLOT SCALE = $SCALE$	CHECKED - MTH	REVISED -	
PLOT DATE = 5/19/2026	CHECK DATE - 10/2025	REVISED -	

STATE OF ILLINOIS
DEPARTMENT OF TRANSPORTATION

BRIDGE FENCE RAILING CURVED
STRUCTURE NO. 032-0086
SHEET 24 OF 39 SHEETS

F.A.P. RTE.	SECTION	COUNTY	TOTAL SHEETS	SHEET NO.
326	(111HVB1)ES	GRUNDY	137	75
		CONTRACT NO. 66M30		
		ILLINOIS	FED. AID PROJECT	

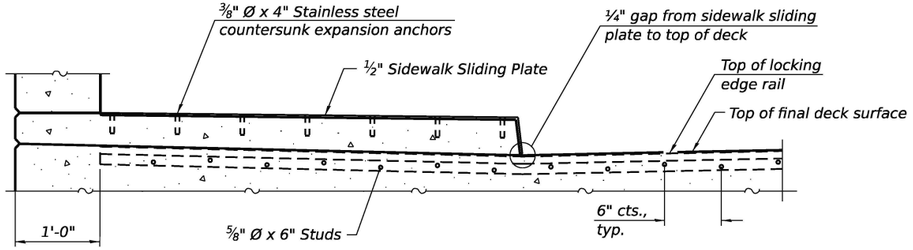

SECTION AT RAISED SIDEWALK

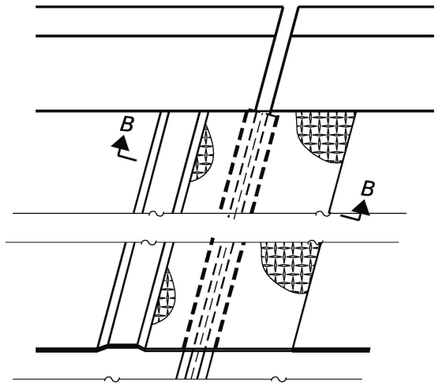

PLAN AT RAISED SIDEWALK

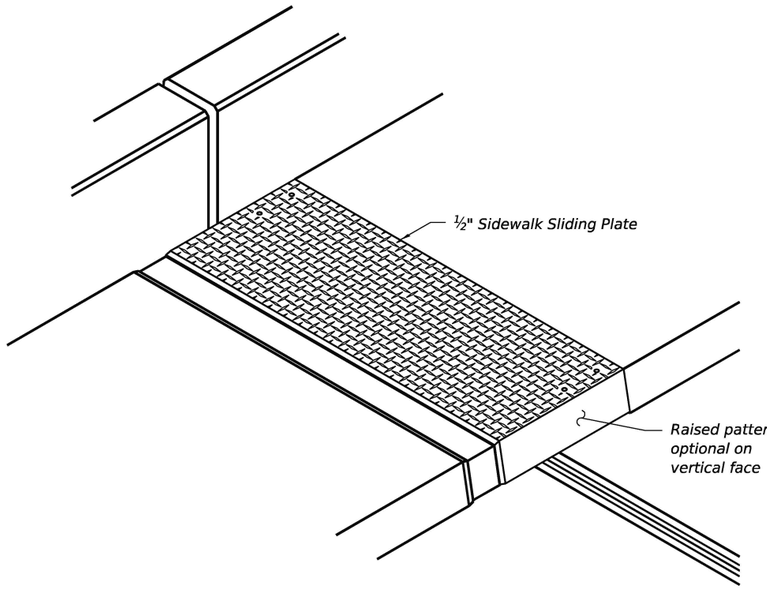

TRIMETRIC VIEW

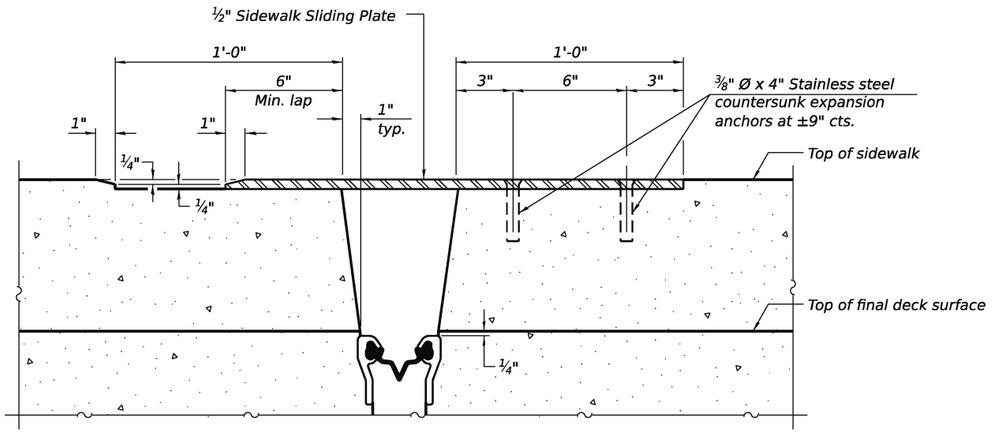

SECTION B-B

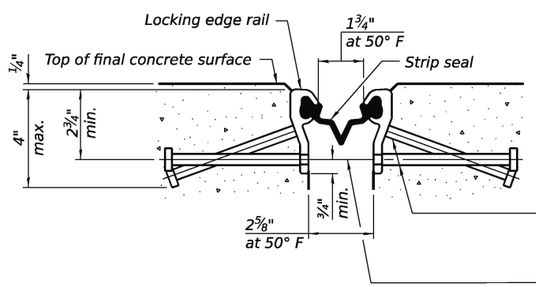

SHOWING ROLLED RAIL JOINT

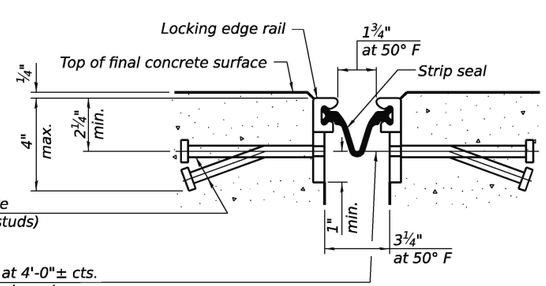

SHOWING WELDED RAIL JOINT

SECTION A-A

* Granular or solid flux filled headed studs conforming to Article 1006.32 of the Std. Specs., automatically end welded.

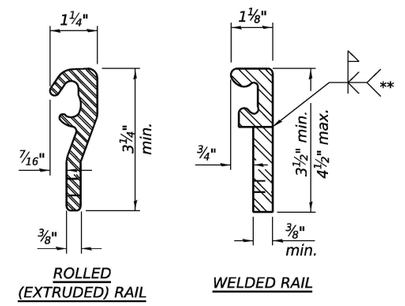

ROLLED (EXTRUDED) RAIL

WELDED RAIL

LOCKING EDGE RAILS

** Back gouge not required if complete joint penetration is verified by mock-up.

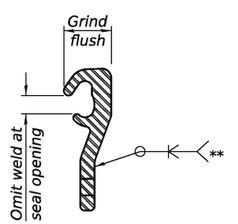

LOCKING EDGE RAIL SPLICE

The inside of the locking edge rail groove shall be free of weld residue. Rolled rail shown, welded rail similar.

Notes:

The strip seal shall be made continuous and shall have a minimum thickness of 1/4". The configuration of the strip seal shall match the configuration of the locking edge rails. Open or "webbed" strip seal gland configurations are not permitted. The gland shall be sized for a maximum rated movement of 4 inches.

The locking edge rails depicted are configured for typical applications and are conceptual only. The actual configuration of the locking edge rails and matching strip seal may vary from manufacturer to manufacturer provided they fit the application and meet the minimum anchorage shown. Flanged edge rails, however, will not be allowed. Locking edge rails may exceed the 4 1/2" maximum depth provided the anchorage system is revised according to the manufacturer's recommendation.

The manufacturer's recommended installation methods shall be followed.

All steel components shall be galvanized after fabrication according to Article 520.03 of the Standard Specifications.

The Maximum space between locking edge rail segments shall be 3/16" and sealed with a suitable sealant; however, any rail joint within 10' measured perpendicular to the face of the curb or parapet shall be welded as shown in the locking edge rail splice detail.

The top surface of sidewalk sliding plates shall have a raised pattern according to ASTM A786.

Cost of parapet sliding plates, sidewalk sliding plates, embedded plates, anchorage studs, and expansion anchors included with Preformed Joint Strip Seal.

The concrete opening below the strip seal will vary based on the locking edge rail chosen by the Contractor. Deck and parapet lengths shown elsewhere in the plans are dimensioned to the concrete opening, not the joint opening, and are based on the rolled locking edge rail. If the Contractor elects to use a different locking edge rail, dimensional adjustments may be required. One exception to this would be the strip seal joint at the end of the precast bridge approach slab. For these cases the pavement connector length shall be adjusted, not the length of the bridge approach slab.

BILL OF MATERIAL

Item	Unit	Total
Preformed Joint Strip Seal	Foot	143

MODEL: Br_Sheet_Consultant
FILE NAME: E:\2410-1\struct\Final Design\CADD (ORD)\CADD_Sheets\0320086-66M30-025-PreUnitStripSeal.dgn

LIN ENGINEERING, LTD.
Consulting Engineers
Springfield, Illinois

USER NAME = Lin10-PC		DESIGNED - CZ		REVISED -	
		DRAWN - SJH		REVISED -	
PLOT SCALE = $SCALE$		CHECKED - MTH		REVISED -	
PLOT DATE = 6/5/2026		CHECK DATE - 10/2025		REVISED -	

STATE OF ILLINOIS
DEPARTMENT OF TRANSPORTATION

PREFORMED JOINT STRIP SEAL
STRUCTURE NO. 032-0086
SHEET 25 OF 39 SHEETS

F.A.P. RTE.	SECTION	COUNTY	TOTAL SHEETS	SHEET NO.
326	(111HVB1)ES	GRUNDY	137	76
		CONTRACT NO. 66M30		
	ILLINOIS	FED. AID PROJECT		

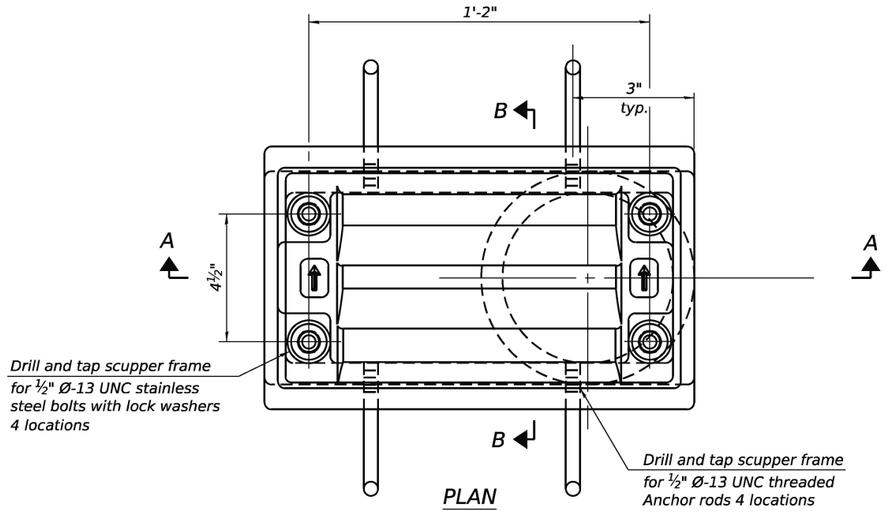

PLAN

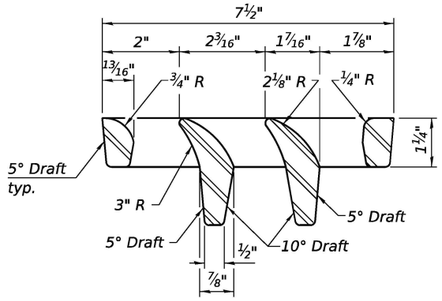

VANE GRATE DETAIL

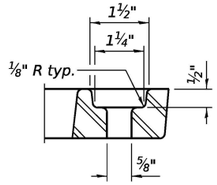

GRATE BOLT HOLE DETAIL

Notes:

All cast iron parts shall be gray iron conforming to the requirements of AASHTO M105, Class 35B and AASHTO M306.

Bolts, anchor rods, nuts and washers shall be according to ASTM A307 and shall be galvanized according to AASHTO M232. As an alternate stainless steel may be used.

Stainless steel hardware shall be according to Article 1006.29(d) of the Standard Specifications.

Structural steel weldments of equal sections and of the same configuration may be substituted for the cast iron scupper frames and downspouts; however, the scupper grates shall remain cast iron. Fillet or full penetration welds shall be used for the weldments. Details shall be submitted to the Engineer for approval.

Structural steel scupper frames and downspouts, when utilized, shall be galvanized according to AASHTO M111.

As an alternate, fiberglass may be used for downspouts according to ASTM D2996 with a short-time rupture strength hoop tensile stress of 30,000 psi min. in lieu of the cast iron or structural steel.

Exterior surfaces of downspouts and exterior exposed surfaces of the scupper frame below deck shall be painted according to Article 506 with the finish coat as specified. The exterior surfaces shall be cleaned according to the Society of Protective Coating's Spec. SS PC-SP1 prior to painting.

The Contractor shall take appropriate measures to assure that Protective Coat is not applied to the scupper.

Cost of the grate, frame, downspout, anchor rods, nuts and washers including complete installation of the scupper shall be paid for at the contract unit price for Drainage Scuppers, DS-11.

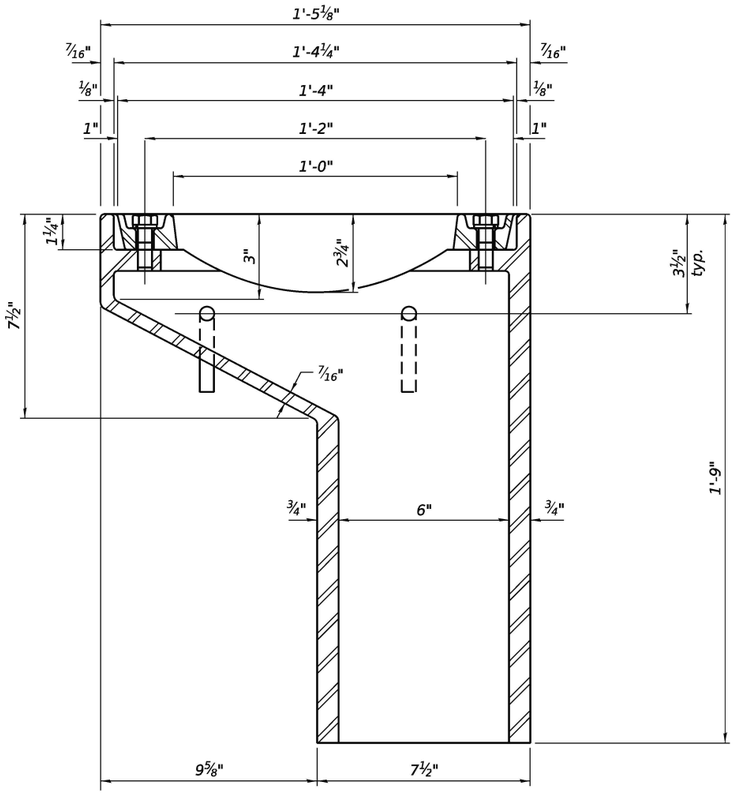

SECTION A-A

See sheet 15 of 39 for scupper location relative to parapet.

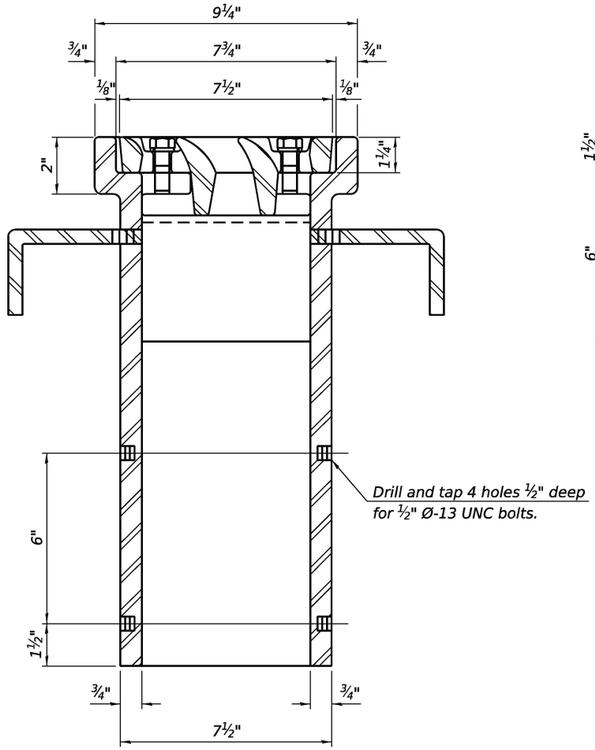

SECTION B-B

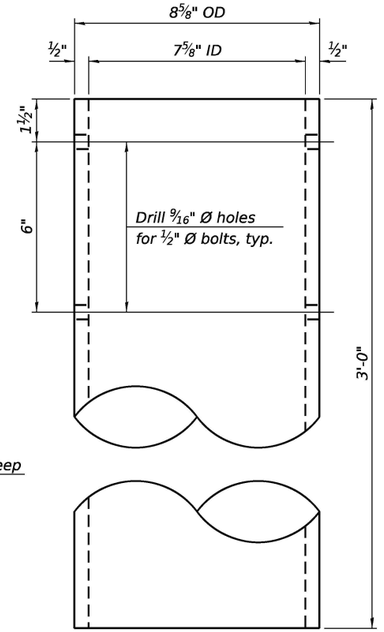

DOWNSPOUT

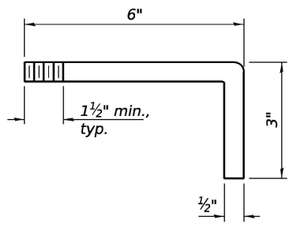

ANCHOR ROD DETAIL

BILL OF MATERIAL

Item	Unit	Quantity
Drainage Scuppers, DS-11	Each	6

DS-11 4-4-2025

LIN ENGINEERING, LTD.
Consulting Engineers
Springfield, Illinois

USER NAME = LIN03-PC	DESIGNED - CZ	REVISED -	
	DRAWN - SJH	REVISED -	
PLOT SCALE = $SCALE$	CHECKED - MTH	REVISED -	
PLOT DATE = 6/4/2026	CHECK DATE - 10/2025	REVISED -	

STATE OF ILLINOIS
DEPARTMENT OF TRANSPORTATION

DRAINAGE SCUPPERS DS-11
STRUCTURE NO. 032-0086
SHEET 26 OF 39 SHEETS

F.A.P. RTE.	SECTION	COUNTY	TOTAL SHEETS	SHEET NO.
326	(111HVB1)ES	GRUNDY	137	77
		CONTRACT NO. 66M30		
		ILLINOIS	FED. AID PROJECT	

MODEL: Br_Sheet_Consultant
FILE NAME: E:\2410-1\struct\Final Design\CADD (ORD)\CADD_Sheets\0320086-66M30-026-DS11Scupper.dgn

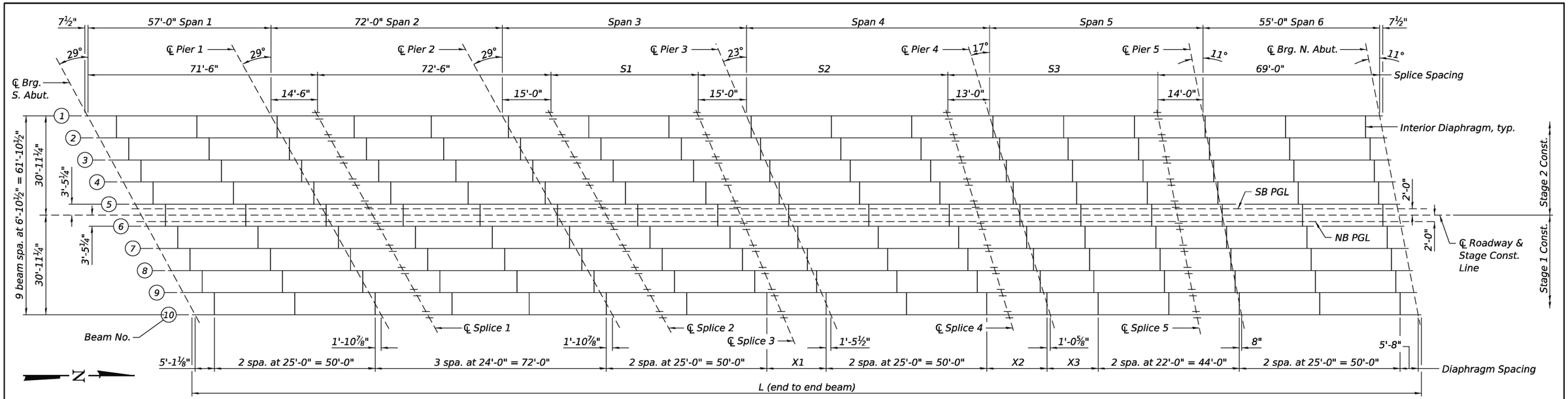

FRAMING PLAN

(All beams are W27x194, AASHTO M270, Grade 50 CVN)

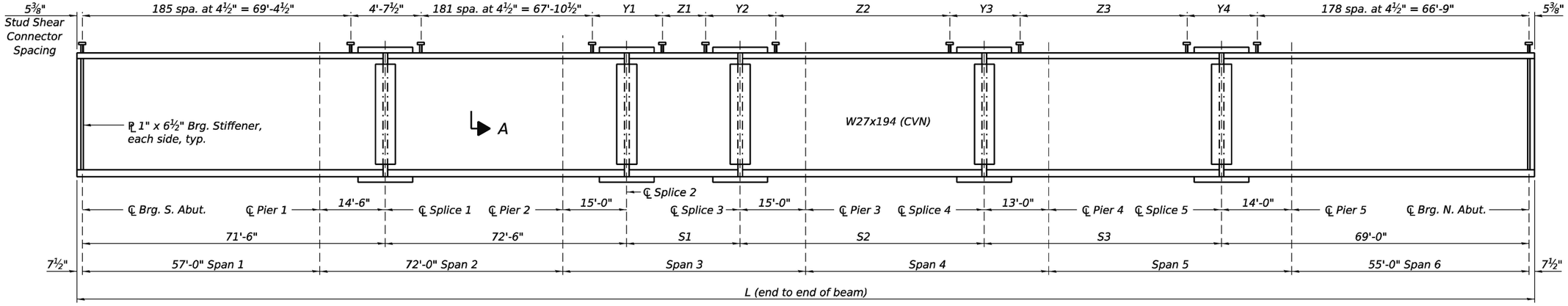

BEAM ELEVATION

DIMENSION TABLE

Beam	L	Span 3	Span 4	Span 5	S1	S2	S3	X1	X2	X3
1	403'-4⅝"	76'-0¼"	75'-8⅛"	66'-5⅜"	46'-0¼"	77'-8⅛"	65'-5⅜"	-	-	-
2	400'-10⅞	75'-1½"	74'-10¼"	65'-8⅛"	45'-1½"	76'-10¼"	64'-8⅛"	25'-6⅞"	25'-3⅛"	22'-0¾"
3	398'-5¼"	74'-2¾"	74'-0½"	64'-11"	44'-2¾"	76'-0½"	63'-11"	24'-8⅛	24'-5⅜"	21'-3½"
4	395'-11½"	73'-4⅛"	73'-2¾"	64'-1¾"	43'-4⅛"	75'-2¾"	63'-1¾"	23'-9⅜"	23'-7⅝"	20'-6⅜"
5	393'-5⅞"	72'-5⅜"	72'-4⅞"	63'-4⅝"	42'-5⅜"	74'-4⅞"	62'-4⅝"	22'-10¾"	22'-9¾"	19'-9⅛"
6	391'-0⅛"	71'-6⅝"	71'-7⅛"	62'-7⅜"	41'-6⅝"	73'-7⅛"	61'-7⅜"	22'-0"	22'-0"	19'-0"
7	388'-6½"	70'-7⅞"	70'-9¼"	61'-10¼"	40'-7⅞"	72'-9¼"	60'-10¼"	21'-1¼"	21'-2¼"	18'-2⅞"
8	386'-0¾"	69'-9¼"	69'-11½"	61'-1"	39'-9¼"	71'-11½"	60'-1"	20'-2⅝"	20'-4⅜"	17'-5⅝"
9	383'-7⅛"	68'-10½"	69'-1¾"	60'-3⅞"	38'-10½"	71'-1¾"	59'-3⅞"	19'-3⅞"	19'-6⅝"	16'-8½"
10	381-1⅛"	67'-11¾"	68'-3⅞"	59'-6⅝"	37'-11¾"	70'-3⅞"	58'-6⅝"	18'-5⅛"	18'-8⅞"	15'-11¼"

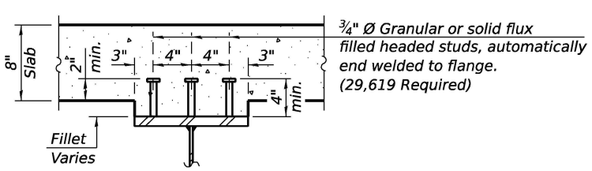

¾" Ø Granular or solid flux filled headed studs, automatically end welded to flange. (29,619 Required)

SECTION A-A

Notes:

Load carrying components designated "CVN" shall conform to the Charpy-V-Notch Impact Energy Requirements, Zone 2.

All diaphragms shall be installed as steel is erected and secured with erection pins and bolts except as otherwise noted. Individual diaphragms at supports may be temporarily disconnected to install bearing anchor bolts.

MODEL: Br_Sheet_Consultant
FILE NAME: E:\2410-1\struct\Final Design\CADD (ORD)\CADD_Sheets\032086-66M30-027-SteelFraming.dgn

LIN ENGINEERING,LTD.
Consulting Engineers
Springfield, Illinois

USER NAME = LIN03-PC | PLOT SCALE = $SCALE$ | PLOT DATE = 6/19/2026
DESIGNED - CZ | DRAWN - SJH | CHECKED - MTH | CHECK DATE - 10/2025
REVISED - | REVISED - | REVISED - | REVISED -

STATE OF ILLINOIS
DEPARTMENT OF TRANSPORTATION

FRAMING PLAN
STRUCTURE NO. 032-0086
SHEET 27 OF 39 SHEETS

F.A.P. RTE.	SECTION	COUNTY	TOTAL SHEETS	SHEET NO.
326	(111HVB1)ES	GRUNDY	137	78
		CONTRACT NO. 66M30		
	ILLINOIS	FED. AID PROJECT		

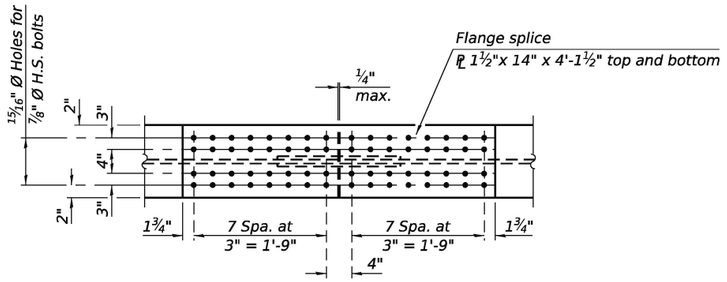

PLAN (TOP & BOTTOM FLANGES)

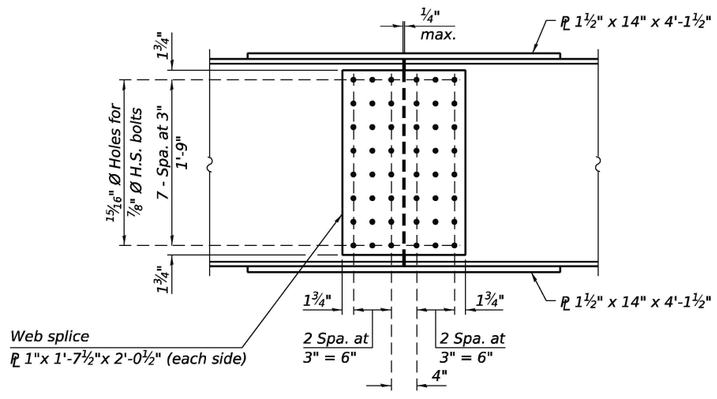

ELEVATION

SPLICE DETAIL
(50 Required)

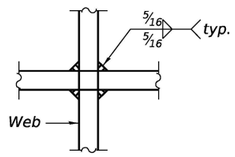

WEB WELD DETAIL

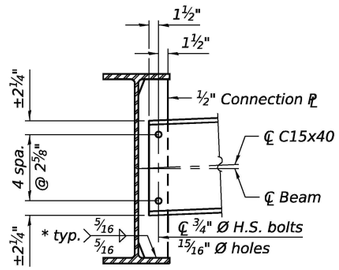

INTERIOR DIAPHRAGM
(153 required)
* 3 sides of each connection ℄.

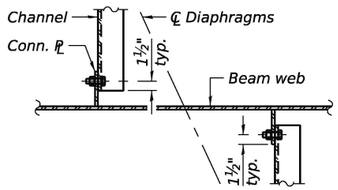

DETAIL A

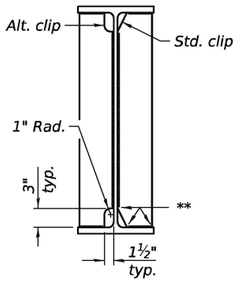

WELD LIMITS AND CLIP DETAILS
** Stop welds ¼" (±⅛") from edges as shown. Typical.

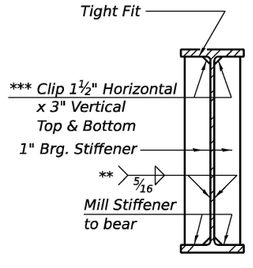

BEARING STIFFENER
AT ABUTMENT
(20 locations)
*** Clip may be rounded for ease of shop painting.

STUD SHEAR CONNECTOR INFORMATION

Beam	Y1	Y2	Y3	Y4	Z1	Z2	Z3
1	4'-8⅜"	4'-8"	4'-7½"	4'-9"	110 spa. at 4½" = 41'-3"	195 spa. at 4½" = 73'-1½"	162 spa. at 4½" = 60'-9"
2	4'-7"	4'-8⅞"	4'-9¾"	4'-9"	108 spa. at 4½" = 40'-6"	192 spa. at 4½" = 72'-0"	160 spa. at 4½" = 60'-0"
3	4'-8⅞"	4'-9"	4'-9⅝"	4'-9"	105 spa. at 4½" = 39'-4½"	190 spa. at 4½" = 71'-3"	158 spa. at 4½" = 59'-3"
4	4'-8"	4'-8¾"	4'-8"	4'-9"	103 spa. at 4½" = 38'-7½"	188 spa. at 4½" = 70'-6"	156 spa. at 4½" = 58'-6"
5	4'-7⅛"	4'-7¼"	4'-7¾"	4'-9"	101 spa. at 4½" = 37'-10½"	186 spa. at 4½" = 69'-9"	154 spa. at 4½" = 57'-9"
6	4'-8½"	4'-8⅜"	4'-7"	4'-9"	98 spa. at 4½" = 36'-9"	184 spa. at 4½" = 69'-0"	152 spa. at 4½" = 57'-0"
7	4'-7⅝"	4'-7¼"	4'-6⅜"	4'-9"	96 spa. at 4½" = 36'-0"	182 spa. at 4½" = 68'-3"	150 spa. at 4½" = 56'-3"
8	4'-6⅞"	4'-8"	4'-8⅛"	4'-9"	94 spa. at 4½" = 35'-3"	179 spa. at 4½" = 67'-1½"	148 spa. at 4½" = 55'-6"
9	4'-8¼"	4'-8⅝"	4'-8"	4'-9"	91 spa. at 4½" = 34'-1½"	177 spa. at 4½" = 66'-4½"	146 spa. at 4½" = 54'-9"
10	4'-7⅛"	4'-8"	4'-7½"	4'-8½"	89 spa. at 4½" = 33'-4½"	175 spa. at 4½" = 65'-7½"	144 spa. at 4½" = 54'-0"

TOP OF BEAM ELEVATIONS
(for fabrication only)

Location	Beam 1	Beam 2	Beam 3	Beam 4	Beam 5	Beam 6	Beam 7	Beam 8	Beam 9	Beam 10
℄ Brg. S. Abut.	544.34	544.66	544.98	545.30	545.62	545.81	545.85	545.80	545.93	545.97
℄ Brg. Pier 1	546.77	547.06	547.34	547.62	547.90	548.03	548.03	548.02	548.03	548.02
℄ Splice 1	547.39	547.67	547.94	548.21	548.48	548.60	548.59	548.58	548.56	548.54
℄ Brg. Pier 2	549.07	549.30	549.52	549.74	549.96	550.04	549.98	549.91	549.84	549.77
℄ Splice 2	549.51	549.72	549.93	550.14	550.35	550.41	550.34	550.26	550.18	550.09
℄ Splice 3	550.25	550.41	550.58	550.74	550.91	550.93	550.81	550.70	550.58	550.46
℄ Brg. Pier 3	550.29	550.45	550.61	550.76	550.92	550.93	550.80	550.69	550.56	550.43
℄ Splice 4	550.47	550.59	550.71	550.82	550.95	550.94	550.78	550.63	550.47	550.32
℄ Brg. Pier 4	550.30	550.42	550.53	550.64	550.76	550.75	550.58	550.42	550.26	550.10
℄ Splice 5	549.61	549.72	549.83	549.94	550.05	550.02	549.85	549.68	549.52	549.35
℄ Brg. Pier 5	549.25	549.36	549.46	549.57	549.67	549.64	549.47	549.29	549.13	548.95
℄ Brg. N. Abut.	547.83	547.93	548.02	548.11	548.20	548.15	547.96	547.77	547.59	547.40

Notes:
All flange and web splice plates shall be AASHTO M270 Grade 50 (CVN).
Two hardened washers required for each set of oversized holes.
Alternate channels of equal depth and larger weight are permitted to facilitate material acquisition. Alternate channels, if utilized, shall be provided at no additional cost to the Department.

MODEL: Br_Sheet_Consultant
FILE NAME: E:\2410-1\struct\Final Design\CADD (ORD)\CADD_Sheets\0320086-66M30-028-SteelDetails1.dgn

LIN ENGINEERING, LTD.
Consulting Engineers
Springfield, Illinois

USER NAME = Lin10-PC	DESIGNED - CZ	REVISED -	
	DRAWN - SJH	REVISED -	
PLOT SCALE = $SCALE$	CHECKED - MTH	REVISED -	
PLOT DATE = 6/5/2026	CHECK DATE - 10/2025	REVISED -	

STATE OF ILLINOIS
DEPARTMENT OF TRANSPORTATION

STEEL DETAILS
STRUCTURE NO. 032-0086
SHEET 28 OF 39 SHEETS

F.A.P. RTE.	SECTION	COUNTY	TOTAL SHEETS	SHEET NO.
326	(111HVB1)ES	GRUNDY	137	79
		CONTRACT NO. 66M30		
		ILLINOIS	FED. AID PROJECT	

BEAM 1 MOMENT TABLE												
		0.4 Sp. 1	Pier 1	0.5 Sp. 2	Pier 2	0.5 Sp. 3	Pier 3	0.5 Sp. 4	Pier 4	0.5 Sp. 5	Pier 5	0.6 Sp. 6
I_s	(in^4)	7,860	7,860	7,860	7,860	7,860	7,860	7,860	7,860	7,860	7,860	7,860
I_c (n)	(in^4)	19,315	19,315	19,315	19,315	19,315	19,315	19,315	19,315	19,315	19,315	19,315
I_c (3n)	(in^4)	14,091	14,091	14,091	14,091	14,091	14,091	14,091	14,091	14,091	14,091	14,091
I_c (cr)	(in^4)	-	9,429	-	9,429	-	9,429	-	9,429	-	9,429	-
S_s	(in^3)	559	559	559	559	559	559	559	559	559	559	559
S_c (n)	(in^3)	775	-	775	-	775	-	775	-	775	-	775
S_c (3n)	(in^3)	701	-	701	-	701	-	701	-	701	-	701
S_c (cr)	(in^3)	-	602	-	602	-	602	-	602	-	602	-
S_x	(in^3)	-	-	-	-	-	-	-	-	-	-	-
DC1	(k/')	1.089	1.089	1.089	1.089	1.089	1.089	1.089	1.089	1.089	1.089	1.089
M_{DC1}	('k)	239	441	227	488	260	532	272	451	173	381	235
DC2	(k/')	0.399	0.399	0.399	0.399	0.399	0.399	0.399	0.399	0.399	0.399	0.399
M_{DC2}	('k)	90	165	83	183	99	196	106	164	68	140	89
DW	(k/')	0.130	0.130	0.130	0.130	0.130	0.130	0.130	0.130	0.130	0.130	0.130
M_{DW}	('k)	29	54	27	60	32	64	35	54	22	46	29
LLDF		0.475	0.475	0.475	0.475	0.475	0.475	0.475	0.475	0.475	0.475	0.475
M_{L+IM}	('k)	498	521	523	593	562	591	583	518	492	460	469
f_t (Strength I)	(ksi)	0	0	0	0	0	0	0	0	0	0	0
$M_u + 1/3\ f_t\ S_x$	('k)	1,326	1,750	1,343	1,966	1,479	2,039	1,546	1,756	1,195	1,524	1,269
$\Phi_f M_n$	('k)	3,755	-	3,755	-	3,755	-	3,755	-	3,755	-	3,755
f_s DC1	(ksi)	5.13	9.46	4.87	10.47	5.58	11.41	5.83	9.67	3.71	8.17	5.04
* f_s DC2	(ksi)	1.54	3.29	1.42	3.64	1.70	3.90	1.82	3.27	1.16	2.79	1.52
* f_s DW	(ksi)	0.50	1.08	0.46	1.19	0.54	1.27	0.60	1.07	0.38	0.91	0.49
* f_s (f_L+IM)	(ksi)	7.71	10.39	8.10	11.83	8.70	11.78	9.04	10.33	7.62	9.17	7.27
* f_t (Service II)	(ksi)	0	0	0	0	0	0	0	0	0	0	0
* $f_s + f_t/2$ (Service II)	(ksi)	17.19	27.33	17.28	30.67	19.12	31.90	20.00	27.45	15.16	23.79	16.50
Service II Resistance	(ksi)	47.50	47.50	47.50	47.50	47.50	47.50	47.50	47.50	47.50	47.50	47.50
* $f_s + f_t/3$ (Strength I)	(ksi)	22.58	35.74	22.73	40.12	25.13	41.66	26.27	35.87	20.00	31.12	21.66
$\Phi_f F_n$	(ksi)	-	50.00	-	50.00	-	50.00	-	50.00	-	50.00	-
V_f	(k)	31.6	33.9	21.4	36.5	22.1	38.3	22.3	39.4	19.1	38.0	33.5

* Composite Stresses at Piers calculated using Cracked Section Properties.

BEAM 3 MOMENT TABLE												
		0.4 Sp. 1	Pier 1	0.5 Sp. 2	Pier 2	0.5 Sp. 3	Pier 3	0.5 Sp. 4	Pier 4	0.5 Sp. 5	Pier 5	0.6 Sp. 6
I_s	(in^4)	7,860	7,860	7,860	7,860	7,860	7,860	7,860	7,860	7,860	7,860	7,860
I_c (n)	(in^4)	19,315	19,315	19,315	19,315	19,315	19,315	19,315	19,315	19,315	19,315	19,315
I_c (3n)	(in^4)	14,091	14,091	14,091	14,091	14,091	14,091	14,091	14,091	14,091	14,091	14,091
I_c (cr)	(in^4)	-	9,429	-	9,429	-	9,429	-	9,429	-	9,429	-
S_s	(in^3)	559	559	559	559	559	559	559	559	559	559	559
S_c (n)	(in^3)	775	-	775	-	775	-	775	-	775	-	775
S_c (3n)	(in^3)	701	-	701	-	701	-	701	-	701	-	701
S_c (cr)	(in^3)	-	602	-	602	-	602	-	602	-	602	-
S_x	(in^3)	-	-	-	-	-	-	-	-	-	-	-
DC1	(k/')	0.943	0.943	0.943	0.943	0.943	0.943	0.943	0.943	0.943	0.943	0.943
M_{DC1}	('k)	205	383	199	410	210	436	226	371	139	321	205
DC2	(k/')	0.399	0.399	0.399	0.399	0.399	0.399	0.399	0.399	0.399	0.399	0.399
M_{DC2}	('k)	89	165	86	179	93	185	102	157	65	134	91
DW	(k/')	0.130	0.130	0.130	0.130	0.130	0.130	0.130	0.130	0.130	0.130	0.130
M_{DW}	('k)	29	54	28	58	30	60	33	51	21	44	30
LLDF		0.600	0.600	0.600	0.600	0.600	0.600	0.600	0.600	0.600	0.600	0.600
M_{L+IM}	('k)	633	616	609	669	618	649	649	582	577	527	589
f_t (Strength I)	(ksi)	0	0	0	0	0	0	0	0	0	0	0
$M_u + 1/3\ f_t\ S_x$	('k)	1,519	1,844	1,463	1,995	1,505	2,002	1,595	1,755	1,295	1,558	1,446
$\Phi_f M_n$	('k)	3,822	-	3,822	-	3,822	-	3,822	-	3,822	-	3,822
f_s DC1	(ksi)	4.40	8.22	4.27	8.79	4.50	9.35	4.85	7.96	2.98	6.89	4.40
* f_s DC2	(ksi)	1.53	3.29	1.47	3.57	1.58	3.69	1.75	3.13	1.11	2.67	1.56
* f_s DW	(ksi)	0.50	1.08	0.48	1.16	0.51	1.20	0.57	1.02	0.36	0.88	0.51
* f_s (f_L+IM)	(ksi)	9.80	12.29	9.43	13.35	9.58	12.94	10.05	11.61	8.93	10.52	9.12
* f_t (Service II)	(ksi)	0	0	0	0	0	0	0	0	0	0	0
* $f_s + f_t/2$ (Service II)	(ksi)	19.16	28.56	18.48	30.88	19.05	31.06	20.22	27.20	16.06	24.11	18.33
Service II Resistance	(ksi)	47.50	47.50	47.50	47.50	47.50	47.50	47.50	47.50	47.50	47.50	47.50
* $f_s + f_t/3$ (Strength I)	(ksi)	25.30	37.50	24.39	40.55	25.14	40.74	26.67	35.71	21.28	31.67	24.18
$\Phi_f F_n$	(ksi)	-	50.00	-	50.00	-	50.00	-	50.00	-	50.00	-
V_f	(k)	59.5	64.0	39.6	68.4	39.2	68.7	38.9	71.4	36.4	68.9	62.6

* Composite Stresses at Piers calculated using Cracked Section Properties.

BEAM 1 REACTION TABLE								
		S. Abut.	Pier 1	Pier 2	Pier 3	Pier 4	Pier 5	N. Abut.
LLDF		0.537	0.542	0.543	0.543	0.543	0.538	0.558
OCF		1.11	1.11	1.11	1.08	1.06	1.04	1.04
R_{DC1}	(k)	52.2	75.9	79.1	82.6	75.8	70.7	52.0
R_{DC2}	(k)	12.6	28.4	29.6	30.8	28.3	26.4	12.6
R_{DW}	(k)	7.2	9.2	9.7	10.0	9.2	8.6	7.2
R_L	(k)	68.3	78.8	81.2	81.4	79.1	74.9	71.0
R_{IM}	(k)	17.9	16.5	16.6	16.5	16.3	15.9	18.7
R_{Total} (Strength I)(Impact)	(k)	242.6	311.0	321.5	328.1	310.9	293.1	248.5
R_{Total} (Strength I)(No Impact)	(k)	211.3	282.1	292.4	299.3	282.4	265.3	215.7

Note: Abutment reactions include dead load and live load from the approach slab and the concrete diaphragms.

DEFLECTION LIMITS

BEAM 3 DEFLECTION TABLE		
Δ ALLOW	(in)	0.912
Δ_{L+IM}	(in)	0.659

Δ ALLOW: Maximum allowable Service I Live load plus impact deflection according to AASHTO LRFD Bridge Design Specifications 9.5.2.

Δ_{L+IM}: Calculated value Service I live load plus impact deflection.

BEAM 3 REACTION TABLE								
		S. Abut.	Pier 1	Pier 2	Pier 3	Pier 4	Pier 5	N. Abut.
LLDF		0.831	0.838	0.838	0.838	0.838	0.838	0.862
OCF		1.11	1.11	1.11	1.08	1.06	1.04	1.04
R_{DC1}	(k)	49.1	65.7	67.3	69.5	63.9	60.3	49.0
R_{DC2}	(k)	12.6	28.4	29.3	30.0	27.7	26.0	12.7
R_{DW}	(k)	7.2	9.3	9.5	9.8	9.0	8.5	7.3
R_L	(k)	89.4	120.3	123.5	123.5	120.0	114.6	93.3
R_{IM}	(k)	23.2	25.4	25.5	25.3	25.0	24.5	24.5
R_{Total} (Strength I)(Impact)	(k)	284.9	386.5	395.8	399.6	381.9	363.9	294.2
R_{Total} (Strength I)(No Impact)	(k)	244.3	342.2	351.2	355.3	338.1	321.0	251.3

Note: Abutment reactions include dead load and live load from the approach slab and the concrete diaphragms.

I_s , S_s : Non-composite moment of inertia and section modulus of the steel section used for computing f_s (Total-Strength I, and Service II) due to non-composite dead loads ($in.^4$ and $in.^3$).

I_c (n), S_c (n): Composite moment of inertia and section modulus of the steel and deck based upon the modular ratio, "n", used for computing f_s (Total-Strength I, and Service II) in uncracked sections due to short-term composite live loads ($in.^4$ and $in.^3$).

I_c (3n), S_c (3n): Composite moment of inertia and section modulus of the steel and deck based upon 3 times the modular ratio, "3n", used for computing f_s (Total-Strength I, and Service II) in uncracked sections, due to long-term composite (superimposed) dead loads ($in.^4$ and $in.^3$).

I_c (cr), S_c (cr): Composite moment of inertia and section modulus of the steel and longitudinal deck reinforcement, used for computing f_s (Total-Strength I and Service II) in cracked sections, due to both short-term composite live loads and long-term composite (superimposed) dead loads ($in.^4$ and $in.^3$).

S_x : Section modulus about the major axis of a section to the controlling flange, tension or compression, taken as yield moment with respect to the controlling flange over the yield strength of the controlling flange ($in.^3$).

DC1: Un-factored non-composite dead load (kips/ft.).

M_{DC1}: Un-factored moment due to non-composite dead load (kip-ft.).

DC2: Un-factored long-term composite (superimposed excluding future wearing surface) dead load (kips/ft.).

M_{DC2}: Un-factored moment due to long-term composite (superimposed excluding future wearing surface) dead load (kip-ft.).

DW: Un-factored long-term composite (superimposed future wearing surface only) dead load (kips/ft.).

M_{DW} : Un-factored moment due to long-term composite (superimposed future wearing surface only) dead load (kip-ft.).

LLDF: Live Load Distribution Factor for moment and shear computed according to Article 4.6.2.2 and further IDOT provisions.

M_{L+IM}: Un-factored live load moment plus dynamic load allowance (impact) (kip-ft.).

M_u : Strength I load combination of factored design moments (kip-ft.).
$1.25\ (M_{DC1} + M_{DC2}) + 1.5\ M_{DW} + 1.75\ M_{L+IM}$

f_t : Factored calculated flange lateral bending stress as calculated using Article 6.10.1.6 and as further simplified by IDOT provisions (ksi).

$\Phi_f M_n$: Factored nominal flexural resistance of the section determined as specified in Article 6.10.7.1 or A6 as applicable (kip-ft.).

f_s DC1: Un-factored stress at edge of flange for controlling steel flange due to vertical non-composite dead loads as calculated below (ksi).
M_{DC1} / S_s

f_s DC2: Un-factored stress at edge of flange for controlling steel flange due to vertical composite dead loads as calculated below (ksi).
M_{DC2} / S_c (3n) or M_{DC2} / S_c (cr) as applicable.

f_s DW: Un-factored stress at edge of flange for controlling steel flange due to vertical composite future wearing surface loads as calculated below (ksi).
M_{DW} / S_c (3n) or M_{DW} / S_c (cr) as applicable.

f_s (f_L+ IM): Un-factored stress at edge of flange for controlling steel flange due to vertical composite live load plus impact loads as calculated below (ksi).
M_{L+IM} / S_c (n) or M_{L+IM} / S_c (cr) as applicable.

$f_s + f_t / 2$ (Service II): Sum of stresses as computed below (ksi).
f_s DC1 + f_s DC2 + f_s DW + 1.3 f_s (f_L+ IM) + f_t /2

Service II Resistance: Composite ($0.95R_hF_{yf}$) or noncomposite ($0.80R_hF_{yf}$) stress capacity according to Article 6.10.4.2 (ksi).

$f_s + f_t / 3$ (Strength I): Sum of stresses as computed below on non-compact sections (ksi).
$1.25\ (f_s$ DC1 + f_s DC2) + 1.5 f_s DW + 1.75 f_s (f_L+ IM) + f_t /3

$\Phi_f F_n$: Factored nominal flexural resistance of the section as specified in Article 6.10.7.2 or 6.10.8 as applicable (ksi).

V_f: Maximum factored shear range in span computed according to Article 6.10.10.

OCF: Obtuse Correction Factor according to Article 4.6.2.2.3c or as further simplified by IDOT provisions.

R_{DC1}: Un-factored reaction due to non-composite dead load (kip).

R_{DC2}: Un-factored reaction due to long-term composite (superimposed excluding future wearing surface) dead load (kip).

R_{DW} : Un-factored reaction due to long-term composite (superimposed future wearing surface only) dead load (kip).

R_L : Un-factored live load reaction (kip).

R_{IM} : Un-factored dynamic load allowance (impact) (kip).

R_{Total} (Strength I)(Impact): Strength I load combination of factored design reactions (kip).
$1.25\ (R_{DC1} + R_{DC2}) + 1.5R_{DW} + 1.75\ (R_L + R_{IM})$

R_{Total} (Strength I)(No Impact): Strength I load combination of factored design reactions, not including dynamic load allowance (Impact) (kip).
$1.25\ (R_{DC1} + R_{DC2}) + 1.5R_{DW} + 1.75\ (R_L)$

MODEL: Br_Sheet_Consultant
FILE NAME: \\192.168.0.53\linjobs\2410-1\struct\Final Design\CADD (ORD)\CADD_Sheets\032086-66M30-029-SteelDetails2.dgn

LIN ENGINEERING, LTD.
Consulting Engineers
Springfield, Illinois

USER NAME = Lin10-PC	DESIGNED - CZ	REVISED -	STATE OF ILLINOIS DEPARTMENT OF TRANSPORTATION	STEEL DETAILS STRUCTURE NO. 032-0086 SHEET 29 OF 39 SHEETS
	DRAWN - SJH	REVISED -		
PLOT SCALE = $SCALE$	CHECKED - MTH	REVISED -		
PLOT DATE = 6/18/2026	CHECK DATE - 10/2025	REVISED -		

F.A.P. RTE.	SECTION	COUNTY	TOTAL SHEETS	SHEET NO.
326	(111HVB1)ES	GRUNDY	137	80
		CONTRACT NO. 66M30		
		ILLINOIS	FED. AID PROJECT	

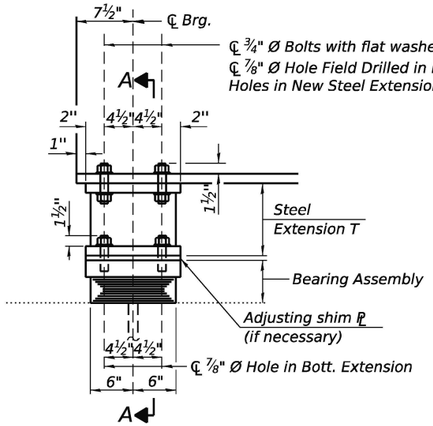

ELEVATION AT ABUTS.

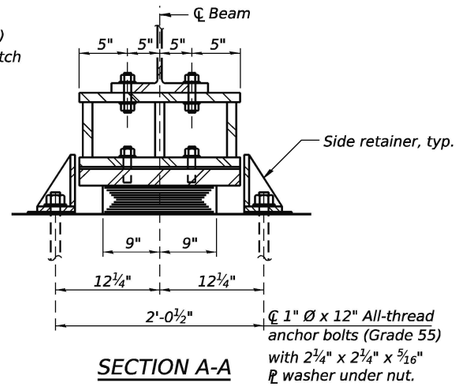

SECTION A-A

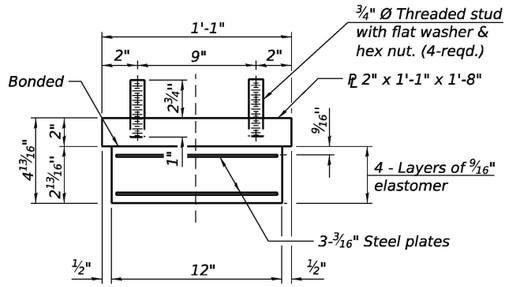

BEARING ASSEMBLY

Note:
Shim plates shall not be placed under bearing assembly.

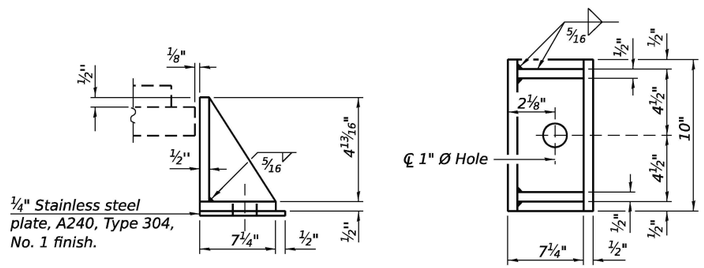

SIDE RETAINER

Equivalent rolled angle with stiffeners will be allowed in lieu of welded plates.

TYPE I ELASTOMERIC EXP. BRG. AT ABUTMENTS

(20 required)

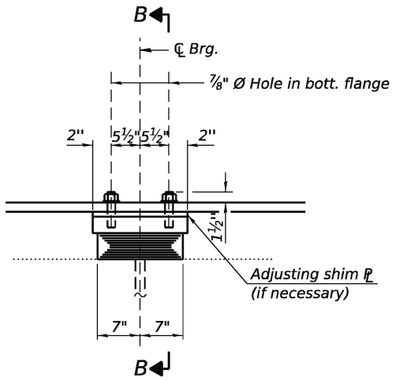

ELEVATION AT PIERS 1, 2, 4 & 5

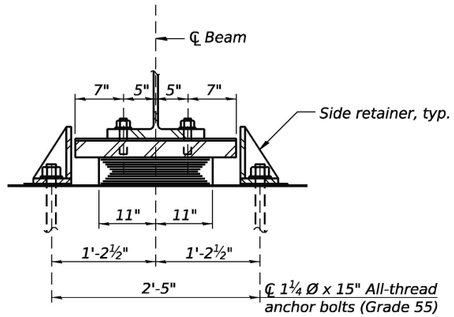

SECTION B-B

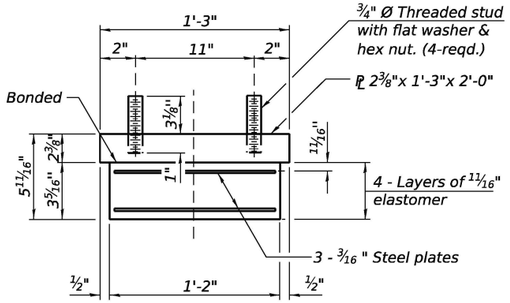

BEARING ASSEMBLY

Note:
Shim plates shall not be placed under bearing assembly.

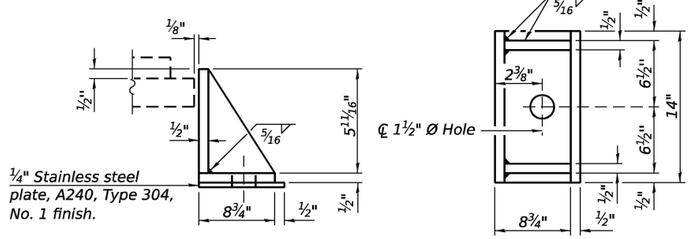

SIDE RETAINER

Equivalent rolled angle with stiffeners will be allowed in lieu of welded plates.

TYPE I ELASTOMERIC EXP. BRG. AT PIERS 1, 2, 4 & 5

(40 required)

Notes:
The structural steel plates of the Bearing Assembly shall conform to the requirements of AASHTO M270 Grade 50.
All bearing plates and steel extensions shall be AASHTO M270 Grade 50.
Two ⅛ in. adjusting shims shall be provided for each bearing in addition to all other plates or shims and placed as shown on bearing details.
Side retainers and stainless steel plates shall be included in the cost of Elastomeric Bearing Assembly, Type I.
Anchor bolts and side retainers at all supports shall be installed as each member is erected unless an equivalent temporary means of lateral restraint is used.
See sheet 31 of 39 for steel extension details.
All bearing plates, shim plates, side retainers, anchor bolts, nuts and washers shall be galvanized according to AASHTO M111 or M232 as applicable.

BILL OF MATERIAL

Item	Unit	Total
Elastomeric Bearing Assembly Type I	Each	60
Anchor Bolts, 1"	Each	30
Anchor Bolts, 1¼"	Each	40

MODEL: Br_Sheet_Consultant
FILE NAME: \\192.168.0.53\Jobs\2410-1\struct\Final Design\CADD (ORD)\CADD_Sheets\0320086-66M30-030-BearingDetails1.dgn

LIN ENGINEERING,LTD.
Consulting Engineers
Springfield, Illinois

USER NAME = Lin10-PC | DESIGNED - CZ | REVISED -
DRAWN - SJH | REVISED -
PLOT SCALE = $SCALE$ | CHECKED - MTH | REVISED -
PLOT DATE = 6/5/2026 | CHECK DATE - 10/2025 | REVISED -

STATE OF ILLINOIS
DEPARTMENT OF TRANSPORTATION

BEARING DETAILS
STRUCTURE NO. 032-0086
SHEET 30 OF 39 SHEETS

F.A.P. RTE.	SECTION	COUNTY	TOTAL SHEETS	SHEET NO.
326	(111HVB1)ES	GRUNDY	137	81
		CONTRACT NO. 66M30		
	ILLINOIS FED. AID PROJECT			

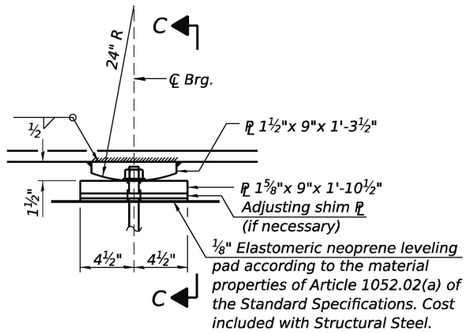

ELEVATION AT PIER 3

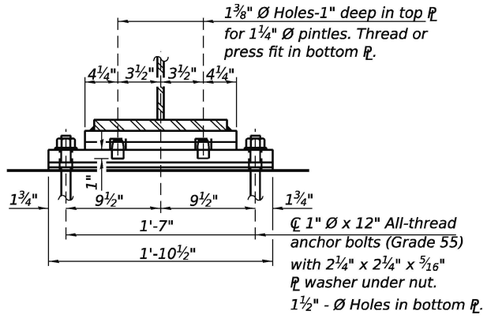

SECTION C-C

FIXED BEARING AT PIER 3

(10 required)

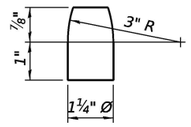

PINTLE

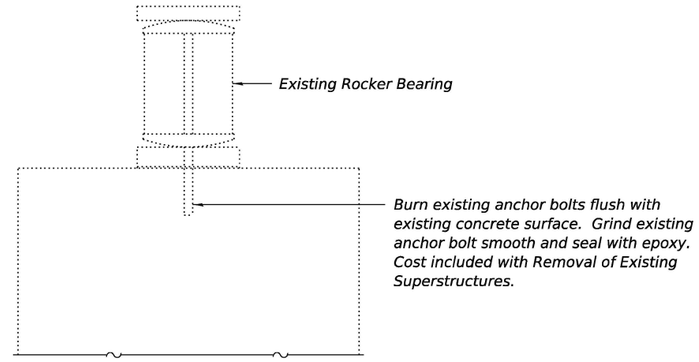

EXISTING BEARING REMOVAL

Notes:

The Contractor is to verify the existing dimensions prior to fabricating the bearing extensions and fill plates. Cost of extensions and fill plates included with Furnishing and Erecting Structural Steel.

Cost of the Fixed Bearing Assemblies shall be included in Furnishing and Erecting Structural Steel.

All bearing plates shall be AASHTO M270 Grade 50; Pintles shall be AASHTO M270 Grade 36.

Fixed bearing components shall be metalized.

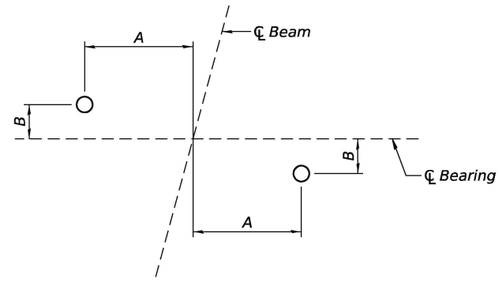

ANCHOR BOLT LAYOUT

Location	A	B
S. Abut.	10¾"	6"
Pier 1	11¾"	6½"
Pier 2	11¾"	6½"
Pier 3	8¾"	3¾"
Pier 4	1'-0⅞"	4"
Pier 5	1'-1¼"	2⅝"
N. Abut.	1'-0"	2⅜"

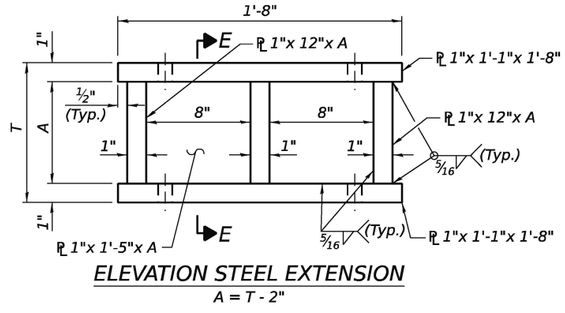

ELEVATION STEEL EXTENSION

A = T - 2"

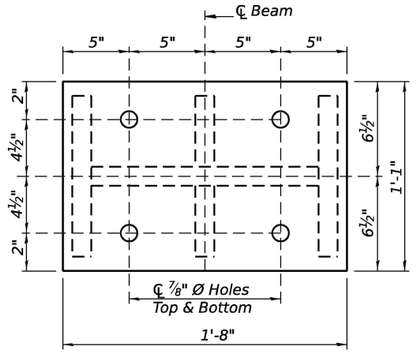

PLAN STEEL EXTENSION

STEEL EXTENSIONS AT ABUTMENTS

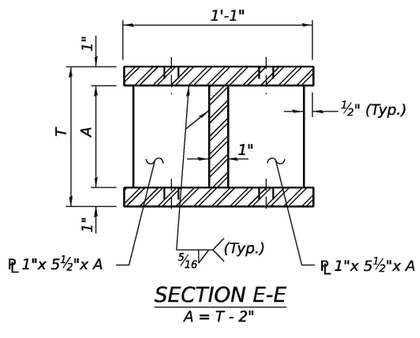

SECTION E-E

A = T - 2"

BEARING EXTENSION THICKNESS "T"

	S. Abut.	N. Abut.
Beam 1	8⅞"	12⅛"
Beam 2	9¾"	12"
Beam 3	10"	12⅜"
Beam 4	10¾"	12¼"
Beam 5	11¼"	12½"
Beam 6	11⅞"	12⅞"
Beam 7	12⅛"	12⅛"
Beam 8	10½"	11½"
Beam 9	12⅜"	11⅜"
Beam 10	12"	10¾"

MODEL: Br_Sheet_Consultant
FILE NAME: E:\2410-1\struct\Final Design\CADD (ORD)\CADD_Sheets\0320086-66M30-031-BearingDetails2.dgn

LIN ENGINEERING,LTD.
Consulting Engineers
Springfield, Illinois

USER NAME = Mike Haley		DESIGNED - CZ		REVISED -
		DRAWN - SJH		REVISED -
PLOT SCALE = $SCALE$		CHECKED - MTH		REVISED -
PLOT DATE = 5/19/2026		CHECK DATE - 10/2025		REVISED -

STATE OF ILLINOIS
DEPARTMENT OF TRANSPORTATION

BEARING DETAILS
STRUCTURE NO. 032-0086
SHEET 31 OF 39 SHEETS

F.A.P. RTE.	SECTION	COUNTY	TOTAL SHEETS	SHEET NO.
326	(111HVB1)ES	GRUNDY	137	82
		CONTRACT NO. 66M30		
	ILLINOIS	FED. AID PROJECT		

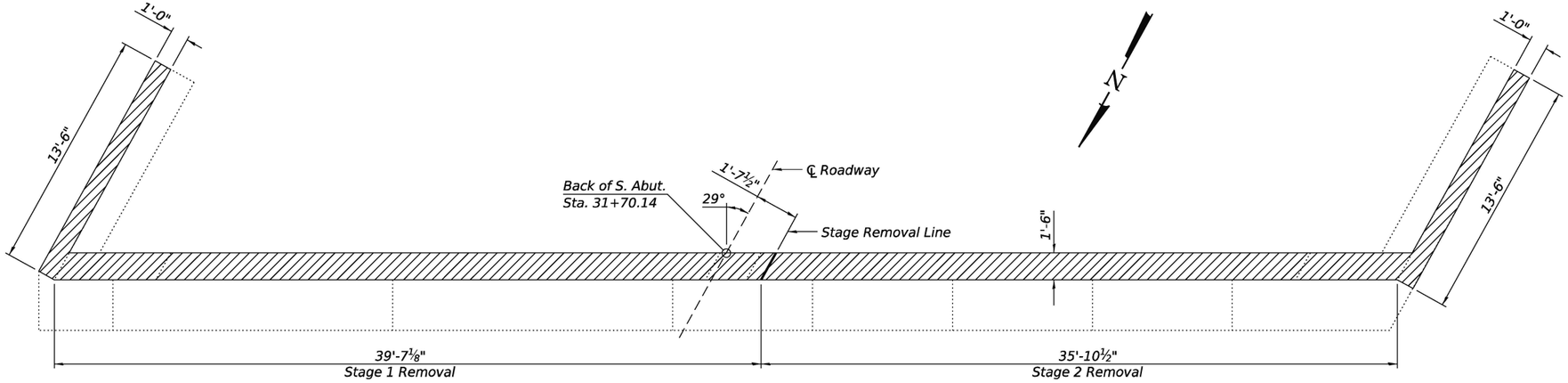

PLAN - SOUTH ABUTMENT

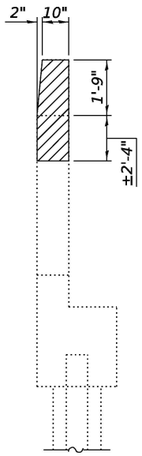

SECTION THRU WINGWALL

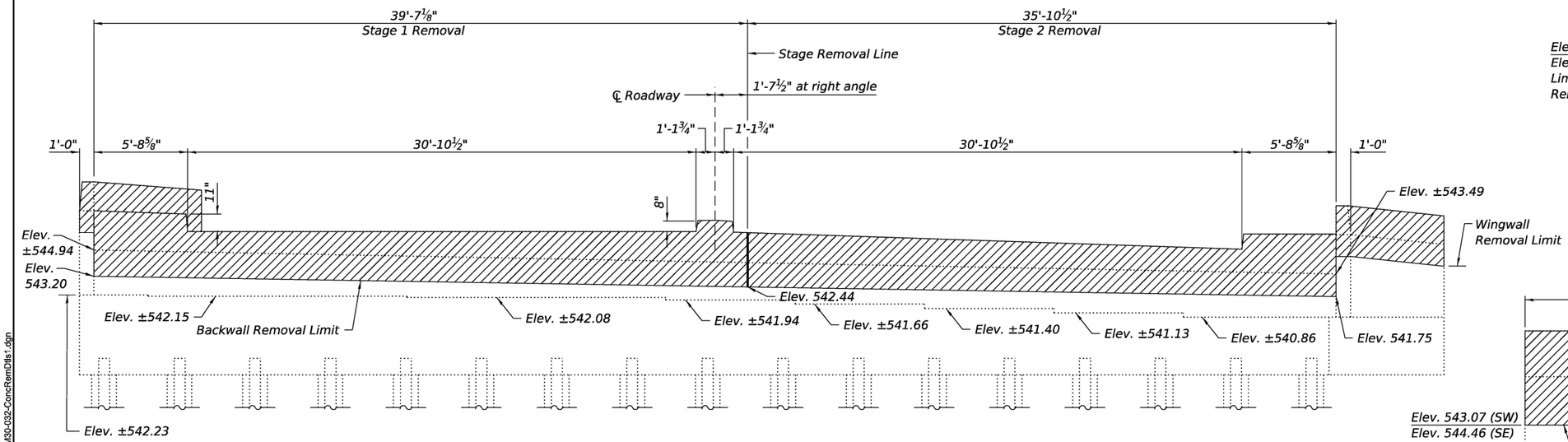

ELEVATION - SOUTH ABUTMENT

(Looking South)

(Dimensions are measured along north face of backwall)

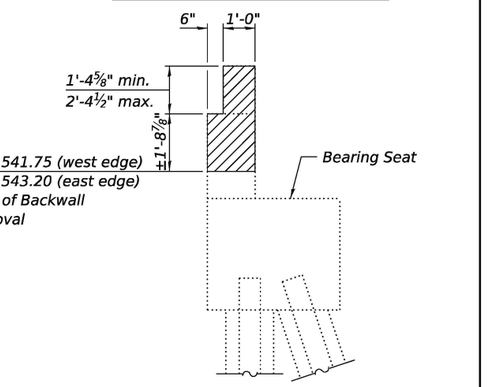

SECTION THRU SOUTH ABUTMENT

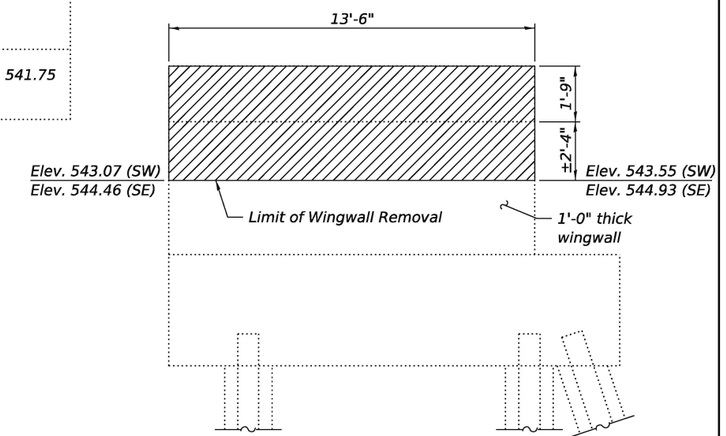

WINGWALL ELEVATION - SOUTH ABUTMENT

BILL OF MATERIAL

Item	Unit	Total
Concrete Removal	Cu. Yd.	16.1

Notes:

Hatched area indicates limits of Concrete Removal.

Seal the cut rebar at top of wingwall and backwall removal limits with epoxy. Cost included with Concrete Removal.

Bearing Seat elevations shown are taken from survey data.

See anchor bolt locations on sheet 31 of 39.

MODEL: Br_Sheet_Consultant
FILE NAME: E:\2410-1\struct\Final Design\CADD (ORD)\CADD_Sheets\0320086-66M30-032-ConcRemDtls1.dgn

LIN ENGINEERING,LTD.
Consulting Engineers
Springfield, Illinois

USER NAME = LIN03-PC	DESIGNED - CZ	REVISED -	
	DRAWN - SJH	REVISED -	
PLOT SCALE = $SCALE$	CHECKED - MTH	REVISED -	
PLOT DATE = 6/19/2026	CHECK DATE - 10/2025	REVISED -	

STATE OF ILLINOIS
DEPARTMENT OF TRANSPORTATION

CONCRETE REMOVAL DETAILS
STRUCTURE NO. 032-0086

SHEET 32 OF 39 SHEETS

F.A.P. RTE.	SECTION	COUNTY	TOTAL SHEETS	SHEET NO.
326	(111HVB1)ES	GRUNDY	137	83
		CONTRACT NO. 66M30		
	ILLINOIS	FED. AID PROJECT		

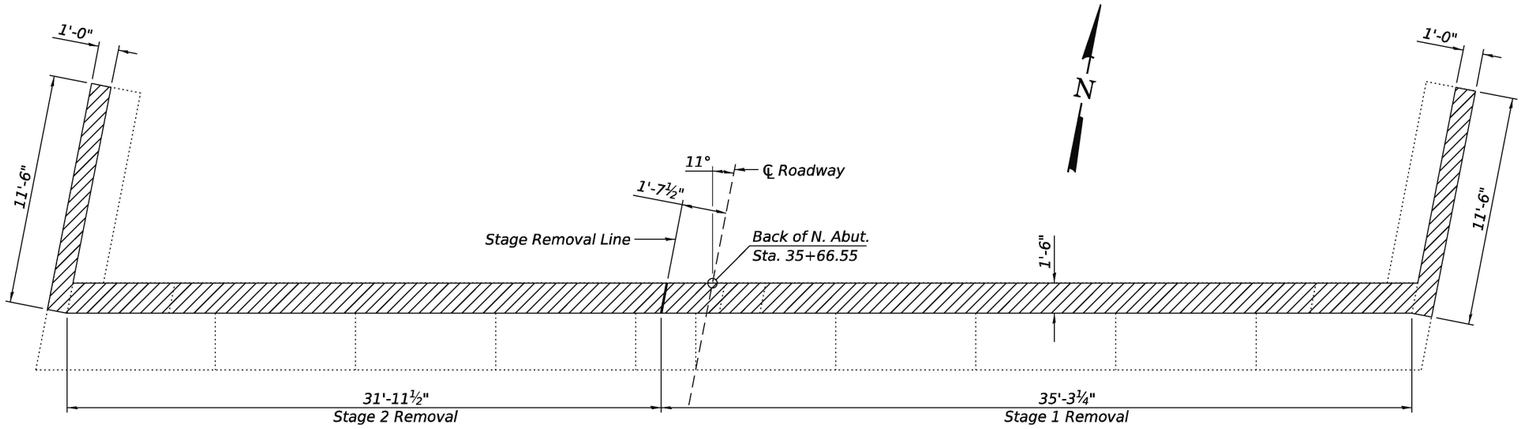

PLAN - NORTH ABUTMENT

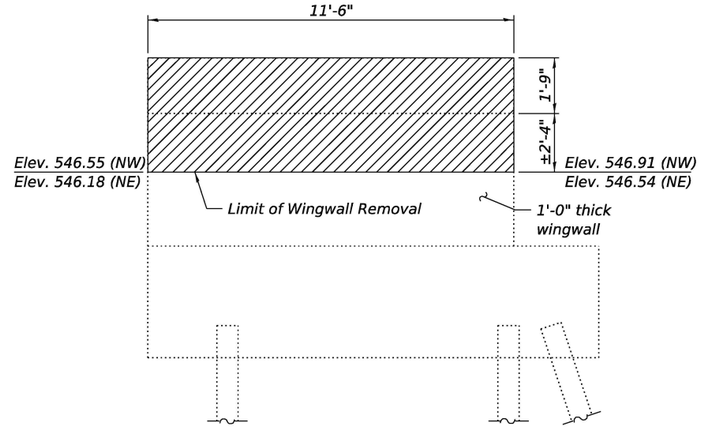

WINGWALL ELEVATION - NORTH ABUTMENT

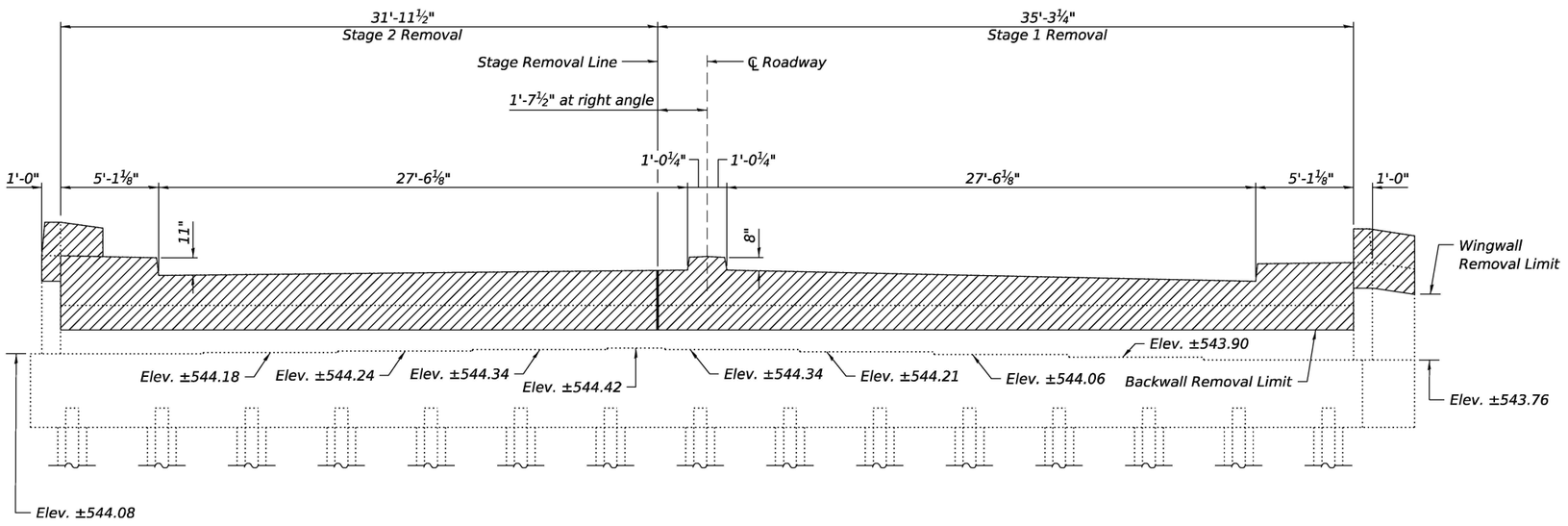

ELEVATION - NORTH ABUTMENT

(Looking North)

(Dimensions are measured along south face of backwall)

BILL OF MATERIAL

Item	Unit	Total
Concrete Removal	Cu. Yd.	14.5

Notes:

Hatched area indicates limits of Concrete Removal.

Seal the cut rebar at top of wingwall and backwall removal limits with epoxy. Cost included with Concrete Removal.

Bearing Seat elevations shown are taken from survey data.

See anchor bolt locations on sheet 31 of 39.

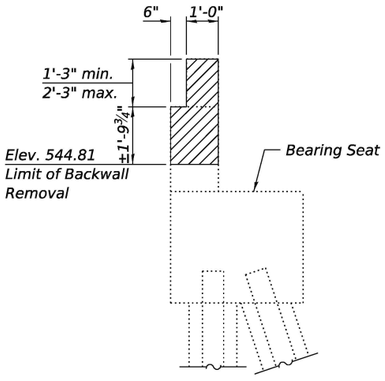

SECTION THRU NORTH ABUTMENT

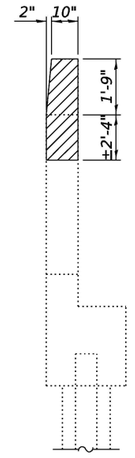

SECTION THRU WINGWALL

(Sheet 2 of 2)

LIN ENGINEERING, LTD.
Consulting Engineers
Springfield, Illinois

USER NAME = LIN03-PC	DESIGNED - CZ	REVISED -	
	DRAWN - SJH	REVISED -	
PLOT SCALE = $SCALE$	CHECKED - MTH	REVISED -	
PLOT DATE = 6/4/2026	CHECK DATE - 10/2025	REVISED -	

STATE OF ILLINOIS
DEPARTMENT OF TRANSPORTATION

CONCRETE REMOVAL DETAILS
STRUCTURE NO. 032-0086
SHEET 33 OF 39 SHEETS

F.A.P. RTE.	SECTION	COUNTY	TOTAL SHEETS	SHEET NO.
326	(111HVB1)ES	GRUNDY	137	84
		CONTRACT NO. 66M30		
	ILLINOIS	FED. AID PROJECT		

MODEL: Br_Sheet_Consultant
FILE NAME: E:\2410-1\struct\Final Design\CADD (ORD)\CADD_Sheets\03220086-66M30-033-ConcRemDtls2.dgn

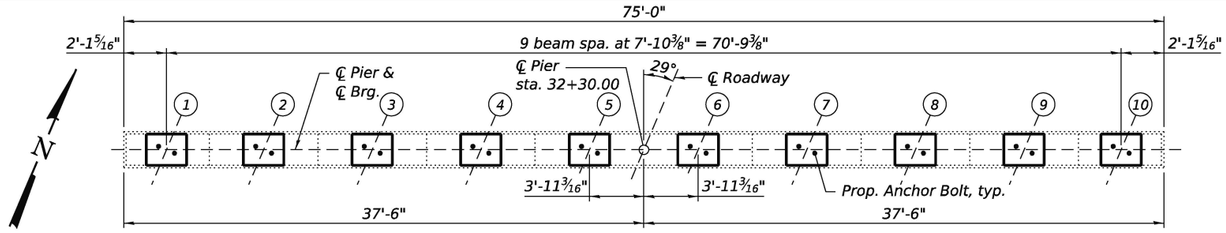

PIER CAP PLAN - PIER 1

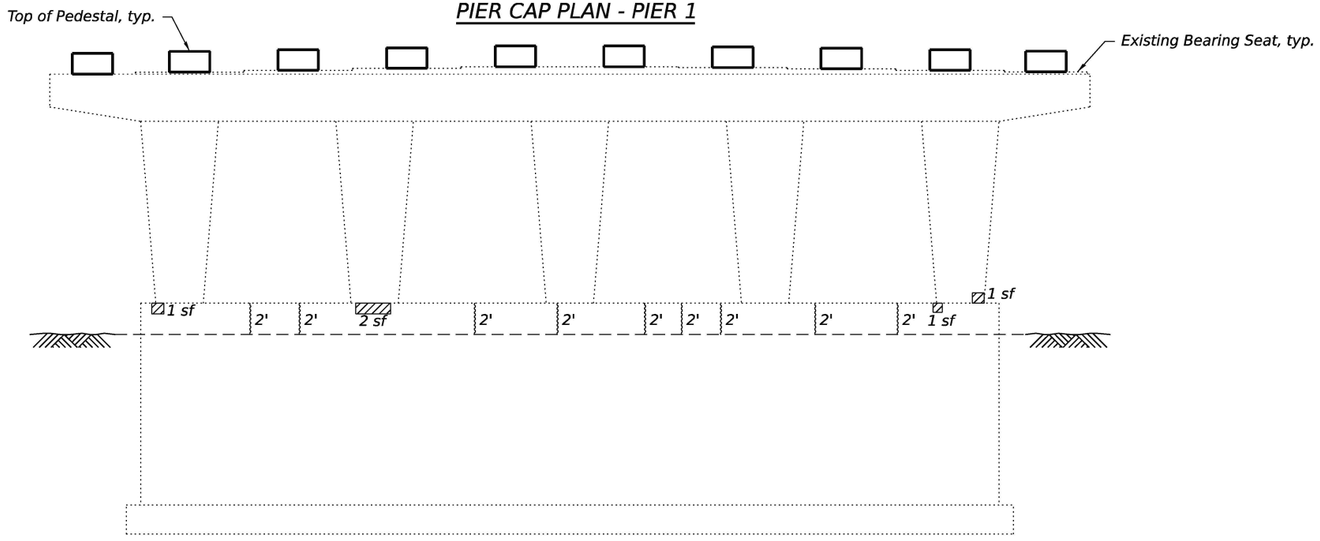

ELEVATION - PIER 1

(Looking North)

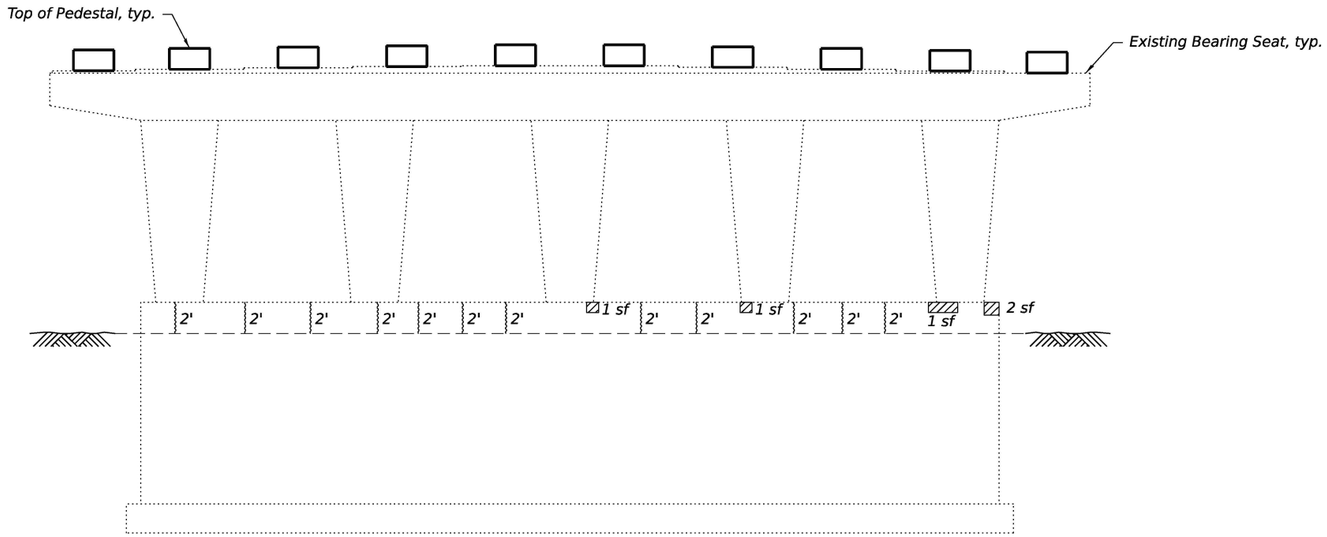

ELEVATION - PIER 1

(Looking South)

ELEVATION TABLE

Location	Prop. Top of Pedestal Elev.	Exist. Brg. Seat Elev.	T
Beam 1	543.96	542.67±	1'-3 3/8"
Beam 2	544.24	542.88±	1'-4 3/8"
Beam 3	544.52	543.13±	1'-4 3/4"
Beam 4	544.80	543.34±	1'-5 1/2"
Beam 5	545.08	543.58±	1'-6"
Beam 6	545.22	543.68±	1'-6 3/8"
Beam 7	545.22	543.68±	1'-6 1/2"
Beam 8	545.20	543.67±	1'-6 3/8"
Beam 9	545.21	543.70±	1'-6 7/8"
Beam 10	545.20	543.68±	1'-6 1/4"

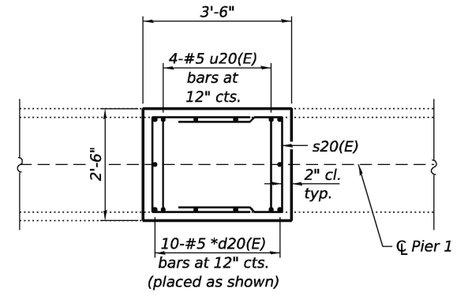

PLAN OF PEDESTAL

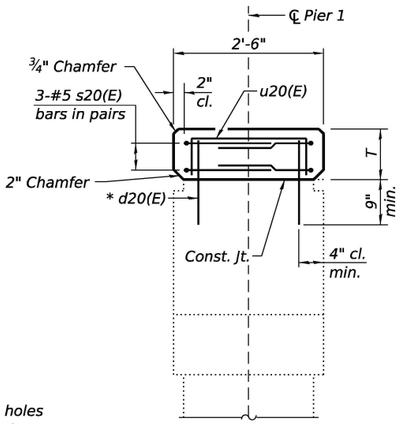

SECTION THRU PIER CAP

* Drill and epoxy grout d20(E) bars in 9" min. deep holes according to Article 584 of the Standard Specifications. Cost included with Reinforcement Bars, Epoxy Coated.

LEGEND

- Structural Repair of Concrete (Depth ≤ Than 5 in.)
- Epoxy Crack Injection
- sf Square Feet

Notes:
Repair of the existing pier shall include but may not be limited to the areas shown. The actual area to be repaired shall be determined by the Engineer at the time of construction.
Prior to ordering any material, the Contractor shall verify in the field all required pedestal height dimensions.
See anchor bolt locations on sheet 31 of 39.

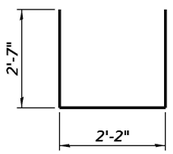

BAR s20(E)

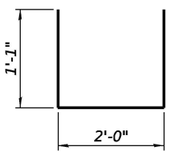

BAR u20(E)

BILL OF MATERIAL

Bar	No.	Size	Length	Shape
d20(E)	100	#5	2'-1"	——
s20(E)	60	#5	7'-4"	⌴
u20(E)	40	#5	4'-2"	⌴
Concrete Structures			Cu. Yd.	4.7
Reinforcement Bars, Epoxy Coated			Pound	860
Structural Repair of Concrete (Depth Equal to or less than 5 in.)			Sq. Ft.	10
Epoxy Crack Injection			Foot	42

MODEL: Br_Sheet_Consultant
FILE NAME: E:\2410-1\struct\Final Design\CADD (ORD)\CADD_Sheets\0320086-66M30-034-PierRepairDtls1.dgn

LIN ENGINEERING, LTD.
Consulting Engineers
Springfield, Illinois

USER NAME = LIN03-PC	DESIGNED - CZ	REVISED -	
	DRAWN - SJH	REVISED -	
PLOT SCALE = $SCALE$	CHECKED - MTH	REVISED -	
PLOT DATE = 6/19/2026	CHECK DATE - 10/2025	REVISED -	

STATE OF ILLINOIS
DEPARTMENT OF TRANSPORTATION

PIER REPAIR DETAILS
STRUCTURE NO. 032-0086
SHEET 34 OF 39 SHEETS

F.A.P. RTE.	SECTION	COUNTY	TOTAL SHEETS	SHEET NO.
326	(111HVB1)ES	GRUNDY	137	85
		CONTRACT NO. 66M30		
	ILLINOIS FED. AID PROJECT			

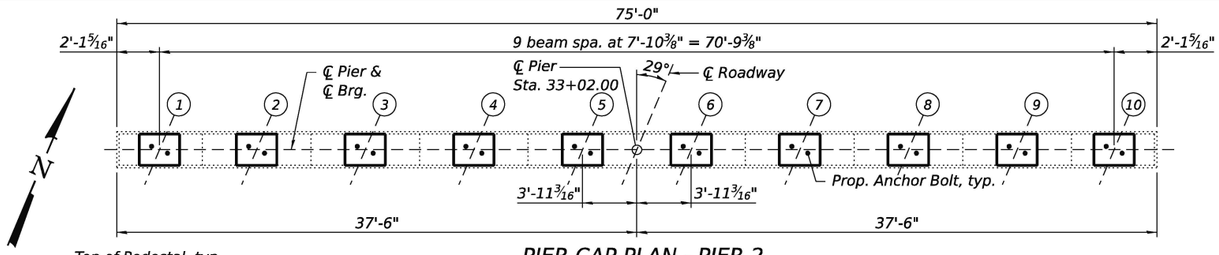

PIER CAP PLAN - PIER 2

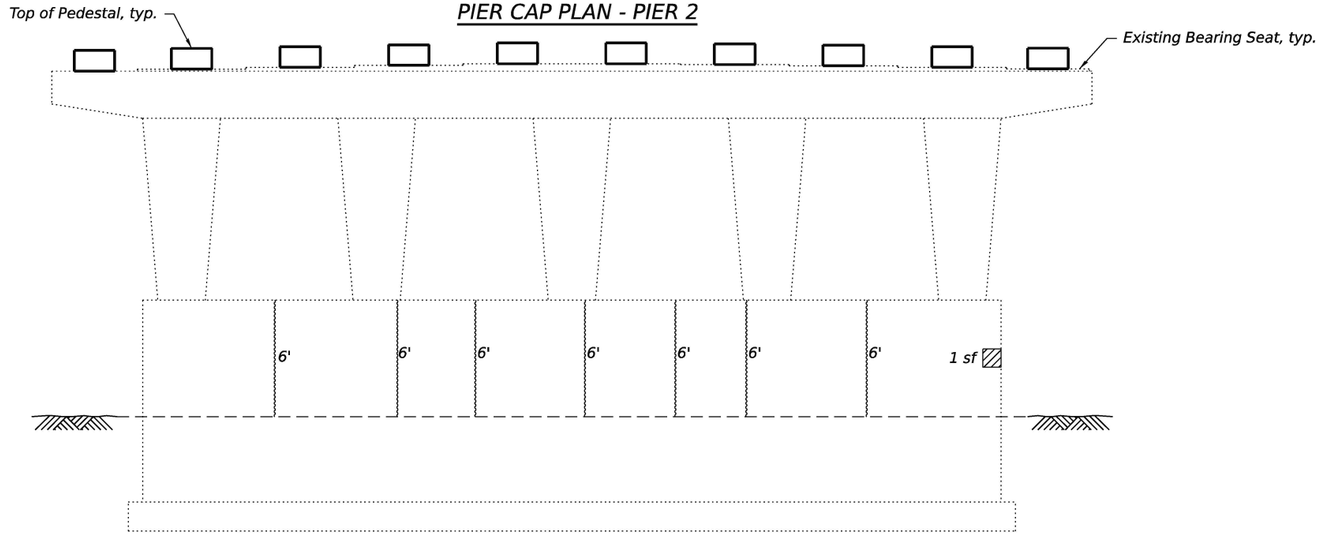

ELEVATION - PIER 2

(Looking North)

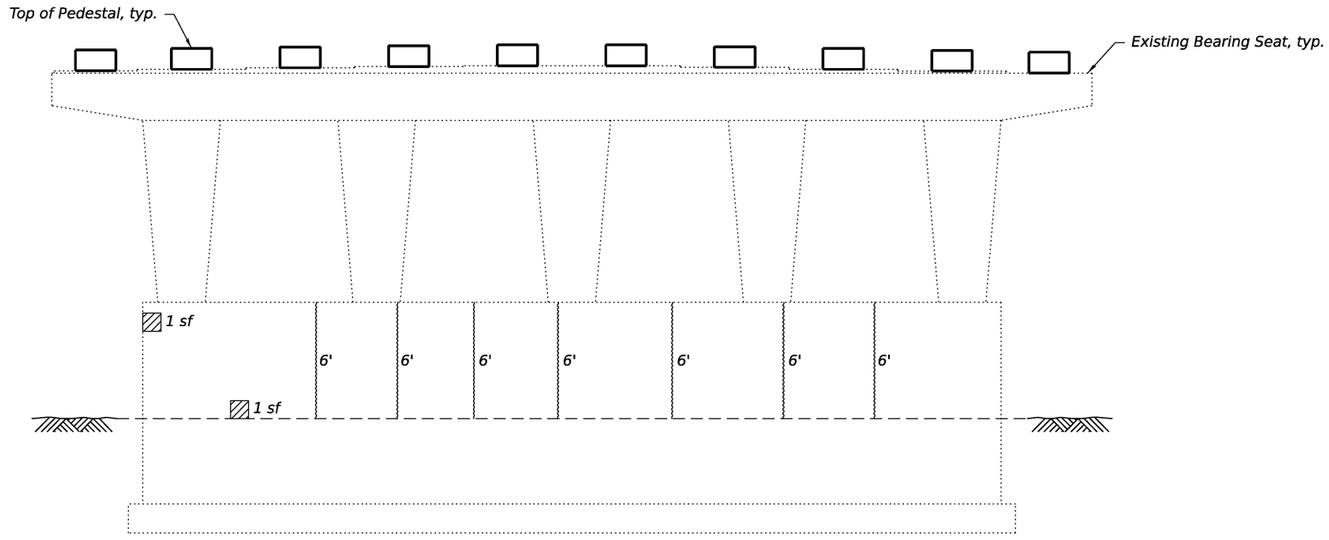

ELEVATION - PIER 2

(Looking South)

ELEVATION TABLE

Location	Prop. Top of Pedestal Elev.	Exist. Brg. Seat Elev.	T
Beam 1	546.25	544.54±	1'-8½"
Beam 2	546.48	544.74±	1'-8¾"
Beam 3	546.70	544.91±	1'-9⅜"
Beam 4	546.92	545.08±	1'-10"
Beam 5	547.14	545.28±	1'-10⅜"
Beam 6	547.22	545.37±	1'-10¼"
Beam 7	547.16	545.27±	1'-10⅝"
Beam 8	547.09	545.28±	1'-9¾"
Beam 9	547.03	545.19±	1'-10"
Beam 10	546.95	545.19±	1'-9⅛"

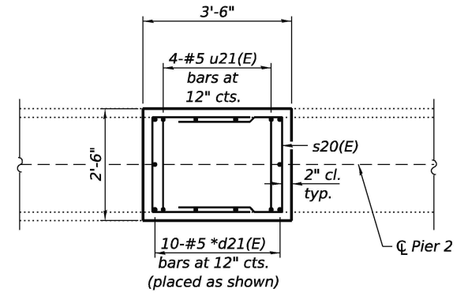

PLAN OF PEDESTAL

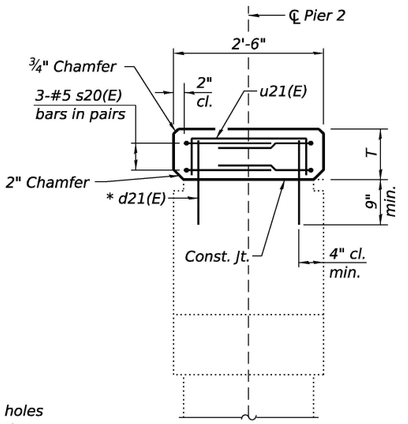

SECTION THRU PIER CAP

* Drill and epoxy grout d21(E) bars in 9" min. deep holes according to Article 584 of the Standard Specifications. Cost included with Reinforcement Bars, Epoxy Coated.

LEGEND

- Structural Repair of Concrete (Depth ≤ Than 5 in.)
- Epoxy Crack Injection
- sf Square Feet

Notes:

Repair of the existing pier shall include but may not be limited to the areas shown. The actual area to be repaired shall be determined by the Engineer at the time of construction.

Prior to ordering any material, the Contractor shall verify in the field all required pedestal height dimensions.

See anchor bolt locations on sheet 31 of 39.

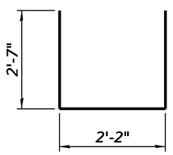

BAR s20(E)

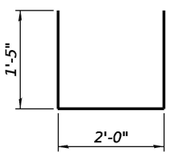

BAR u21(E)

BILL OF MATERIAL

Bar	No.	Size	Length	Shape
d21(E)	100	#5	2'-6"	——
s20(E)	60	#5	7'-4"	⌴
u21(E)	40	#5	4'-10"	⌴
Concrete Structures			Cu. Yd.	5.8
Reinforcement Bars, Epoxy Coated			Pound	930
Structural Repair of Concrete (Depth Equal to or less than 5 in.)			Sq. Ft.	3
Epoxy Crack Injection			Foot	84

MODEL: Br_Sheet_Consultant
FILE NAME: E:\2410-1\struct\Final Design\CADD (ORD)\CADD_Sheets\0320086-66M30-035-PierRepairDtls2.dgn

LIN ENGINEERING, LTD.
Consulting Engineers
Springfield, Illinois

USER NAME = LIN03-PC	DESIGNED - CZ	REVISED -	
	DRAWN - SJH	REVISED -	
PLOT SCALE = $SCALE$	CHECKED - MTH	REVISED -	
PLOT DATE = 6/19/2026	CHECK DATE - 10/2025	REVISED -	

STATE OF ILLINOIS
DEPARTMENT OF TRANSPORTATION

PIER REPAIR DETAILS
STRUCTURE NO. 032-0086
SHEET 35 OF 39 SHEETS

F.A.P. RTE.	SECTION	COUNTY	TOTAL SHEETS	SHEET NO.
326	(111HVB1)ES	GRUNDY	137	86
		CONTRACT NO. 66M30		
	ILLINOIS FED. AID PROJECT			

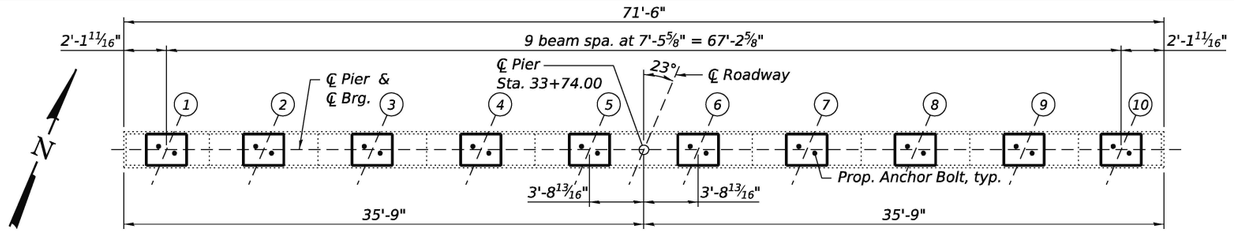

PIER CAP PLAN - PIER 3

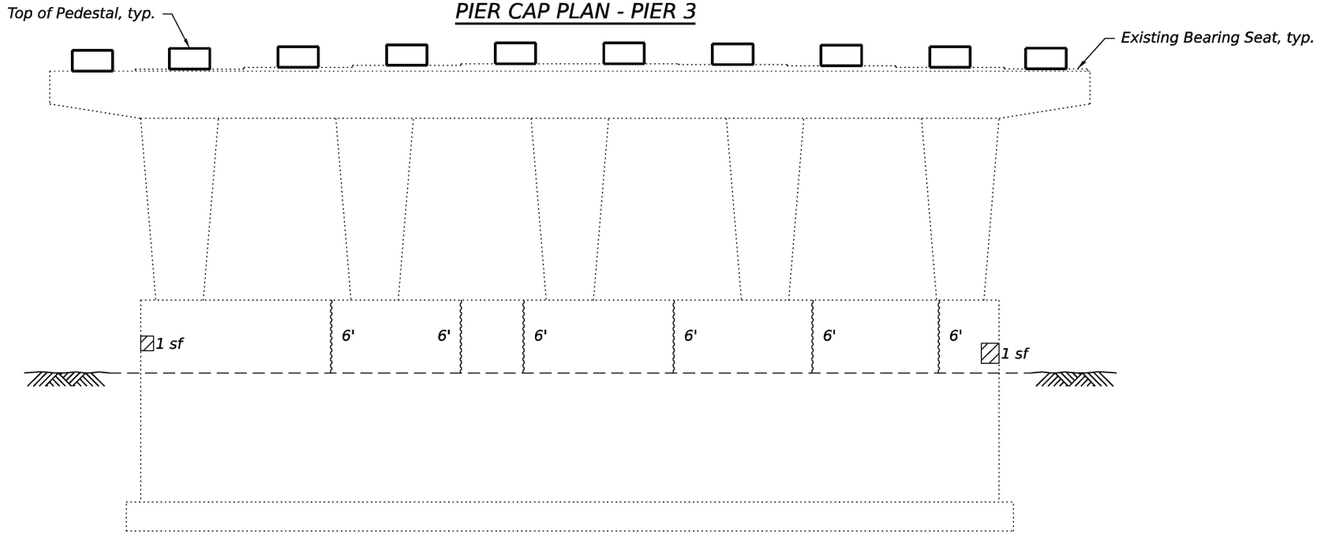

ELEVATION - PIER 3

(Looking North)

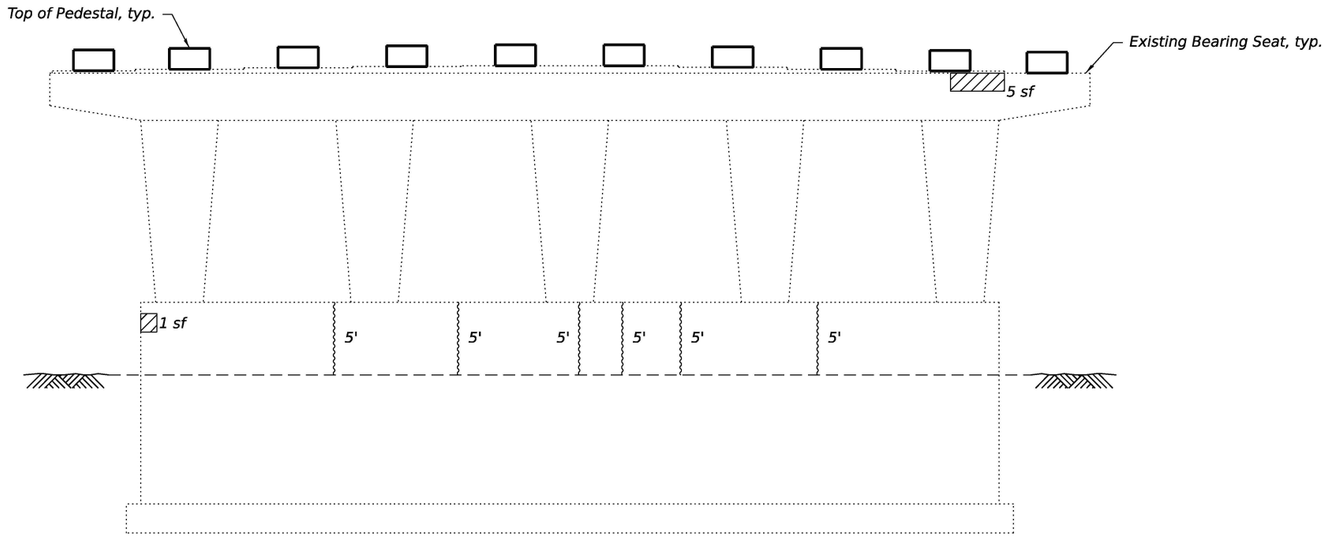

ELEVATION - PIER 3

(Looking South)

ELEVATION TABLE

Location	Prop. Top of Pedestal Elev.	Exist. Brg. Seat Elev.	T
Beam 1	547.68	545.58±	2'-1 1/4"
Beam 2	547.83	545.73±	2'-1 1/4"
Beam 3	547.99	545.85±	2'-1 5/8"
Beam 4	548.14	546.00±	2'-1 3/4"
Beam 5	548.31	546.12±	2'-2 1/8"
Beam 6	548.32	546.11±	2'-2 1/2"
Beam 7	548.19	546.05±	2'-1 5/8"
Beam 8	548.07	545.97±	2'-1 1/4"
Beam 9	547.94	545.88±	2'-0 3/4"
Beam 10	547.82	545.77±	2'-0 5/8"

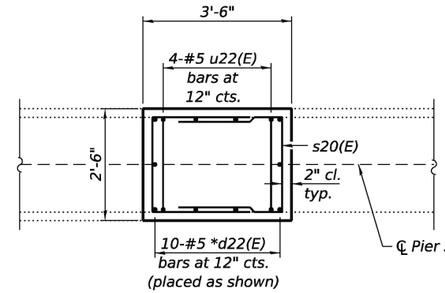

PLAN OF PEDESTAL

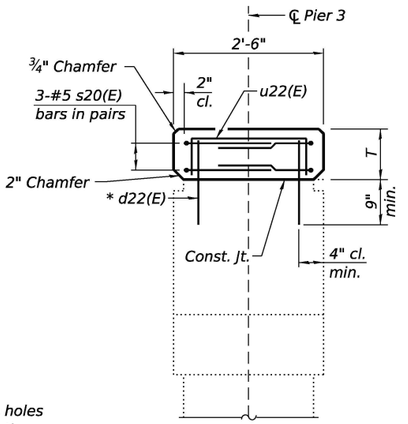

SECTION THRU PIER CAP

* Drill and epoxy grout d22(E) bars in 9" min. deep holes according to Article 584 of the Standard Specifications. Cost included with Reinforcement Bars, Epoxy Coated.

LEGEND

- Structural Repair of Concrete (Depth ≤ Than 5 in.)
- Epoxy Crack Injection
- sf Square Feet

Notes:

Repair of the existing pier shall include but may not be limited to the areas shown. The actual area to be repaired shall be determined by the Engineer at the time of construction.

Prior to ordering any material, the Contractor shall verify in the field all required pedestal height dimensions.

See anchor bolt locations on sheet 31 of 39.

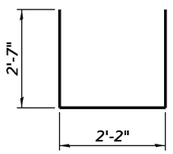

BAR s20(E)

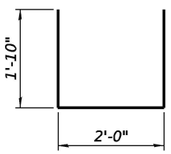

BAR u22(E)

BILL OF MATERIAL

Bar	No.	Size	Length	Shape
d22(E)	100	#5	2'-9"	——
s20(E)	60	#5	7'-4"	⌴
u22(E)	40	#5	5'-8"	⌴
Concrete Structures			Cu. Yd.	7.0
Reinforcement Bars, Epoxy Coated			Pound	990
Structural Repair of Concrete (Depth Equal to or less than 5 in.)			Sq. Ft.	8
Epoxy Crack Injection			Foot	66

MODEL: Br_Sheet_Consultant
FILE NAME: E:\2410-1\struct\Final Design\CADD (ORD)\CADD_Sheets\0320086-66M30-036-PierRepairDtls3.dgn

LIN ENGINEERING, LTD.
Consulting Engineers
Springfield, Illinois

USER NAME = LIN03-PC	DESIGNED - CZ	REVISED -	
	DRAWN - SJH	REVISED -	
PLOT SCALE = $SCALE$	CHECKED - MTH	REVISED -	
PLOT DATE = 6/4/2026	CHECK DATE - 10/2025	REVISED -	

STATE OF ILLINOIS
DEPARTMENT OF TRANSPORTATION

PIER REPAIR DETAILS
STRUCTURE NO. 032-0086
SHEET 36 OF 39 SHEETS

F.A.P. RTE.	SECTION	COUNTY	TOTAL SHEETS	SHEET NO.
326	(111HVB1)ES	GRUNDY	137	87
		CONTRACT NO. 66M30		
	ILLINOIS FED. AID PROJECT			

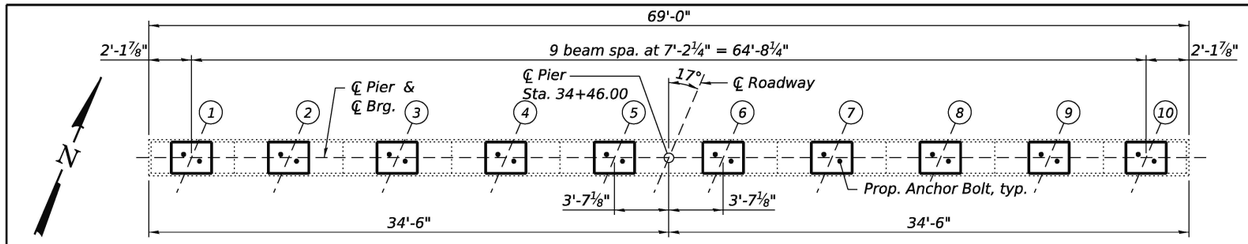

PIER CAP PLAN - PIER 4

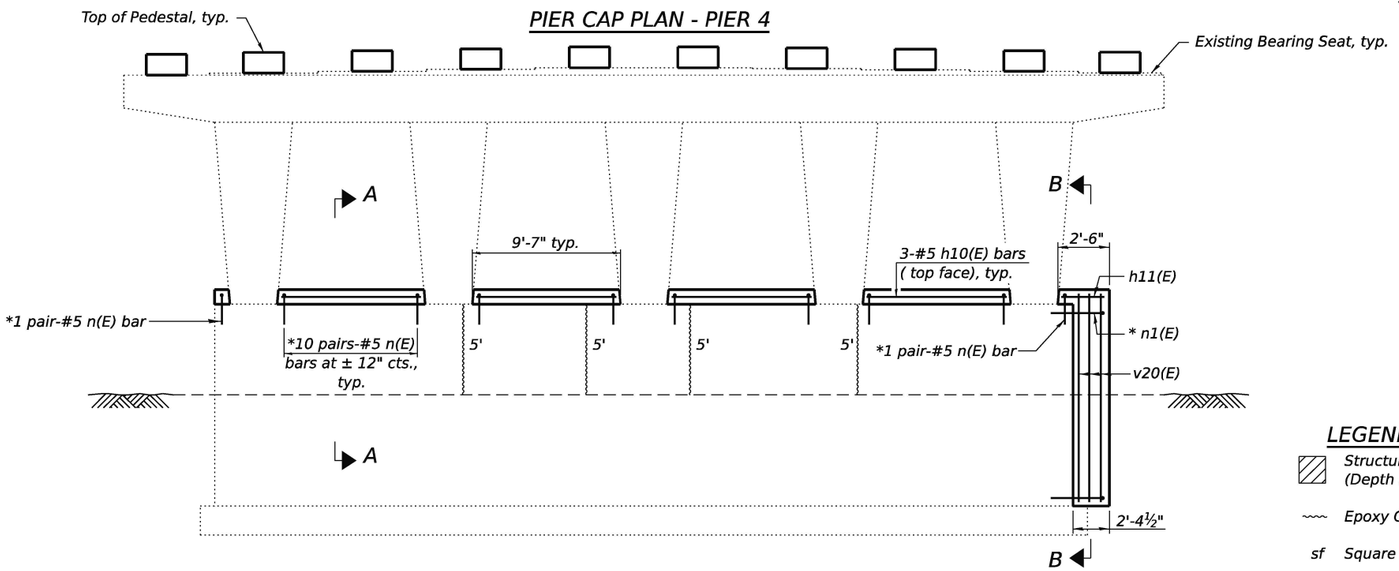

ELEVATION - PIER 4

(Looking North)

* Epoxy grout n(E) and n1(E) bars in 9" min. deep holes according to Article 584 of the Standard Specifications. Cost included with Reinforcement Bars, Epoxy Coated.

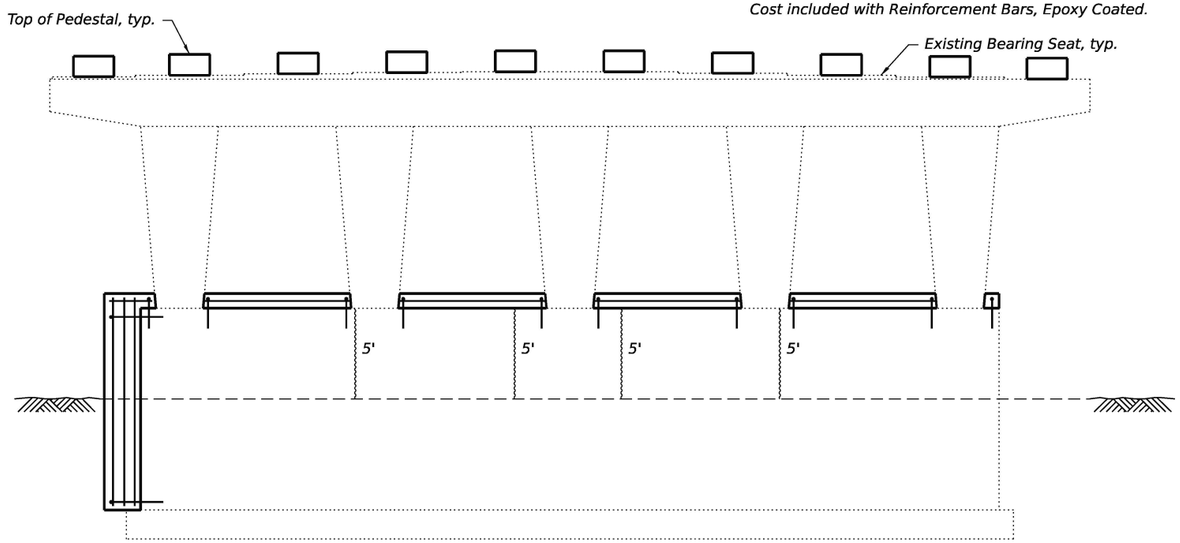

ELEVATION - PIER 4

(Looking South)

Notes:
Repair of the existing pier shall include but may not be limited to the areas shown. The actual area to be repaired shall be determined by the Engineer at the time of construction.
Prior to ordering any material, the Contractor shall verify in the field all required pedestal height dimensions.
Cost of epoxy grouting bars shall be included with Reinforcement Bars, Epoxy Coated.
See anchor bolt locations on sheet 31 of 39.

ELEVATION TABLE

Location	Prop. Top of Pedestal Elev.	Exist. Brg. Seat Elev.	T
Beam 1	547.48	545.70±	1'-9½"
Beam 2	547.60	545.79±	1'-9⅜"
Beam 3	547.71	545.88±	1'-10"
Beam 4	547.82	545.98±	1'-10⅛"
Beam 5	547.95	546.07±	1'-10½"
Beam 6	547.93	546.08±	1'-10¼"
Beam 7	547.77	545.96±	1'-9⅝"
Beam 8	547.61	545.83±	1'-9⅜"
Beam 9	547.45	545.71±	1'-8⅞"
Beam 10	547.29	545.57±	1'-8⅝"

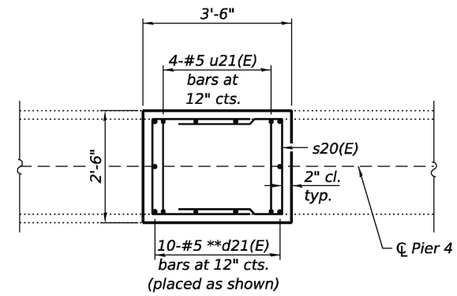

PLAN OF PEDESTAL

** Drill and epoxy grout d21(E) bars in 9" min. deep holes according to Article 584 of the Standard Specifications. Cost included with Reinforcement Bars, Epoxy Coated.

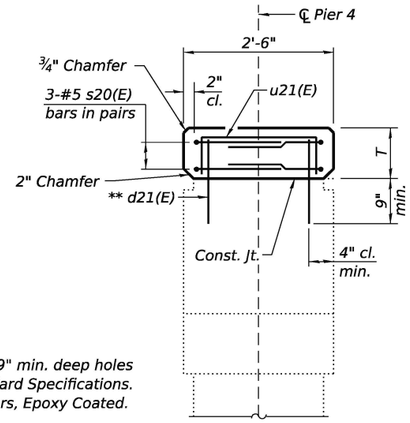

SECTION THRU PIER CAP

LEGEND

- Structural Repair of Concrete (Depth ≤ Than 5 in.)
- Epoxy Crack Injection
- sf Square Feet

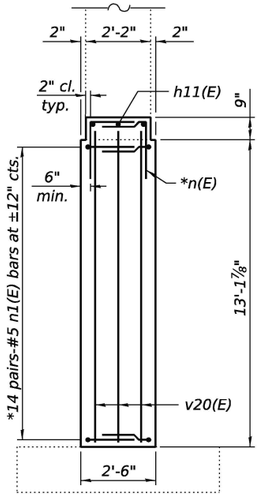

SECTION B-B

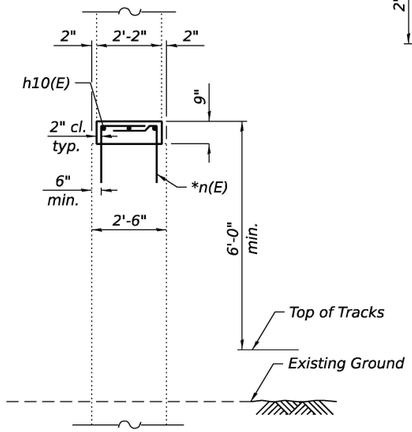

SECTION A-A

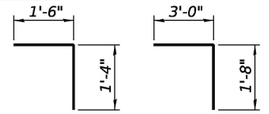

BAR n(E) BAR n1(E)

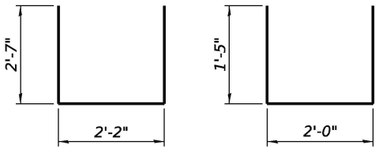

BAR s20(E) BAR u21(E)

BILL OF MATERIAL

Bar	No.	Size	Length	Shape
d21(E)	100	#5	2'-6"	———
s20(E)	60	#5	7'-4"	⌴
u21(E)	40	#5	4'-10"	⌴
v20(E)	9	#5	13'-7"	———
n(E)	84	#5	2'-10"	⌞
n1(E)	28	#5	4'-8"	⌞
h10(E)	12	#5	9'-3"	———
h11(E)	3	#5	2'-2"	———
Concrete Structures			Cu. Yd.	11.1
Reinforcement Bars, Epoxy Coated			Pound	1,560
Epoxy Crack Injection			Foot	40

MODEL: Br_Sheet_Consultant
FILE NAME: E:\2410-1\struct\Final Design\CADD (ORD)\CADD_Sheets\0320086-66M30-037-PierRepairDtls4.dgn

LIN ENGINEERING, LTD.
Consulting Engineers
Springfield, Illinois

USER NAME = LIN03-PC	DESIGNED - CZ	REVISED -	
	DRAWN - SJH	REVISED -	
PLOT SCALE = $SCALE$	CHECKED - MTH	REVISED -	
PLOT DATE = 6/4/2026	CHECK DATE - 10/2025	REVISED -	

STATE OF ILLINOIS
DEPARTMENT OF TRANSPORTATION

PIER REPAIR DETAILS
STRUCTURE NO. 032-0086
SHEET 37 OF 39 SHEETS

F.A.P. RTE.	SECTION	COUNTY	TOTAL SHEETS	SHEET NO.
326	(111HVB1)ES	GRUNDY	137	88
		CONTRACT NO. 66M30		
	ILLINOIS	FED. AID PROJECT		

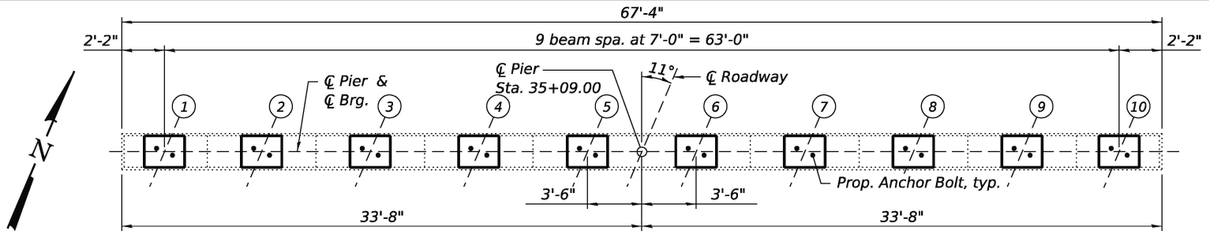

PIER CAP PLAN - PIER 5

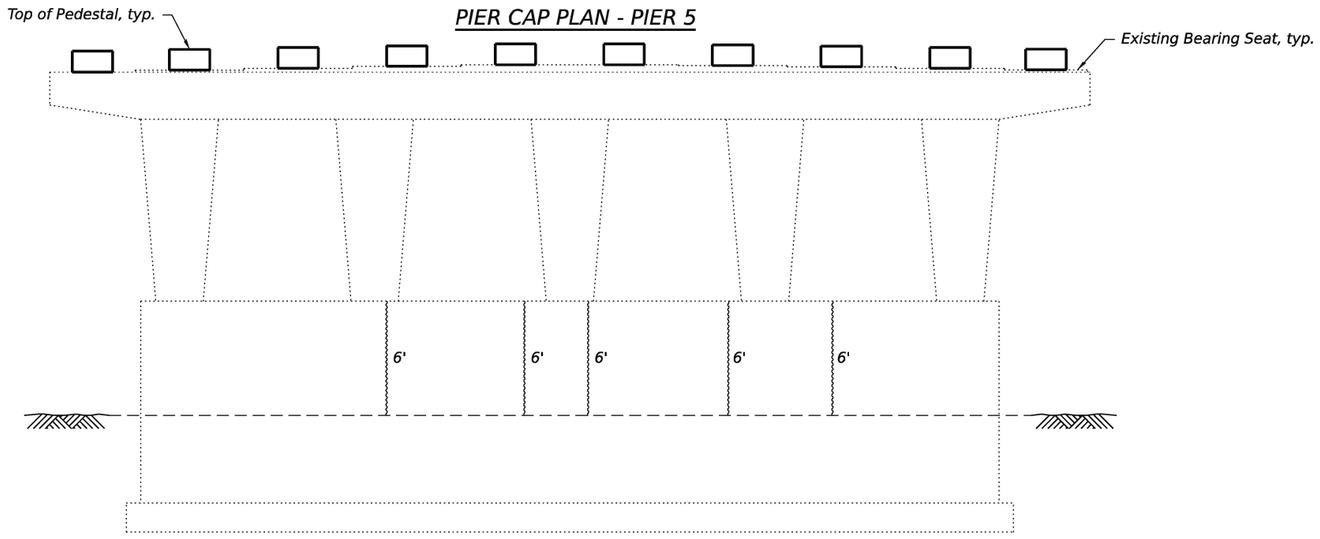

ELEVATION - PIER 5
(Looking North)

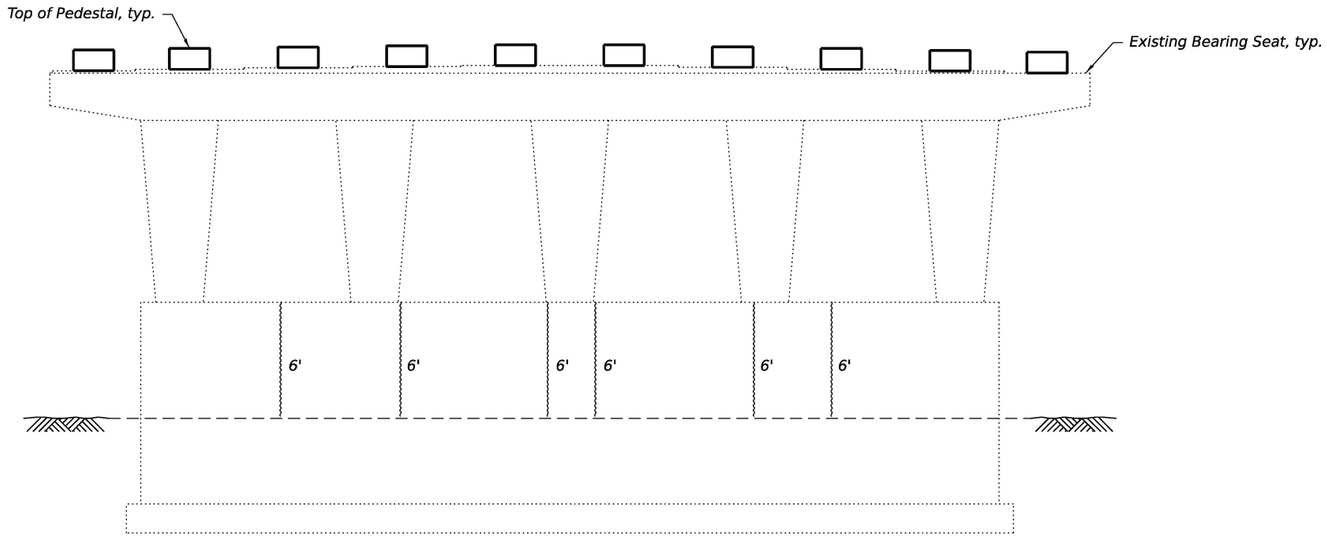

ELEVATION - PIER 5
(Looking South)

ELEVATION TABLE

Location	Prop. Top of Pedestal Elev.	Exist. Brg. Seat Elev.	T
Beam 1	546.43	544.96±	1'-5⅝"
Beam 2	546.54	545.04±	1'-6"
Beam 3	546.65	545.11±	1'-6⅜"
Beam 4	546.75	545.20±	1'-6⅝"
Beam 5	546.86	545.29±	1'-6¾"
Beam 6	546.82	545.24±	1'-7"
Beam 7	546.65	545.14±	1'-6⅛"
Beam 8	546.48	545.00±	1'-5⅝"
Beam 9	546.31	544.87±	1'-5⅜"
Beam 10	546.14	544.73±	1'-4⅞"

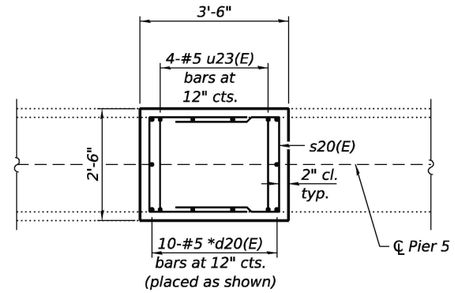

PLAN OF PEDESTAL

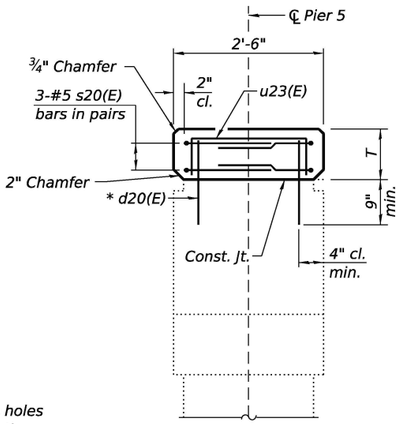

SECTION THRU PIER CAP

* Drill and epoxy grout d20(E) bars in 9" min. deep holes according to Article 584 of the Standard Specifications. Cost included with Reinforcement Bars, Epoxy Coated.

LEGEND

Epoxy Crack Injection

Notes:
Repair of the existing pier shall include but may not be limited to the areas shown. The actual area to be repaired shall be determined by the Engineer at the time of construction.
Prior to ordering any material, the Contractor shall verify in the field all required pedestal height dimensions.
See anchor bolt locations on sheet 31 of 39.

BILL OF MATERIAL

Bar	No.	Size	Length	Shape
d20(E)	100	#5	2'-1"	——
s20(E)	60	#5	7'-4"	⌴
u23(E)	40	#5	4'-6"	⌴
Concrete Structures			Cu. Yd.	4.8
Reinforcement Bars, Epoxy Coated			Pound	870
Epoxy Crack Injection			Foot	66

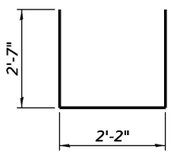

BAR s20(E)

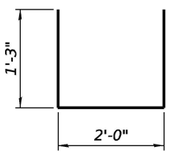

BAR u23(E)

MODEL: Br_Sheet_Consultant
FILE NAME: E:\2410-1\struct\Final Design\CADD (ORD)\CADD_Sheets\0320086-66M30-038-PierRepairDtls5.dgn

LIN ENGINEERING, LTD.
Consulting Engineers
Springfield, Illinois

USER NAME = Mike Haley	DESIGNED - CZ	REVISED -	
	DRAWN - SJH	REVISED -	
PLOT SCALE = $SCALE$	CHECKED - MTH	REVISED -	
PLOT DATE = 5/19/2026	CHECK DATE - 10/2025	REVISED -	

STATE OF ILLINOIS
DEPARTMENT OF TRANSPORTATION

PIER REPAIR DETAILS
STRUCTURE NO. 032-0086
SHEET 38 OF 39 SHEETS

F.A.P. RTE.	SECTION	COUNTY	TOTAL SHEETS	SHEET NO.
326	(111HVB1)ES	GRUNDY	137	89
		CONTRACT NO. 66M30		
	ILLINOIS	FED. AID PROJECT		

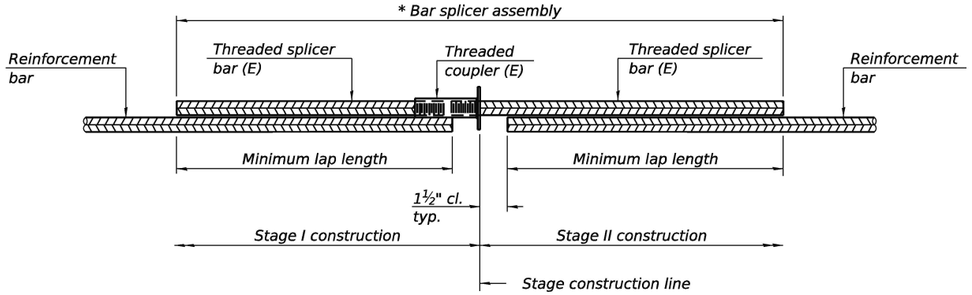

STANDARD BAR SPLICER ASSEMBLY PLAN

Only bar splicer assemblies as presented on the approved QPL list may be used.

Threaded splicer bar length = min. lap length + 1½" + thread length

* Epoxy not required on Bar Splicer Assembly components used in conjunction with black bars.

Location	Bar size	No. assemblies required	Minimum lap length
Deck Slab	#5	1,258	3'-10"
Concrete Diaphragm	#6	14	3'-6"
Concrete Diaphragm	#4	4	1'-7"
Approach Slab	#4	21	1'-7"
Approach Slab	#5	36	2'-1"
Approach Footing	#5	80	2'-1"

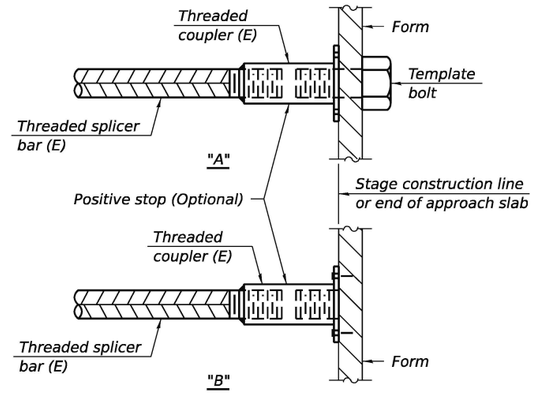

INSTALLATION AND SETTING METHODS

"A" : Set bar splicer assembly by means of a template bolt.
"B" : Set bar splicer assembly by nailing to wood forms or cementing to steel forms.
(E) : Indicates epoxy coating.

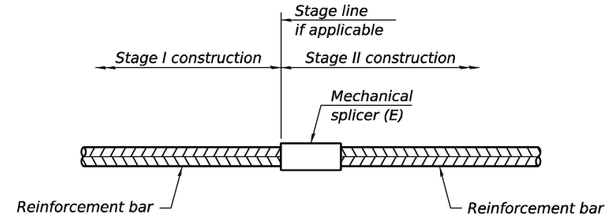

STANDARD MECHANICAL SPLICER

Location	Bar size	No. assemblies required

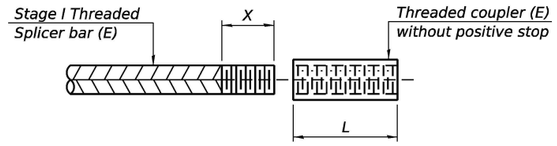

THREADING OF ASSEMBLIES

The threaded length "X" shall be no more than L/2. The bar should be tightened until 0-1 thread(s) is/are exposed.

Notes:
Splicer bars shall be deformed with threaded ends and have a minimum 60 ksi yield strength.
All reinforcement shall be lapped and tied to the splicer bars.
Bar splicer assemblies shall be epoxy coated according to the requirements for reinforcement bars. See Section 508 of the Standard Specifications.
See approved list of bar splicer assemblies and mechanical splicers for alternatives.

BSD-1 4-4-2025

LIN ENGINEERING,LTD. Consulting Engineers Springfield, Illinois

USER NAME = LIN03-PC	DESIGNED - CZ	REVISED -	STATE OF ILLINOIS DEPARTMENT OF TRANSPORTATION	BAR SPLICER ASSEMBLY AND MECHANICAL SPLICER DETAILS STRUCTURE NO. 032-0086
	DRAWN - SJH	REVISED -		
PLOT SCALE = $SCALE$	CHECKED - MTH	REVISED -		SHEET 39 OF 39 SHEETS
PLOT DATE = 6/19/2026	CHECK DATE - 10/2025	REVISED -		

F.A.P. RTE.	SECTION	COUNTY	TOTAL SHEETS	SHEET NO.
326	(111HVB1)ES	GRUNDY	137	90
		CONTRACT NO. 66M30		
	ILLINOIS	FED. AID PROJECT		

MODEL: Br_Sheet_Consultant
FILE NAME: E:\241C-1\struct\Final Design\CADD (ORD)\CADD_Sheets\0320086-66M30-039-BarSplicerDtls.dgn

Benchmark:
BM10: Chiseled "square" on N.E. wingwall of SN 032-0087, ±Sta. 39+66.42, ±33.65 Rt., Elev. 536.36.
BM11: R.R. spike at Utility Pole, S. side of Buchanan St. at house No. 211, ±Sta. 7+97.40, ±20.17 Rt., Elev. 516.663.

Existing Structure:
SN 032-0087 was originally built in 1978 to carry FA-100, IL-47 in Section (111 HB) over Buchanan Street. The superstructure consists of a 7½" normal crowned reinforced concrete slab supported on three continuous spans of W27x84 wide flange steel beams. Substructure elements consist of concrete pile cap stub abutments and four column piers on concrete footings. Bridge measures 121'-6" bk.-to-bk. of abutments and 68'-0" wide o.-to-o. Existing protective timber shielding is in place under the deteriorating soffit area of span 2. IL Rte. 47 traffic to be maintained utilizing staged construction. Buchanan Street will be closed during construction.

No salvage of the existing superstructure.

SCOPE OF WORK

1. *Remove and replace the existing superstructure and approach slabs.*
2. *Make new deck composite full length.*
3. *Reconfigure existing abutments and wingwall to semi-integral configuration.*
4. *Remove parapets (end posts) on wing walls of existing abutments.*
5. *Replace bearings utilizing steel extensions.*
6. *Repair substructures and slopewalls.*

LOADING HL-93

Allow 25#/sq. ft. for future wearing surface.

DESIGN SPECIFICATIONS

2024 AASHTO LRFD Bridge Design Specifications, 10th Edition
2006 Seismic Retrofitting Manual for Highway Structures: Part 1 - Bridges (FHWA-HRT-06-032)

SEISMIC DATA

Seismic Retrofit Category (SRC) = A
Design Spectral Acceleration at 1.0 sec (SD1) = 0.096g
Design Spectral Acceleration at 0.2 sec (SDS) = 0.176g
Soil Site Class = D
Performance Level = 1

DESIGN STRESSES

FIELD UNITS
NEW CONSTRUCTION

f'c = 3,500 psi
f'c = 4,000 psi (Superstructure Concrete)
fy = 60,000 psi (Reinforcement)
fy = 50,000 psi (M270 Grade 50)
Allowable Live Load Deflection = L/1000(Composite)

EXISTING CONSTRUCTION

f'c = 3,500 psi
fy = 40,000 psi (Reinforcement)

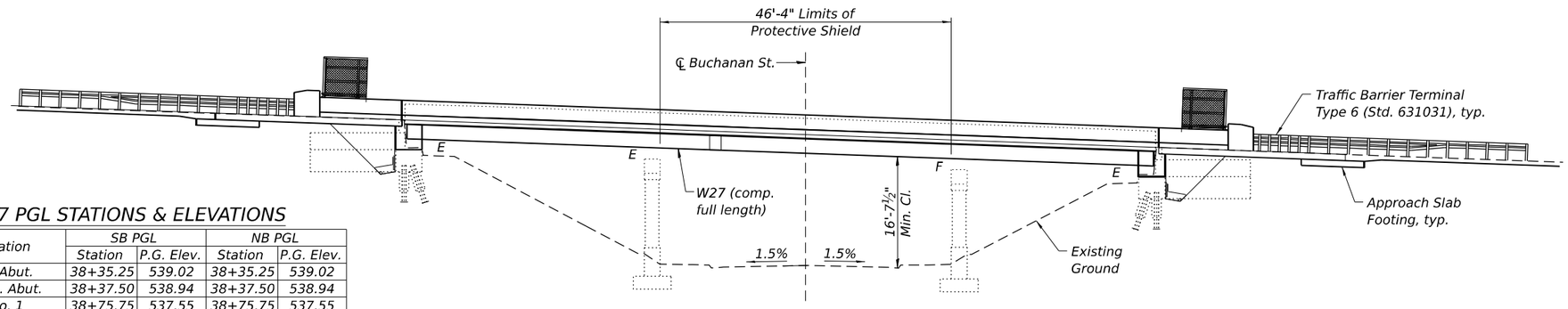

ELEVATION

IL-47 PGL STATIONS & ELEVATIONS

Location	SB PGL		NB PGL	
	Station	P.G. Elev.	Station	P.G. Elev.
Back S. Abut.	38+35.25	539.02	38+35.25	539.02
℄ Brg. S. Abut.	38+37.50	538.94	38+37.50	538.94
℄ Pier No. 1	38+75.75	537.55	38+75.75	537.55
℄ Buchanan St.	39+00.00	536.66	39+00.00	536.66
℄ Pier No. 2	39+24.25	535.77	39+24.25	535.77
℄ Brg. N. Abut.	39+54.50	534.67	39+54.50	534.67
Back N. Abut.	39+56.75	534.59	39+56.75	534.59

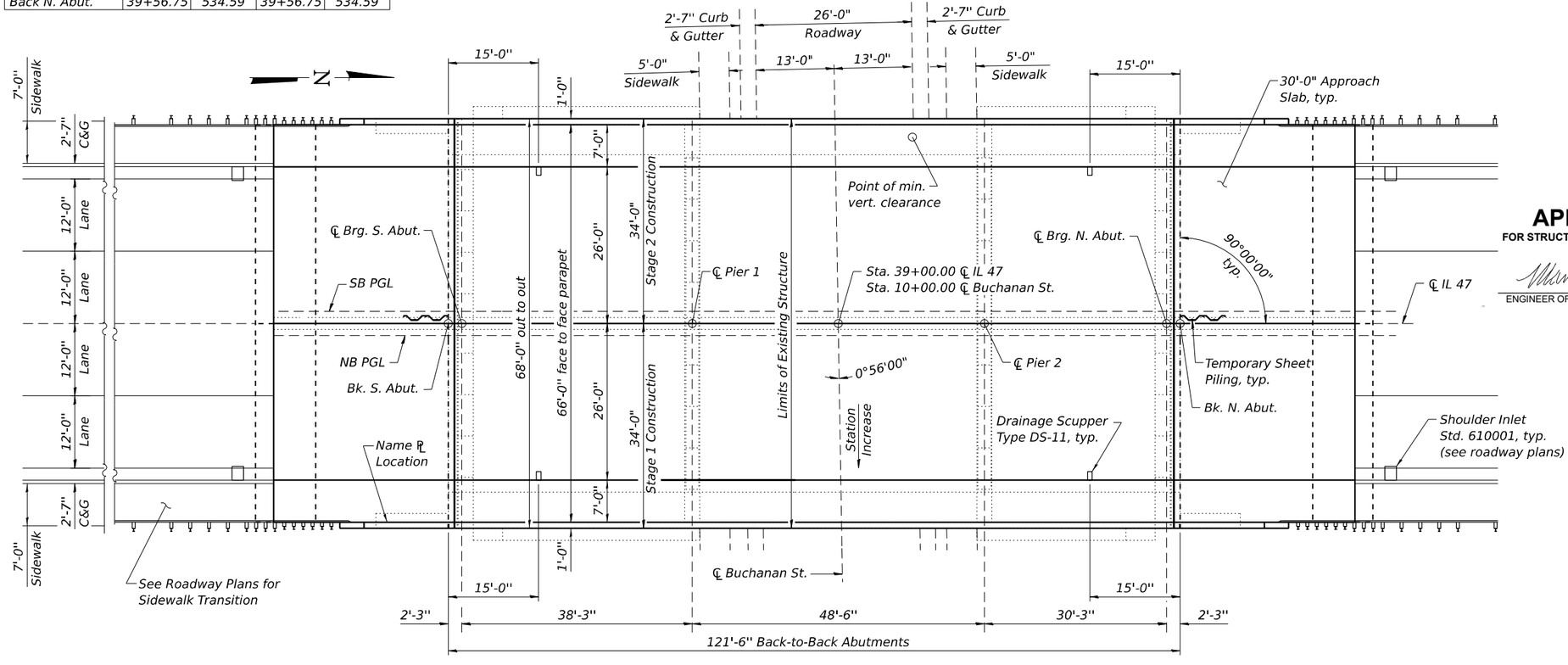

PLAN

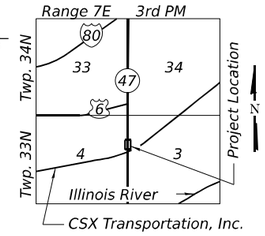

LOCATION SKETCH

LICENSED STRUCTURAL ENGINEER
MICHAEL T. HALEY
081-005991
CHATHAM
STATE OF ILLINOIS

Michael J. Haley — 04/23/2026
Michael T. Haley — Date
Licensed Structural Engineer
State of Illinois No. 081-005991
Expires 11/30/2026

APPROVED
FOR STRUCTURAL ADEQUACY ONLY
ENGINEER OF BRIDGES & STRUCTURES

GENERAL PLAN AND ELEVATION
ILLINOIS ROUTE 47 OVER BUCHANAN STREET
F.A.P. RTE. 326 - SEC. (111HB1)ES
GRUNDY COUNTY
STATION 39+00.00
STRUCTURE NO. 032-0087

MODEL: Br_Sheet_Consultant
FILE NAME: E:\2410-1\struct\Final Design\CADD (ORD)\CADD_Sheets\032008?-66M30-001-GPE.dgn

LIN ENGINEERING, LTD.
Consulting Engineers
Springfield, Illinois

USER NAME = Mike Haley	DESIGNED - CZ	REVISED -	
	DRAWN - SJH	REVISED -	
PLOT SCALE = $SCALE$	CHECKED - MTH	REVISED -	
PLOT DATE = 5/26/2026	CHECK DATE - 10/2025	REVISED -	

STATE OF ILLINOIS
DEPARTMENT OF TRANSPORTATION

SHEET 1 OF 30 SHEETS

F.A.P. RTE.	SECTION	COUNTY	TOTAL SHEETS	SHEET NO.
326	(111HB1)ES	GRUNDY	137	91
		CONTRACT NO. 66M30		
	ILLINOIS	FED. AID PROJECT		

GENERAL NOTES

1. Calculated weight of Structural Steel = 117,760 lbs. (AASHTO M270, Grade 50)
   33,590 lbs. (AASHTO M270, Grade 36)
2. No field welding is permitted except as specified in the contract documents.
3. Fasteners shall be ASTM F 3125 Grade A325 Type 1, mechanically galvanized bolts in painted areas. Bolts $\frac{7}{8}$ in. diameter, holes $1\frac{5}{16}$ in. diameter, unless otherwise noted.
4. Reinforcement bars designated (E) shall be epoxy coated.
5. The finishing machine rails shall be placed on the top of the top flange of the exterior beams within the deck pour. Beam blocks shall be placed between beams at all tie locations in each bay for the full width of the deck pour.
6. Slipforming of the parapets is not allowed.
7. Bearing seat surfaces shall be constructed or adjusted to the designated elevations within a tolerance of ⅛ in. (0.01 ft.). Adjustment shall be made either by grinding the surface or by shimming the bearings.
8. Plan dimensions and details relative to the existing structure have been taken from existing plans are subject to nominal construction variations. The Contractor shall field verify existing dimensions and details affecting new construction and make necessary approved adjustments prior to construction or ordering of materials. Such variations shall not be cause for additional compensation for a change in scope of the work; however, the Contractor will be paid for the quantity actually furnished at the unit price bid for the work.
9. The existing structural steel coating contains lead. The Contractor shall take appropriate precautions to address the presence of lead on this project.
10. The existing bearings contain lead plates. The Contractor shall take precautions to deal with the presence of lead on this project.
11. The Inorganic Zinc Rich Primer / Acrylic / Acrylic Paint System shall be used for shop and field painting of new structural steel except where otherwise noted. The color of the final finish coat for all interior steel surfaces shall be gray, Munsell No. 5B 7/1. The color of the final finish coat for the exterior and bottom flange of the fascia beams shall be Interstate Green, Munsell No. 7.5G 4/8

INDEX OF SHEETS

1. General Plan and Elevation
2. General Data
3-4. Stage Construction Details
5. Temporary Concrete Barrier
6-9. Top of Slab Elevations
10-11. Top of Approach Slab Elevations
12. Superstructure
13-14. Superstructure Details
15. Diaphragm Details
16-17. Bridge Approach Slab Details
18-19. Bridge Fence Railing, Curved
20. Drainage Scuppers, DS-11
21. Framing Plan
22. Steel Details
23-24. Bearing Details
25-26. Concrete Removal Details
27-28. Pier Repair Details
29. Slope Wall Repair Details
30. Bar Splicer Assembly and Mechanical Splicer Details

STA. 39+00.00
BUILT BY
STATE OF ILLINOIS
F.A.P. RT. 326 SEC. (111HB1)ES
LOADING HL-93
STR. NO. 032-0087

NAME PLATE

See Std. 515001

Existing Name Plate shall be cleaned and relocated next to new Name Plate. Cost included with Name Plates.

TOTAL BILL OF MATERIAL

ITEM	UNIT	SUPER	SUB	TOTAL
Removal of Existing Superstructures No. 2	Each	1	-	1
Concrete Removal	Cu. Yd.	-	28.0	28.0
Protective Shield	Sq. Yd.	351	-	351
Structure Excavation	Cu. Yd.	-	221	221
Concrete Structures	Cu. Yd.	-	40.8	40.8
Concrete Superstructure	Cu. Yd.	356.3	-	356.3
Bridge Deck Grooving	Sq. Yd.	997	-	997
Protective Coat	Sq. Yd.	1,476	-	1,476
Concrete Superstructure (Approach Slab)	Cu. Yd.	191.6	-	191.6
Furnishing and Erecting Structural Steel	L. Sum	0.5	-	0.5
Stud Shear Connectors	Each	7,650	-	7,650
Reinforcement Bars, Epoxy Coated	Pound	130,890	7,170	138,060
Bar Splicers	Each	598	80	678
Bridge Fence Railing, Curved	Foot	297	-	297
Name Plates	Each	1	-	1
Elastomeric Bearing Assembly, Type I	Each	-	30	30
Anchor Bolts, 3/4"	Each	-	40	40
Anchor Bolts, 1"	Each	-	40	40
Temporary Sheet Piling	Sq. Ft.	-	246	246
Granular Backfill for Structures	Cu. Yd.	-	202	202
Epoxy Crack Injection	Foot	-	51	51
Geocomposite Wall Drain	Sq. Yd.	-	97	97
Pipe Underdrains for Structures 4"	Foot	-	168	168
Bar Terminators	Each	524	-	524
Slope Wall Crack Sealing	Foot	-	80	80
Structural Repair of Concrete (Depth Equal to or Less Than 5 Inches)	Sq. Ft.	-	16	16
Drainage Scuppers, DS-11	Each	4	-	4

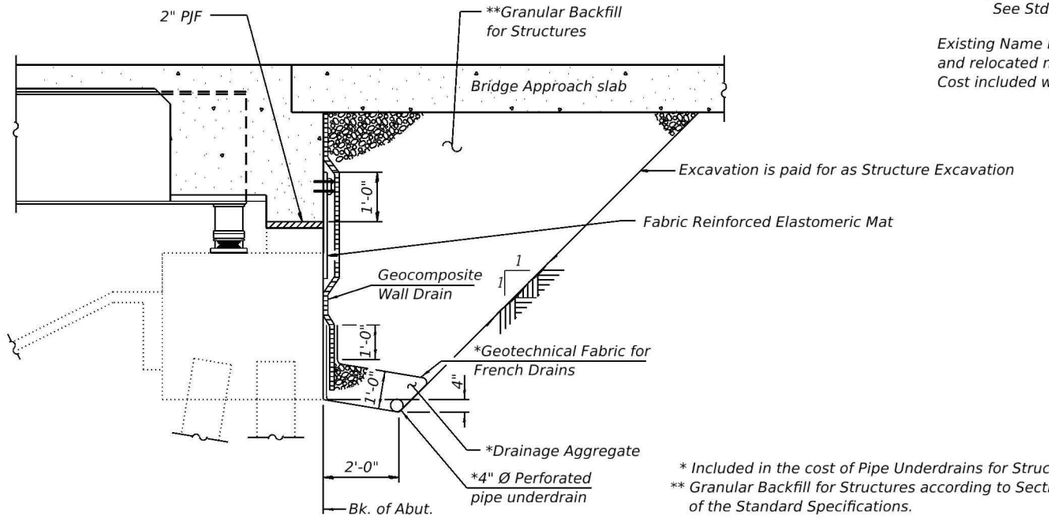

SECTION THRU SEMI-INTEGRAL ABUTMENT

(Horizontal dimensions at Rt. L's to abutment)

* Included in the cost of Pipe Underdrains for Structures.
** Granular Backfill for Structures according to Section 586 of the Standard Specifications.

Note:
All drainage system components shall extend to 2'-0" from the end of each wingwall except an outlet pipe shall extend until intersecting with the side slopes. The pipes shall drain into concrete headwalls. (See Article 601.05 of the Standard Specifications and Highway Standard 601101).

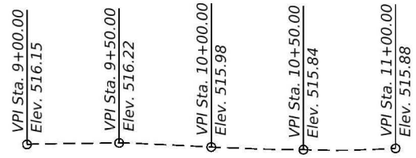

PROFILE GRADE – BUCHANAN ST.

(Along ℄ Roadway)

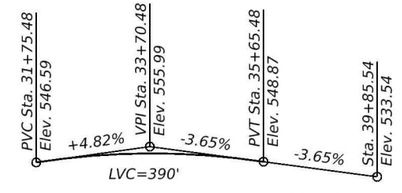

PROFILE GRADE – IL 47

(2ft off ℄ Roadway)

MODEL: Br_Sheet_Consultant
FILE NAME: E:\2410-1\struct\Final Design\CADD (ORD)\CADD_Sheets\0320087-66M30-002-GenData.dgn

LIN ENGINEERING, LTD.
Consulting Engineers
Springfield, Illinois

USER NAME = Lin10-PC	DESIGNED - CZ	REVISED -	
	DRAWN - SJH	REVISED -	
PLOT SCALE = $SCALE$	CHECKED - MTH	REVISED -	
PLOT DATE = 6/23/2026	CHECK DATE - 10/2025	REVISED -	

STATE OF ILLINOIS
DEPARTMENT OF TRANSPORTATION

GENERAL DATA
STRUCTURE NO. 032-0087
SHEET 2 OF 30 SHEETS

F.A.P. RTE.	SECTION	COUNTY	TOTAL SHEETS	SHEET NO.
326	(111HB1)ES	GRUNDY	137	92
		CONTRACT NO. 66M30		
		ILLINOIS	FED. AID PROJECT	

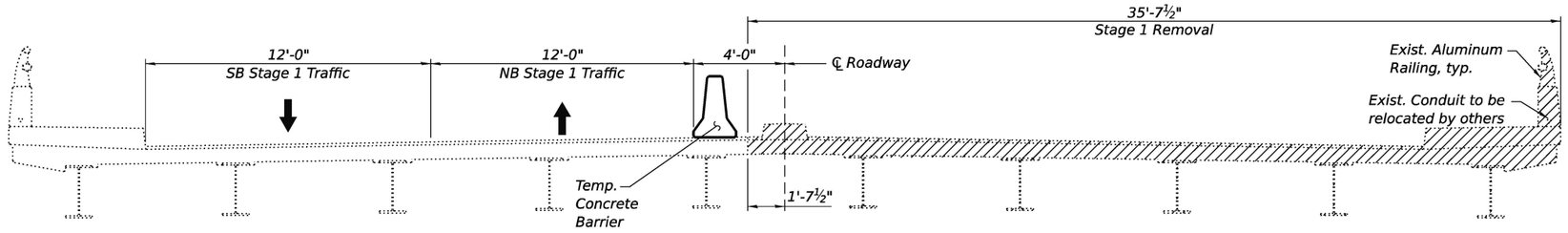

STAGE 1 REMOVAL

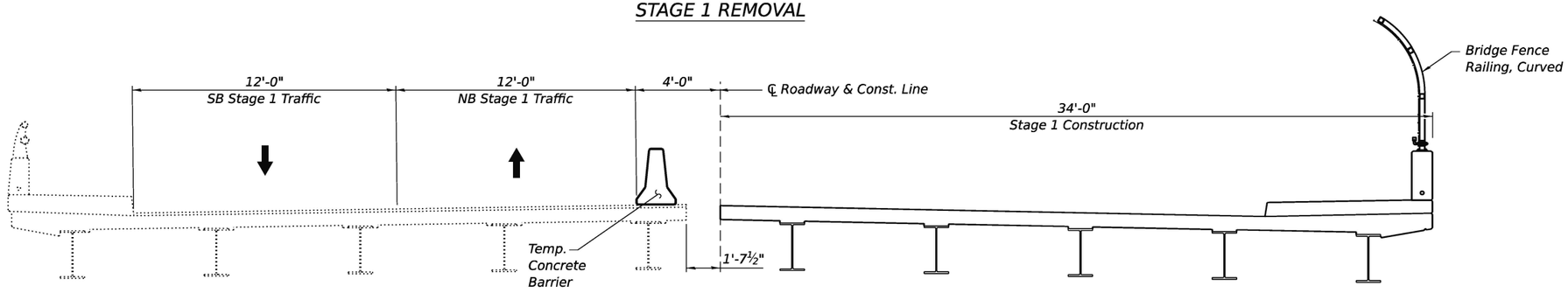

STAGE 1 CONSTRUCTION

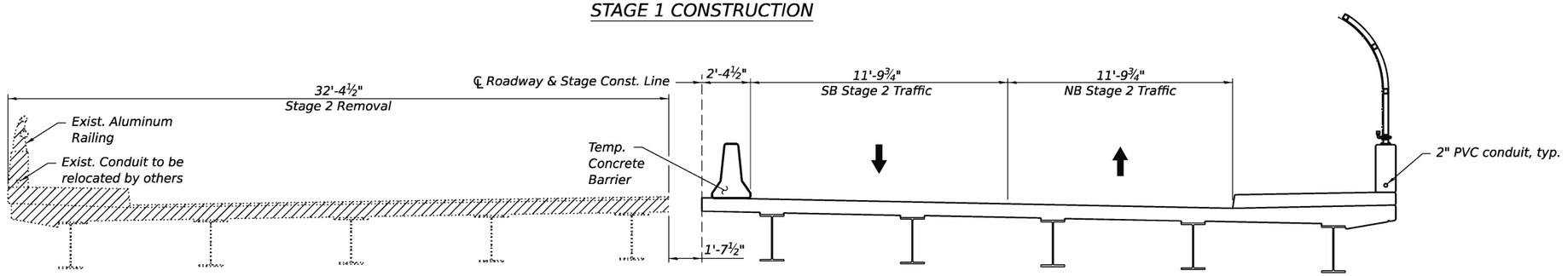

STAGE 2 REMOVAL

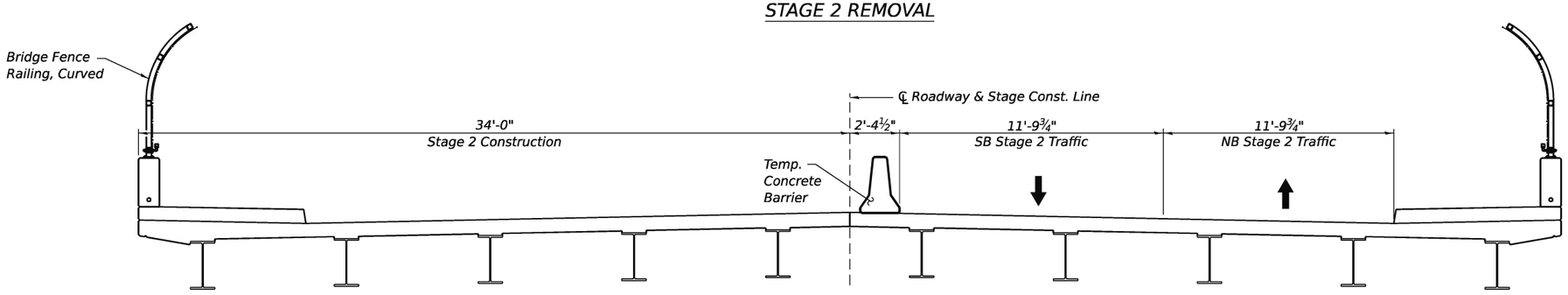

STAGE 2 CONSTRUCTION

Notes:
All sections are looking North.
Hatching represents limits of removal.
See sheet 5 of 30 for Temporary Concrete Barrier.
See Roadway plans for quantity of Temporary Concrete Barrier.
Cost of removal of existing aluminum railing and wearing surface is included with Removal of Existing Superstructure No. 2.

MODEL: Br_Sheet_Consultant
FILE NAME: E:\2410-1\struct\Final Design\CADD (ORD)\CADD_Sheets\0320087-66M30-003-StgConstDtls1.dgn

LIN ENGINEERING,LTD.
Consulting Engineers
Springfield, Illinois

USER NAME = Mike Haley	DESIGNED - CZ	REVISED -	
	DRAWN - SJH	REVISED -	
PLOT SCALE = $SCALE$	CHECKED - MTH	REVISED -	
PLOT DATE = 5/19/2026	CHECK DATE - 10/2025	REVISED -	

STATE OF ILLINOIS
DEPARTMENT OF TRANSPORTATION

STAGE CONSTRUCTION DETAILS
STRUCTURE NO. 032-0087
SHEET 3 OF 30 SHEETS

F.A.P. RTE.	SECTION	COUNTY	TOTAL SHEETS	SHEET NO.
326	(111HB1)ES	GRUNDY	137	93
		CONTRACT NO. 66M30		
	ILLINOIS FED. AID PROJECT			

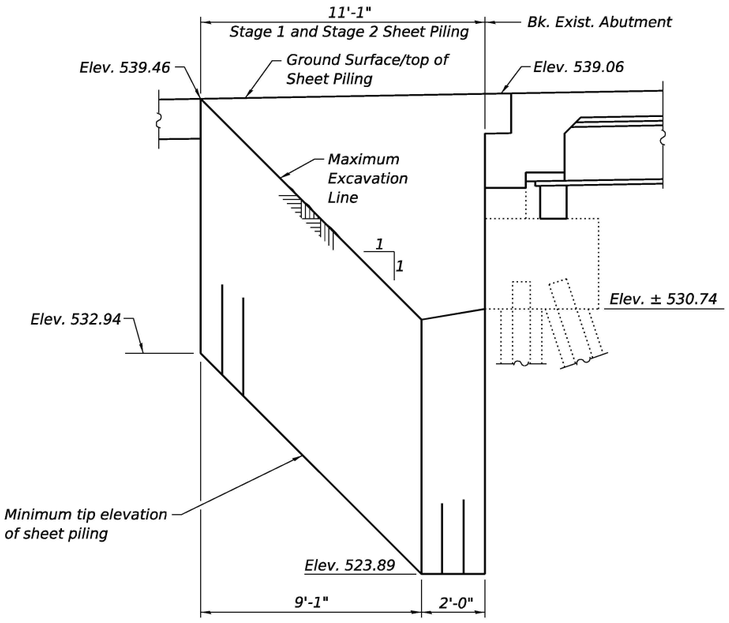

TEMPORARY SHEET PILING AT SOUTH ABUTMENT

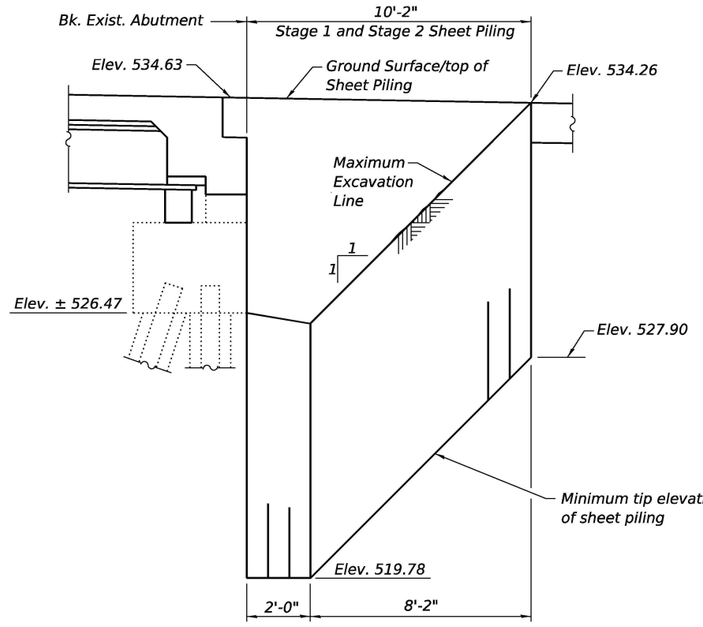

TEMPORARY SHEET PILING AT NORTH ABUTMENT

Notes:
If the Contractor chooses to alter the temporary cantilevered sheet piling design requirements shown on the plans, a design submittal including plan details and calculations will be required for review and acceptance by the Engineer.
Min. Section Modulus for sheeting = 4.61 in³/ft (typ.).

MODEL: Br_Sheet_Consultant
FILE NAME: E:\2410-1\struct\Final Design\CADD (ORD)\CADD_Sheets\0320087-66M30-004-SigConstDtls2.dgn

LIN ENGINEERING,LTD. Consulting Engineers Springfield, Illinois	USER NAME = Mike Haley	DESIGNED - CZ	REVISED -	STATE OF ILLINOIS DEPARTMENT OF TRANSPORTATION	STAGE CONSTRUCTION DETAILS STRUCTURE NO. 032-0087
		DRAWN - SJH	REVISED -		
	PLOT SCALE = $SCALE$	CHECKED - MTH	REVISED -		
	PLOT DATE = 5/19/2026	CHECK DATE - 10/2025	REVISED -		SHEET 4 OF 30 SHEETS

F.A.P. RTE.	SECTION	COUNTY	TOTAL SHEETS	SHEET NO.
326	(111HB1)ES	GRUNDY	137	94
		CONTRACT NO. 66M30		
		ILLINOIS	FED. AID PROJECT	

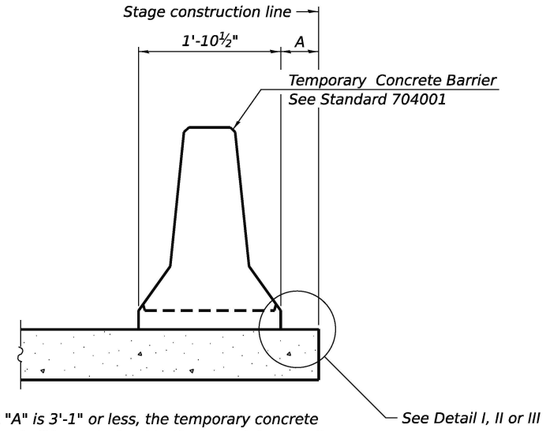

When "A" is 3'-1" or less, the temporary concrete barrier shall be restrained to the new slab according to Detail I, II or III. No restraint is required when "A" is greater than 3'-1".

NEW SLAB OR NEW DECK BEAM

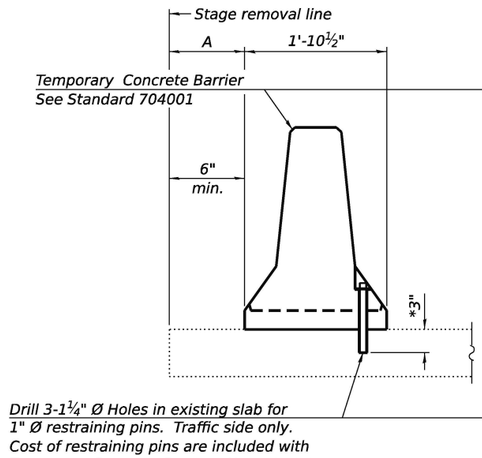

Drill 3-1¼" Ø Holes in existing slab for 1" Ø restraining pins. Traffic side only. Cost of restraining pins are included with Temporary Concrete Barrier. No restraint is required when "A" is greater than 3'-1".

EXISTING SLAB

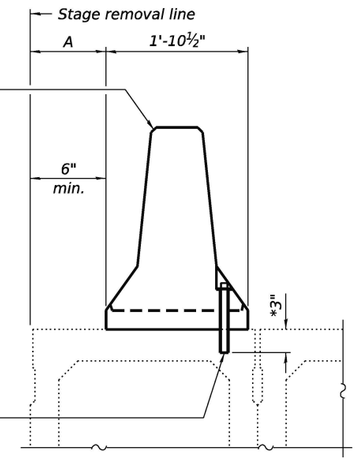

* When hot-mix asphalt wearing surface is present, embedment shall be 3" plus the wearing surface depth.

EXISTING DECK BEAM

SECTIONS THRU SLAB OR DECK BEAM

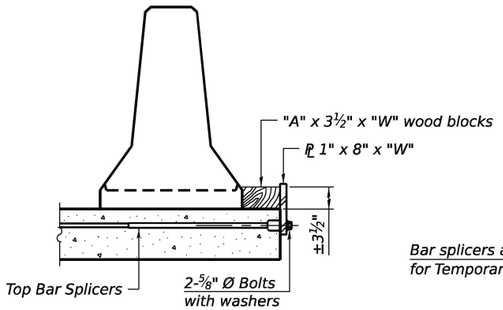

DETAIL I

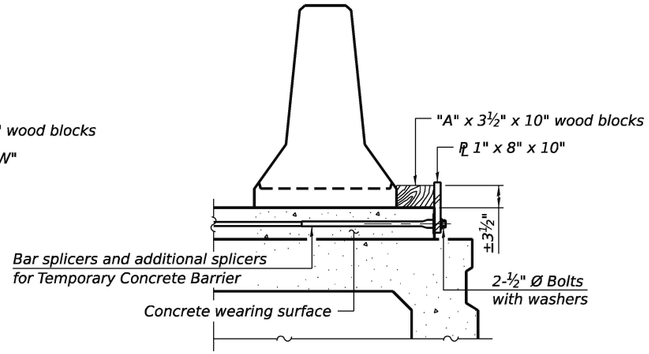

DETAIL II

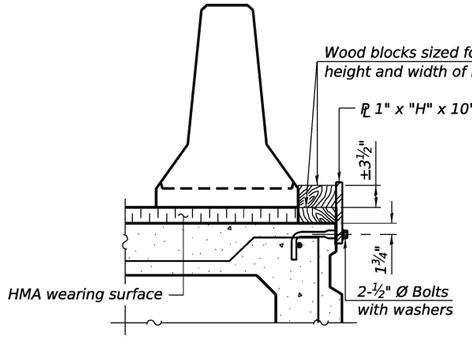

DETAIL III

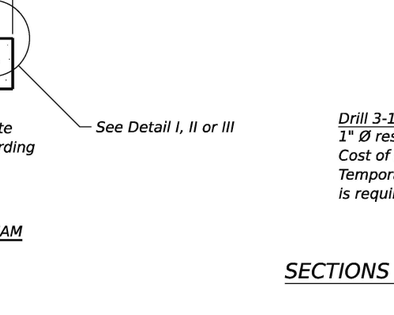

STEEL RETAINER ℄ 1" x 8" x "W"
(Detail I and II)

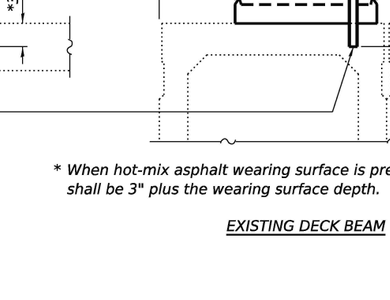

STEEL RETAINER ℄ 1" x "H" x 10"
(Detail III)

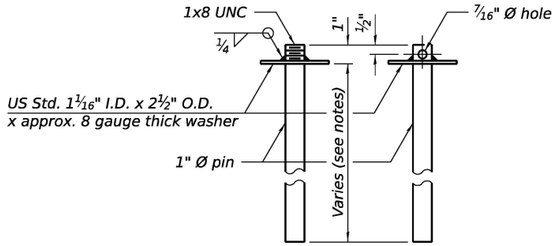

RESTRAINING PIN

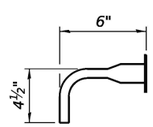

BAR SPLICER FOR #4 BAR - DETAIL III

Notes:
Cost of retainer assembly is included with Temporary Concrete Barrier.
A retainer assembly shall be located at the approximate ℄ of each temporary concrete barrier.
The retainer plate shall not be removed until the concrete on the adjacent stage is ready to be poured. For Detail III applications the retainer plate shall not be removed until just prior to placing the adjacent beam.
When the 'A' dimension is less than 1½", the wood block shall be omitted and the barrier shall be placed in direct contact with the steel retainer plate. For deck beam applications the minimum required 'A' distance is 6" to accommodate the shear key clamping device.

Detail I - Installation for a new bridge deck or bridge slab.

Detail II - Installation for a new deck beam with an initial concrete wearing surface. Additional bar splicers shall be provided at 6'-0" centers and paired with the bar splicers of the concrete wearing surface reinforcement to accommodate the installation of the retainer assemblies. The cost of the additional bar splicers is included with the concrete wearing surface.

Detail III - Installation for a new deck beam with no initial wearing surface or with an initial hot-mix asphalt (HMA) wearing surface present. The deck beam directly beneath the temporary concrete barrier shall be fabricated with bar splicer inserts in the side of the beam, as detailed, to accommodate the installation of the retainer assemblies. A pair of bar splicers, 6" apart, shall be placed at 6'-0" centers along the length of the beam. The cost of the bar splicers is included with the deck beam.

RAILING CRITERIA

NCHRP 350 Test Level	3
Railing Weight (plf)	440

R-27

5-15-2023

MODEL: Br_Sheet_Consultant
FILE NAME: E:\2410-1\struct\Final Design\CADD (ORD)\CADD_Sheets\0320087-66M30-005-TempConcBarrier.dgn

LIN ENGINEERING,LTD.
Consulting Engineers
Springfield, Illinois

USER NAME = Mike Haley	DESIGNED - CZ	REVISED -	
	DRAWN - SJH	REVISED -	
PLOT SCALE = $SCALE$	CHECKED - MTH	REVISED -	
PLOT DATE = 5/19/2026	CHECK DATE - 10/2025	REVISED -	

STATE OF ILLINOIS
DEPARTMENT OF TRANSPORTATION

TEMPORARY CONCRETE BARRIER
STRUCTURE NO. 032-0087
SHEET 5 OF 30 SHEETS

F.A.P. RTE.	SECTION	COUNTY	TOTAL SHEETS	SHEET NO.
326	(111HB1)ES	GRUNDY	137	95
		CONTRACT NO. 66M30		
	ILLINOIS FED. AID PROJECT			

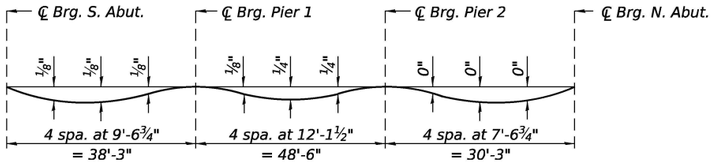

DEAD LOAD DEFLECTION DIAGRAM

(Includes weight of concrete only)

Note:
The above deflections are not to be used in the field if the engineer is working from the grade elevations adjusted for dead load deflections as shown on sheets 7 thru 9 of 30.

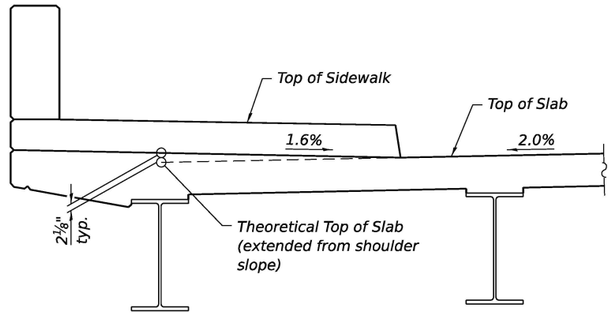

DETAIL AT SIDEWALK

Elevations at Beams 1 and 10 are provided at Theoretical Top of Slab below sidewalk as shown.

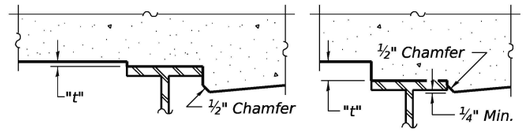

At Minimum Fillet — At Maximum Fillet

To determine "t": After all structural steel has been erected, elevations of the top flanges of the beams shall be taken at intervals shown below. These elevations subtracted from the "Theoretical Grade Elevations Adjusted for Dead Load Deflection" shown on sheets 7 thru 9 of 30, minus slab thickness, equals the fillet heights "t" above top flange of beams.

FILLET HEIGHTS

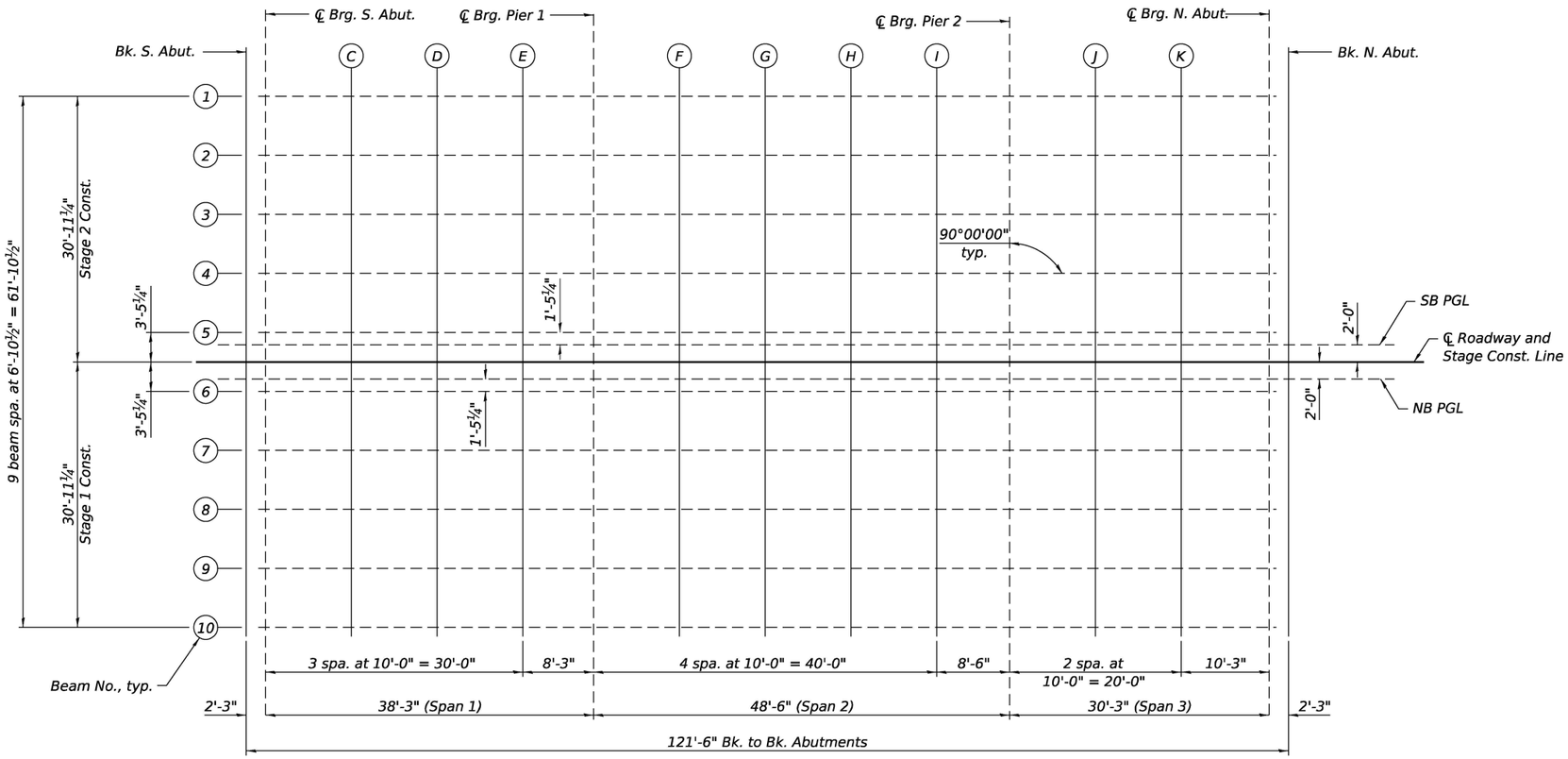

PLAN

MODEL: Br_Sheet_Consultant
FILE NAME: E:\2410-1\struct\Final Design\CADD (ORD)\CADD_Sheets\0320087-66M30-006-TOSElevs1.dgn

LIN ENGINEERING,LTD. Consulting Engineers Springfield, Illinois	USER NAME = Lin10-PC	DESIGNED - CZ	REVISED -	STATE OF ILLINOIS DEPARTMENT OF TRANSPORTATION	TOP OF SLAB ELEVATIONS STRUCTURE NO. 032-0087
		DRAWN - SJH	REVISED -		
	PLOT SCALE = $SCALE$	CHECKED - MTH	REVISED -		
	PLOT DATE = 6/4/2026	CHECK DATE - 10/2025	REVISED -		SHEET 6 OF 30 SHEETS

F.A.P. RTE.	SECTION	COUNTY	TOTAL SHEETS	SHEET NO.
326	(111HB1)ES	GRUNDY	137	96
		CONTRACT NO. 66M30		
	ILLINOIS FED. AID PROJECT			

BEAM 1

Location	Station	Offset	Theoretical Grade Elevations	Theoretical Grade Elevations Adjusted For Dead Load Deflection
Bk. S. Abut	38+35.25	-30.94	538.44	538.44
℄ Brg. S. Abut.	38+37.50	-30.94	538.36	538.36
C	38+47.50	-30.94	538.00	538.01
D	38+57.50	-30.94	537.63	537.65
E	38+67.50	-30.94	537.27	537.27
℄ Brg. Pier 1	38+75.75	-30.94	536.97	536.97
F	38+85.75	-30.94	536.60	536.61
G	38+95.75	-30.94	536.24	536.26
H	39+05.75	-30.94	535.87	535.90
I	39+15.75	-30.94	535.51	535.52
℄ Brg. Pier 2	39+24.25	-30.94	535.20	535.20
J	39+34.25	-30.94	534.83	534.83
K	39+44.25	-30.94	534.47	534.47
℄ Brg. N. Abut.	39+54.50	-30.94	534.09	534.09
Bk. N. Abut.	39+56.75	-30.94	534.01	534.01

BEAM 2

Location	Station	Offset	Theoretical Grade Elevations	Theoretical Grade Elevations Adjusted For Dead Load Deflection
Bk. S. Abut	38+35.25	-24.06	538.58	538.58
℄ Brg. S. Abut.	38+37.50	-24.06	538.50	538.50
C	38+47.50	-24.06	538.14	538.15
D	38+57.50	-24.06	537.77	537.78
E	38+67.50	-24.06	537.41	537.41
℄ Brg. Pier 1	38+75.75	-24.06	537.10	537.10
F	38+85.75	-24.06	536.74	536.75
G	38+95.75	-24.06	536.37	536.40
H	39+05.75	-24.06	536.01	536.03
I	39+15.75	-24.06	535.64	535.65
℄ Brg. Pier 2	39+24.25	-24.06	535.33	535.33
J	39+34.25	-24.06	534.97	534.97
K	39+44.25	-24.06	534.60	534.61
℄ Brg. N. Abut.	39+54.50	-24.06	534.23	534.23
Bk. N. Abut.	39+56.75	-24.06	534.15	534.15

BEAM 3

Location	Station	Offset	Theoretical Grade Elevations	Theoretical Grade Elevations Adjusted For Dead Load Deflection
Bk. S. Abut	38+35.25	-17.19	538.72	538.72
℄ Brg. S. Abut.	38+37.50	-17.19	538.64	538.64
C	38+47.50	-17.19	538.27	538.28
D	38+57.50	-17.19	537.91	537.92
E	38+67.50	-17.19	537.54	537.55
℄ Brg. Pier 1	38+75.75	-17.19	537.24	537.24
F	38+85.75	-17.19	536.88	536.89
G	38+95.75	-17.19	536.51	536.53
H	39+05.75	-17.19	536.15	536.17
I	39+15.75	-17.19	535.78	535.79
℄ Brg. Pier 2	39+24.25	-17.19	535.47	535.47
J	39+34.25	-17.19	535.11	535.11
K	39+44.25	-17.19	534.74	534.74
℄ Brg. N. Abut.	39+54.50	-17.19	534.37	534.37
Bk. N. Abut.	39+56.75	-17.19	534.28	534.28

BEAM 4

Location	Station	Offset	Theoretical Grade Elevations	Theoretical Grade Elevations Adjusted For Dead Load Deflection
Bk. S. Abut	38+35.25	-10.31	538.86	538.86
℄ Brg. S. Abut.	38+37.50	-10.31	538.78	538.78
C	38+47.50	-10.31	538.41	538.42
D	38+57.50	-10.31	538.05	538.06
E	38+67.50	-10.31	537.68	537.68
℄ Brg. Pier 1	38+75.75	-10.31	537.38	537.38
F	38+85.75	-10.31	537.01	537.02
G	38+95.75	-10.31	536.65	536.67
H	39+05.75	-10.31	536.28	536.31
I	39+15.75	-10.31	535.92	535.93
℄ Brg. Pier 2	39+24.25	-10.31	535.61	535.61
J	39+34.25	-10.31	535.24	535.24
K	39+44.25	-10.31	534.88	534.88
℄ Brg. N. Abut.	39+54.50	-10.31	534.50	534.50
Bk. N. Abut.	39+56.75	-10.31	534.42	534.42

Note:
Offsets are measured from ℄ roadway.

MODEL: Br_Sheet_Consultant
FILE NAME: E:\2410-1\struct\Final Design\CADD (ORD)\CADD_Sheets\03220087-66M30-007-TOSElevs2.dgn

LIN ENGINEERING, LTD.
Consulting Engineers
Springfield, Illinois

USER NAME = Lin10-PC	DESIGNED - CZ	REVISED -	
	DRAWN - SJH	REVISED -	
PLOT SCALE = $SCALE$	CHECKED - MTH	REVISED -	
PLOT DATE = 6/4/2026	CHECK DATE - 10/2025	REVISED -	

STATE OF ILLINOIS
DEPARTMENT OF TRANSPORTATION

TOP OF SLAB ELEVATIONS
STRUCTURE NO. 032-0087
SHEET 7 OF 30 SHEETS

F.A.P. RTE.	SECTION	COUNTY	TOTAL SHEETS	SHEET NO.
326	(111HB1)ES	GRUNDY	137	97
		CONTRACT NO. 66M30		
	ILLINOIS	FED. AID PROJECT		

BEAM 5

Location	Station	Offset	Theoretical Grade Elevations	Theoretical Grade Elevations Adjusted For Dead Load Deflection
Bk. S. Abut	38+35.25	-3.44	538.99	538.99
℄ Brg. S. Abut.	38+37.50	-3.44	538.91	538.91
C	38+47.50	-3.44	538.55	538.56
D	38+57.50	-3.44	538.18	538.19
E	38+67.50	-3.44	537.82	537.82
℄ Brg. Pier 1	38+75.75	-3.44	537.52	537.52
F	38+85.75	-3.44	537.15	537.16
G	38+95.75	-3.44	536.79	536.81
H	39+05.75	-3.44	536.42	536.44
I	39+15.75	-3.44	536.06	536.07
℄ Brg. Pier 2	39+24.25	-3.44	535.75	535.75
J	39+34.25	-3.44	535.38	535.38
K	39+44.25	-3.44	535.02	535.02
℄ Brg. N. Abut.	39+54.50	-3.44	534.64	534.64
Bk. N. Abut.	39+56.75	-3.44	534.56	534.56

SB PGL

Location	Station	Offset	Theoretical Grade Elevations	Theoretical Grade Elevations Adjusted For Dead Load Deflection
Bk. S. Abut	38+35.25	-2.00	539.02	539.02
℄ Brg. S. Abut.	38+37.50	-2.00	538.94	538.94
C	38+47.50	-2.00	538.58	538.59
D	38+57.50	-2.00	538.21	538.22
E	38+67.50	-2.00	537.85	537.85
℄ Brg. Pier 1	38+75.75	-2.00	537.55	537.55
F	38+85.75	-2.00	537.18	537.19
G	38+95.75	-2.00	536.82	536.84
H	39+05.75	-2.00	536.45	536.47
I	39+15.75	-2.00	536.09	536.10
℄ Brg. Pier 2	39+24.25	-2.00	535.77	535.77
J	39+34.25	-2.00	535.41	535.41
K	39+44.25	-2.00	535.04	535.05
℄ Brg. N. Abut.	39+54.50	-2.00	534.67	534.67
Bk. N. Abut.	39+56.75	-2.00	534.59	534.59

℄ ROADWAY & STAGE CONSTRUCTION LINE

Location	Station	Offset	Theoretical Grade Elevations	Theoretical Grade Elevations Adjusted For Dead Load Deflection
Bk. S. Abut	38+35.25	0.00	539.06	539.06
℄ Brg. S. Abut.	38+37.50	0.00	538.98	538.98
C	38+47.50	0.00	538.62	538.63
D	38+57.50	0.00	538.25	538.26
E	38+67.50	0.00	537.89	537.89
℄ Brg. Pier 1	38+75.75	0.00	537.59	537.59
F	38+85.75	0.00	537.22	537.23
G	38+95.75	0.00	536.86	536.88
H	39+05.75	0.00	536.49	536.51
I	39+15.75	0.00	536.13	536.14
℄ Brg. Pier 2	39+24.25	0.00	535.81	535.81
J	39+34.25	0.00	535.45	535.45
K	39+44.25	0.00	535.08	535.09
℄ Brg. N. Abut.	39+54.50	0.00	534.71	534.71
Bk. N. Abut.	39+56.75	0.00	534.63	534.63

NB PGL

Location	Station	Offset	Theoretical Grade Elevations	Theoretical Grade Elevations Adjusted For Dead Load Deflection
Bk. S. Abut	38+35.25	2.00	539.02	539.02
℄ Brg. S. Abut.	38+37.50	2.00	538.94	538.94
C	38+47.50	2.00	538.58	538.59
D	38+57.50	2.00	538.21	538.22
E	38+67.50	2.00	537.85	537.85
℄ Brg. Pier 1	38+75.75	2.00	537.55	537.55
F	38+85.75	2.00	537.18	537.19
G	38+95.75	2.00	536.82	536.84
H	39+05.75	2.00	536.45	536.47
I	39+15.75	2.00	536.09	536.10
℄ Brg. Pier 2	39+24.25	2.00	535.77	535.77
J	39+34.25	2.00	535.41	535.41
K	39+44.25	2.00	535.04	535.05
℄ Brg. N. Abut.	39+54.50	2.00	534.67	534.67
Bk. N. Abut.	39+56.75	2.00	534.59	534.59

Note:
Offsets are measured from ℄ roadway.

MODEL: Br_Sheet_Consultant
FILE NAME: E:\2410-1\struct\Final Design\CADD (ORD)\CADD_Sheets\03220087-66M30-008-TOSElevs3.dgn

LIN ENGINEERING, LTD.
Consulting Engineers
Springfield, Illinois

USER NAME = Mike Haley	DESIGNED - CZ	REVISED -	
	DRAWN - SJH	REVISED -	
PLOT SCALE = $SCALE$	CHECKED - MTH	REVISED -	
PLOT DATE = 5/19/2026	CHECK DATE - 10/2025	REVISED -	

STATE OF ILLINOIS
DEPARTMENT OF TRANSPORTATION

TOP OF SLAB ELEVATIONS
STRUCTURE NO. 032-0087
SHEET 8 OF 30 SHEETS

F.A.P. RTE.	SECTION	COUNTY	TOTAL SHEETS	SHEET NO.
326	(111HB1)ES	GRUNDY	137	98
		CONTRACT NO. 66M30		
	ILLINOIS	FED. AID PROJECT		

BEAM 6

Location	Station	Offset	Theoretical Grade Elevations	Theoretical Grade Elevations Adjusted For Dead Load Deflection
Bk. S. Abut	38+35.25	3.44	538.99	538.99
℄ Brg. S. Abut.	38+37.50	3.44	538.91	538.91
C	38+47.50	3.44	538.55	538.56
D	38+57.50	3.44	538.18	538.19
E	38+67.50	3.44	537.82	537.82
℄ Brg. Pier 1	38+75.75	3.44	537.52	537.52
F	38+85.75	3.44	537.15	537.16
G	38+95.75	3.44	536.79	536.81
H	39+05.75	3.44	536.42	536.44
I	39+15.75	3.44	536.06	536.07
℄ Brg. Pier 2	39+24.25	3.44	535.75	535.75
J	39+34.25	3.44	535.38	535.38
K	39+44.25	3.44	535.02	535.02
℄ Brg. N. Abut.	39+54.50	3.44	534.64	534.64
Bk. N. Abut.	39+56.75	3.44	534.56	534.56

BEAM 7

Location	Station	Offset	Theoretical Grade Elevations	Theoretical Grade Elevations Adjusted For Dead Load Deflection
Bk. S. Abut	38+35.25	10.31	538.86	538.86
℄ Brg. S. Abut.	38+37.50	10.31	538.78	538.78
C	38+47.50	10.31	538.41	538.42
D	38+57.50	10.31	538.05	538.06
E	38+67.50	10.31	537.68	537.68
℄ Brg. Pier 1	38+75.75	10.31	537.38	537.38
F	38+85.75	10.31	537.01	537.02
G	38+95.75	10.31	536.65	536.67
H	39+05.75	10.31	536.28	536.31
I	39+15.75	10.31	535.92	535.93
℄ Brg. Pier 2	39+24.25	10.31	535.61	535.61
J	39+34.25	10.31	535.24	535.24
K	39+44.25	10.31	534.88	534.88
℄ Brg. N. Abut.	39+54.50	10.31	534.50	534.50
Bk. N. Abut.	39+56.75	10.31	534.42	534.42

BEAM 8

Location	Station	Offset	Theoretical Grade Elevations	Theoretical Grade Elevations Adjusted For Dead Load Deflection
Bk. S. Abut	38+35.25	17.19	538.72	538.72
℄ Brg. S. Abut.	38+37.50	17.19	538.64	538.64
C	38+47.50	17.19	538.27	538.28
D	38+57.50	17.19	537.91	537.92
E	38+67.50	17.19	537.54	537.55
℄ Brg. Pier 1	38+75.75	17.19	537.24	537.24
F	38+85.75	17.19	536.88	536.89
G	38+95.75	17.19	536.51	536.53
H	39+05.75	17.19	536.15	536.17
I	39+15.75	17.19	535.78	535.79
℄ Brg. Pier 2	39+24.25	17.19	535.47	535.47
J	39+34.25	17.19	535.11	535.11
K	39+44.25	17.19	534.74	534.74
℄ Brg. N. Abut.	39+54.50	17.19	534.37	534.37
Bk. N. Abut.	39+56.75	17.19	534.28	534.28

BEAM 9

Location	Station	Offset	Theoretical Grade Elevations	Theoretical Grade Elevations Adjusted For Dead Load Deflection
Bk. S. Abut	38+35.25	24.06	538.58	538.58
℄ Brg. S. Abut.	38+37.50	24.06	538.50	538.50
C	38+47.50	24.06	538.14	538.15
D	38+57.50	24.06	537.77	537.78
E	38+67.50	24.06	537.41	537.41
℄ Brg. Pier 1	38+75.75	24.06	537.10	537.10
F	38+85.75	24.06	536.74	536.75
G	38+95.75	24.06	536.37	536.40
H	39+05.75	24.06	536.01	536.03
I	39+15.75	24.06	535.64	535.65
℄ Brg. Pier 2	39+24.25	24.06	535.33	535.33
J	39+34.25	24.06	534.97	534.97
K	39+44.25	24.06	534.60	534.61
℄ Brg. N. Abut.	39+54.50	24.06	534.23	534.23
Bk. N. Abut.	39+56.75	24.06	534.15	534.15

BEAM 10

Location	Station	Offset	Theoretical Grade Elevations	Theoretical Grade Elevations Adjusted For Dead Load Deflection
Bk. S. Abut	38+35.25	30.94	538.44	538.44
℄ Brg. S. Abut.	38+37.50	30.94	538.36	538.36
C	38+47.50	30.94	538.00	538.01
D	38+57.50	30.94	537.63	537.65
E	38+67.50	30.94	537.27	537.27
℄ Brg. Pier 1	38+75.75	30.94	536.97	536.97
F	38+85.75	30.94	536.60	536.61
G	38+95.75	30.94	536.24	536.26
H	39+05.75	30.94	535.87	535.90
I	39+15.75	30.94	535.51	535.52
℄ Brg. Pier 2	39+24.25	30.94	535.20	535.20
J	39+34.25	30.94	534.83	534.83
K	39+44.25	30.94	534.47	534.47
℄ Brg. N. Abut.	39+54.50	30.94	534.09	534.09
Bk. N. Abut.	39+56.75	30.94	534.01	534.01

Note:
Offsets are measured from ℄ roadway.

MODEL: Br_Sheet_Consultant
FILE NAME: E:\2410-1\struct\Final Design\CADD (ORD)\CADD_Sheets\03220087-66M30-009-TOSElevs4.dgn

LIN ENGINEERING, LTD.
Consulting Engineers
Springfield, Illinois

USER NAME = Lin10-PC	DESIGNED - CZ	REVISED -	
	DRAWN - SJH	REVISED -	
PLOT SCALE = $SCALE$	CHECKED - MTH	REVISED -	
PLOT DATE = 6/4/2026	CHECK DATE - 10/2025	REVISED -	

STATE OF ILLINOIS
DEPARTMENT OF TRANSPORTATION

TOP OF SLAB ELEVATIONS
STRUCTURE NO. 032-0087

SHEET 9 OF 30 SHEETS

F.A.P. RTE.	SECTION	COUNTY	TOTAL SHEETS	SHEET NO.
326	(111HB1)ES	GRUNDY	137	99
		CONTRACT NO. 66M30		
	ILLINOIS	FED. AID PROJECT		

WEST CURB LINE

Location	Station	Offset	Theoretical Grade Elevations
S. End of S. Approach Slab	38+06.25	-26.00	539.60
A	38+16.25	-26.00	539.24
B	38+26.25	-26.00	538.87
N. End of S. Approach Slab	38+36.25	-26.00	538.51

SB PGL

Location	Station	Offset	Theoretical Grade Elevations
S. End of S. Approach Slab	38+06.25	-2.00	540.08
A	38+16.25	-2.00	539.72
B	38+26.25	-2.00	539.35
N. End of S. Approach Slab	38+36.25	-2.00	538.99

℄ ROADWAY, STAGE CONSTRUCTION LINE & CROWN

Location	Station	Offset	Theoretical Grade Elevations
S. End of S. Approach Slab	38+06.25	0.00	540.12
A	38+16.25	0.00	539.76
B	38+26.25	0.00	539.39
N. End of S. Approach Slab	38+36.25	0.00	539.03

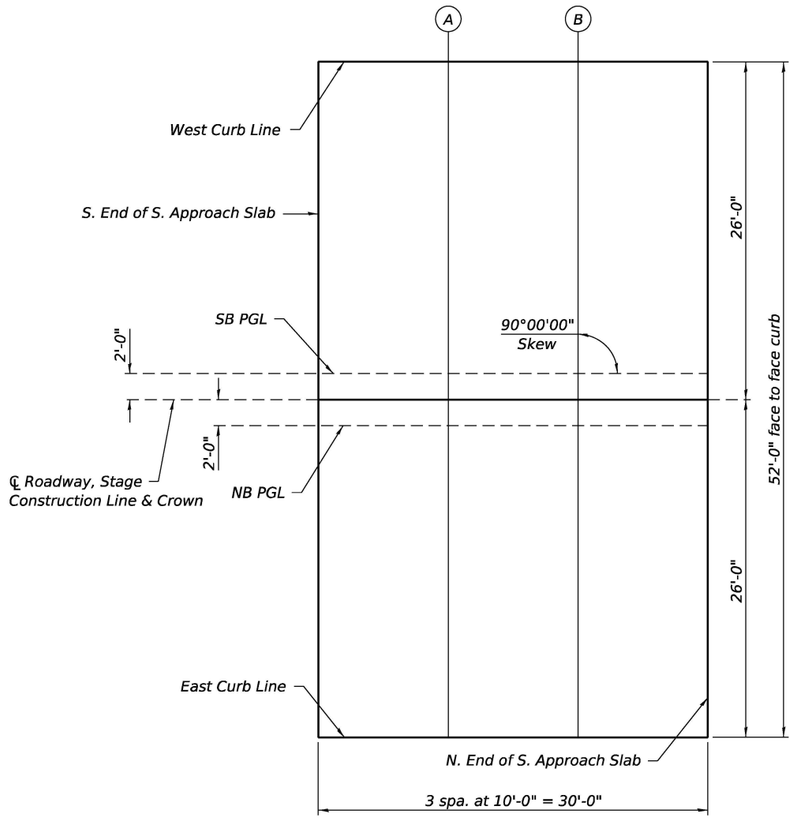

NB PGL

Location	Station	Offset	Theoretical Grade Elevations
S. End of S. Approach Slab	38+06.25	2.00	540.08
A	38+16.25	2.00	539.72
B	38+26.25	2.00	539.35
N. End of S. Approach Slab	38+36.25	2.00	538.99

EAST CURB LINE

Location	Station	Offset	Theoretical Grade Elevations
S. End of S. Approach Slab	38+06.25	26.00	539.60
A	38+16.25	26.00	539.24
B	38+26.25	26.00	538.87
N. End of S. Approach Slab	38+36.25	26.00	538.51

Note:
Offsets are measured from ℄ roadway.

SOUTH APPROACH PLAN

(Sheet 1 of 2)

MODEL: Br_Sheet_Consultant
FILE NAME: E:\2410-1\struct\Final Design\CADD (ORD)\CADD_Sheets\03220087-66M30-010-TOASEIevs1.dgn

LIN ENGINEERING,LTD.
Consulting Engineers
Springfield, Illinois

USER NAME = Mike Haley	DESIGNED - CZ	REVISED -	
	DRAWN - SJH	REVISED -	
PLOT SCALE = $SCALE$	CHECKED - MTH	REVISED -	
PLOT DATE = 5/19/2026	CHECK DATE - 10/2025	REVISED -	

STATE OF ILLINOIS
DEPARTMENT OF TRANSPORTATION

TOP OF APPROACH SLAB ELEVATIONS
STRUCTURE NO. 032-0087
SHEET 10 OF 30 SHEETS

F.A.P. RTE.	SECTION	COUNTY	TOTAL SHEETS	SHEET NO.
326	(111HB1)ES	GRUNDY	137	100
		CONTRACT NO. 66M30		
	ILLINOIS	FED. AID PROJECT		

WEST CURB LINE

Location	Station	Offset	Theoretical Grade Elevations
S. End of N. Approach Slab	39+55.75	-26.00	534.15
L	39+65.75	-26.00	533.78
M	39+75.75	-26.00	533.42
N. End of N. Approach Slab	39+85.75	-26.00	533.05

SB PGL

Location	Station	Offset	Theoretical Grade Elevations
S. End of N. Approach Slab	39+55.75	-2.00	534.63
L	39+65.75	-2.00	534.26
M	39+75.75	-2.00	533.90
N. End of N. Approach Slab	39+85.75	-2.00	533.53

℄ ROADWAY, STAGE CONSTRUCTION LINE & CROWN

Location	Station	Offset	Theoretical Grade Elevations
S. End of N. Approach Slab	39+55.75	0.00	534.67
L	39+65.75	0.00	534.30
M	39+75.75	0.00	533.94
N. End of N. Approach Slab	39+85.75	0.00	533.57

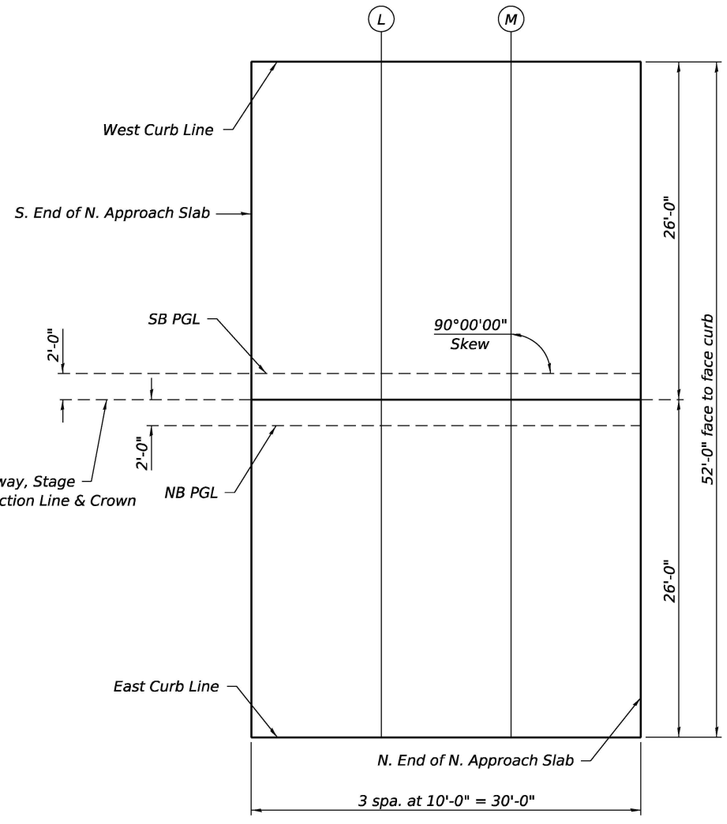

NB PGL

Location	Station	Offset	Theoretical Grade Elevations
S. End of N. Approach Slab	39+55.75	2.00	534.63
L	39+65.75	2.00	534.26
M	39+75.75	2.00	533.90
N. End of N. Approach Slab	39+85.75	2.00	533.53

EAST CURB LINE

Location	Station	Offset	Theoretical Grade Elevations
S. End of N. Approach Slab	39+55.75	26.00	534.15
L	39+65.75	26.00	533.78
M	39+75.75	26.00	533.42
N. End of N. Approach Slab	39+85.75	26.00	533.05

Note:
Offsets are measured from ℄ roadway.

NORTH APPROACH PLAN

(Sheet 2 of 2)

MODEL: Br_Sheet_Consultant
FILE NAME: E:\2410-1\struct\Final Design\CADD (ORD)\CADD_Sheets\03220087-66M30-011-TOASEIevs2.dgn

LIN ENGINEERING, LTD.
Consulting Engineers
Springfield, Illinois

USER NAME = Mike Haley	DESIGNED - CZ	REVISED -	
	DRAWN - SJH	REVISED -	
PLOT SCALE = $SCALE$	CHECKED - MTH	REVISED -	
PLOT DATE = 5/19/2026	CHECK DATE - 10/2025	REVISED -	

STATE OF ILLINOIS
DEPARTMENT OF TRANSPORTATION

TOP OF APPROACH SLAB ELEVATIONS
STRUCTURE NO. 032-0087
SHEET 11 OF 30 SHEETS

F.A.P. RTE.	SECTION	COUNTY	TOTAL SHEETS	SHEET NO.
326	(111HB1)ES	GRUNDY	137	101
		CONTRACT NO. 66M30		
		ILLINOIS	FED. AID PROJECT	

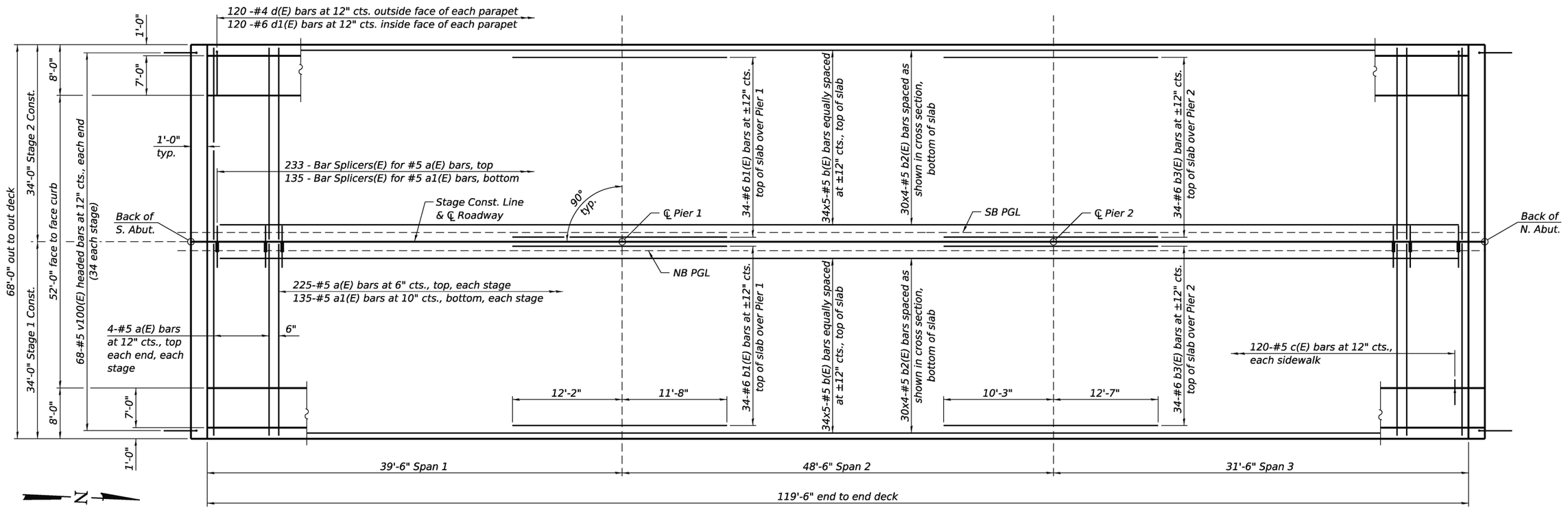

PLAN

Notes:
See sheets 13 and 14 of 30 for superstructure details and Bill of Material.
Bars indicated thus 20 x 3-#5 etc. indicates 20 lines of bars with 3 lengths per line.

MINIMUM BAR LAP
#5 bar = 3'-10"

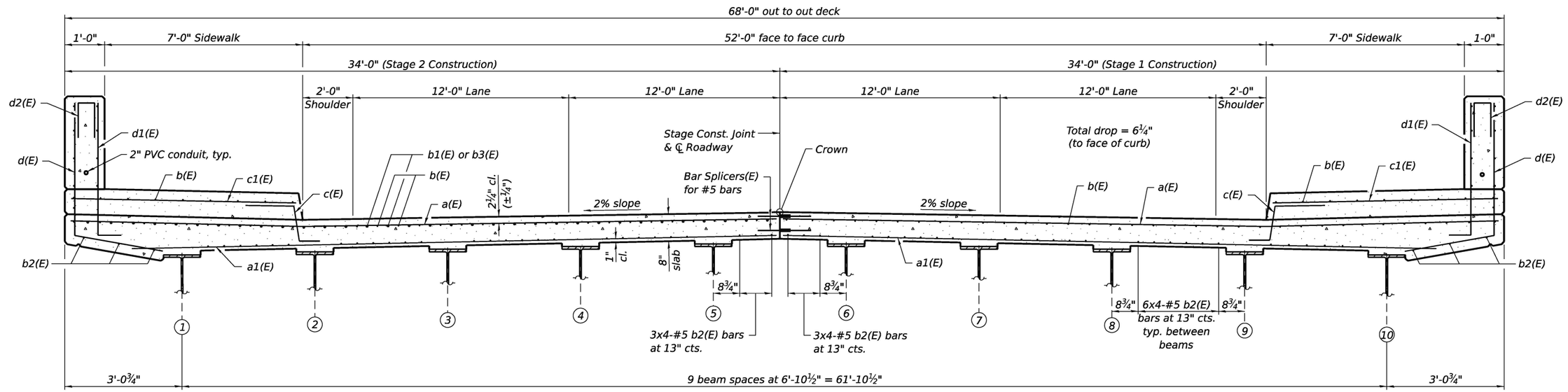

CROSS SECTION
(Looking North)
(Scuppers and shear studs not shown for clarity)

NEAR PIER NEAR MIDSPAN

MODEL: Br_Sheet_Consultant
FILE NAME: E:\2410-1\struct\Final Design\CADD (ORD)\CADD_Sheets\03220087-66M30-012-Super.dgn

LIN ENGINEERING, LTD. Consulting Engineers Springfield, Illinois	USER NAME = LIN03-PC	DESIGNED - CZ	REVISED -	STATE OF ILLINOIS DEPARTMENT OF TRANSPORTATION	SUPERSTRUCTURE STRUCTURE NO. 032-0087
		DRAWN - SJH	REVISED -		
	PLOT SCALE = $SCALE$	CHECKED - MTH	REVISED -		SHEET 12 OF 30 SHEETS
	PLOT DATE = 6/19/2026	CHECK DATE - 10/2025	REVISED -		

F.A.P. RTE.	SECTION	COUNTY	TOTAL SHEETS	SHEET NO.
326	(111HB1)ES	GRUNDY	137	102
		CONTRACT NO. 66M30		
		ILLINOIS	FED. AID PROJECT	

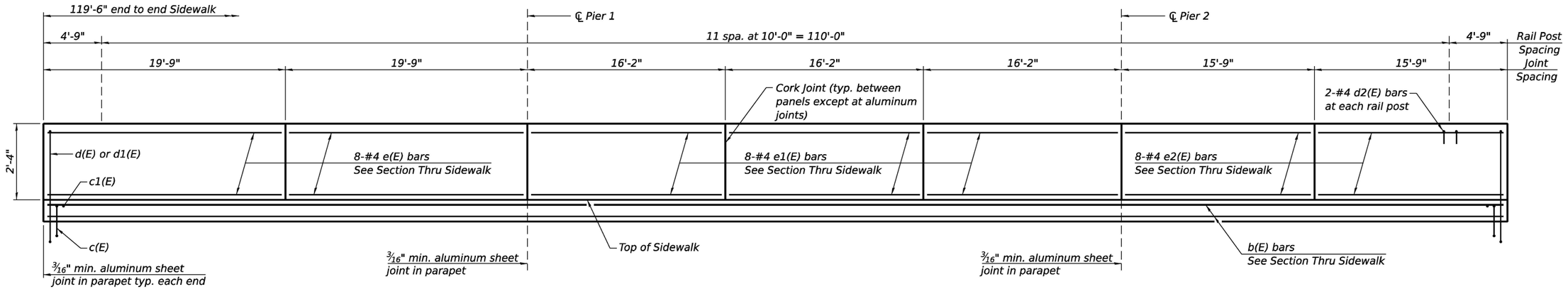

INSIDE ELEVATION OF SIDEWALK AND PARAPET

(Looking West at West Sidewalk; East Sidewalk mirror image)

MINIMUM BAR LAP

#5 bar = 3'-10"

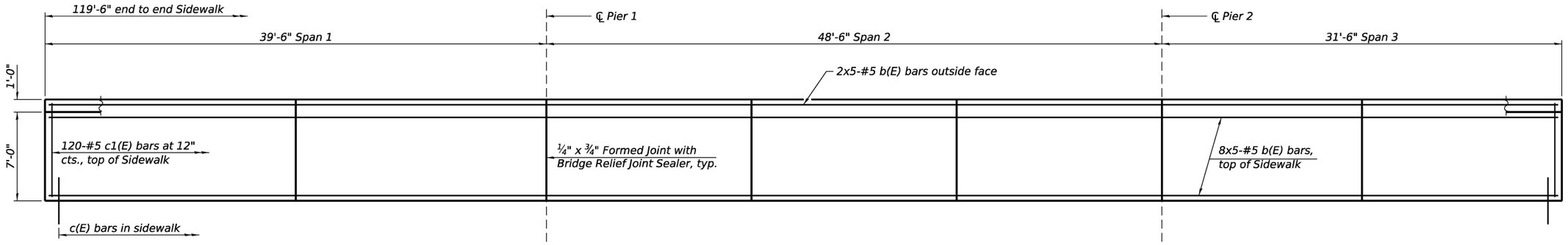

SIDEWALK PLAN

(West Sidewalk shown; East Sidewalk mirrored)

Notes:
See Sheet 14 of 30 for Section Thru Sidewalk.
Bars indicated thus 1 x 2-#4 etc. indicates 1 line of bars with 2 lengths per line.

MODEL: Br_Sheet_Consultant
FILE NAME: E:\2410-1\struct\Final Design\CADD (ORD)\CADD_Sheets\0320087-66M30-013-SuperDtls1.dgn

LIN ENGINEERING, LTD. Consulting Engineers Springfield, Illinois	USER NAME = LIN03-PC	DESIGNED - CZ	REVISED -	STATE OF ILLINOIS DEPARTMENT OF TRANSPORTATION	SUPERSTRUCTURE DETAILS STRUCTURE NO. 032-0087
		DRAWN - SJH	REVISED -		
	PLOT SCALE = $SCALE$	CHECKED - MTH	REVISED -		
	PLOT DATE = 6/4/2026	CHECK DATE - 10/2025	REVISED -		SHEET 13 OF 30 SHEETS

F.A.P. RTE.	SECTION	COUNTY	TOTAL SHEETS	SHEET NO.
326	(111HB1)ES	GRUNDY	137	103
		CONTRACT NO. 66M30		
	ILLINOIS	FED. AID PROJECT		

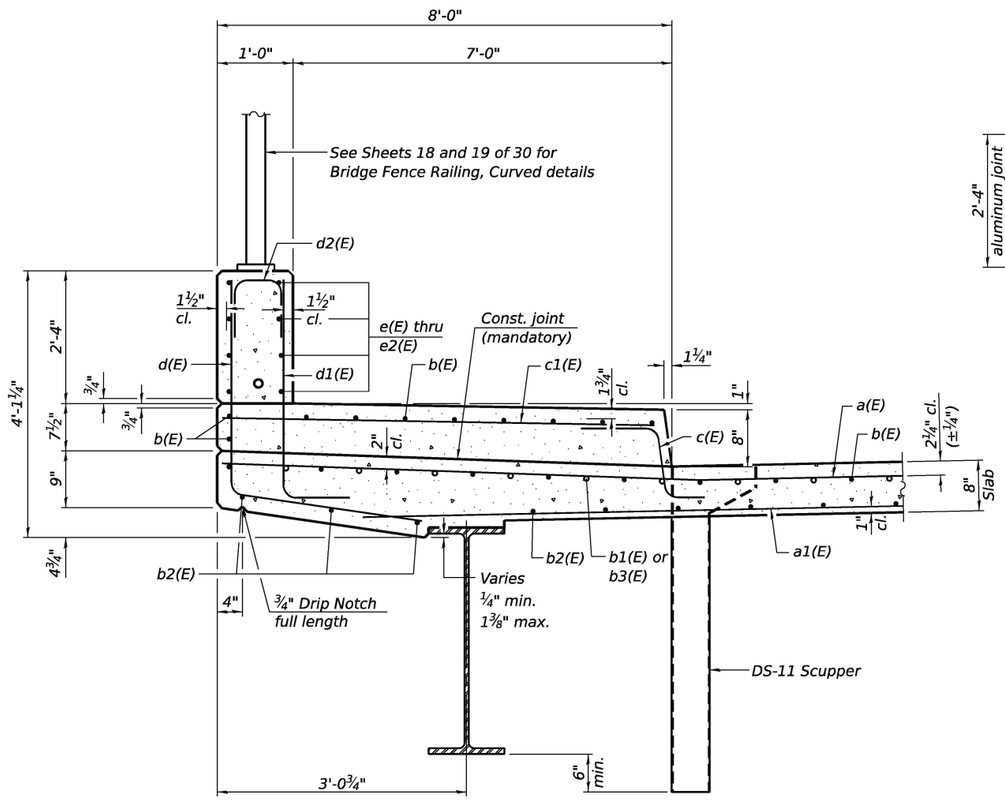

SECTION THRU SIDEWALK

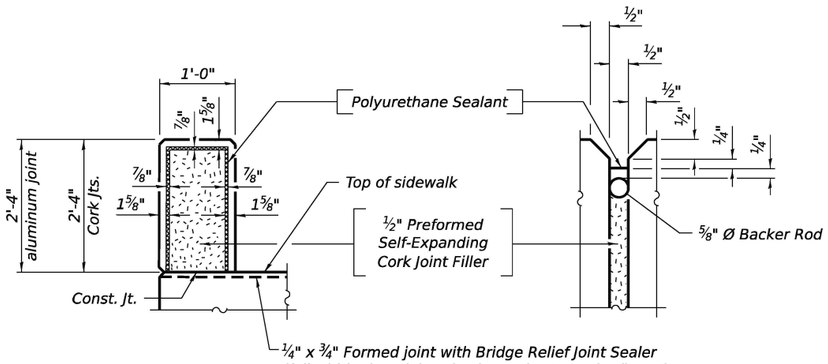

PARAPET JOINT DETAILS

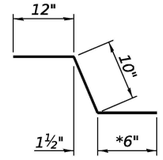

BAR c(E)

* In lieu of bottom leg, c(E) bars may be drilled and set according to Article 509.06 of the Standard Specifications. Drilled holes shall be roughened or scored per manufacturer's recommendations. Maximum depth of drilled hole shall not exceed 6".
Contractor shall take all necessary precautions to prevent drilled hole interference with deck reinforcement bars. Locate longitudinal bars to miss drilled locations. Locate drilled holes to miss transverse bars in deck.

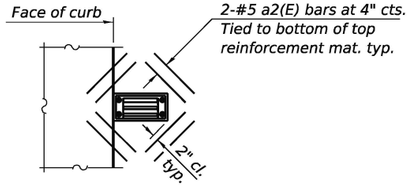

PLAN AT SCUPPER

Note:
Cut longitudinal reinforcement to clear drainage scuppers.

SUPERSTRUCTURE BILL OF MATERIAL

Bar	No.	Size	Length	Shape
a(E)	466	#5	33'-8"	
a1(E)	270	#5	32'-5"	
a2(E)	32	#5	1'-6"	
b(E)	440	#5	27'-0"	
b1(E)	68	#6	23'-10"	
b2(E)	240	#5	32'-9"	
b3(E)	68	#6	22'-10"	
c(E)	240	#5	2'-4"	
c1(E)	240	#5	7'-7"	
d(E)	240	#4	5'-8"	
d1(E)	240	#6	4'-4"	
d2(E)	48	#4	2'-2"	
e(E)	32	#4	19'-5"	
e1(E)	48	#4	15'-10"	
e2(E)	32	#4	15'-5"	
m10(E)	16	#6	32'-6"	
m11(E)	48	#6	6'-7"	
m12(E)	12	#6	1'-7"	
m13(E)	12	#6	3'-2"	
m14(E)	8	#4	32'-6"	
s10(E)	134	#5	6'-8"	
s11(E)	134	#5	8'-2"	
u10(E)	134	#5	3'-10"	
v100(E)	136	#5	3'-1"	
Reinforcement Bars, Epoxy Coated			Lbs.	61,740
Concrete Superstructure			Cu. Yds.	326.9

Notes:
The 3/16" min. aluminum sheet shall be ASTM B 209 alloy 3003-H14 and coated with 5 mils of either bitumen paint or epoxy paint to minimize reaction with wet concrete. Cost included with Concrete Superstructure.
The Polyurethane Sealant shall be according to Article 1050.04 of the Std. Spec. and the color shall be gray.
Bar terminators, paid for separately. See Total Bill of Material.
See Sheet 1 of 30 for Drainage Scupper locations.

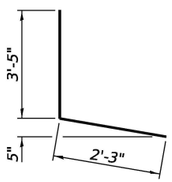

BAR d(E)

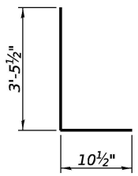

BAR d1(E)

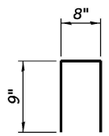

BAR d2(E)

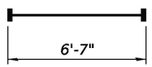

BAR m11(E)
(Headed. 96-#6 Bar terminators)



BAR m12(E)
(Headed. 12-#6 Bar terminators)

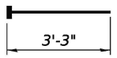

BAR m13(E)
(Headed. 12-#6 Bar terminators)

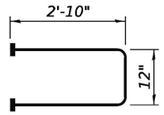

BAR s10(E)
(Headed. 268-#5 Bar terminators)

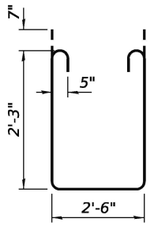

BAR s11(E)

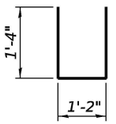

BAR u10(E)

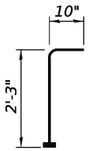

BAR v100(E)
(Headed. 136-#5 Bar terminators)

MODEL: Br_Sheet_Consultant
FILE NAME: E:\2410-1\struct\Final Design\CADD (ORD)\CADD_Sheets\0320087-66M30-014-SuperDtls2.dgn

LIN ENGINEERING, LTD.
Consulting Engineers
Springfield, Illinois

USER NAME = LIN03-PC	DESIGNED - CZ	REVISED -	
	DRAWN - SJH	REVISED -	
PLOT SCALE = $SCALE$	CHECKED - MTH	REVISED -	
PLOT DATE = 6/19/2026	CHECK DATE - 10/2025	REVISED -	

STATE OF ILLINOIS
DEPARTMENT OF TRANSPORTATION

SUPERSTRUCTURE DETAILS
STRUCTURE NO. 032-0087
SHEET 14 OF 30 SHEETS

F.A.P. RTE.	SECTION	COUNTY	TOTAL SHEETS	SHEET NO.
326	(111HB1)ES	GRUNDY	137	104
		CONTRACT NO. 66M30		
	ILLINOIS	FED. AID PROJECT		

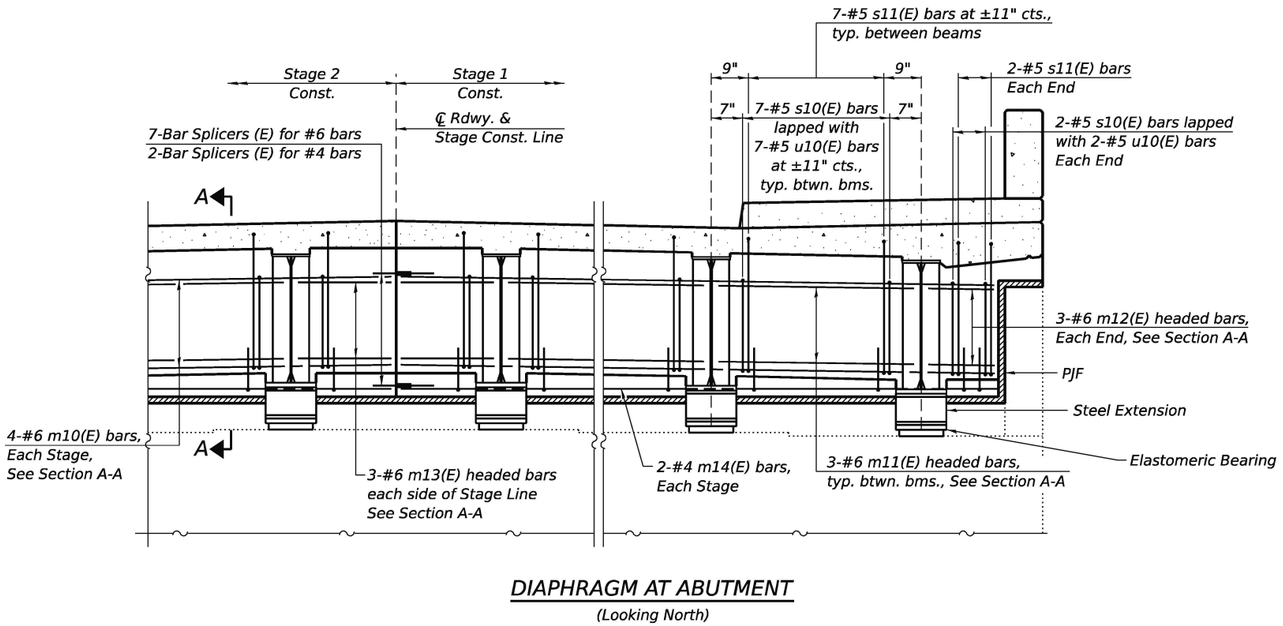

DIAPHRAGM AT ABUTMENT

(Looking North)

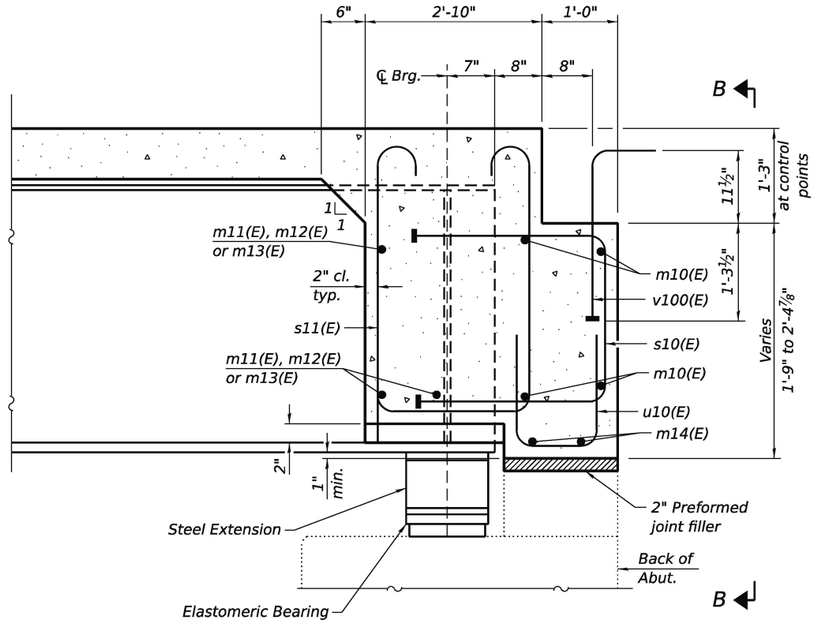

SECTION A-A

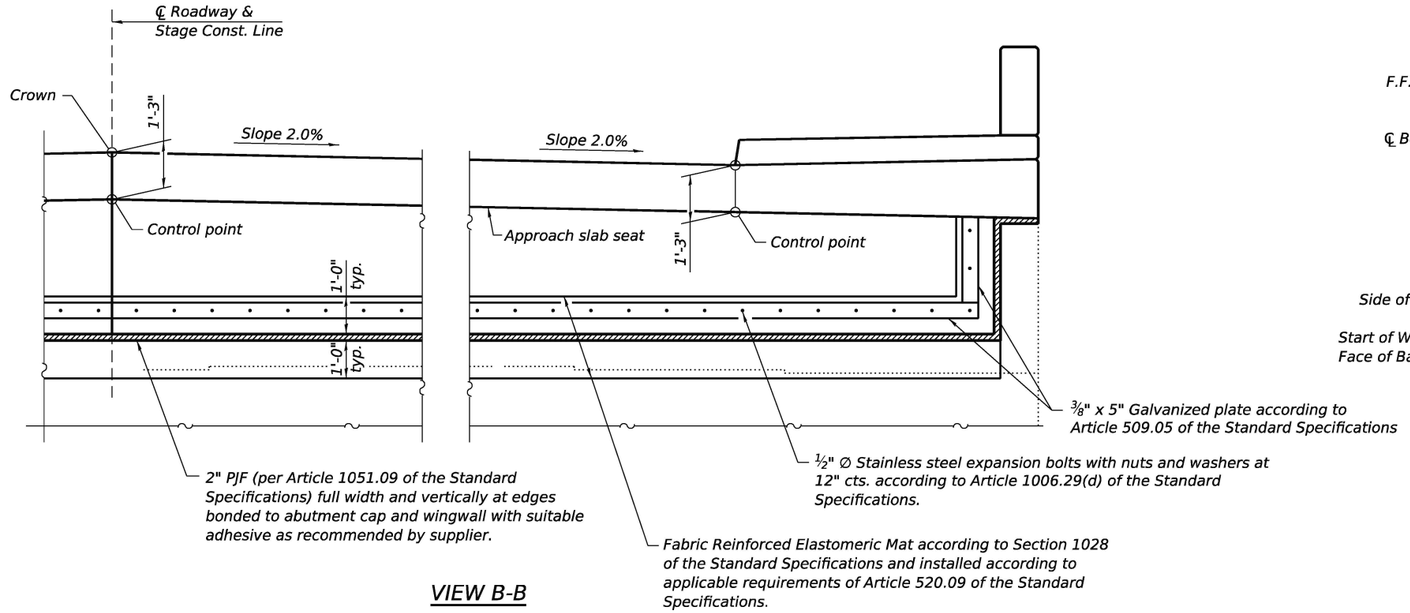

VIEW B-B

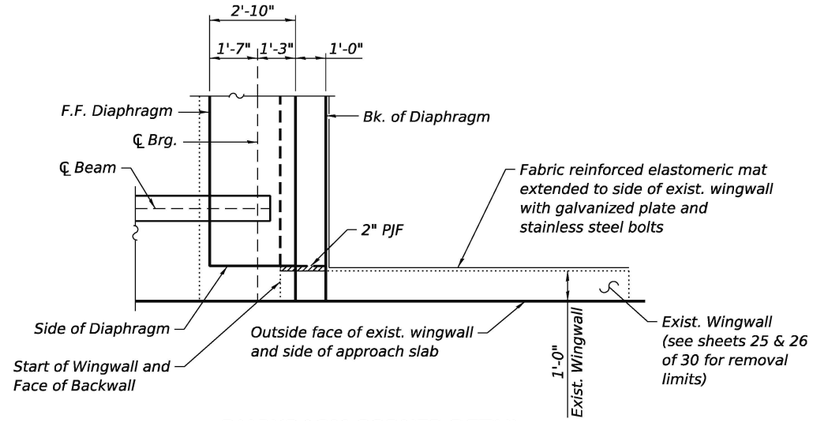

DIAPHRAGM CORNER DETAIL

(Typical each end both sides)
(Galvanized plate not shown for clarity)

Notes:

See sheet 14 of 30 for superstructure details and Bill of Material.

See sheet 2 of 30 for drainage details.

The approach slab seat shall have a constant slope determined from the control points shown.

Cost of fabric reinforced elastomeric mat, galvanized plate, stainless steel expansion bolts with nuts and washers and installation are included in the cost of Concrete Superstructure.

MODEL: Br_Sheet_Consultant
FILE NAME: E:\2410-1\struct\Final Design\CADD (ORD)\CADD_Sheets\0320087-66M30-015-DiaphragmDtls.dgn

LIN ENGINEERING,LTD.
Consulting Engineers
Springfield, Illinois

USER NAME = Mike Haley	DESIGNED - CZ	REVISED -	
	DRAWN - SJH	REVISED -	
PLOT SCALE = $SCALE$	CHECKED - MTH	REVISED -	
PLOT DATE = 5/19/2026	CHECK DATE - 10/2025	REVISED -	

STATE OF ILLINOIS
DEPARTMENT OF TRANSPORTATION

DIAPHRAGM DETAILS
STRUCTURE NO. 032-0087
SHEET 15 OF 30 SHEETS

F.A.P. RTE.	SECTION	COUNTY	TOTAL SHEETS	SHEET NO.
326	(111HB1)ES	GRUNDY	137	105
		CONTRACT NO. 66M30		
	ILLINOIS FED. AID PROJECT			

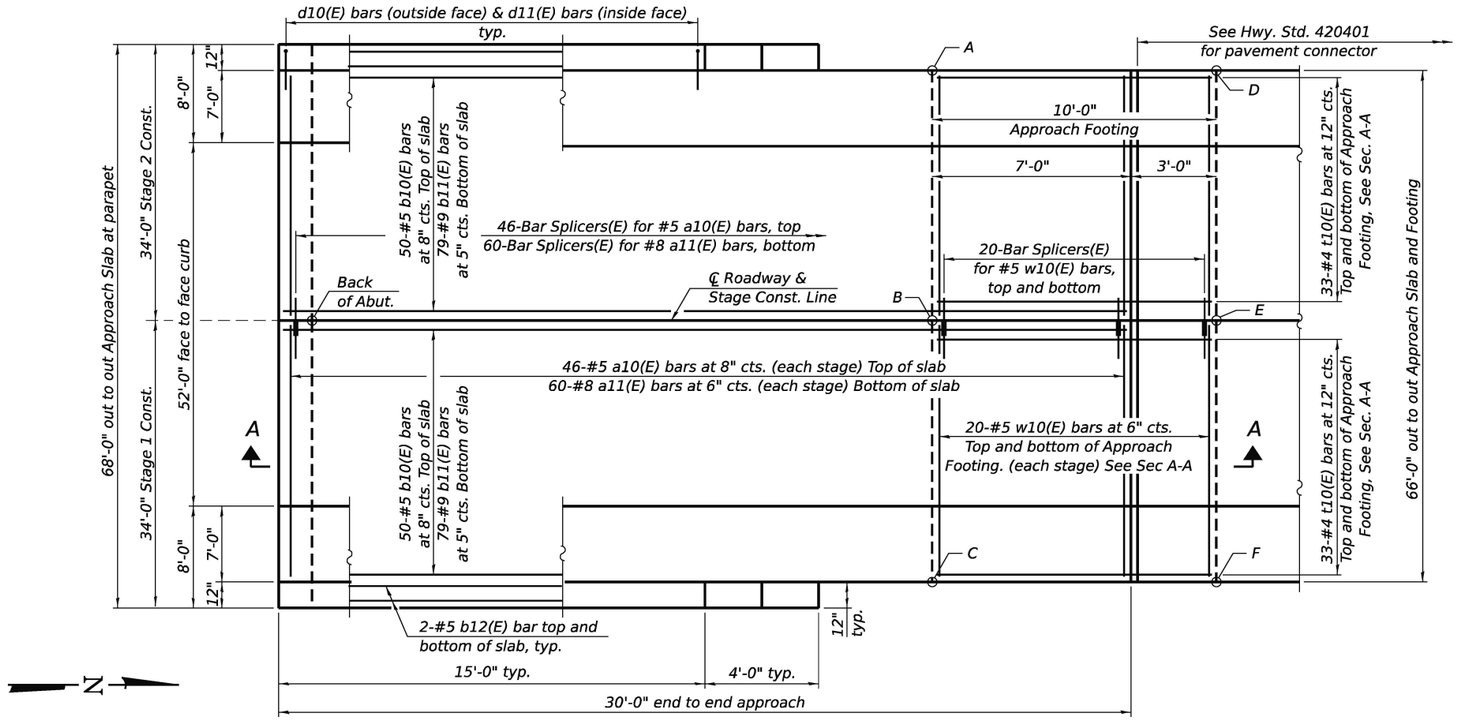

PLAN

(North approach slab shown; South approach slab similar by 180° rotation)

TOP AND BOTTOM ELEVATIONS FOR APPROACH FOOTING

South Approach		
Point/Location	Top	Bottom
A - Sta. 38+13.25; 33.00' Rt.	573.96	573.12
B - Sta. 38+13.25; 0.00' Lt.	574.62	573.78
C - Sta. 38+13.25; 33.00' Lt.	573.96	573.12
D - Sta. 38+03.25; 33.00' Rt.	574.32	573.49
E - Sta. 38+03.25; 0.00' Lt.	574.98	574.15
F - Sta. 38+03.25; 33.00' Lt.	574.32	573.49
North Approach		
Point/Location	Top	Bottom
A - Sta. 39+78.75; 33.00' Lt.	567.92	567.08
B - Sta. 39+78.75; 0.00' Lt.	568.58	567.74
C - Sta. 39+78.75; 33.00' Rt.	567.92	567.08
D - Sta. 39+88.75; 33.00' Lt.	567.55	566.72
E - Sta. 39+88.75; 0.00' Lt.	568.21	567.38
F - Sta. 39+88.75; 33.00' Rt.	567.55	566.72

Note:
See Sheet 17 of 30 for Section A-A

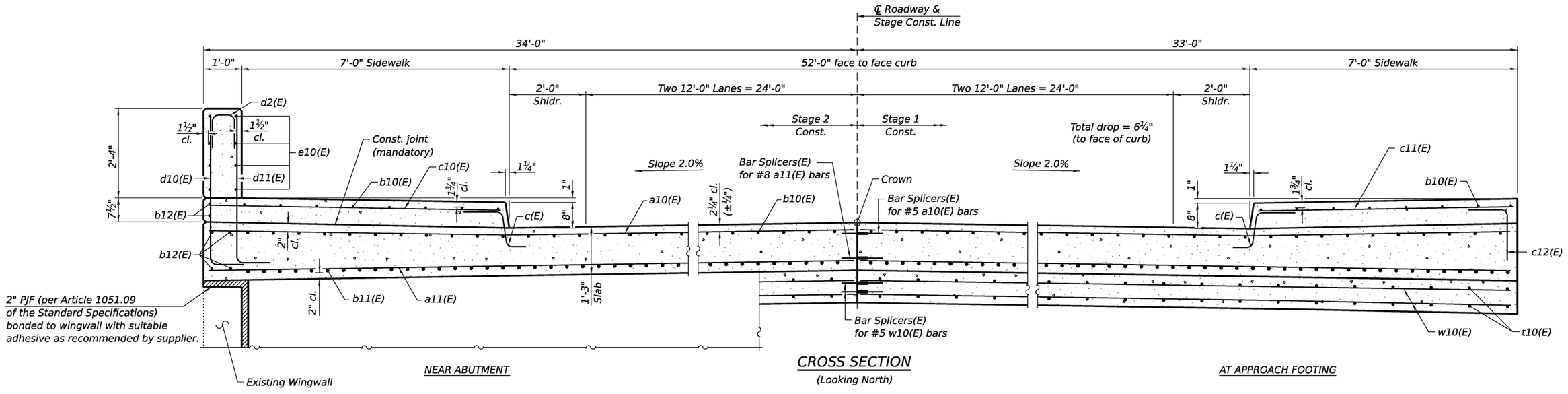

NEAR ABUTMENT

CROSS SECTION

(Looking North)

AT APPROACH FOOTING

MODEL: Br_Sheet_Consultant
FILE NAME: E:\2410-1\struct\Final Design\CADD (ORD)\CADD_Sheets\0320087-66M30-016-AppSlabDtls1.dgn

LIN ENGINEERING, LTD. Consulting Engineers Springfield, Illinois	USER NAME = LIN03-PC	DESIGNED - CZ	REVISED -	STATE OF ILLINOIS DEPARTMENT OF TRANSPORTATION	BRIDGE APPROACH SLAB DETAILS STRUCTURE NO. 032-0087
		DRAWN - SJH	REVISED -		
	PLOT SCALE = $SCALE$	CHECKED - MTH	REVISED -		SHEET 16 OF 30 SHEETS
	PLOT DATE = 6/19/2026	CHECK DATE - 10/2025	REVISED -		

F.A.P. RTE.	SECTION	COUNTY	TOTAL SHEETS	SHEET NO.
326	(111HB1)ES	GRUNDY	137	106
		CONTRACT NO. 66M30		
		ILLINOIS	FED. AID PROJECT	

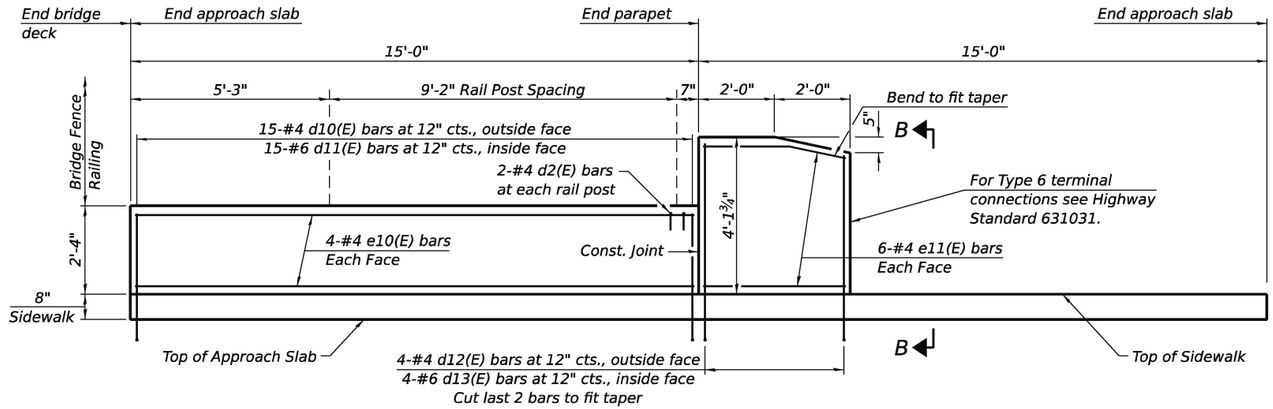

INSIDE ELEVATION OF PARAPET AND CURB

Notes:

The joint opening shall be adjusted for temperature per Article 520.04 of the Standard Specifications. However, since this detail is for jointless structures, the length of bridge used to calculate the adjustment shall be equal to half the total bridge length plus the length of the bridge approach slab.

Parapet and sidewalk concrete shall be paid for as Concrete Superstructure.

Approach slab shall be paid for as Concrete Superstructure (Approach Slab).

Approach footing concrete shall be paid for as Concrete Structures.

The approach footing maximum applied service bearing pressure (Qmax) = 2.0 ksf.

Cost of excavation for approach footing included with Concrete Structures.

For Granular Backfill for Structures and drainage treatment details, see sheet 2 of 30.

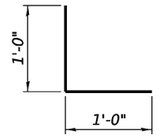

BAR c12(E)

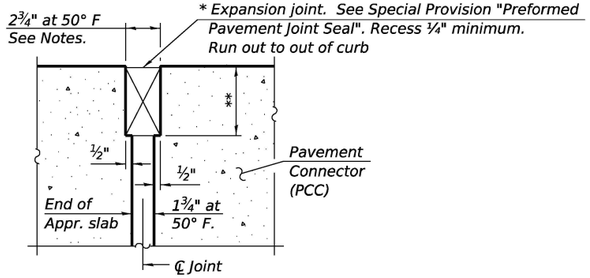

DETAIL A

* Cost included with Concrete Superstructure (Approach Slab).

** Per manufacturer recommendations

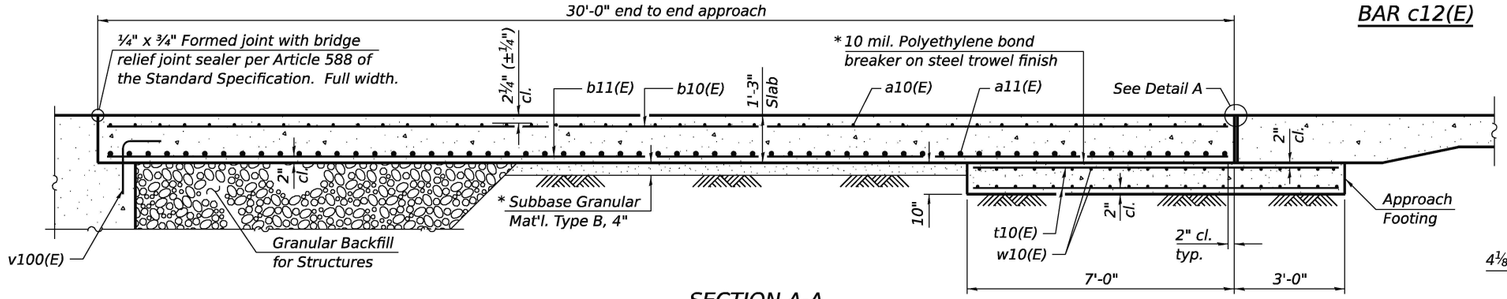

SECTION A-A

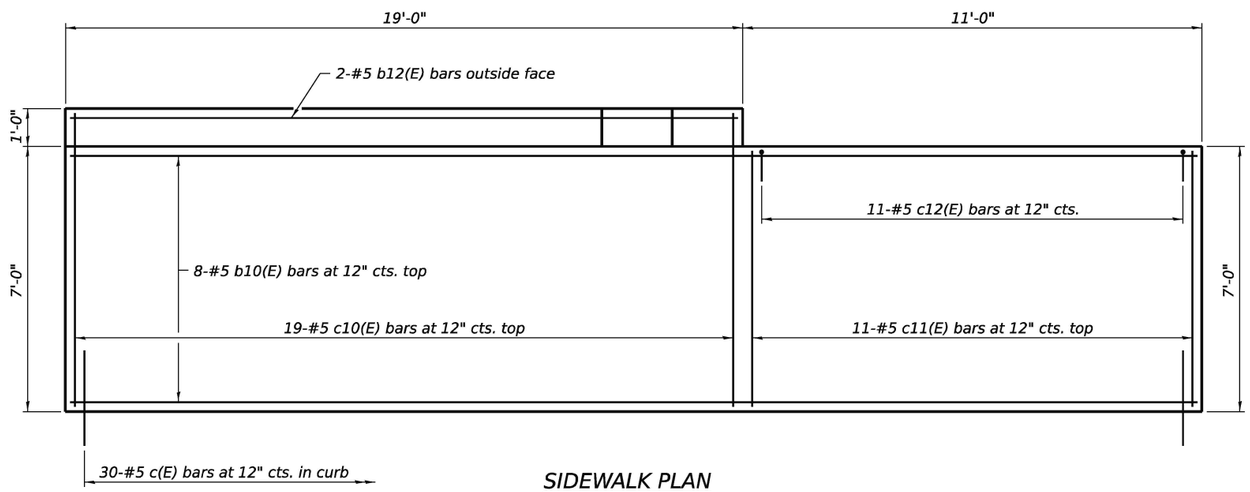

SIDEWALK PLAN

(Showing Sidewalk Reinforcement)

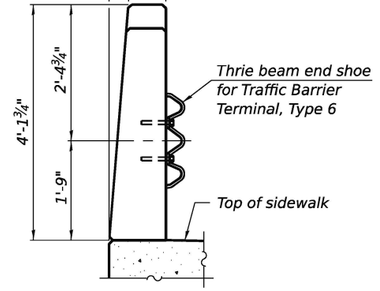

SECTION B-B

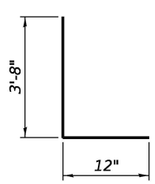

BARS d10(E) & d11(E)

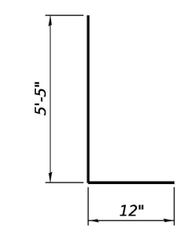

BARS d12(E) & d13(E)

TWO APPROACHES BILL OF MATERIAL

Bar	No.	Size	Length	Shape
a10(E)	184	#5	33'-8"	———
a11(E)	240	#8	33'-8"	———
b10(E)	200	#5	29'-8"	———
b11(E)	316	#9	29'-8"	———
b12(E)	24	#5	18'-8"	———
c(E)	120	#5	2'-4"	⌝
c10(E)	76	#5	7'-8"	———
c11(E)	44	#5	6'-8"	———
c12(E)	44	#5	2'-0"	⌞
d2(E)	16	#4	2'-2"	⊓
d10(E)	60	#4	4'-8"	⌞
d11(E)	60	#6	4'-8"	⌞
d12(E)	16	#4	6'-5"	⌞
d13(E)	16	#6	6'-5"	⌞
e10(E)	32	#4	14'-8"	———
e11(E)	48	#4	3'-8"	———
t10(E)	264	#4	9'-8"	———
w10(E)	160	#5	32'-8"	———
Concrete Superstructure			Cu. Yd.	29.4
Concrete Superstructure (Approach Slab)			Cu. Yd.	191.6
Concrete Structures			Cu. Yd.	40.8
Reinforcement Bars, Epoxy Coated			Pound	76,310

MODEL: Br_Sheet_Consultant
FILE NAME: E:\2410-1\struct\Final Design\CADD (ORD)\CADD_Sheets\0320087-66M30-017-AppSlabDtls2.dgn

LIN ENGINEERING,LTD.
Consulting Engineers
Springfield, Illinois

USER NAME = LIN03-PC	DESIGNED - CZ	REVISED -	
	DRAWN - SJH	REVISED -	
PLOT SCALE = $SCALE$	CHECKED - MTH	REVISED -	
PLOT DATE = 6/20/2026	CHECK DATE - 10/2025	REVISED -	

STATE OF ILLINOIS
DEPARTMENT OF TRANSPORTATION

BRIDGE APPROACH SLAB DETAILS
STRUCTURE NO. 032-0087
SHEET 17 OF 30 SHEETS

F.A.P. RTE.	SECTION	COUNTY	TOTAL SHEETS	SHEET NO.
326	(111HB1)ES	GRUNDY	137	107
		CONTRACT NO. 66M30		
	ILLINOIS FED. AID PROJECT			

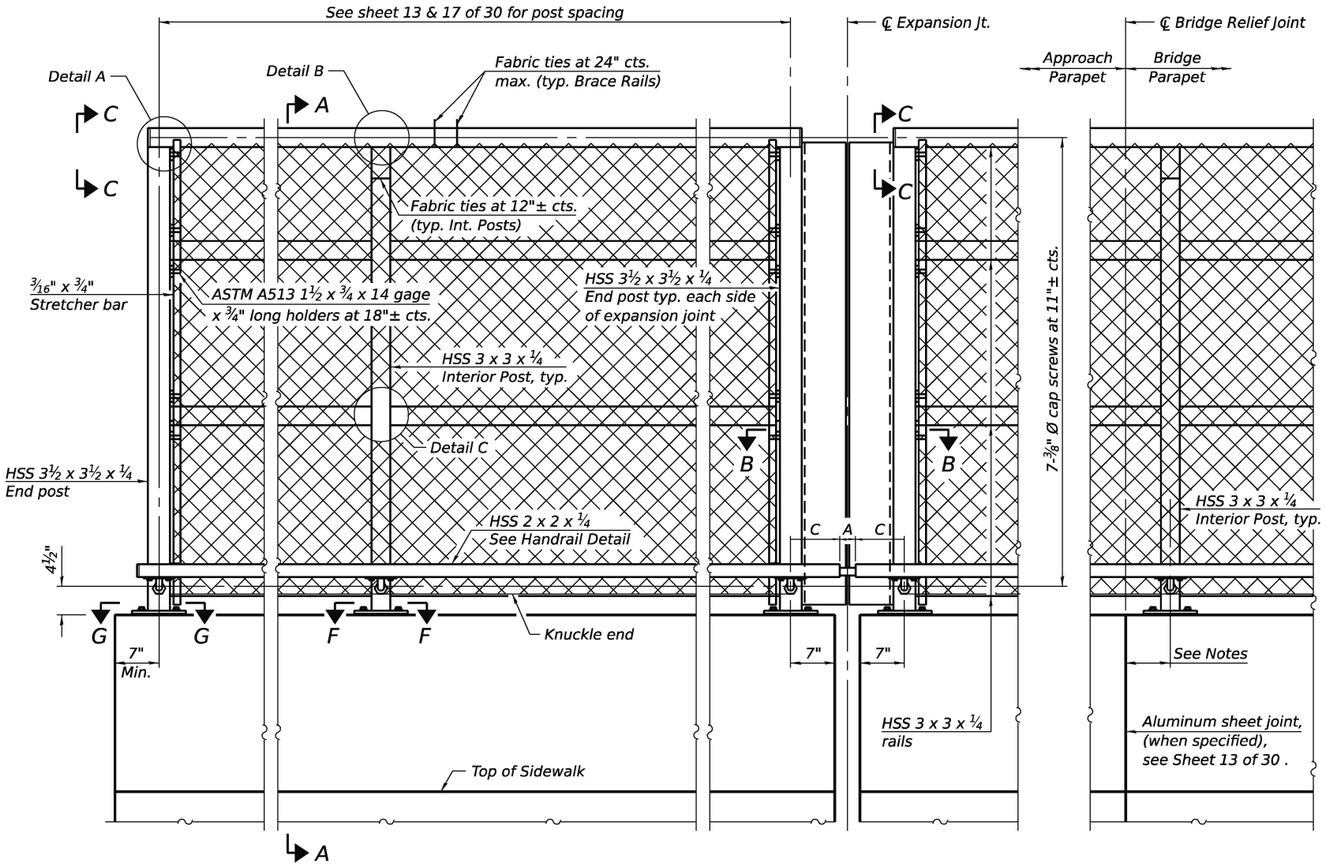

(e.g. at Bridge Relief Joints)

ELEVATION BRIDGE FENCE RAILING, CURVED

(Inside face)

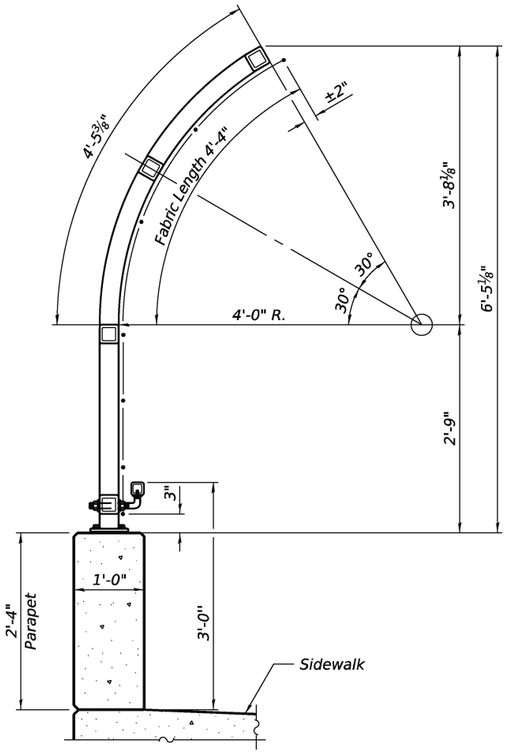

SECTION A-A

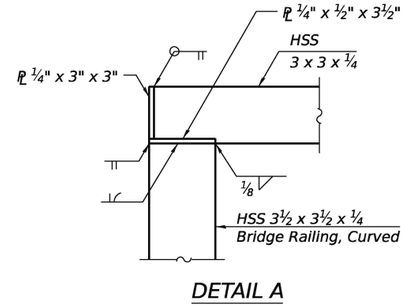

DETAIL A

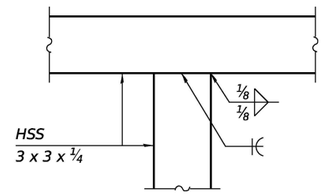

DETAIL B

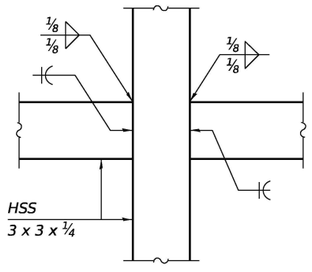

DETAIL C

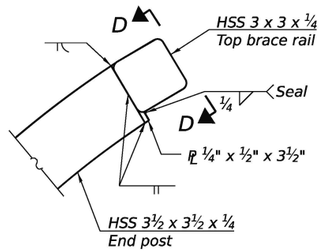

VIEW C-C

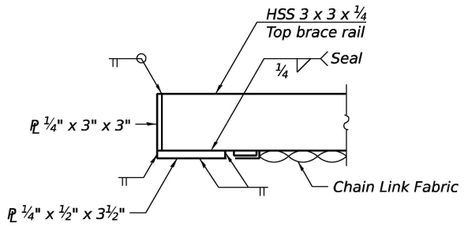

VIEW D-D

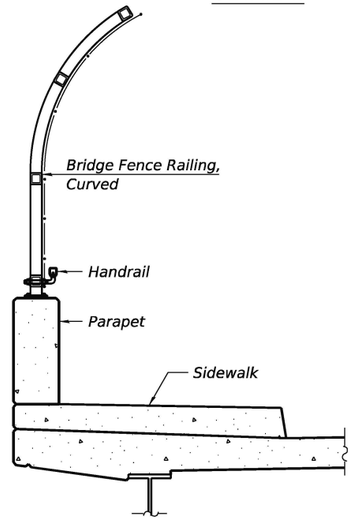

SECTION THRU DECK

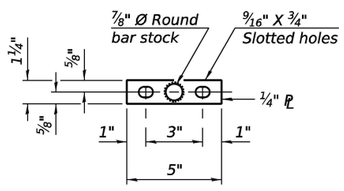

VIEW E-E

(Handrail)

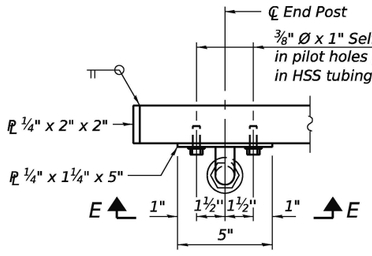

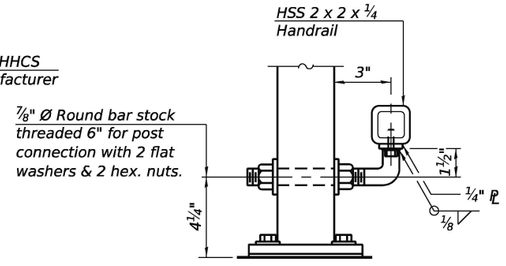

HANDRAIL DETAIL

RAILING CRITERIA

NCHRP 350 Test Level	4
Railing Weight (plf)	70
Max Post Spacing	10'-0''

R-32

4-4-2025

(Sheet 1 of 2)

MODEL: Br_Sheet_Consultant
FILE NAME: E:\2410-1\struct\Final Design\CADD (ORD)\CADD_Sheets\0320087-66M30-018-FenceRailing1.dgn

LIN ENGINEERING, LTD.
Consulting Engineers
Springfield, Illinois

USER NAME = Mike Haley	DESIGNED - CZ	REVISED -	STATE OF ILLINOIS DEPARTMENT OF TRANSPORTATION	BRIDGE FENCE RAILING CURVED STRUCTURE NO. 032-0087
	DRAWN - SJH	REVISED -		
PLOT SCALE = $SCALE$	CHECKED - MTH	REVISED -		SHEET 18 OF 30 SHEETS
PLOT DATE = 5/19/2026	CHECK DATE - 10/2025	REVISED -		

F.A.P. RTE.	SECTION	COUNTY	TOTAL SHEETS	SHEET NO.
326	(111HB1)ES	GRUNDY	137	108
		CONTRACT NO. 66M30		
		ILLINOIS	FED. AID PROJECT	

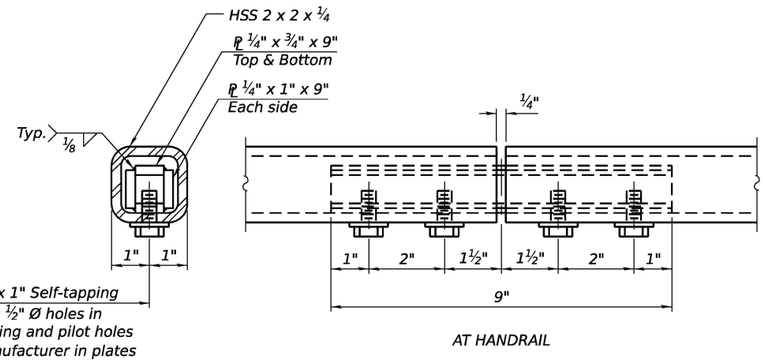

AT HANDRAIL

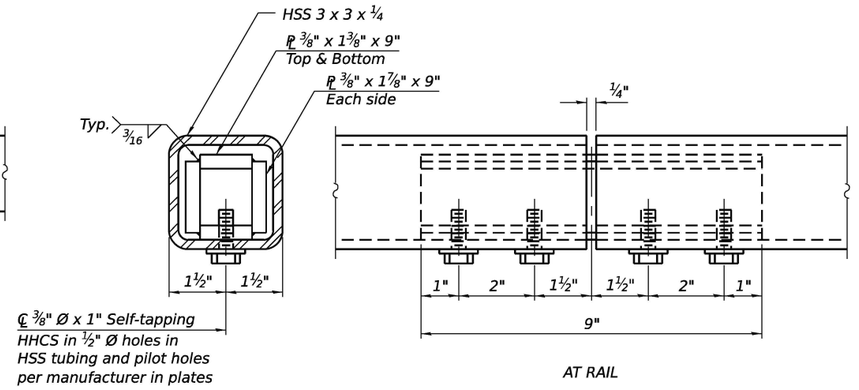

AT RAIL

MATERIAL SPLICE

Notes:

Place reinforcement bars to miss anchor rod locations.

CVN testing is not required for the HSS tubing used in the Bridge Fence Railing, Curved.

All HSS tubing used for the Handrail shall be CVN tested according to Article 1006.34(b) of the Standard Specifications.

All heavy hex nuts shall be according to ASTM A 563 grade DH.

All fully threaded anchor rods shall be ASTM F1554 grade 105.

The post base plate shall be fastened to the curb snug tight and given an additional ⅛" turn.

Contractor shall offset posts to miss any aluminum sheet or cork joints for sufficient installation of the anchorage assembly.

Rail splice inserts may be built out of bent plates of the same thicknesses and outside geometry limits as the 4 plate rail splice inserts shown.

All steel rail elements shall be galvanized according to Article 509.05 of the Standard Specifications.

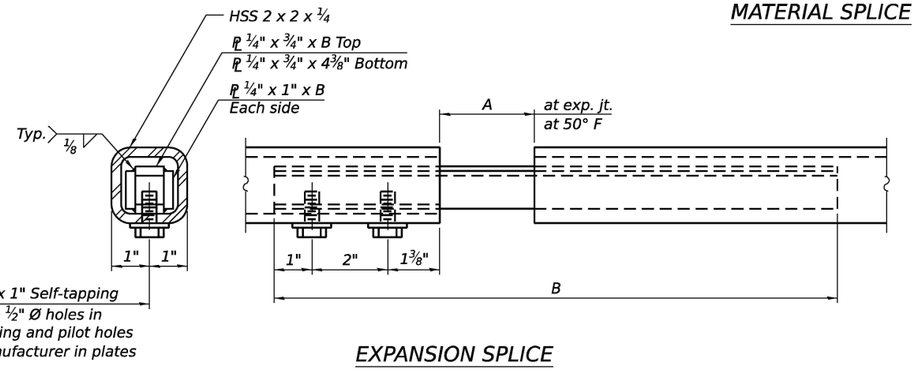

EXPANSION SPLICE

(Weld bottom plate on bolt side)

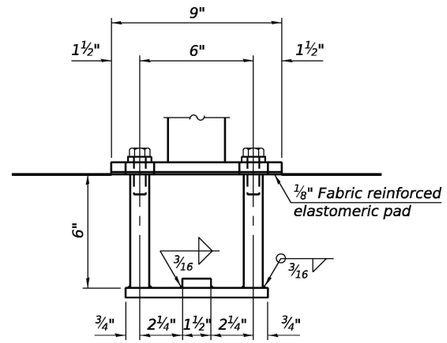

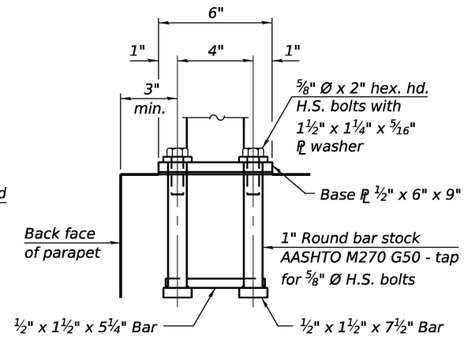

ANCHORAGE ASSEMBLY

The Bridge Fence Railing, Curved fasteners for end posts near expansion joints may need to be installed prior to installing the bent plates.

In lieu of the cast-in-place anchor device shown, the Contractor has the option of drilling and setting ⅝" Ø fully threaded anchor rods with the same plate washers as specified above and heavy hex lock nuts according to Article 509.06 of the Standard Specifications. Embedment shall be according to the manufacturer's specifications.

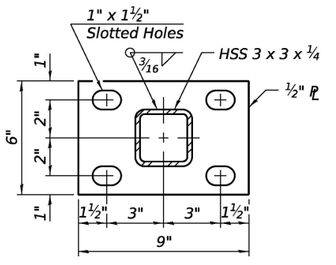

SECTION F-F

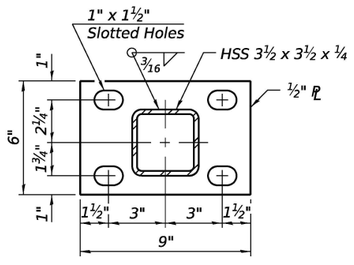

SECTION G-G

Location	T	A	B	C	D
Over Strip Seal Jt.	≤4"	2½"	1'-5⅞"	6¼"	3¾"
Over Finger or Modular Jt.	≤9½"	5½"	1'-11⅝"	9¾"	6"
Over Finger or Modular Jt.	≤15"	8¼"	2'-5⅛"	13⅞"	8¾"
At Light Poles	8"	NA	NA	11¾"	10"
At Bridge Relief Joints	NA - Material Splices Per Fabricator				

T= ; total movement based on total temperature range from -20°F to 120°F along centerline of roadway at expansion joint.
OR
8" hand-hole access for maintenance of light poles (when present; replace splice with 8" gap)

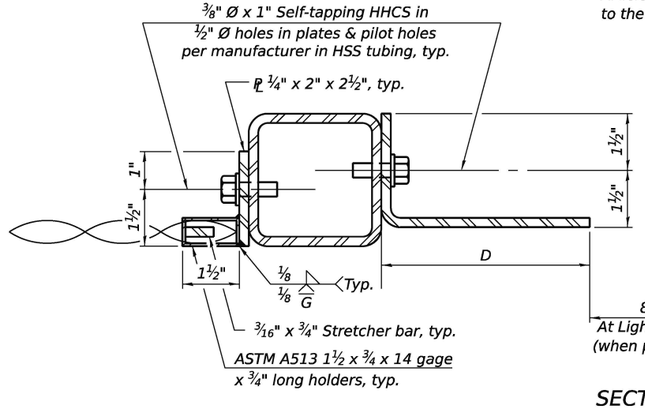

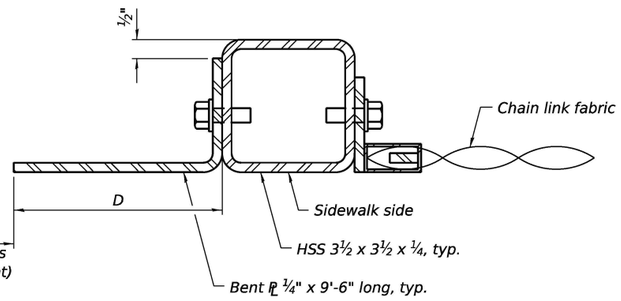

SECTION B-B

BILL OF MATERIAL

Item	Unit	Quantity
Bridge Fence Railing, Curved	Foot	297

MODEL: Br_Sheet_Consultant
FILE NAME: E:\2410-1\struct\Final Design\CADD (ORD)\CADD_Sheets\0320087-66M30-019-FenceRailing2.dgn

LIN ENGINEERING, LTD.
Consulting Engineers
Springfield, Illinois

USER NAME = Mike Haley	DESIGNED - CZ	REVISED -	
	DRAWN - SJH	REVISED -	
PLOT SCALE = $SCALE$	CHECKED - MTH	REVISED -	
PLOT DATE = 5/19/2026	CHECK DATE - 10/2025	REVISED -	

STATE OF ILLINOIS
DEPARTMENT OF TRANSPORTATION

BRIDGE FENCE RAILING CURVED
STRUCTURE NO. 032-0087
SHEET 19 OF 30 SHEETS

F.A.P. RTE.	SECTION	COUNTY	TOTAL SHEETS	SHEET NO.
326	(111HB1)ES	GRUNDY	137	109
		CONTRACT NO. 66M30		
		ILLINOIS	FED. AID PROJECT	

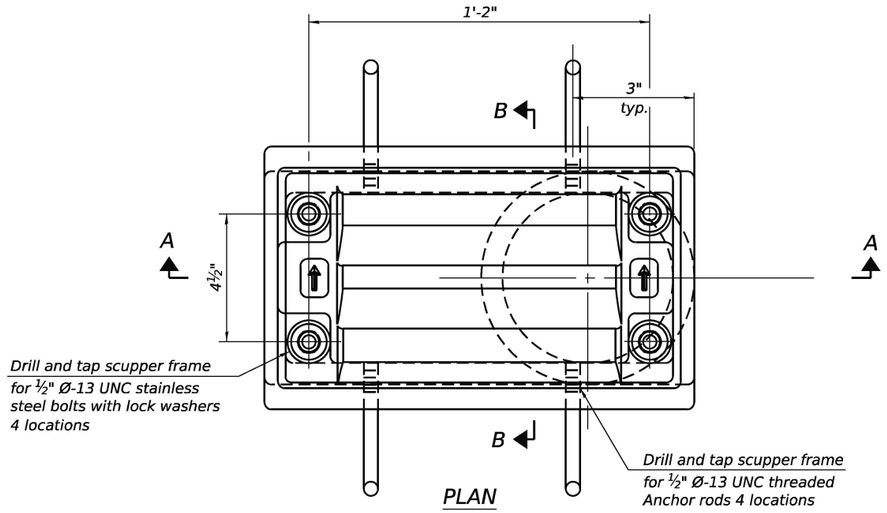

PLAN

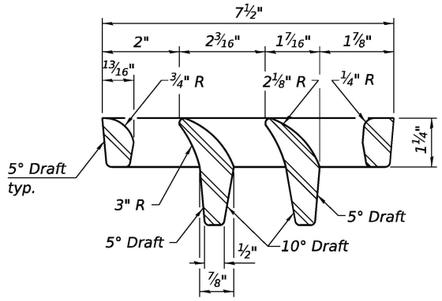

VANE GRATE DETAIL

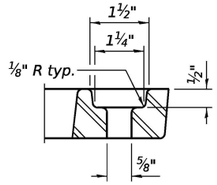

GRATE BOLT HOLE DETAIL

Notes:

All cast iron parts shall be gray iron conforming to the requirements of AASHTO M105, Class 35B and AASHTO M306.

Bolts, anchor rods, nuts and washers shall be according to ASTM A307 and shall be galvanized according to AASHTO M232. As an alternate stainless steel may be used.

Stainless steel hardware shall be according to Article 1006.29(d) of the Standard Specifications.

Structural steel weldments of equal sections and of the same configuration may be substituted for the cast iron scupper frames and downspouts; however, the scupper grates shall remain cast iron. Fillet or full penetration welds shall be used for the weldments. Details shall be submitted to the Engineer for approval.

Structural steel scupper frames and downspouts, when utilized, shall be galvanized according to AASHTO M111.

As an alternate, fiberglass may be used for downspouts according to ASTM D2996 with a short-time rupture strength hoop tensile stress of 30,000 psi min. in lieu of the cast iron or structural steel.

Exterior surfaces of downspouts and exterior exposed surfaces of the scupper frame below deck shall be painted according to Article 506 with the finish coat as specified. The exterior surfaces shall be cleaned according to the Society of Protective Coating's Spec. SS PC-SP1 prior to painting.

The Contractor shall take appropriate measures to assure that Protective Coat is not applied to the scupper.

Cost of the grate, frame, downspout, anchor rods, nuts and washers including complete installation of the scupper shall be paid for at the contract unit price for Drainage Scuppers, DS-11.

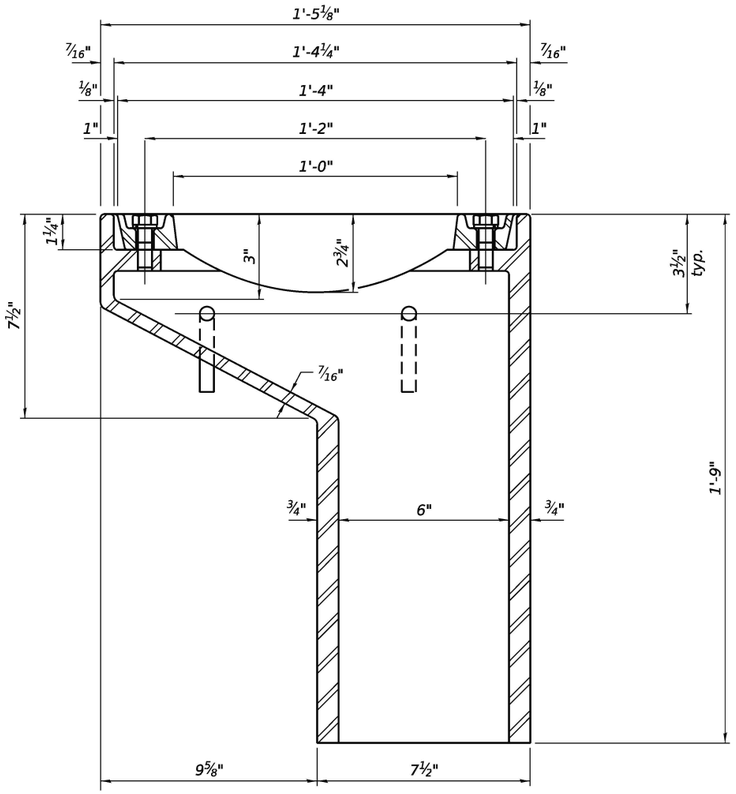

SECTION A-A

See sheet 14 of 30 for scupper location relative to parapet.

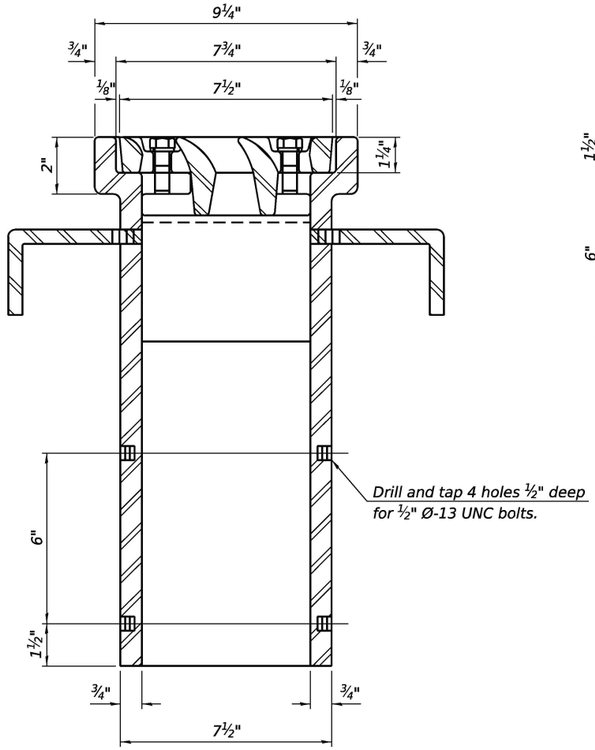

SECTION B-B

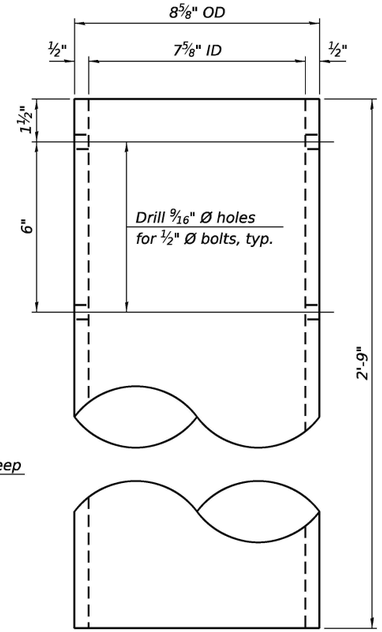

DOWNSPOUT

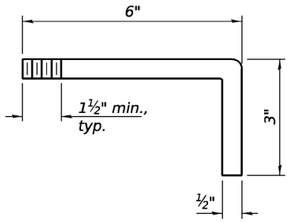

ANCHOR ROD DETAIL

BILL OF MATERIAL

Item	Unit	Quantity
Drainage Scuppers, DS-11	Each	4

DS-11 4-4-2025

LIN ENGINEERING, LTD.
Consulting Engineers
Springfield, Illinois

USER NAME = LIN03-PC	DESIGNED - CZ	REVISED -	
	DRAWN - SJH	REVISED -	
PLOT SCALE = $SCALE$	CHECKED - MTH	REVISED -	
PLOT DATE = 6/20/2026	CHECK DATE - 10/2025	REVISED -	

STATE OF ILLINOIS
DEPARTMENT OF TRANSPORTATION

DRAINAGE SCUPPERS DS-11
STRUCTURE NO. 032-0087
SHEET 20 OF 30 SHEETS

F.A.P. RTE.	SECTION	COUNTY	TOTAL SHEETS	SHEET NO.
326	(111HB1)ES	GRUNDY	137	110
		CONTRACT NO. 66M30		
		ILLINOIS	FED. AID PROJECT	

MODEL: Br_Sheet_Consultant
FILE NAME: E:\2410-1\struct\Final Design\CADD (ORD)\CADD_Sheets\0320087-66M30-020-DS11Scupper.dgn

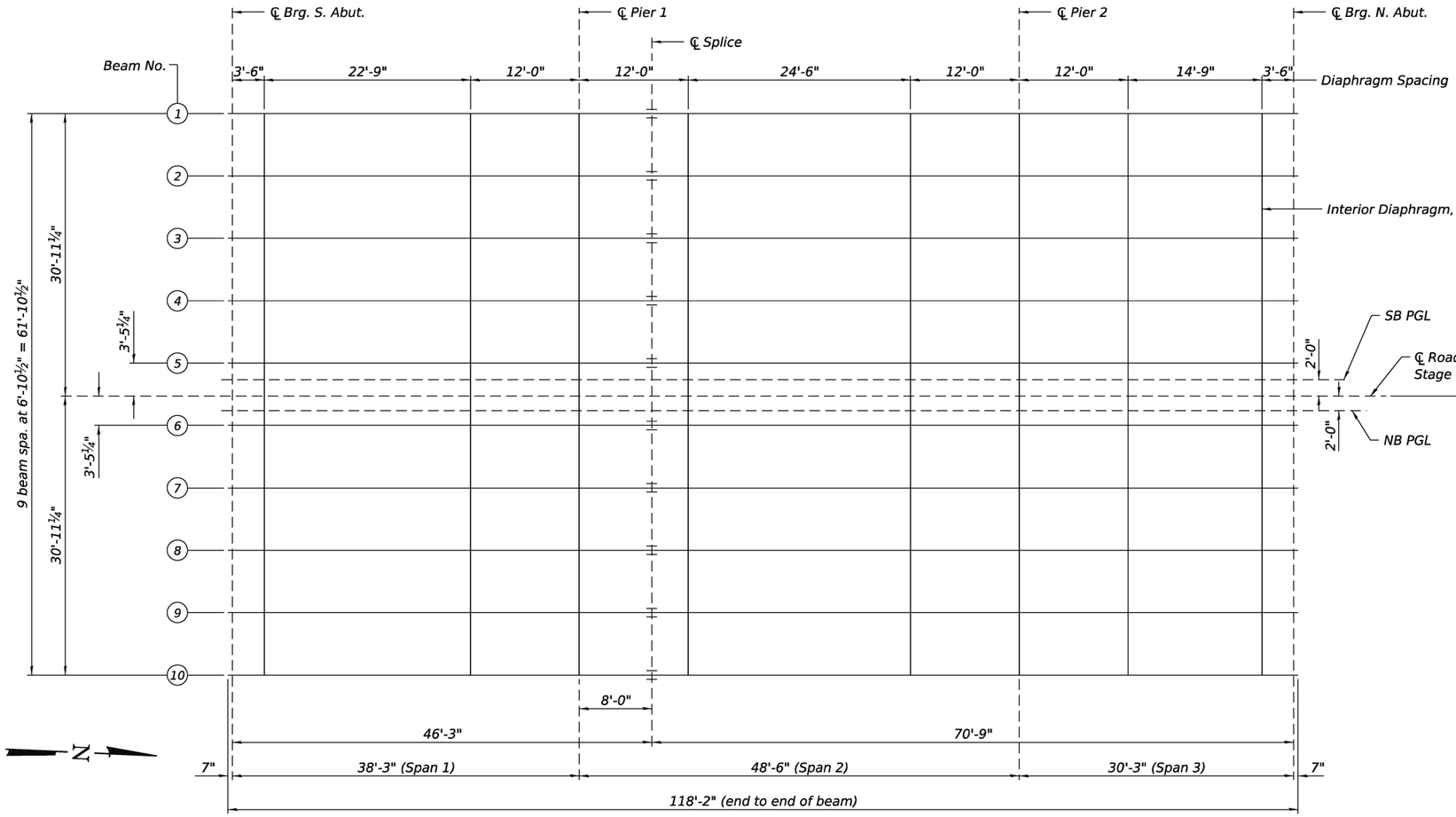

FRAMING PLAN

(All beams are W27x94, AASHTO M270, Grade 50 CVN)

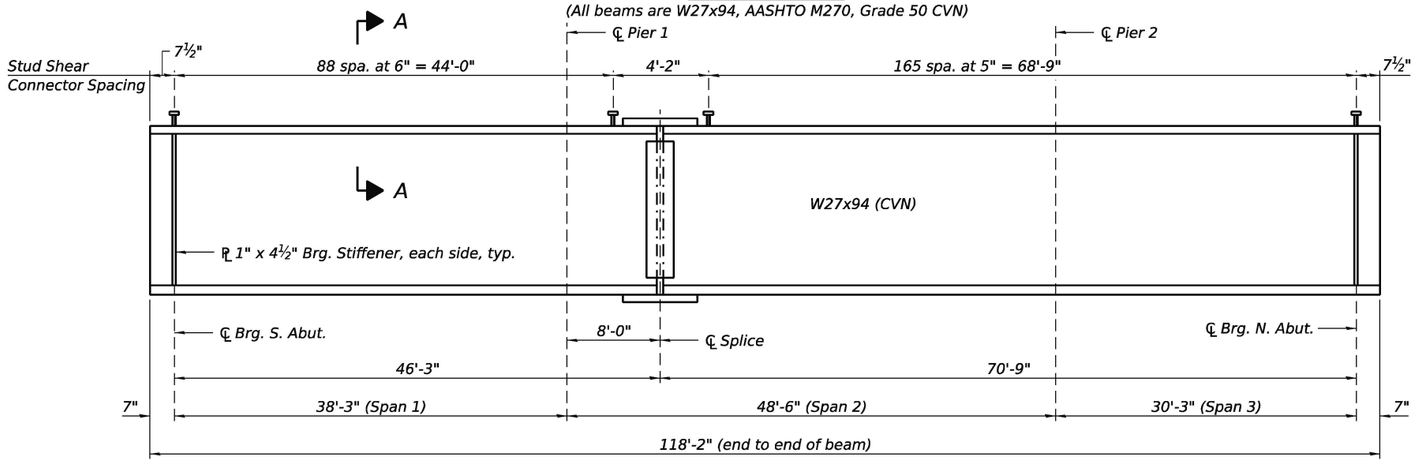

BEAM ELEVATION

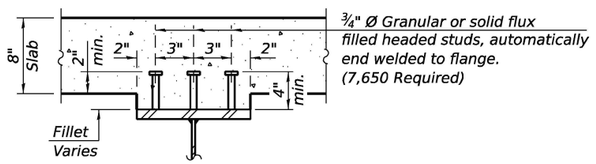

SECTION A-A

Notes:
Load carrying components designated "CVN" shall conform to the Charpy-V-Notch Impact Energy Requirements, Zone 2.
All diaphragms shall be installed as steel is erected and secured with erection pins and bolts except as otherwise noted. Individual diaphragms at supports may be temporarily disconnected to install bearing anchor bolts.
All flange and web splice plates shall be AASHTO M270 Grade 50 (CVN).

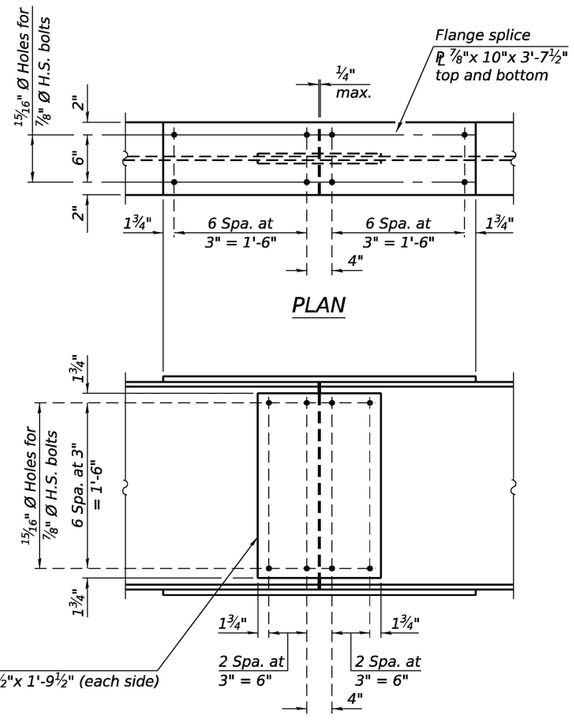

PLAN

ELEVATION

SPLICE DETAIL

(10 Required)

MODEL: Br_Sheet_Consultant
FILE NAME: E:\2410-1\struct\Final Design\CADD (ORD)\CADD_Sheets\0320087-66M30-021-SteelFraming.dgn

LIN ENGINEERING, LTD.
Consulting Engineers
Springfield, Illinois

USER NAME = Mike Haley	DESIGNED - CZ	REVISED -	
	DRAWN - SJH	REVISED -	
PLOT SCALE = $SCALE$	CHECKED - MTH	REVISED -	
PLOT DATE = 6/4/2026	CHECK DATE - 03/2026	REVISED -	

STATE OF ILLINOIS
DEPARTMENT OF TRANSPORTATION

FRAMING PLAN
STRUCTURE NO. 032-0087
SHEET 21 OF 30 SHEETS

F.A.P. RTE.	SECTION	COUNTY	TOTAL SHEETS	SHEET NO.
326	(111HB1)ES	GRUNDY	137	111
		CONTRACT NO. 66M30		
		ILLINOIS	FED. AID PROJECT	

INTERIOR BEAM MOMENT TABLE						
		0.4 Sp. 1	Pier 1	0.5 Sp. 2	Pier 2	0.6 Sp. 3
I_s	(in^4)	3,270	3,270	3,270	3,270	3,270
I_c (n)	(in^4)	10,102	10,102	10,102	10,102	10,102
I_c (3n)	(in^4)	7,754	7,754	7,754	7,754	7,754
I_c (cr)	(in^4)	-	-	-	-	-
S_s	(in^3)	243	243	243	243	243
S_c (n)	(in^3)	376	376	376	376	376
S_c (3n)	(in^3)	343	343	343	343	343
S_c (cr)	(in^3)	-	-	-	-	-
S_x	(in^3)	-	-	-	-	-
DC1	(k/')	0.816	0.816	0.816	0.816	0.816
M_{DC1}	('k)	78	162	92	134	37
DC2	(k/')	0.399	0.399	0.399	0.399	0.399
M_{DC2}	('k)	38	79	45	65	18
DW	(k/')	0.130	0.130	0.130	0.130	0.130
M_{DW}	('k)	13	26	15	21	6
LLDF		0.608	0.608	0.603	0.646	0.663
$M_{℄+IM}$	('k)	339	375	325	354	274
f_t (Strength I)	(ksi)	0	0	0	0	0
$M_u + {}^1/_3 f_t S_x$	('k)	758	996	761	899	557
$\Phi_f M_n$	('k)	1,956	1,580	1,942	1,580	1,999
f_s DC1	(ksi)	3.85	8.00	4.52	6.59	1.81
f_s DC2	(ksi)	1.34	2.76	1.57	2.27	0.63
f_s DW	(ksi)	0.44	0.91	0.52	0.73	0.21
f_s (℄+IM)	(ksi)	10.83	11.95	10.36	11.28	8.74
f_t (Service II)	(ksi)	0.00	0.00	0.00	0.00	0.00
$f_s + {}^{f_t}/_2$ (Service II)	(ksi)	19.71	27.21	20.09	24.27	14.01
Service II Resistance	(ksi)	47.50	47.50	47.50	47.50	47.50
$f_s + {}^{f_t}/_3$ (Strength I)	(ksi)	-	-	-	-	-
$\Phi_f F_n$	(ksi)	-	-	-	-	-
V_f	(k)	40.41	42.32	36.50	49.97	43.90

BEAM REACTION TABLE					
		S. Abut.	Pier 1	Pier 2	N. Abut.
LLDF		0.734	0.734	0.734	0.734
OCF		1.00	1.00	1.00	1.00
R_{DC1}	(k)	39.4	40.4	36.2	36.1
R_{DC2}	(k)	9.7	19.7	17.6	8.0
R_{DW}	(k)	6.3	6.4	5.7	5.8
$R_{℄}$	(k)	72.6	85.9	84.9	70.7
R_{Im}	(k)	19.6	19.6	19.9	19.4
R_{Total} (Strength I)(Impact)	(k)	232.0	269.2	259.1	221.5
R_{Total} (Strength I)(No Impact)	(k)	197.8	235.0	224.3	187.5

Note: Abutment reactions include dead load and live load from the approach slab and the concrete diaphragms.

TOP OF BEAM ELEVATIONS

(for fabrication only)

Location	Beam 1	Beam 2	Beam 3	Beam 4	Beam 5	Beam 6	Beam 7	Beam 8	Beam 9	Beam 10
℄ Brg. S. Abut.	537.58	537.72	537.86	538.00	538.13	538.13	538.00	537.86	537.72	537.58
℄ Brg. Pier 1	536.17	536.30	536.43	536.57	536.71	536.71	536.57	536.43	536.30	536.17
℄ Splice	535.87	536.00	536.13	536.27	536.41	536.41	536.27	536.13	536.00	535.87
℄ Brg. Pier 2	534.40	534.54	534.68	534.82	534.95	534.95	534.82	534.68	534.54	534.40
℄ Brg. N. Abut.	533.31	533.45	533.59	533.73	533.86	533.86	533.73	533.59	533.45	533.31

DEFLECTION LIMITS

INTERIOR GIRDER DEFLECTION TABLE		
Δ ALLOW	(in)	0.582
$\Delta_{℄+IM}$	(in)	0.297

Δ ALLOW: Maximum allowable Service I Live load plus impact deflection according to AASHTO LRFD Bridge Design Specifications 9.5.2.

$\Delta_{℄+IM}$: Calculated value Service I live load plus impact deflection.

I_s, S_s: Non-composite moment of inertia and section modulus of the steel section used for computing f_s (Total-Strength I, and Service II) due to non-composite dead loads (in.⁴ and in.³).

I_c (n), S_c (n): Composite moment of inertia and section modulus of the steel and deck based upon the modular ratio, "n", used for computing f_s (Total-Strength I, and Service II) in uncracked sections due to short-term composite live loads (in.⁴ and in.³).

I_c (3n), S_c (3n): Composite moment of inertia and section modulus of the steel and deck based upon 3 times the modular ratio, "3n", used for computing f_s (Total-Strength I, and Service II) in uncracked sections, due to long-term composite (superimposed) dead loads (in.⁴ and in.³).

I_c (cr), S_c (cr): Composite moment of inertia and section modulus of the steel and longitudinal deck reinforcement, used for computing f_s (Total-Strength I and Service II) in cracked sections, due to both short-term composite live loads and long-term composite (superimposed) dead loads (in.⁴ and in.³).

S_x: Section modulus about the major axis of a section to the controlling flange, tension or compression, taken as yield moment with respect to the controlling flange over the yield strength of the controlling flange (in.³).

DC1: Un-factored non-composite dead load (kips/ft.).

M_{DC1}: Un-factored moment due to non-composite dead load (kip-ft.).

DC2: Un-factored long-term composite (superimposed excluding future wearing surface) dead load (kips/ft.).

M_{DC2}: Un-factored moment due to long-term composite (superimposed excluding future wearing surface) dead load (kip-ft.).

DW: Un-factored long-term composite (superimposed future wearing surface only) dead load (kips/ft.).

M_{DW}: Un-factored moment due to long-term composite (superimposed future wearing surface only) dead load (kip-ft.).

LLDF: Live Load Distribution Factor for moment and shear computed according to Article 4.6.2.2 and further IDOT provisions.

$M_{℄+IM}$: Un-factored live load moment plus dynamic load allowance (impact) (kip-ft.).

M_u: Strength I load combination of factored design moments (kip-ft.). $1.25\ (M_{DC1} + M_{DC2}) + 1.5\ M_{DW} + 1.75\ M_{℄+IM}$

f_t: Factored calculated flange lateral bending stress as calculated using Article 6.10.1.6 and as further simplified by IDOT provisions (ksi).

$\Phi_f M_n$: Factored nominal flexural resistance of the section determined as specified in Article 6.10.7.1 or A6 as applicable (kip-ft.).

f_s DC1: Un-factored stress at edge of flange for controlling steel flange due to vertical non-composite dead loads as calculated below (ksi).
M_{DC1} / S_s

f_s DC2: Un-factored stress at edge of flange for controlling steel flange due to vertical composite dead loads as calculated below (ksi).
M_{DC2} / S_c (3n) or M_{DC2} / S_c (cr) as applicable.

f_s DW: Un-factored stress at edge of flange for controlling steel flange due to vertical composite future wearing surface loads as calculated below (ksi).
M_{DW} / S_c (3n) or M_{DW} / S_c (cr) as applicable.

f_s (℄+ IM): Un-factored stress at edge of flange for controlling steel flange due to vertical composite live load plus impact loads as calculated below (ksi).
$M_{℄+IM} / S_c$ (n) or $M_{℄+IM} / S_c$ (cr) as applicable.

$f_s + f_t / 2$ (Service II): Sum of stresses as computed below (ksi).
f_s DC1 + f_s DC2 + f_s DW + 1.3 f_s (℄+ IM) + f_t /2

Service II Resistance: Composite ($0.95R_hF_{yf}$) or noncomposite ($0.80R_hF_{yf}$) stress capacity according to Article 6.10.4.2 (ksi).

$f_s + f_t / 3$ (Strength I): Sum of stresses as computed below on non-compact sections (ksi).
1.25 (f_s DC1 + f_s DC2) + 1.5 f_s DW + 1.75 f_s (℄+ IM) + f_t /3

$\Phi_f F_n$: Factored nominal flexural resistance of the section as specified in Article 6.10.7.2 or 6.10.8 as applicable (ksi).

V_f: Maximum factored shear range in span computed according to Article 6.10.10.

OCF: Obtuse Correction Factor according to Article 4.6.2.2.3c or as further simplified by IDOT provisions.

R_{DC1}: Un-factored reaction due to non-composite dead load (kip).

R_{DC2}: Un-factored reaction due to long-term composite (superimposed excluding future wearing surface) dead load (kip).

R_{DW}: Un-factored reaction due to long-term composite (superimposed future wearing surface only) dead load (kip).

$R_{℄}$: Un-factored live load reaction (kip).

R_{IM}: Un-factored dynamic load allowance (impact) (kip).

R_{Total} (Strength I)(Impact): Strength I load combination of factored design reactions (kip).
$1.25\ (R_{DC1} + R_{DC2}) + 1.5R_{DW} + 1.75\ (R_{℄} + R_{IM})$

R_{Total} (Strength I)(No Impact): Strength I load combination of factored design reactions, not including dynamic load allowance (Impact) (kip).
$1.25\ (R_{DC1} + R_{DC2}) + 1.5R_{DW} + 1.75\ (R_{℄})$

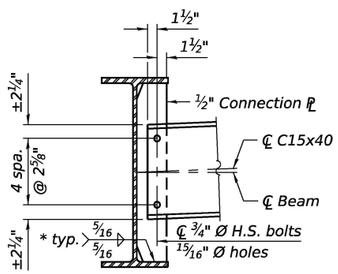

INTERIOR DIAPHRAGM

(72 required)

* 3 sides of each connection ℄.

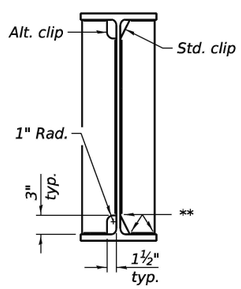

WELD LIMITS AND CLIP DETAILS

** Stop welds ¼" (±⅛") from edges as shown. Typical.

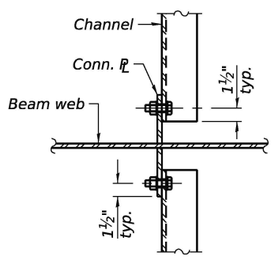

DETAIL A

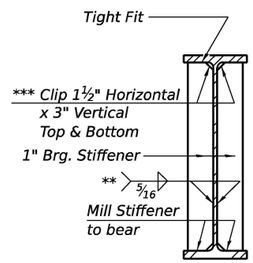

BEARING STIFFENER AT ABUTMENT

(20 locations)

*** Clip may be rounded for ease of shop painting.

MODEL: Br_Sheet_Consultant
FILE NAME: E:\2410-1\struct\Final Design\CADD (ORD)\CADD_Sheets\0320087-66M30-022-SteelDetails.dgn

LIN ENGINEERING,LTD.
Consulting Engineers
Springfield, Illinois

USER NAME = Mike Haley	DESIGNED - CZ	REVISED -	
	DRAWN - SJH	REVISED -	
PLOT SCALE = $SCALE$	CHECKED - MTH	REVISED -	
PLOT DATE = 5/19/2026	CHECK DATE - 03/2026	REVISED -	

STATE OF ILLINOIS
DEPARTMENT OF TRANSPORTATION

STEEL DETAILS
STRUCTURE NO. 032-0087
SHEET 22 OF 30 SHEETS

F.A.P. RTE.	SECTION	COUNTY	TOTAL SHEETS	SHEET NO.
326	(111HB1)ES	GRUNDY	137	112
		CONTRACT NO. 66M30		
	ILLINOIS FED. AID PROJECT			

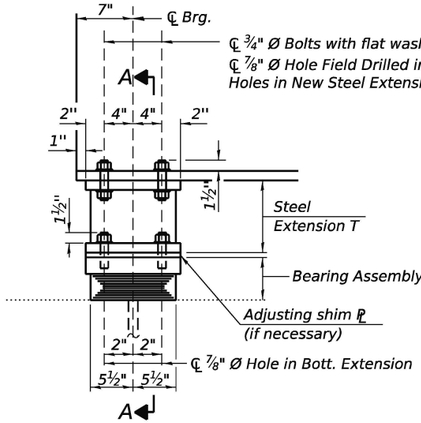

℄ ¾" Ø Bolts with flat washer & hex nut (4 Req'd)
℄ ⅞" Ø Hole Field Drilled in Bottom Flange to Match Holes in New Steel Extension Top Plate

ELEVATION AT ABUTS.

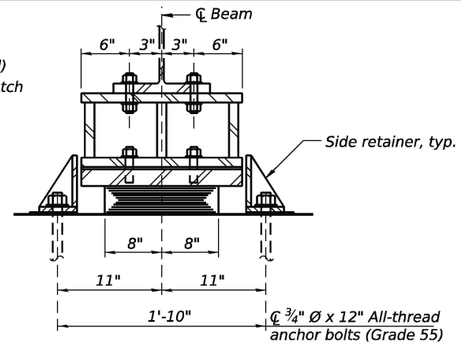

℄ ¾" Ø x 12" All-thread anchor bolts (Grade 55) with 2" x 2" x 5/16" ℙ washer under nut.

SECTION A-A

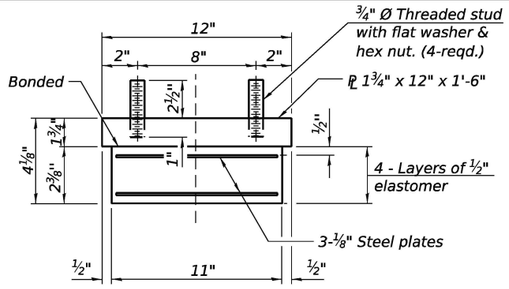

BEARING ASSEMBLY

Note:
Shim plates shall not be placed under bearing assembly.

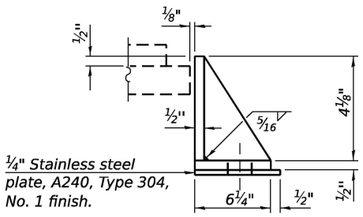

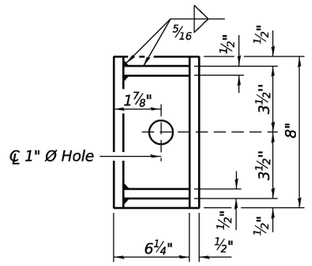

SIDE RETAINER

Equivalent rolled angle with stiffeners will be allowed in lieu of welded plates.

TYPE I ELASTOMERIC EXP. BRG. AT ABUTMENTS

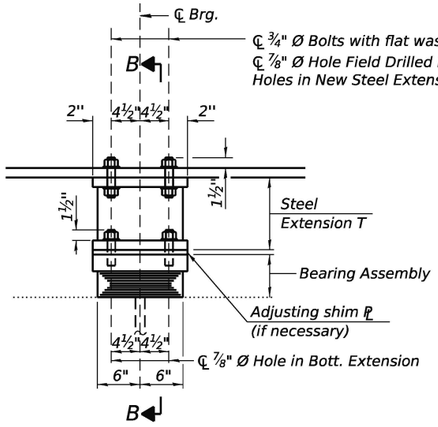

℄ ¾" Ø Bolts with flat washer & hex nut (4 Req'd)
℄ ⅞" Ø Hole Field Drilled in Bottom Flange to Match Holes in New Steel Extension Top Plate

ELEVATION AT PIER 1

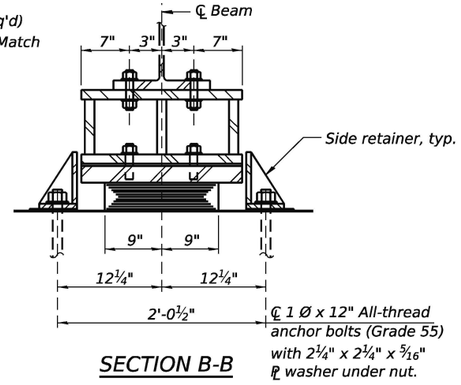

℄ 1 Ø x 12" All-thread anchor bolts (Grade 55) with 2¼" x 2¼" x 5/16" ℙ washer under nut.

SECTION B-B

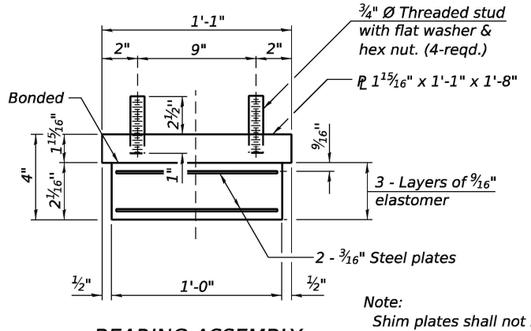

BEARING ASSEMBLY

Note:
Shim plates shall not be placed under bearing assembly.

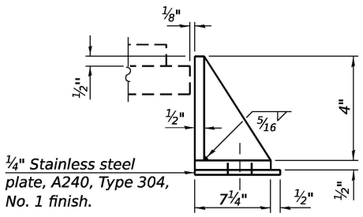

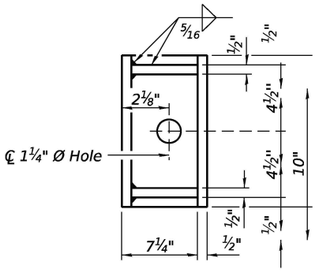

SIDE RETAINER

Equivalent rolled angle with stiffeners will be allowed in lieu of welded plates.

TYPE I ELASTOMERIC EXP. BRG. AT PIER 1

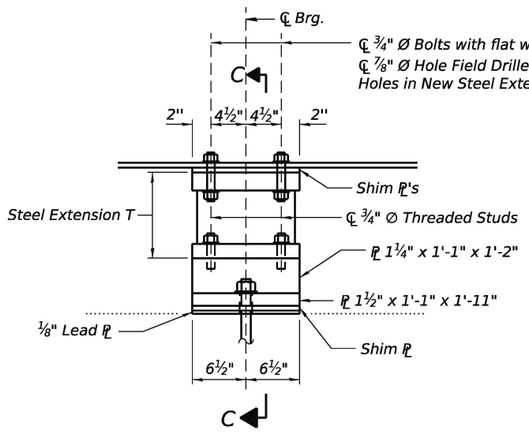

℄ ¾" Ø Bolts with flat washer & hex nut (4 Req'd)
℄ ⅞" Ø Hole Field Drilled in Bottom Flange to Match Holes in New Steel Extension Top Plate

ELEVATION AT PIER 2

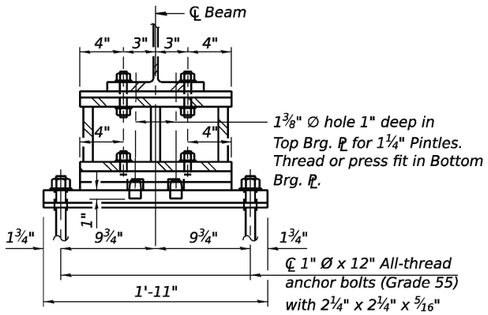

℄ 1" Ø x 12" All-thread anchor bolts (Grade 55) with 2¼" x 2¼" x 5/16" ℙ washer under nut.
1½" - Ø Holes in bottom ℙ.

SECTION C-C

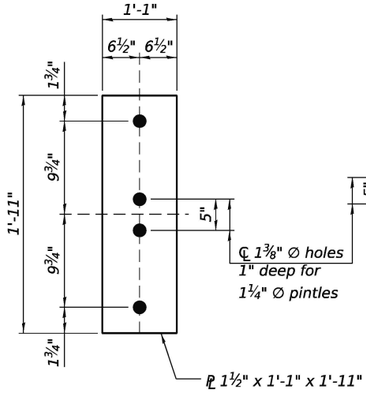

PLAN - BOTTOM PLATE

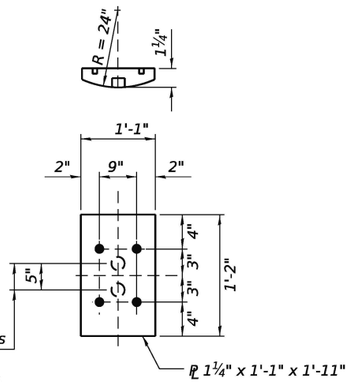

PLAN - TOP PLATE

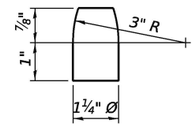

PINTLE

FIXED BEARING AT PIER 2

Notes:
The structural steel plates of the Bearing Assembly shall conform to the requirements of AASHTO M270 Grade 50.
All bearing plates and steel extensions shall be AASHTO M270 Grade 50; pintles shall be AASHTO M270 Grade 36.
Two ⅛ in. adjusting shims shall be provided for each bearing in addition to all other plates or shims and placed as shown on bearing details.
Side retainers and stainless steel plates shall be included in the cost of Elastomeric Bearing Assembly, Type I.
Anchor bolts and side retainers at all supports shall be installed as each member is erected unless an equivalent temporary means of lateral restraint is used.
Cost of the Fixed Bearing Assemblies shall be included in Furnishing and Erecting Structural Steel.
See sheet 24 of 30 for steel extension details.

BILL OF MATERIAL

Item	Unit	Total
Elastomeric Bearing Assembly Type I	Each	30
Anchor Bolts, ¾"	Each	40
Anchor Bolts, 1"	Each	40

MODEL: Br_Sheet_Consultant
FILE NAME: E:\24210-1\struct\Final Design\CADD (ORD)\CADD_Sheets\032087-66M30-023-BearingDetails1.dgn

LIN ENGINEERING, LTD.
Consulting Engineers
Springfield, Illinois

USER NAME = LIN03-PC	DESIGNED - CZ	REVISED -	
	DRAWN - SJH	REVISED -	
PLOT SCALE = $SCALE$	CHECKED - MTH	REVISED -	
PLOT DATE = 6/22/2026	CHECK DATE - 03/2026	REVISED -	

STATE OF ILLINOIS
DEPARTMENT OF TRANSPORTATION

BEARING DETAILS
STRUCTURE NO. 032-0087
SHEET 23 OF 30 SHEETS

F.A.P. RTE.	SECTION	COUNTY	TOTAL SHEETS	SHEET NO.
326	(111HB1)ES	GRUNDY	137	113
		CONTRACT NO. 66M30		
		ILLINOIS	FED. AID PROJECT	

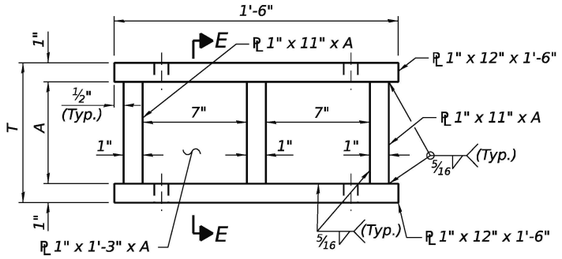

ELEVATION STEEL EXTENSION

$A = T - 2"$

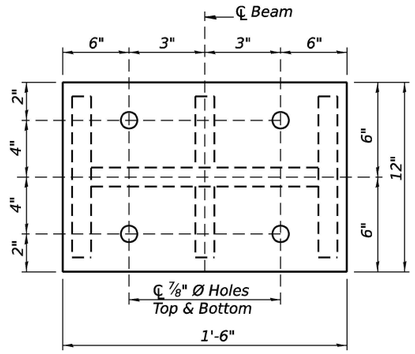

PLAN STEEL EXTENSION

STEEL EXTENSIONS AT ABUTMENTS

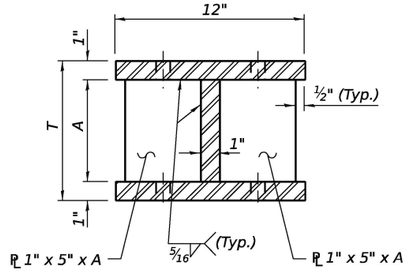

SECTION E-E

$A = T - 2"$

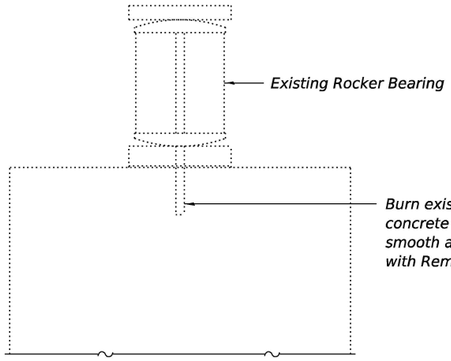

EXISTING BEARING REMOVAL

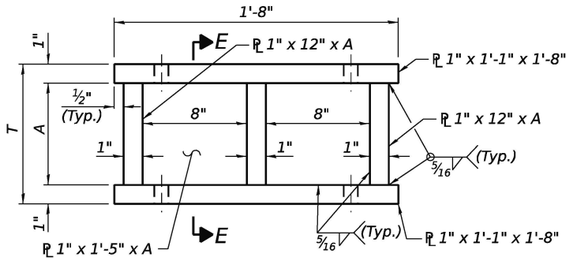

ELEVATION STEEL EXTENSION

$A = T - 2"$

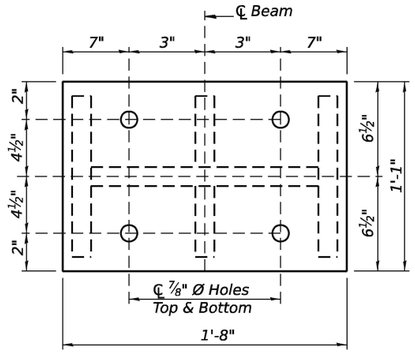

PLAN STEEL EXTENSION

STEEL EXTENSIONS AT PIER 1

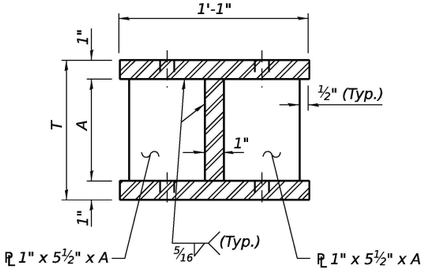

SECTION E-E

$A = T - 2"$

Note:
The Contractor is to verify the existing dimensions prior to fabricating the bearing extensions and fill plates. Cost of extensions and fill plates included with Furnishing and Erecting Structural Steel.

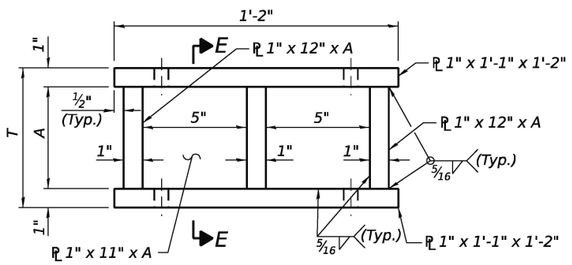

ELEVATION STEEL EXTENSION

$A = T - 2"$

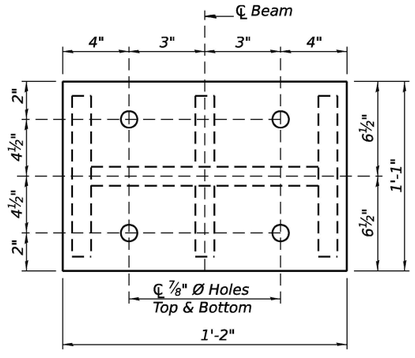

PLAN STEEL EXTENSION

STEEL EXTENSIONS AT PIER 2

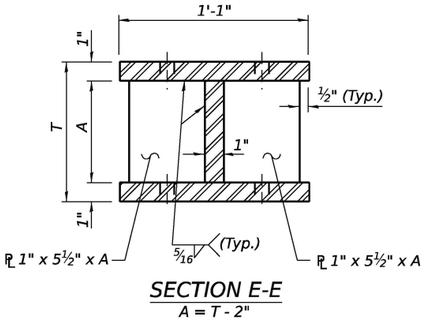

SECTION E-E

$A = T - 2"$

BEARING EXTENSION / FILL PLATE THICKNESS "T"

	S. Abut.	Pier 1	Pier 2	N. Abut.
Beam 1	9¼"	10⅜"	10⅜"	10⅜"
Beam 2	9¾"	10⅜"	10⅞"	10⅜"
Beam 3	10¼"	11¼"	11½"	11⅛"
Beam 4	10⅝"	11⅝"	12"	11¾"
Beam 5	10¾"	11⅞"	12⅛"	11¾"
Beam 6	10¾"	11¾"	12⅛"	11⅞"
Beam 7	10¾"	11½"	11¾"	11⅝"
Beam 8	10¼"	11½"	11⅜"	11¼"
Beam 9	9⅞"	10⅞"	11⅛"	10⅞"
Beam 10	9⅜"	10¼"	11"	10⅛"

MODEL: Br_Sheet_Consultant
FILE NAME: E:\2410-1\struct\Final Design\CADD (ORD)\CADD_Sheets\0320087-66M30-024-BearingDetails2.dgn

LIN ENGINEERING, LTD.
Consulting Engineers
Springfield, Illinois

USER NAME = Mike Haley	DESIGNED - CZ	REVISED -	STATE OF ILLINOIS DEPARTMENT OF TRANSPORTATION	BEARING DETAILS STRUCTURE NO. 032-0087	SHEET 24 OF 30 SHEETS
	DRAWN - SJH	REVISED -			
PLOT SCALE = $SCALE$	CHECKED - MTH	REVISED -			
PLOT DATE = 5/19/2026	CHECK DATE - 03/2026	REVISED -			

F.A.P. RTE.	SECTION	COUNTY	TOTAL SHEETS	SHEET NO.
326	(111HB1)ES	GRUNDY	137	114
		CONTRACT NO. 66M30		
	ILLINOIS FED. AID PROJECT			

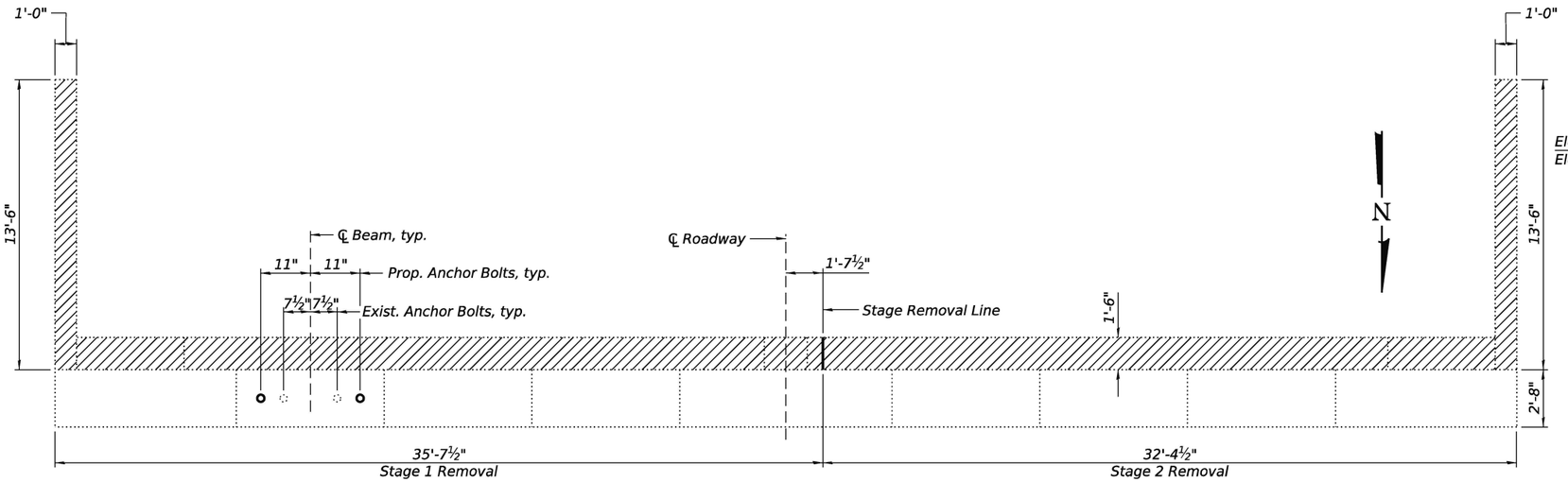

PLAN - SOUTH ABUTMENT

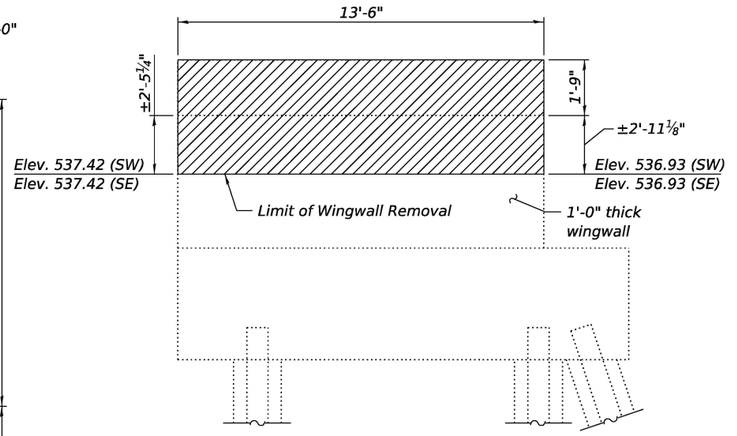

WINGWALL ELEVATION - SOUTH ABUTMENT

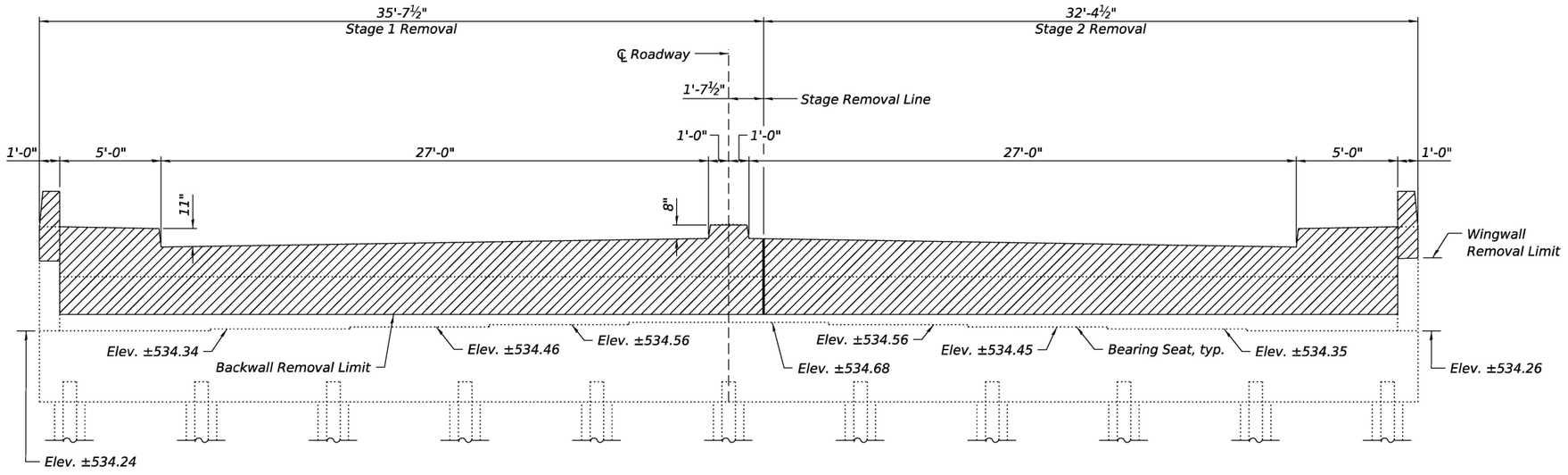

ELEVATION - SOUTH ABUTMENT

(Looking South)

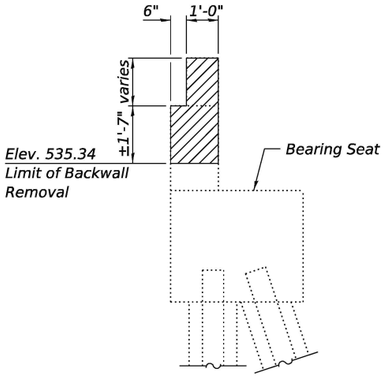

SECTION THRU SOUTH ABUTMENT

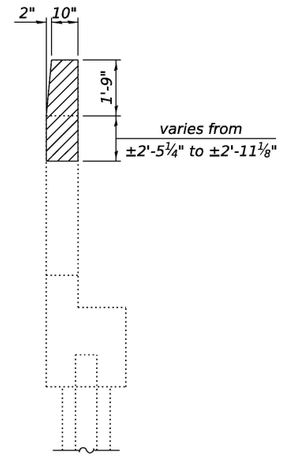

SECTION THRU WINGWALL

BILL OF MATERIAL

Item	Unit	Total
Concrete Removal	Cu. Yd.	14.6

Notes:
Hatched area indicates limits of Concrete Removal.
Seal the cut rebar at top of wingwall and backwall removal limits with epoxy. Cost included with Concrete Removal.
Bearing Seat elevations shown are taken from survey data.

MODEL: Br_Sheet_Consultant
FILE NAME: E:\2410-1\struct\Final Design\CADD (ORD)\CADD_Sheets\0320087-66M30-025-ConcRemDtls1.dgn

LIN ENGINEERING, LTD.
Consulting Engineers
Springfield, Illinois

USER NAME = LIN03-PC	DESIGNED - CZ	REVISED -	STATE OF ILLINOIS DEPARTMENT OF TRANSPORTATION	CONCRETE REMOVAL DETAILS STRUCTURE NO. 032-0087
	DRAWN - SJH	REVISED -		
PLOT SCALE = $SCALE$	CHECKED - MTH	REVISED -		SHEET 25 OF 30 SHEETS
PLOT DATE = 6/19/2026	CHECK DATE - 03/2026	REVISED -		

F.A.P. RTE.	SECTION	COUNTY	TOTAL SHEETS	SHEET NO.
326	(111HB1)ES	GRUNDY	137	115
		CONTRACT NO. 66M30		
		ILLINOIS	FED. AID PROJECT	

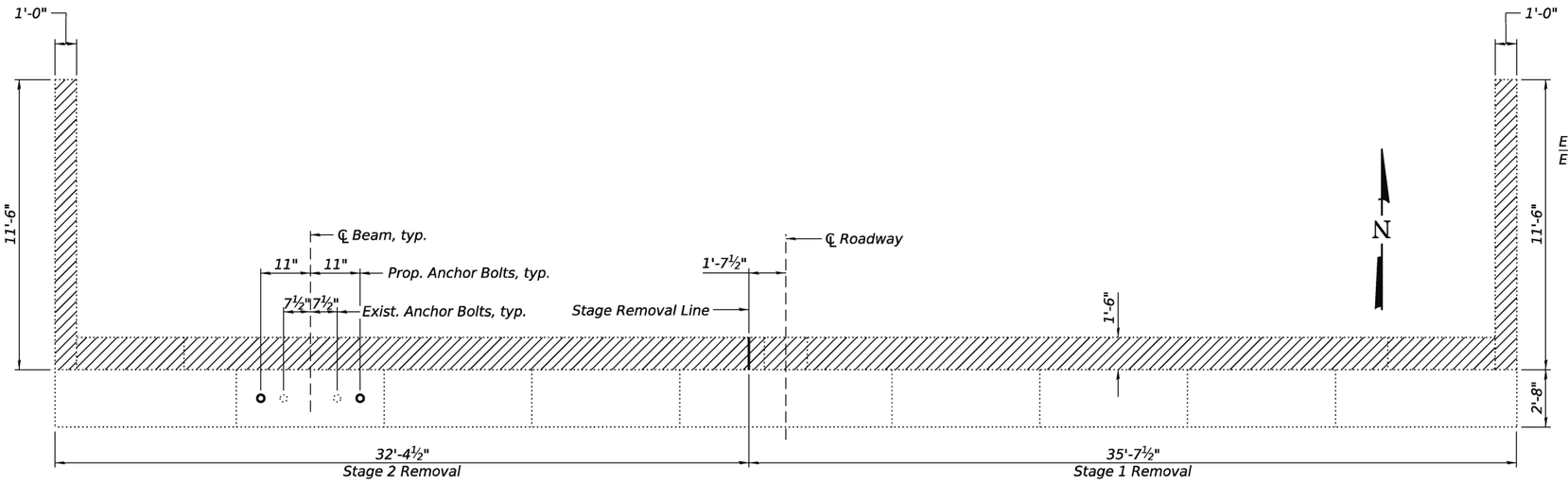

PLAN - NORTH ABUTMENT

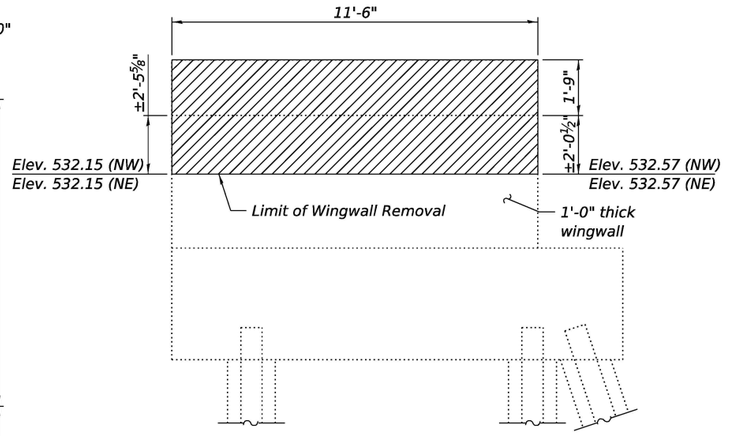

WINGWALL ELEVATION - NORTH ABUTMENT

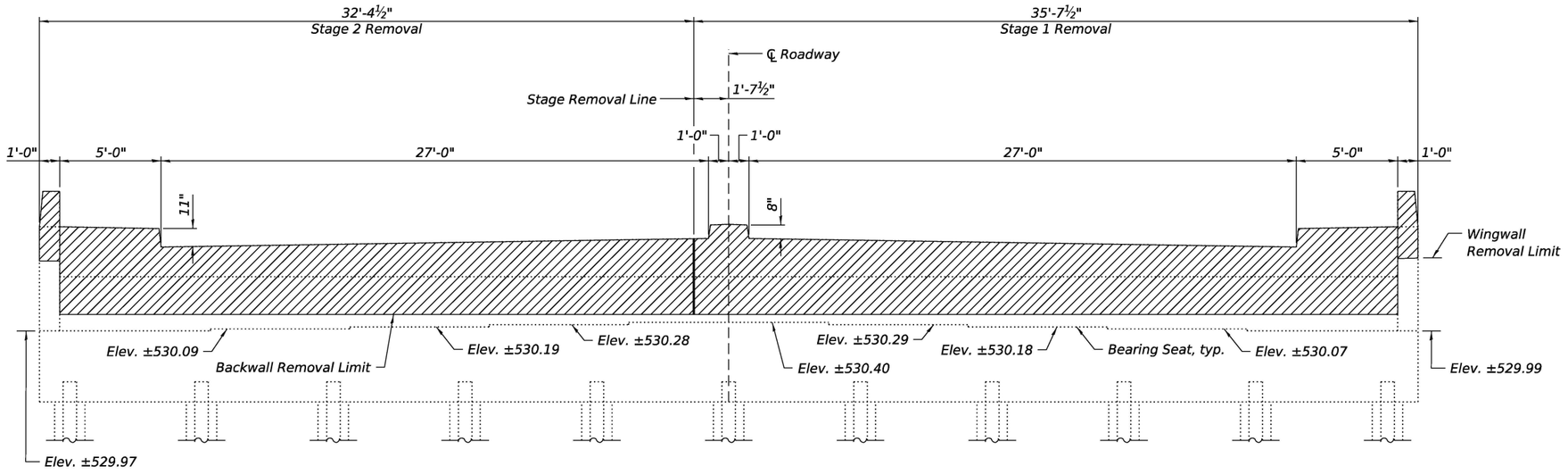

ELEVATION - NORTH ABUTMENT
(Looking North)

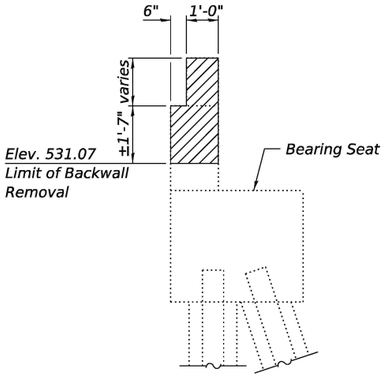

SECTION THRU NORTH ABUTMENT

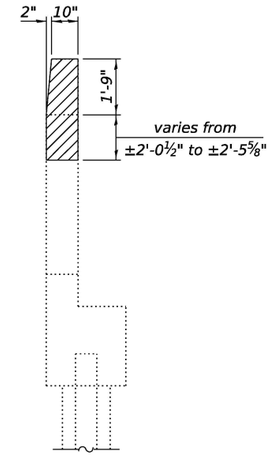

SECTION THRU WINGWALL

BILL OF MATERIAL

Item	Unit	Total
Concrete Removal	Cu. Yd.	13.4

Notes:
Hatched area indicates limits of Concrete Removal.
Seal the cut rebar at top of wingwall and backwall removal limits with epoxy. Cost included with Concrete Removal.
Bearing Seat elevations shown are taken from survey data.

MODEL: Br_Sheet_Consultant
FILE NAME: E:\2410-1\struct\Final Design\CADD (ORD)\CADD_Sheets\0320087-66M30-026-ConcRemDtls2.dgn

LIN ENGINEERING, LTD.
Consulting Engineers
Springfield, Illinois

USER NAME = LIN03-PC		DESIGNED - CZ		REVISED -
		DRAWN - SJH		REVISED -
PLOT SCALE = $SCALE$		CHECKED - MTH		REVISED -
PLOT DATE = 6/4/2026		CHECK DATE - 03/2026		REVISED -

STATE OF ILLINOIS
DEPARTMENT OF TRANSPORTATION

CONCRETE REMOVAL DETAILS
STRUCTURE NO. 032-0087
SHEET 26 OF 30 SHEETS

F.A.P. RTE.	SECTION	COUNTY	TOTAL SHEETS	SHEET NO.
326	(111HB1)ES	GRUNDY	137	116
		CONTRACT NO. 66M30		
		ILLINOIS	FED. AID PROJECT	

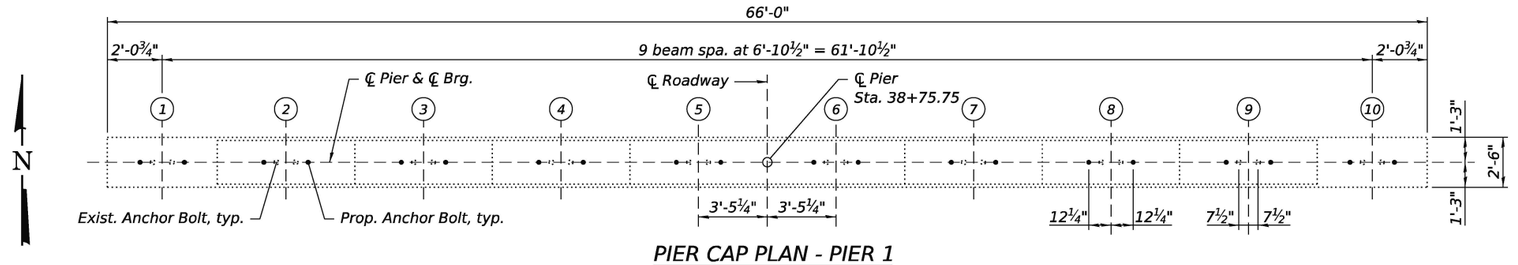

PIER CAP PLAN - PIER 1

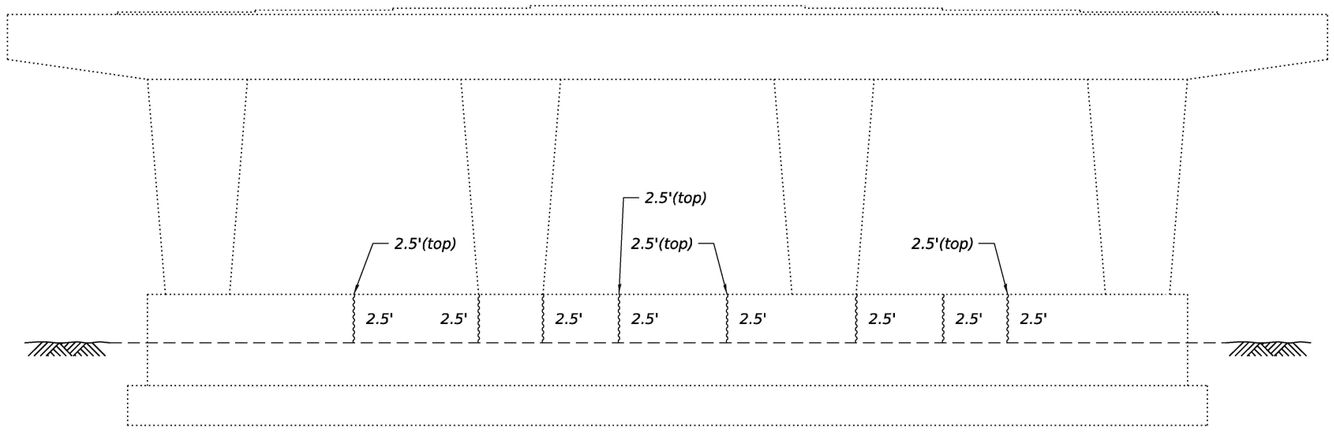

ELEVATION - PIER 1
(North Face)

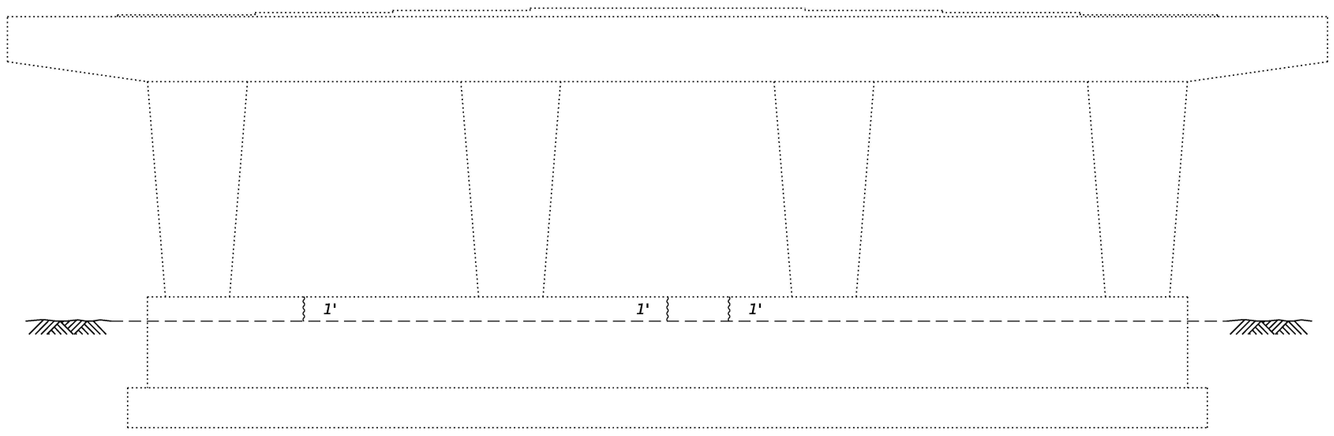

ELEVATION - PIER 1
(South Face)

Note:
Repair of the existing pier shall include but may not be limited to the areas shown. The actual area to be repaired shall be determined by the Engineer at the time of construction.

LEGEND

〰 *Epoxy Crack Injection*

BILL OF MATERIAL

Item	Unit	Total
Epoxy Crack Injection	Foot	31

MODEL: Br_Sheet_Consultant
FILE NAME: E:\241C-1\struct\Final Design\CADD (ORD)\CADD_Sheets\0320087-66M30-027-PierRepairDtls1.dgn

LIN ENGINEERING, LTD.
Consulting Engineers
Springfield, Illinois

USER NAME = LIN03-PC	DESIGNED - CZ	REVISED -	
	DRAWN - SJH	REVISED -	
PLOT SCALE = $SCALE$	CHECKED - MTH	REVISED -	
PLOT DATE = 6/20/2026	CHECK DATE - 03/2026	REVISED -	

STATE OF ILLINOIS
DEPARTMENT OF TRANSPORTATION

PIER REPAIR DETAILS
STRUCTURE NO. 032-0087
SHEET 27 OF 30 SHEETS

F.A.P. RTE.	SECTION	COUNTY	TOTAL SHEETS	SHEET NO.
326	(111HB1)ES	GRUNDY	137	117
		CONTRACT NO. 66M30		
	ILLINOIS	FED. AID PROJECT		

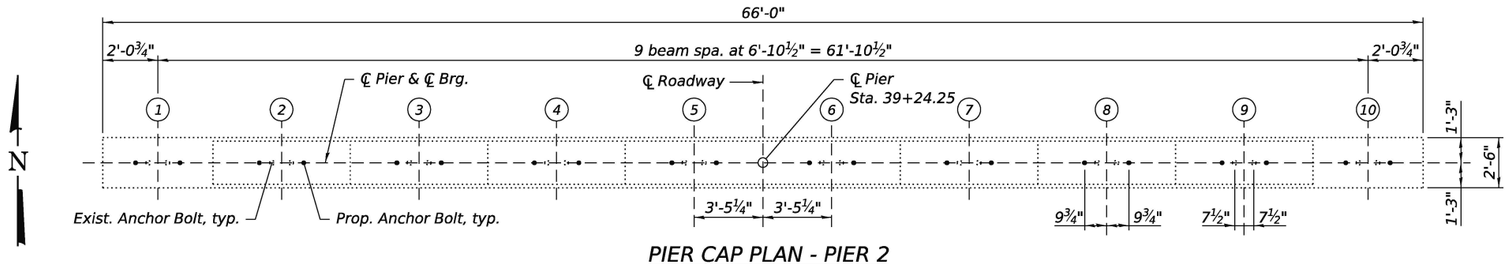

PIER CAP PLAN - PIER 2

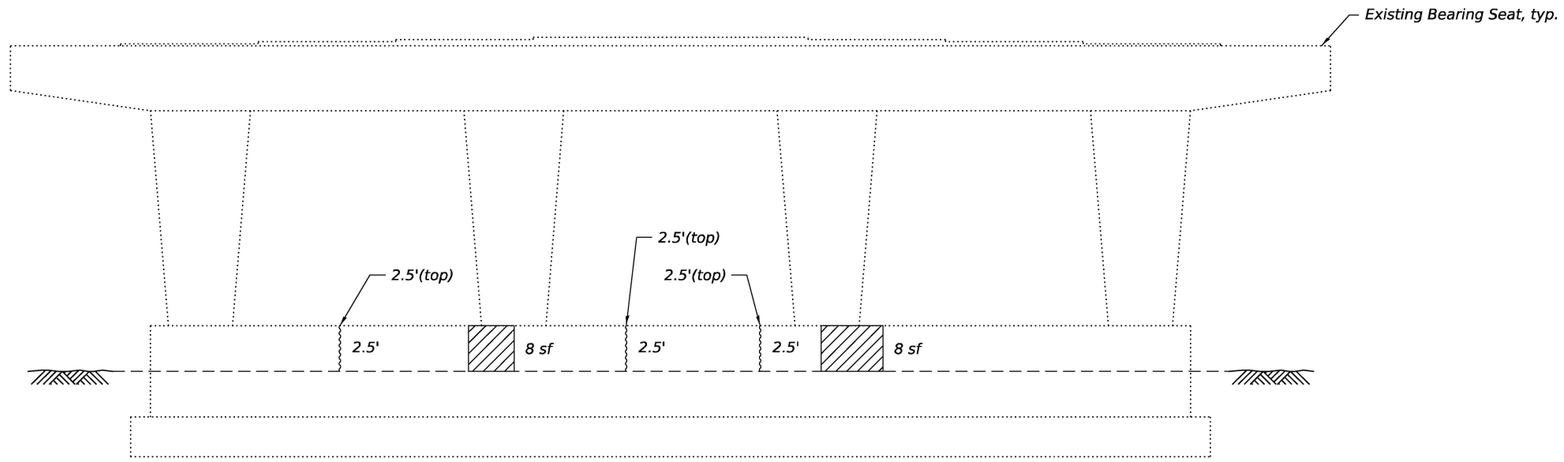

ELEVATION - PIER 2
(South Face)

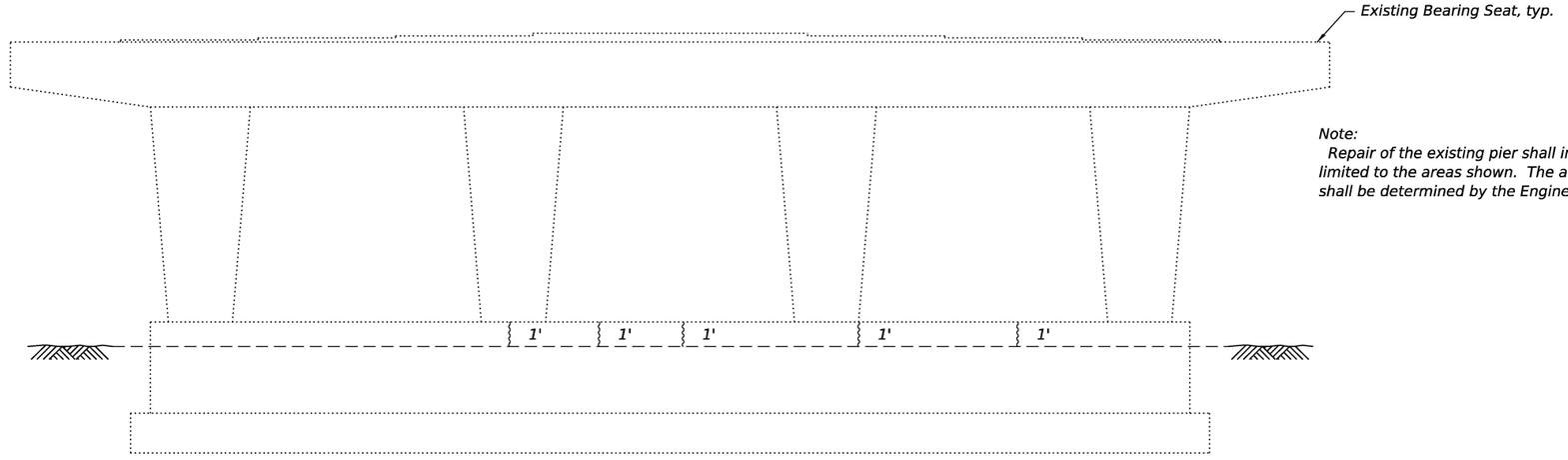

ELEVATION - PIER 2
(North Face)

LEGEND

- Structural Repair of Concrete (Depth ≤ Than 5 in.)
- Epoxy Crack Injection
- sf Square Feet

Note:
Repair of the existing pier shall include but may not be limited to the areas shown. The actual area to be repaired shall be determined by the Engineer at the time of construction.

BILL OF MATERIAL

Structural Repair of Concrete (Depth Equal to or less than 5 in.)	Sq. Ft.	16
Epoxy Crack Injection	Foot	20

(Sheet 2 of 2)

LIN ENGINEERING, LTD.
Consulting Engineers
Springfield, Illinois

USER NAME = LIN03-PC	DESIGNED - CZ	REVISED -	STATE OF ILLINOIS DEPARTMENT OF TRANSPORTATION	PIER REPAIR DETAILS STRUCTURE NO. 032-0087
	DRAWN - SJH	REVISED -		
PLOT SCALE = $SCALE$	CHECKED - MTH	REVISED -		SHEET 28 OF 30 SHEETS
PLOT DATE = 6/20/2026	CHECK DATE - 03/2026	REVISED -		

F.A.P. RTE.	SECTION	COUNTY	TOTAL SHEETS	SHEET NO.
326	(111HB1)ES	GRUNDY	137	118
		CONTRACT NO. 66M30		
	ILLINOIS	FED. AID PROJECT		

MODEL: Br_Sheet_Consultant
FILE NAME: E:\2410-1\struct\Final Design\CADD (ORD)\CADD_Sheets\0320087-66M30-028-PierRepairDtls2.dgn

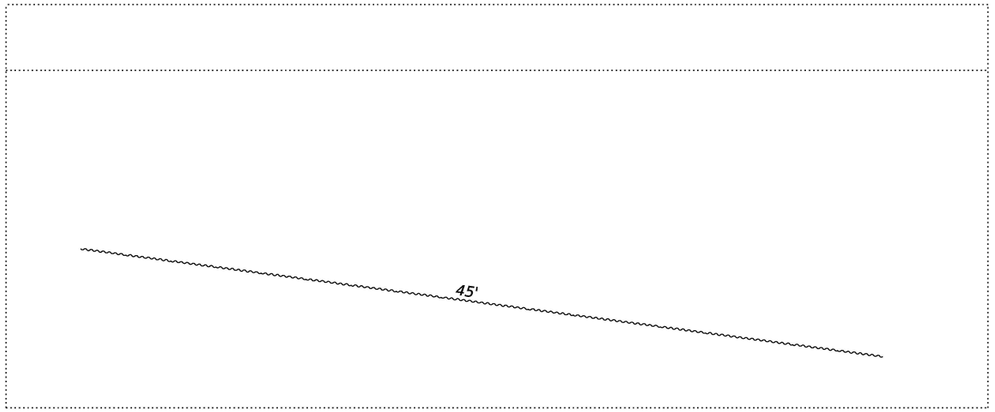

NORTH SLOPE WALL

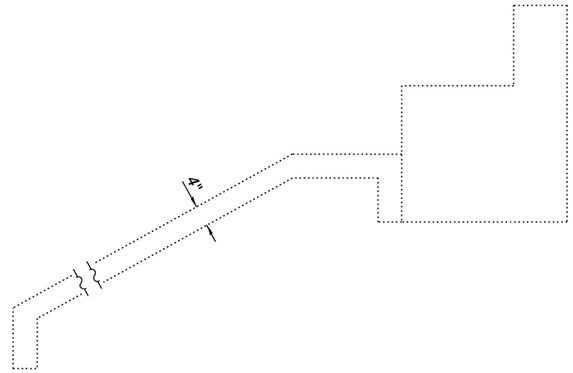

SECTION THRU SLOPE WALL

N

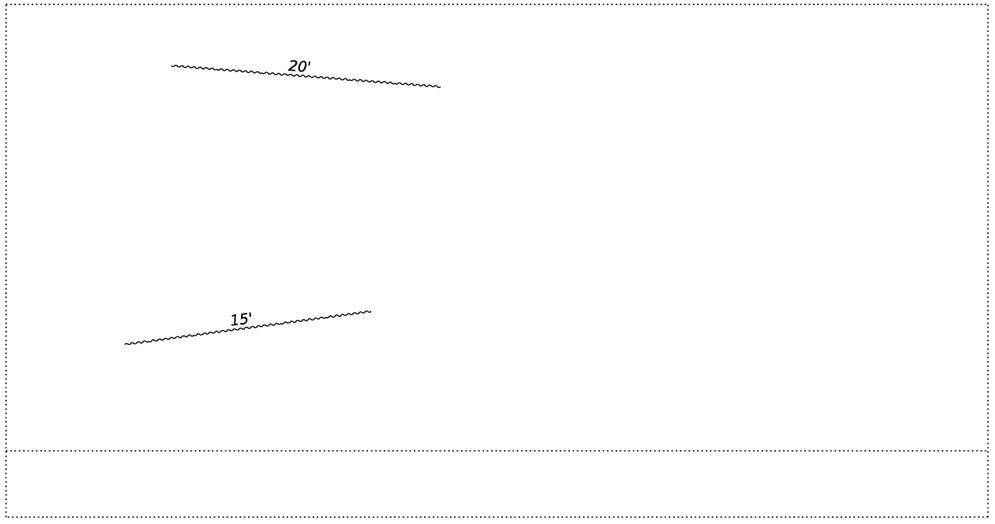

SOUTH SLOPE WALL

LEGEND

Slope Wall Crack Sealing

Note:
Repair of existing slope wall shall include but may not be limited to the area shown. The actual area to be repaired shall be determined by the Engineer at the time of construction.

BILL OF MATERIAL

Item	Unit	Total
Slope Wall Crack Sealing	Foot	80

MODEL: Br_Sheet_Consultant
FILE NAME: E:\2410-1\struct\Final Design\CADD (ORD)\CADD_Sheets\03220087-66M30-029-SlopeWallRepairDtls.dgn

LIN ENGINEERING, LTD.
Consulting Engineers
Springfield, Illinois

USER NAME = Mike Haley		DESIGNED - CZ	REVISED -	
		DRAWN - SJH	REVISED -	
PLOT SCALE = $SCALE$		CHECKED - MTH	REVISED -	
PLOT DATE = 5/19/2026		CHECK DATE - 03/2026	REVISED -	

STATE OF ILLINOIS
DEPARTMENT OF TRANSPORTATION

SLOPE WALL REPAIR DETAILS
STRUCTURE NO. 032-0087
SHEET 29 OF 30 SHEETS

F.A.P. RTE.	SECTION	COUNTY	TOTAL SHEETS	SHEET NO.
326	(111HB1)ES	GRUNDY	137	119
		CONTRACT NO. 66M30		
	ILLINOIS	FED. AID PROJECT		

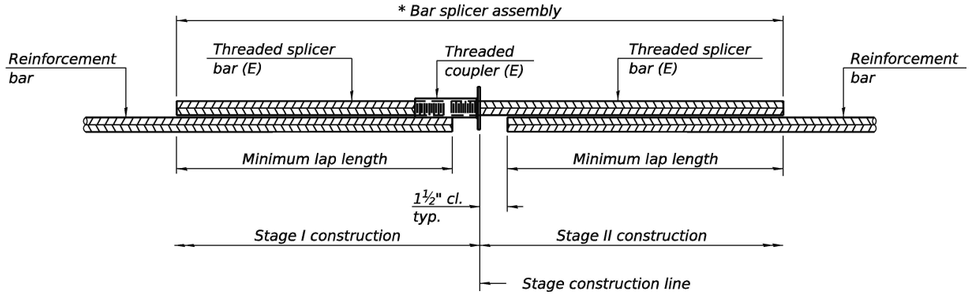

STANDARD BAR SPLICER ASSEMBLY PLAN

Only bar splicer assemblies as presented on the approved QPL list may be used.

Threaded splicer bar length = min. lap length + 1½" + thread length

* Epoxy not required on Bar Splicer Assembly components used in conjunction with black bars.

Location	Bar size	No. assemblies required	Minimum lap length
Deck Slab	#5	368	3'-10"
Concrete Diaphragm	#6	14	3'-6"
Concrete Diaphragm	#4	4	1'-7"
Approach Slab	#5	92	2'-6"
Approach Slab	#8	120	5'-2"
Approach Footing	#5	80	2'-1"

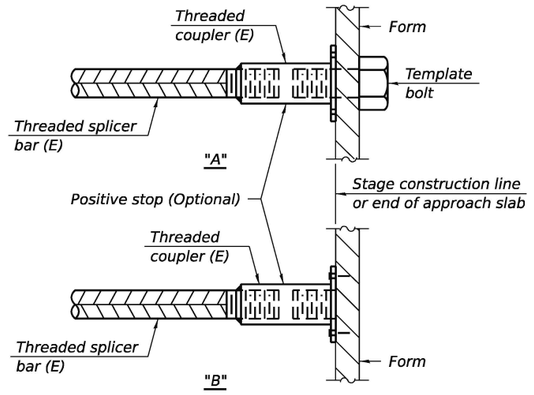

INSTALLATION AND SETTING METHODS

"A" : Set bar splicer assembly by means of a template bolt.
"B" : Set bar splicer assembly by nailing to wood forms or cementing to steel forms.
(E) : Indicates epoxy coating.

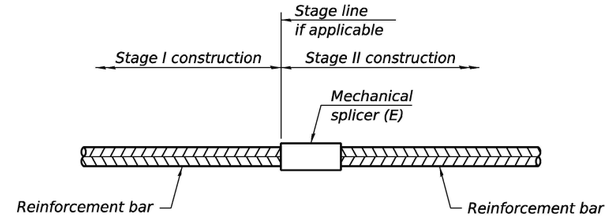

STANDARD MECHANICAL SPLICER

Location	Bar size	No. assemblies required

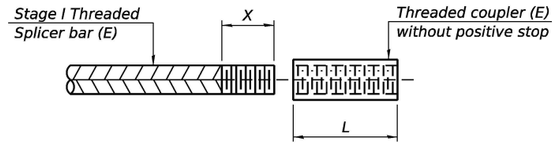

THREADING OF ASSEMBLIES

The threaded length "X" shall be no more than L/2. The bar should be tightened until 0-1 thread(s) is/are exposed.

Notes:
Splicer bars shall be deformed with threaded ends and have a minimum 60 ksi yield strength.
All reinforcement shall be lapped and tied to the splicer bars.
Bar splicer assemblies shall be epoxy coated according to the requirements for reinforcement bars. See Section 508 of the Standard Specifications.
See approved list of bar splicer assemblies and mechanical splicers for alternatives.

BSD-1

4-4-2025

LIN ENGINEERING,LTD.
Consulting Engineers
Springfield, Illinois

USER NAME = Mike Haley	DESIGNED - CZ	REVISED -	
	DRAWN - SJH	REVISED -	
PLOT SCALE = $SCALE$	CHECKED - MTH	REVISED -	
PLOT DATE = 5/19/2026	CHECK DATE - 03/2026	REVISED -	

STATE OF ILLINOIS
DEPARTMENT OF TRANSPORTATION

BAR SPLICER ASSEMBLY AND MECHANICAL SPLICER DETAILS
STRUCTURE NO. 032-0087
SHEET 30 OF 30 SHEETS

F.A.P. RTE.	SECTION	COUNTY	TOTAL SHEETS	SHEET NO.
326	(111HB1)ES	GRUNDY	137	120
		CONTRACT NO. 66M30		
	ILLINOIS	FED. AID PROJECT		

MODEL: Br_Sheet_Consultant
FILE NAME: E:\241C-1\struct\Final Design\CADD (ORD)\CADD_Sheets\0320087-66M30-030-BarSplicerDtls.dgn

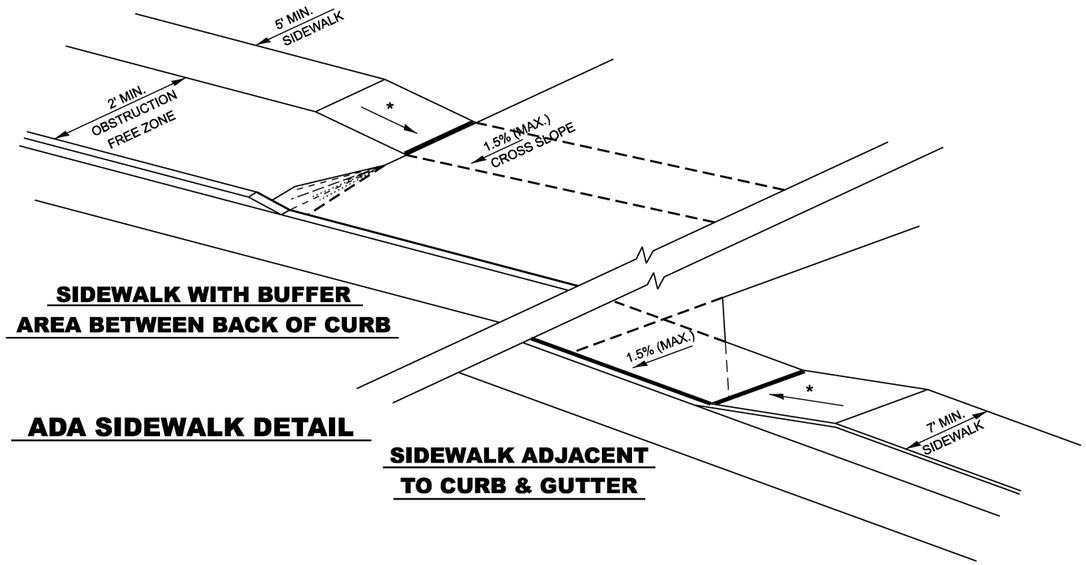

SIDEWALK WITH BUFFER AREA BETWEEN BACK OF CURB

ADA SIDEWALK DETAIL

SIDEWALK ADJACENT TO CURB & GUTTER

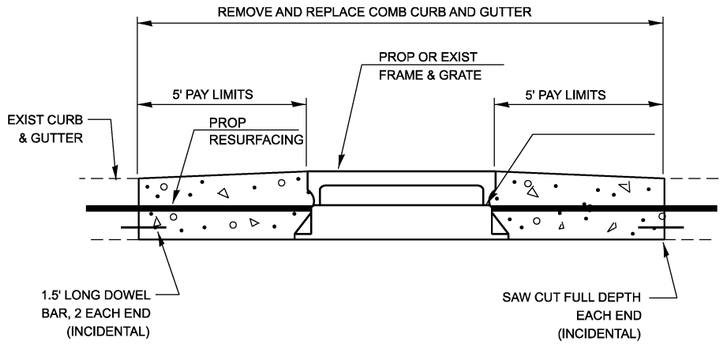

INLET ADJUST

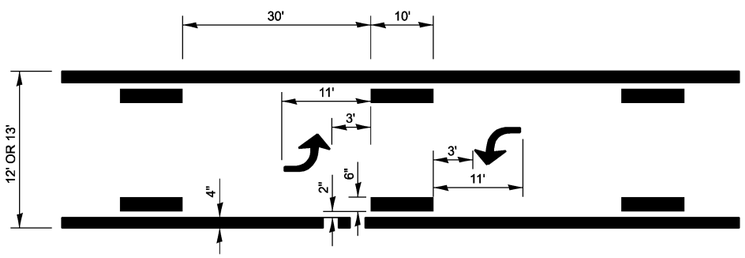

TYPICAL APPLICATION @ BI-DIRECTIONAL TURN LANE

DESIGNER NOTE:
MINIMUM 2 SETS OF ARROWS, ADDITIONAL SETS AT 200'-300' APART.

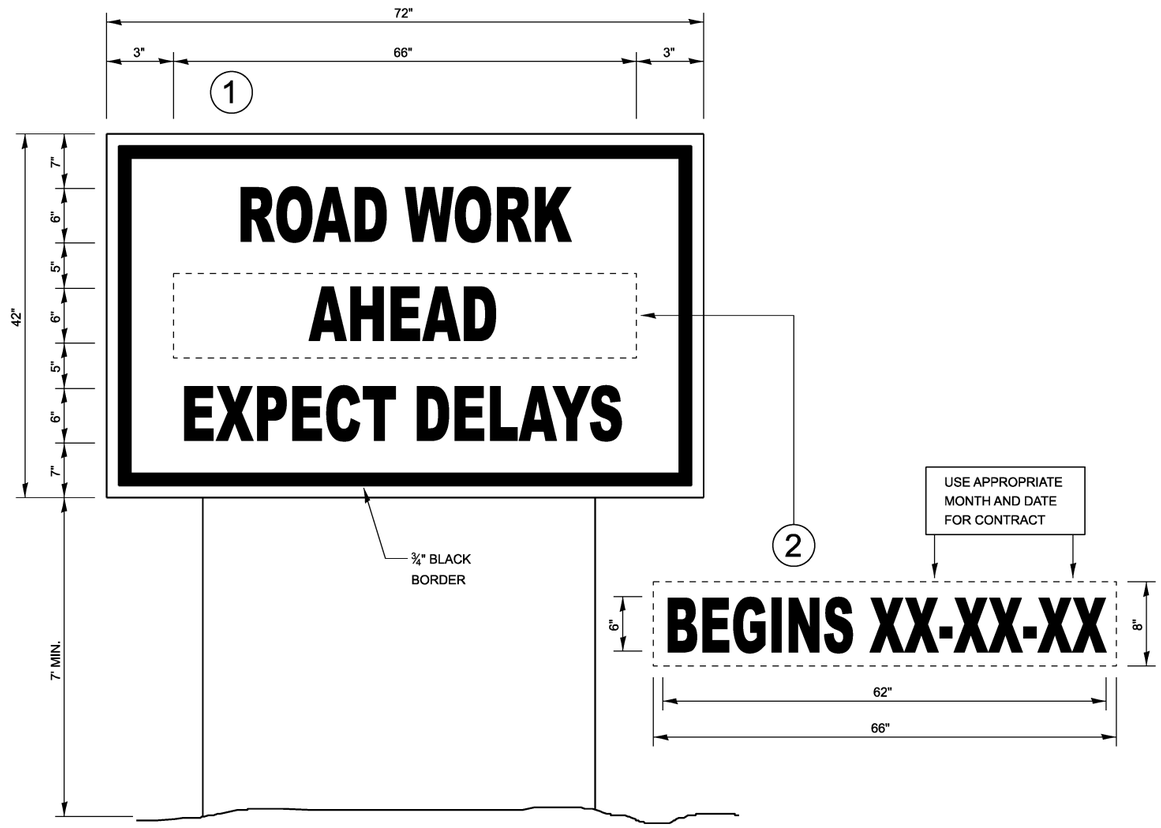

TEMPORARY INFORMATION SIGNING

NOTES:

1. USE 6" D BLACK LETTERING ON FLUORESCENT ORANGE BACKGROUND.
2. ERECT SIGNS AT LOCATIONS IN ADVANCE OF THE "ROAD CONSTRUCTION AHEAD" SIGNS AS DIRECTED BY THE ENGINEER.
3. ERECT SIGN①WITH INSTALLED PANEL②A MINIMUM OF ONE WEEK PRIOR TO THE START OF THE LANE CLOSURE.
4. REMOVE PANEL②ON THAT DATE.
5. SEE SPECIAL PROVISION "TEMPORARY INFORMATION SIGNING" FOR ADDITIONAL INFORMATION.
6. WILL BE PAID FOR PER SQ FT AS "TEMPORARY INFORMATION SIGNING". EACH SIGN = 21 SQ FT AND THE DATE PANEL②WILL NOT BE MEASURED SEPARATELY FOR PAYMENT.

MODEL: Construction Details [Sheet]
FILE NAME: H:\P2224055 - D3 V-V PTB 211-231224055.001 - IL 47 over CSX RR and Buchanan CN 66M30\CADD\Microstation\CADD Drawings\D366M30-sht-details.dgn

OATES ASSOCIATES
www.oatesassociates.com
ILLINOIS DESIGN FIRM LICENSE NO.: 184.001115

USER NAME = kevin.botterbush	DESIGNED -	REVISED -
	DRAWN -	REVISED -
	CHECKED -	REVISED -
PLOT DATE = 5/19/2026	DATE -	REVISED -

STATE OF ILLINOIS
DEPARTMENT OF TRANSPORTATION

CONSTRUCTION DETAILS

SCALE: | SHEET 1 OF 4 SHEETS | STA. | TO STA.

F.A.P RTE.	SECTION	COUNTY	TOTAL SHEETS	SHEET NO.
326	((111)HB1,HVB1)ES	GRUNDY	137	121
		CONTRACT NO. 66M30		
	ILLINOIS FED. AID PROJECT			

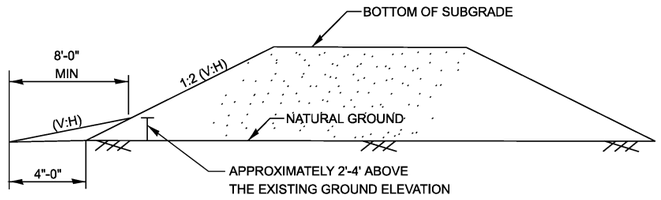

SECTION A-A

NOTES:

- APPLIES TO STRAIGHT OR SKEWED SINGLE STRUCTURES.
- UNDER RESTRICTIVE CONDITIONS, A 1:4 CAN BE USED FOR ANY FACILITY TYPE. SEE FIGURES 3.14.1-1 AND 3.14.1-2 OF THE BRIDGE MANUAL.
- PER BDE 38-4.C, THE RECOMMENDED TRANSVERSE SLOPES ARE AS FOLLOWES.

TYPE OF FACILITY	DESIRABLE (V:H)	ACCEPTABLE (V:H)
FREEWAYS	1:10	1:6
RURAL NON-FREEWAYS*	1:10	1:6
URBAN NON-FREEWAYS*	1:6	1:4
URBAN NON-FREEWAYS**	1:6	1:4

* DESIGN SPEED (V) GREATER THAN OR EQUAL TO 50 MPH.
** DESIGN SPEED (V) LESS THAN OR EQUAL TO 45 MPH.

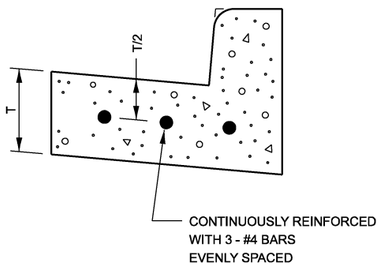

REINFORCEMENT DETAIL FOR COMBINATION CONCRETE CURB AND GUTTER TYPE B-6.24

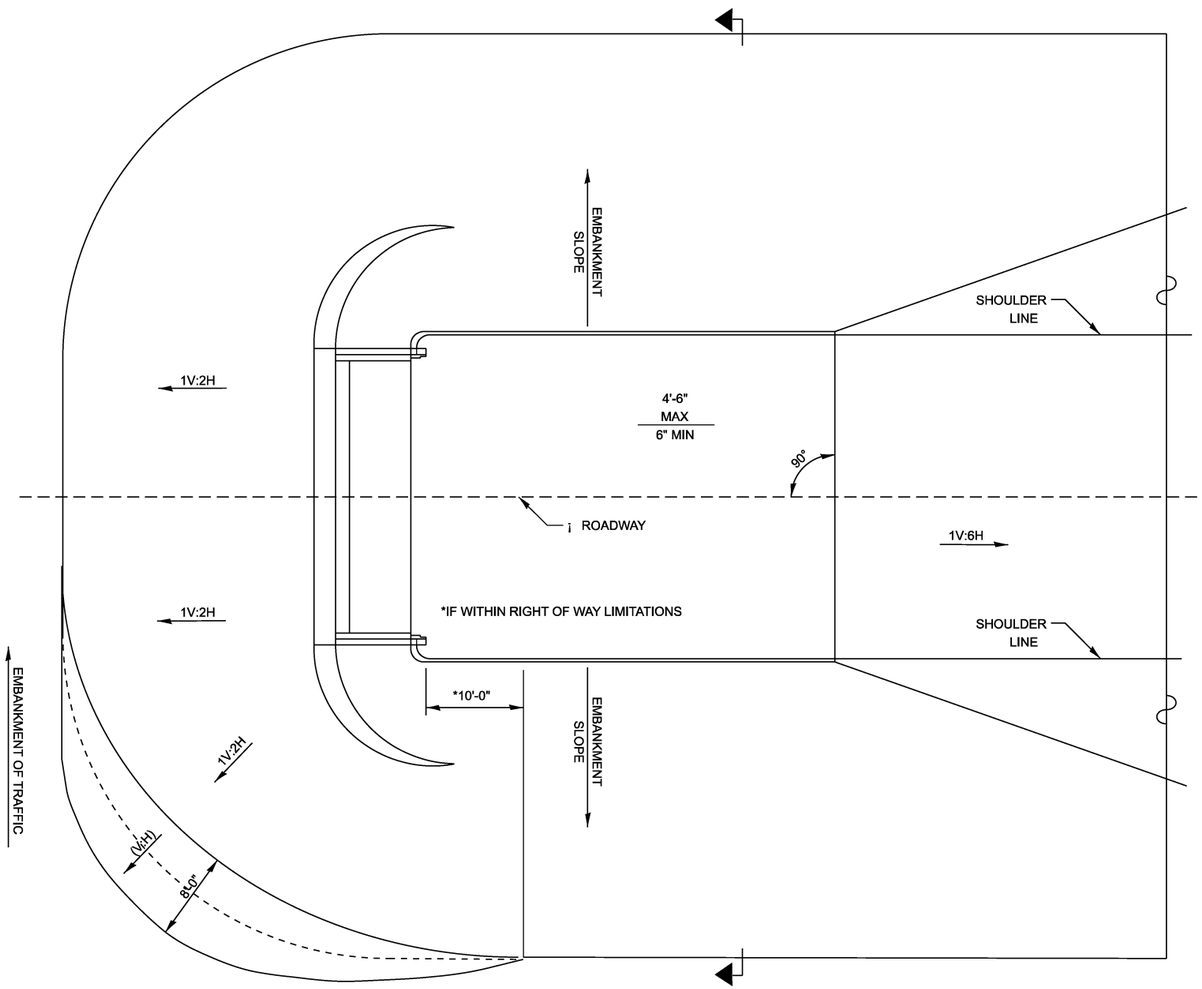

EMBANKMENT CONE DETAIL

MODEL: Untitled-2 [Sheet]
FILE NAME: I:\P\224055 - D3 V-V PTB 211-23\224055.001 - IL 47 over CSX RR and Buchanan CN 66M30\CADD\Microstation\CADD Drawings\D366M30-sht-details.dgn

OATES ASSOCIATES
www.oatesassociates.com
ILLINOIS DESIGN FIRM LICENSE NO.: 184.001115

USER NAME = kevin.botterbush	DESIGNED -	REVISED -	
	DRAWN -	REVISED -	
	CHECKED -	REVISED -	
PLOT DATE = 5/19/2026	DATE -	REVISED -	

STATE OF ILLINOIS
DEPARTMENT OF TRANSPORTATION

CONSTRUCTION DETAILS

SCALE: | SHEET 2 OF 4 SHEETS | STA. | TO STA.

F.A.P RTE.	SECTION	COUNTY	TOTAL SHEETS	SHEET NO.
326	((111)HB1,HVB1)ES	GRUNDY	137	122
		CONTRACT NO. 66M30		
	ILLINOIS FED. AID PROJECT			

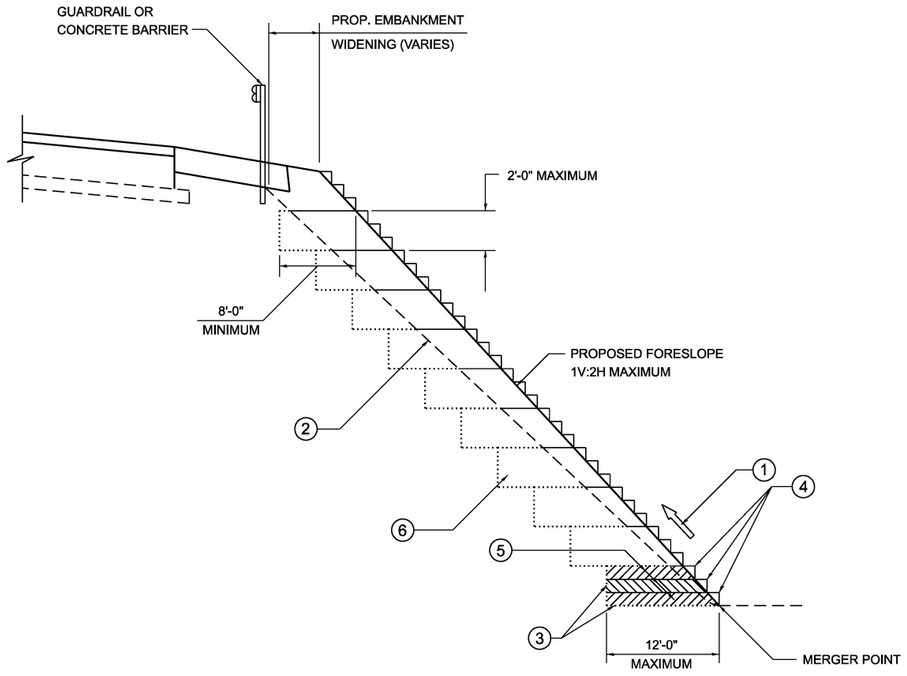

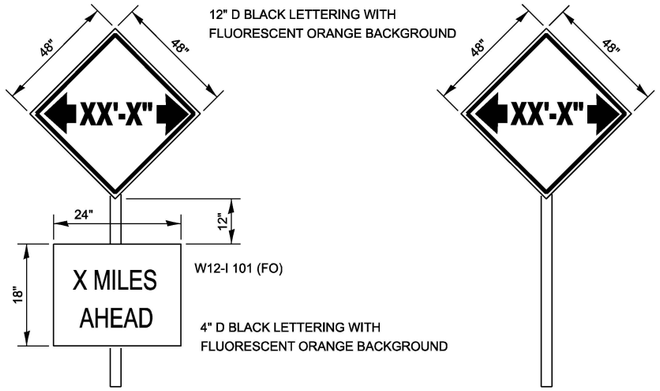

TO BE POST MOUNTED AS SHOWN ELSEWHERE IN THE PLANS.

COST OF SUPPLYING, INSTALLING, MAINTAINING AND REMOVING WIDTH RESTRICTION SIGNS SHALL BE INCLUDED IN THE COST OF THE TRAFFIC CONTROL AND PROTECTION PAY ITEMS.

WIDTH RESTRICTION SIGNING DETAILS

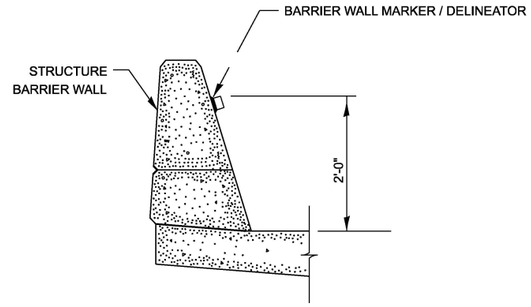

BARRIER WALL MARKER

TYPICAL BENCHING DETAIL FOR EMBANKMENT

NOTES:

1. CONSTRUCT SUCCEEDING BENCH CUTS AND EMBANKMENT PLACEMENT AND COMPACTION FROM BOTTOM TO TOP IN STAIRSTEP FASHION.
2. EXISTING FORESLOPE PREPARED IN ACCORDANCE WITH ARTICLE 205.03 OF THE STANDARD SPECIFICATIONS.
3. BENCH CUT EXISTING SLOPE TYPICAL FOR EACH STEP.
4. TRIM TO FINAL SLOPE.
5. EQUAL 8-INCH LIFTS OF EMBANKMENT COMPACTED IN ACCORDANCE WITH ARTICLE 205.05 OF THE STANDARD SPECIFICATIONS.
6. EXCAVATION OF BENCH CUTS WITHIN EXISTING EMBANKMENT WILL BE INCLUDED IN THE COST OF FURNISHED EXCAVATION.
7. SLOPES SHALL BE BENCHED ACCORDING TO THIS DETAIL WHEN THE SLOPE IS STEEPER THAN 1V:4H AND THE HEIGHT IS GREATER THAN 5'.

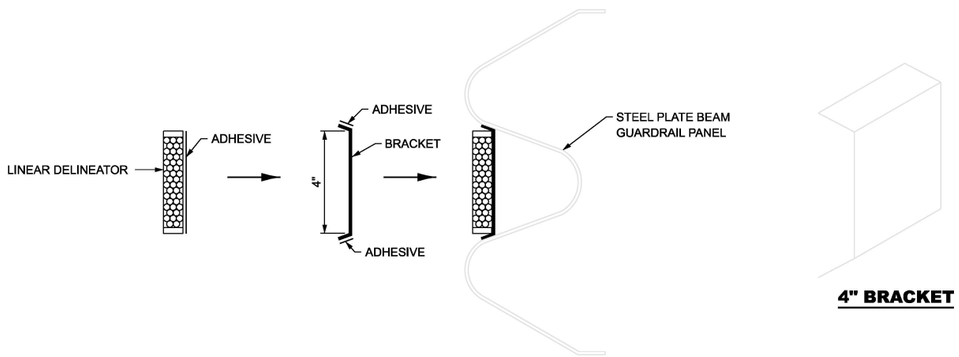

LINEAR DELINEATOR APPLICATION TO STANDARD GALVANIZED GUARDRAIL

LINEATOR DELINEATOR SHALL BE APLLIED ACCORDING TO THE MANUFACTURER'S RECOMMENDATIONS

MODEL: Untitled-3 [Sheet]
FILE NAME: H:\P\224055 - D3 V-V PTB 211-23\224055.001 - IL 47 over CSX RR and Buchanan CN 66M30\CADD\Microstation\CADD Drawings\D366M30-sht-details.dgn

OATES ASSOCIATES
www.oatesassociates.com
ILLINOIS DESIGN FIRM LICENSE NO.: 184.001115

USER NAME = kevin.botterbush	DESIGNED -	REVISED -	
	DRAWN -	REVISED -	
	CHECKED -	REVISED -	
PLOT DATE = 5/19/2026	DATE -	REVISED -	

STATE OF ILLINOIS
DEPARTMENT OF TRANSPORTATION

CONSTRUCTION DETAILS

SCALE: | SHEET 3 OF 4 SHEETS | STA. | TO STA.

F.A.P RTE.	SECTION	COUNTY	TOTAL SHEETS	SHEET NO.
326	((111)HB1,HVB1)ES	GRUNDY	137	123
		CONTRACT NO. 66M30		
	ILLINOIS	FED. AID PROJECT		

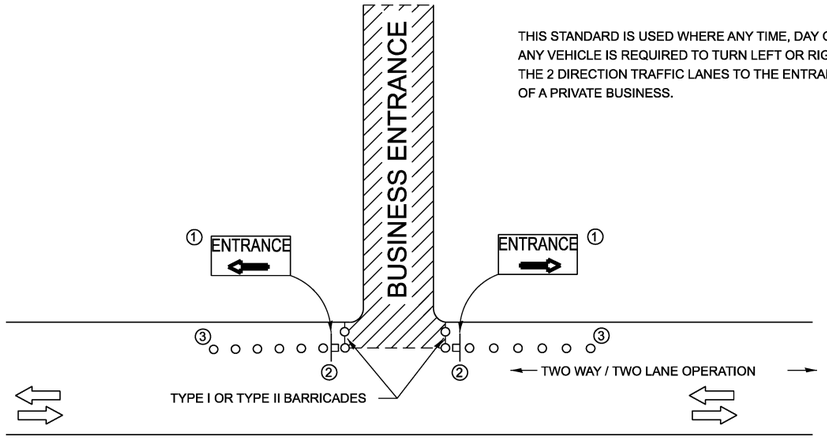

THIS STANDARD IS USED WHERE ANY TIME, DAY OR NIGHT, ANY VEHICLE IS REQUIRED TO TURN LEFT OR RIGHT FROM THE 2 DIRECTION TRAFFIC LANES TO THE ENTRANCE ZONE OF A PRIVATE BUSINESS.

SYMBOLS

- BUSINESS ENTRANCE ZONE
- BARRICADE OR DRUM WITH FLASHING LIGHT
- SIGN ON TEMPORARY SUPPORT

① REFER TO BUSINESS ENTRANCE SIGN TABLE FOR DIMENSIONS.

② SEE "SIGNS ON TEMPORARY SUPPORTS" DETAIL.

③ DRUMS

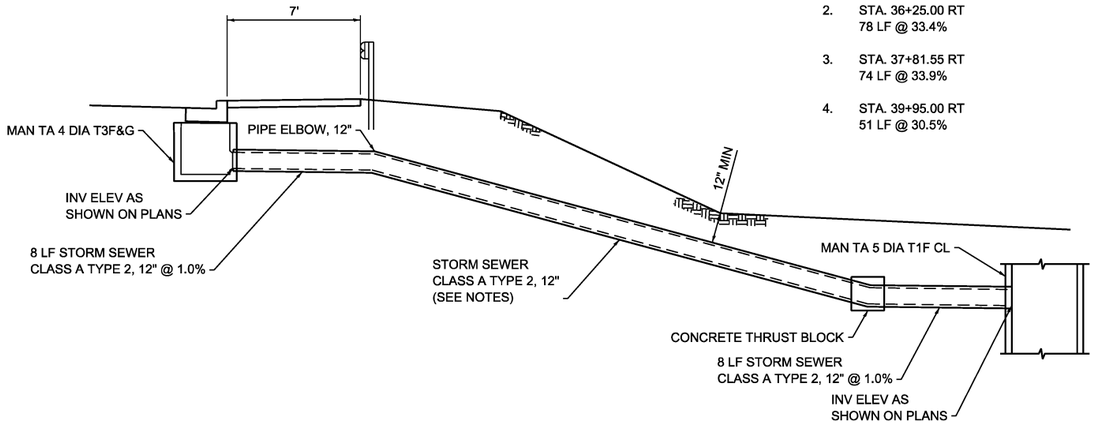

NOTES:

1. STA. 31+15.00 RT
   55 LF @ 36.3%
2. STA. 36+25.00 RT
   78 LF @ 33.4%
3. STA. 37+81.55 RT
   74 LF @ 33.9%
4. STA. 39+95.00 RT
   51 LF @ 30.5%

12" STORM SEWER DETAIL

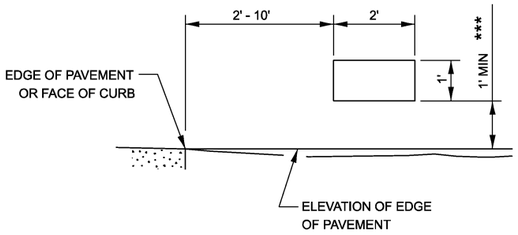

SIGNS ON TEMPORARY SUPPORTS

*** WHEN WORK OPERATIONS EXCEED FOUR DAYS, THIS DIMENSION SHALL BE 5' MIN IF LOCATED BEHIND OTHER DEVICES, THE HEIGHT SHALL BE SUFFICIENT TO BE SEEN BY MOTORISTS.

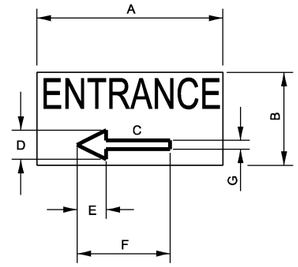

BUSINESS ENTRANCE SIGN

4" BLUE LETTERING NON-REFLECTIVE WITH WHITE REFLECTIVE BACKGROUND

SIGN SIZE	DIMENSIONS						
	A	B	C	D	E	F	G
24 X 12	24	12	8.25	4.75	3.75	12	2.25

SIGNS FOR BUSINESSES ABUTTING THE WORK ZONE, DELINEATING THE WAY THROUGH THE BARRICADES TO RESPECTIVE ENTRANCES.

BUSINESS ABUTTING WORK ZONE ENTRANCE SIGN

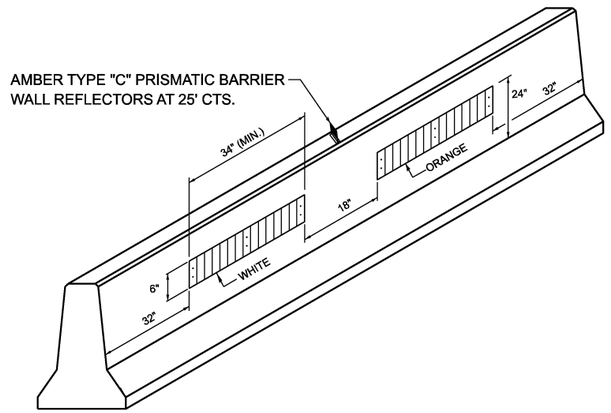

LINEAR DELINEATOR PANELS FOR TEMPORARY CONCRETE BARRIER

MODEL: Untitled-4 [Sheet]
FILE NAME: H:\P224055 - D3 V-V PTB 211-23224055.001 - IL 47 over CSX RR and Buchanan CN 66M30\CADD\Microstation\CADD Drawings\D366M30-snt-details.dgn

OATES ASSOCIATES
www.oatesassociates.com
ILLINOIS DESIGN FIRM LICENSE NO.: 184.001115

USER NAME = kevin.botterbush	DESIGNED -	REVISED -
	DRAWN -	REVISED -
	CHECKED -	REVISED -
PLOT DATE = 5/20/2026	DATE -	REVISED -

STATE OF ILLINOIS
DEPARTMENT OF TRANSPORTATION

CONSTRUCTION DETAILS

SCALE: | SHEET 4 OF 4 SHEETS | STA. | TO STA.

F.A.P RTE.	SECTION	COUNTY	TOTAL SHEETS	SHEET NO.
326	((111)HB1,HVB1)ES	GRUNDY	137	124
		CONTRACT NO. 66M30		
	ILLINOIS	FED. AID PROJECT		

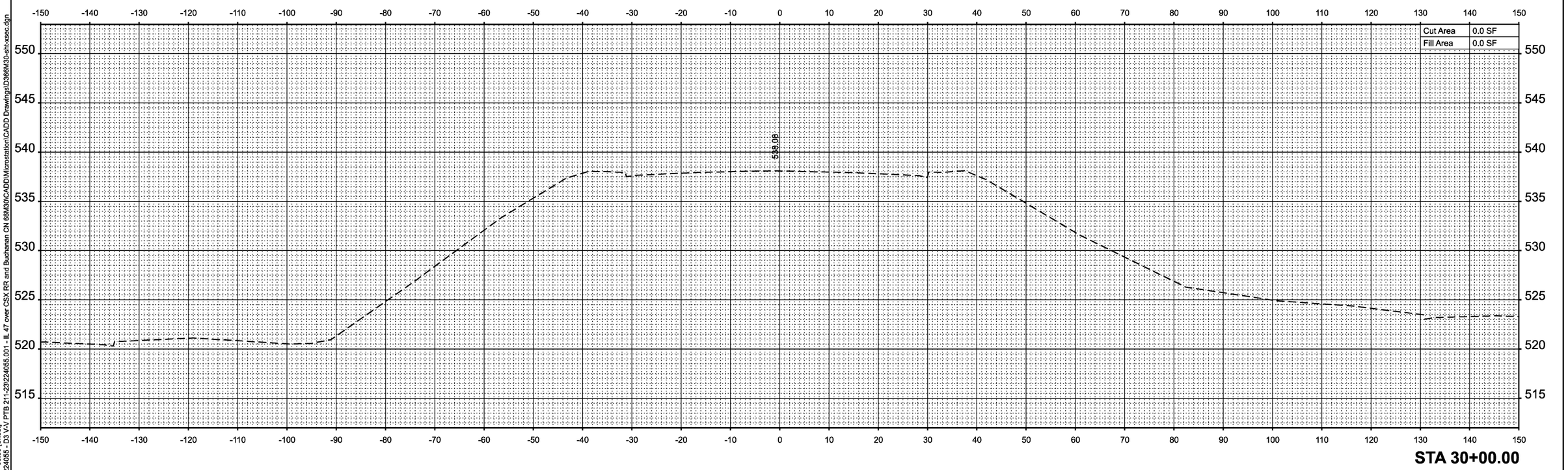

STA 30+00.00

MODEL: ExCL - 30+00.00 [Sheet]
FILE NAME: H:\P\224055 - D3 V-V PTB 211-23\224055.001 - IL 47 over CSX RR and Buchanan CN 66M30\CADD\Microstation\CADD Drawings\D366M30-slit-xsec.dgn

OATES ASSOCIATES
www.oatesassociates.com
ILLINOIS DESIGN FIRM LICENSE NO.: 184.001115

USER NAME = kevin.botterbush	DESIGNED -	REVISED -
	DRAWN -	REVISED -
	CHECKED -	REVISED -
PLOT DATE = 5/19/2026	DATE -	REVISED -

STATE OF ILLINOIS
DEPARTMENT OF TRANSPORTATION

CROSS SECTIONS

SCALE: 1"=10' | SHEET 1 OF 13 SHEETS | STA. | TO STA.

F.A.P RTE.	SECTION	COUNTY	TOTAL SHEETS	SHEET NO.
326	((111)HB1,HVB1)ES	GRUNDY	137	125
		CONTRACT NO. 66M30		
	ILLINOIS	FED. AID PROJECT		

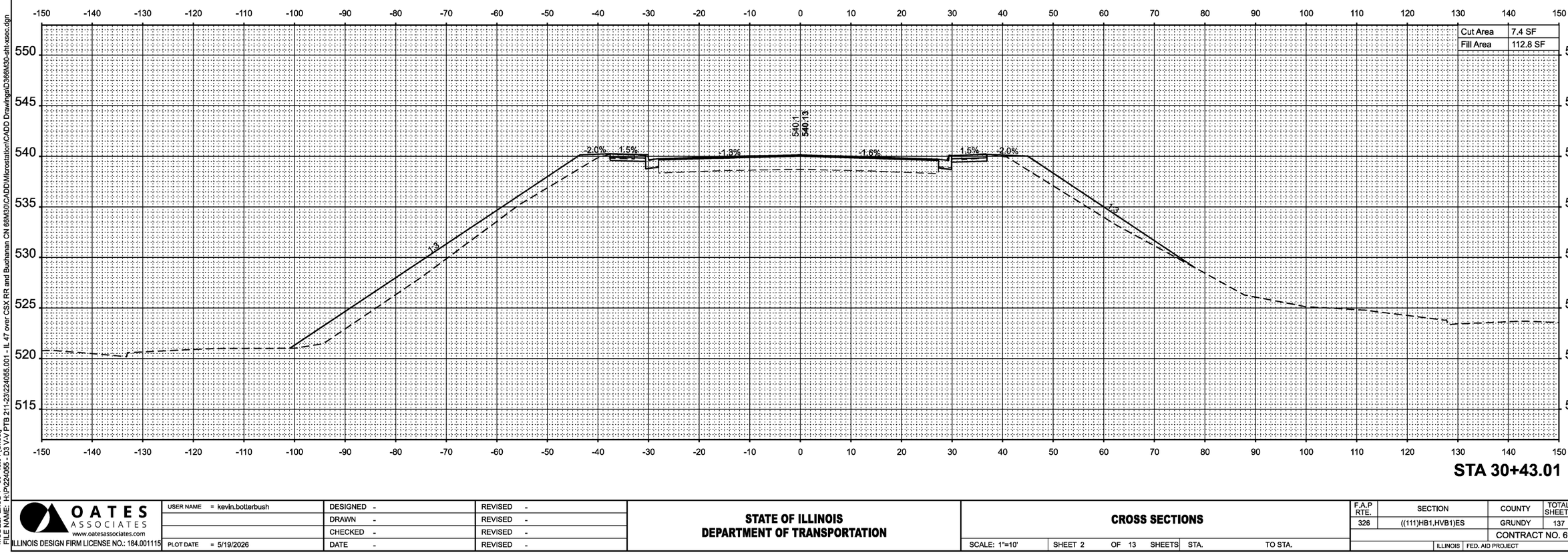

STA 30+43.01

MODEL: ExCL-1 - 30+43.01 [Sheet]
FILE NAME: H:\P\224055 - D3 V-V PTB 211-23\224055.001 - IL 47 over CSX RR and Buchanan CN 66M30\CADD\Microstation\CADD Drawings\D366M30-slit-xsec.dgn

OATES ASSOCIATES
www.oatesassociates.com
ILLINOIS DESIGN FIRM LICENSE NO.: 184.001115

USER NAME = kevin.botterbush	DESIGNED -	REVISED -
	DRAWN -	REVISED -
	CHECKED -	REVISED -
PLOT DATE = 5/19/2026	DATE -	REVISED -

STATE OF ILLINOIS
DEPARTMENT OF TRANSPORTATION

CROSS SECTIONS

SCALE: 1"=10' | SHEET 2 OF 13 SHEETS | STA. | TO STA.

F.A.P RTE.	SECTION	COUNTY	TOTAL SHEETS	SHEET NO.
326	((111)HB1,HVB1)ES	GRUNDY	137	126
		CONTRACT NO. 66M30		
	ILLINOIS	FED. AID PROJECT		

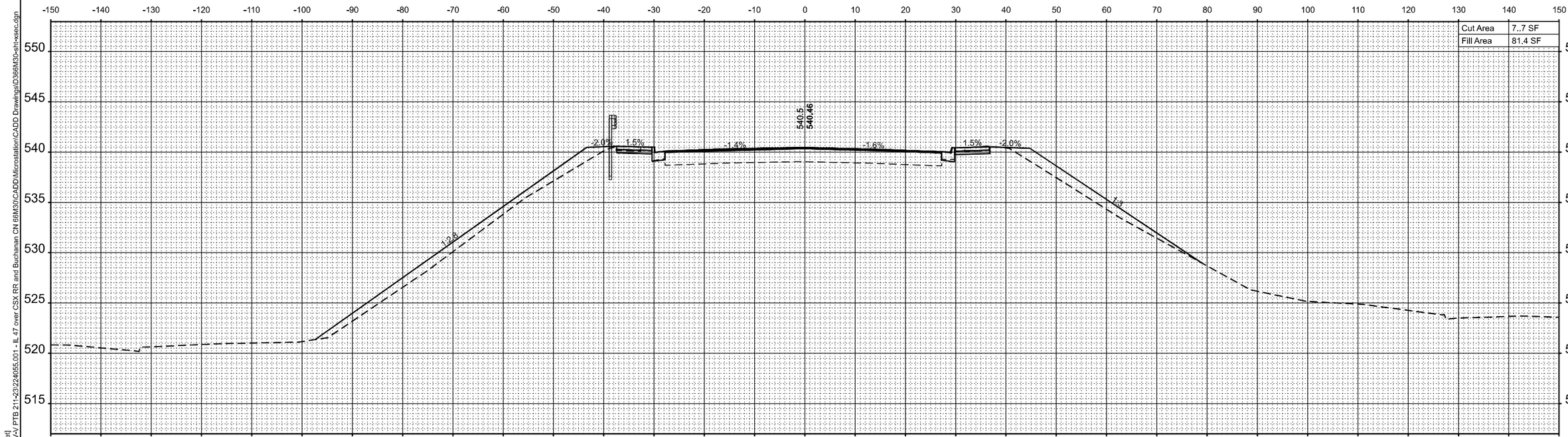

STA 30+50.00

MODEL: ExCL - 30+50.00 [Sheet]
FILE NAME: H:\P2224055 - D3 V-V PTB 211-223\2224055.001 - IL 47 over CSX RR and Buchanan CN 66M30\CADD\Microstation\CADD Drawings\D366M30-sht-xsec.dgn

OATES ASSOCIATES
www.oatesassociates.com
ILLINOIS DESIGN FIRM LICENSE NO.: 184.001115

USER NAME = kevin.botterbush	DESIGNED -	REVISED -
	DRAWN -	REVISED -
	CHECKED -	REVISED -
PLOT DATE = 5/19/2026	DATE -	REVISED -

STATE OF ILLINOIS
DEPARTMENT OF TRANSPORTATION

CROSS SECTIONS

SCALE: 1"=10' | SHEET 3 OF 13 SHEETS | STA. | TO STA.

F.A.P RTE.	SECTION	COUNTY	TOTAL SHEETS	SHEET NO.
326	((111)HB1,HVB1)ES	GRUNDY	137	127
		CONTRACT NO. 66M30		
		ILLINOIS	FED. AID PROJECT	

BRIDGE OMISSION STA. 31+70.14 TO STA. 35+66.54

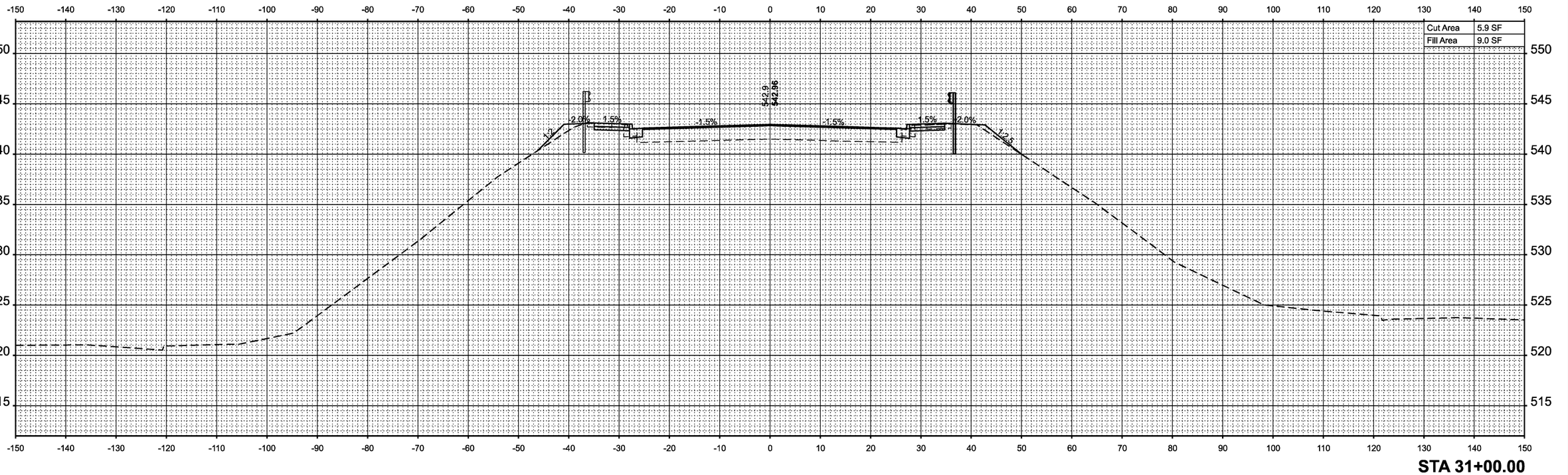

STA 31+00.00

MODEL: ExCL - 31+00.00 [Sheet]
FILE NAME: H:\P224055 - D3 V-V PTB 211-23\224055.001 - IL 47 over CSX RR and Buchanan CN 66M30\CADD\Microstation\CADD Drawings\D366M30-sht-xsec.dgn

OATES ASSOCIATES
www.oatesassociates.com
ILLINOIS DESIGN FIRM LICENSE NO.: 184.001115

USER NAME = kevin.botterbush	DESIGNED -	REVISED -
	DRAWN -	REVISED -
	CHECKED -	REVISED -
PLOT DATE = 5/19/2026	DATE -	REVISED -

STATE OF ILLINOIS
DEPARTMENT OF TRANSPORTATION

CROSS SECTIONS

SCALE: 1"=10' | SHEET 4 OF 13 SHEETS | STA. | TO STA.

F.A.P RTE.	SECTION	COUNTY	TOTAL SHEETS	SHEET NO.
326	((111)HB1,HVB1)ES	GRUNDY	137	128
		CONTRACT NO. 66M30		
		ILLINOIS	FED. AID PROJECT	

BRIDGE OMISSION STA. 31+70.14 TO STA. 35+66.54

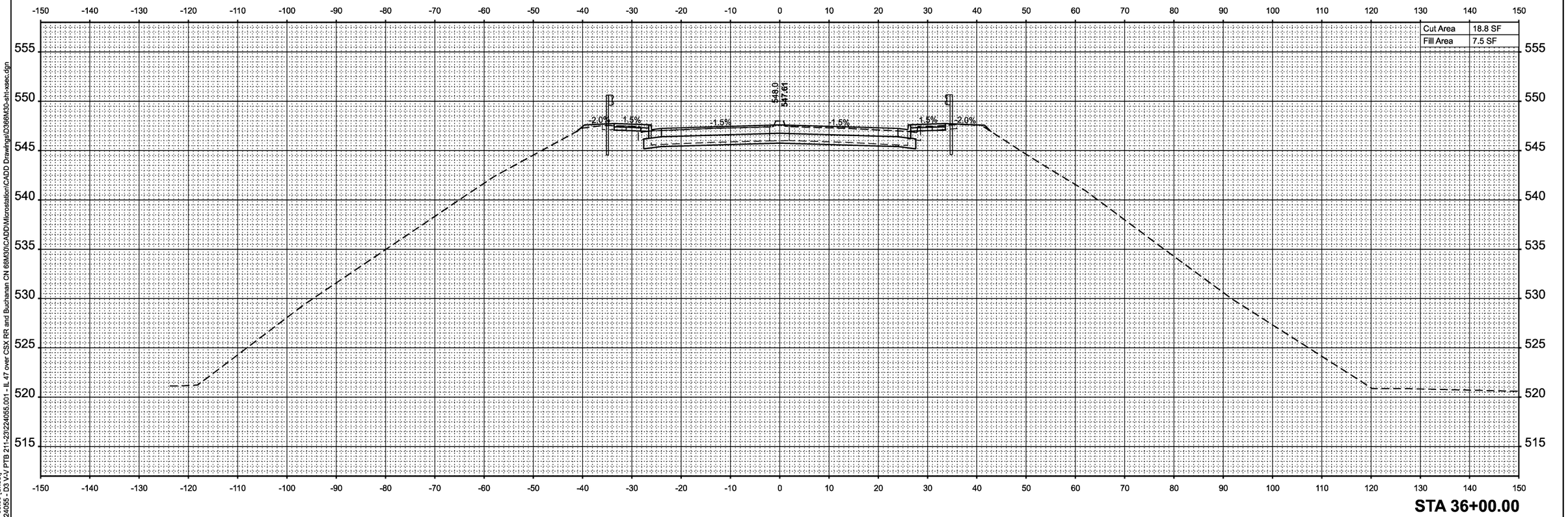

STA 36+00.00

MODEL: ExCL - 36+00.00 [Sheet]
FILE NAME: H:\P224055 - D3 V-V PTB 211-2\224055.001 - IL 47 over CSX RR and Buchanan CN 66M30\CADD\Microstation\CADD Drawings\D366M30-sht-xsec.dgn

OATES ASSOCIATES
www.oatesassociates.com
ILLINOIS DESIGN FIRM LICENSE NO.: 184.001115

USER NAME = kevin.botterbush	DESIGNED -	REVISED -
	DRAWN -	REVISED -
	CHECKED -	REVISED -
PLOT DATE = 5/19/2026	DATE -	REVISED -

STATE OF ILLINOIS
DEPARTMENT OF TRANSPORTATION

CROSS SECTIONS

SCALE: 1"=10' | SHEET 5 OF 13 SHEETS | STA. | TO STA.

F.A.P RTE.	SECTION	COUNTY	TOTAL SHEETS	SHEET NO.
326	((111)HB1,HVB1)ES	GRUNDY	137	129
		CONTRACT NO. 66M30		
		ILLINOIS	FED. AID PROJECT	

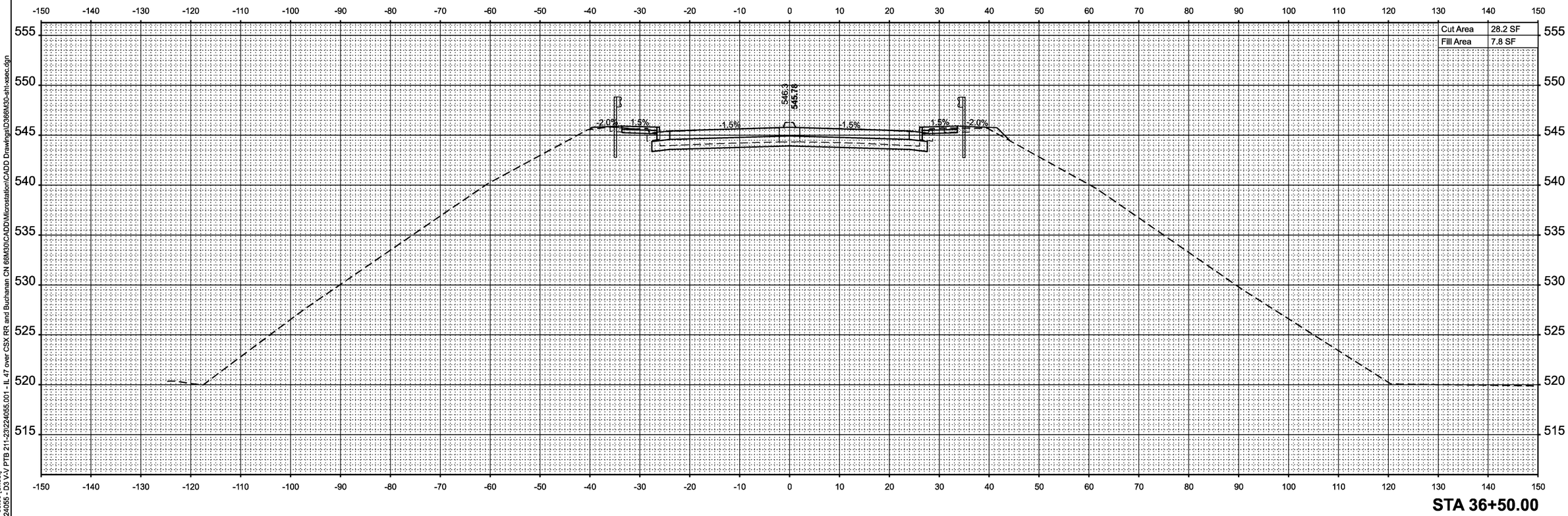

STA 36+50.00

MODEL: ExCL - 36+50.00 [Sheet]
FILE NAME: h:\P224055 - D3 V-V PTB 211-23\224055.001 - IL 47 over CSX RR and Buchanan CN 66M30\CADD\Microstation\CADD Drawings\D366M30-sht-xsec.dgn

OATES ASSOCIATES
www.oatesassociates.com
ILLINOIS DESIGN FIRM LICENSE NO.: 184.001115

USER NAME = kevin.botterbush	DESIGNED -	REVISED -
	DRAWN -	REVISED -
	CHECKED -	REVISED -
PLOT DATE = 5/19/2026	DATE -	REVISED -

STATE OF ILLINOIS
DEPARTMENT OF TRANSPORTATION

CROSS SECTIONS

SCALE: 1"=10' | SHEET 6 OF 13 SHEETS | STA. | TO STA.

F.A.P RTE.	SECTION	COUNTY	TOTAL SHEETS	SHEET NO.
326	((111)HB1,HVB1)ES	GRUNDY	137	130
		CONTRACT NO. 66M30		
	ILLINOIS	FED. AID PROJECT		

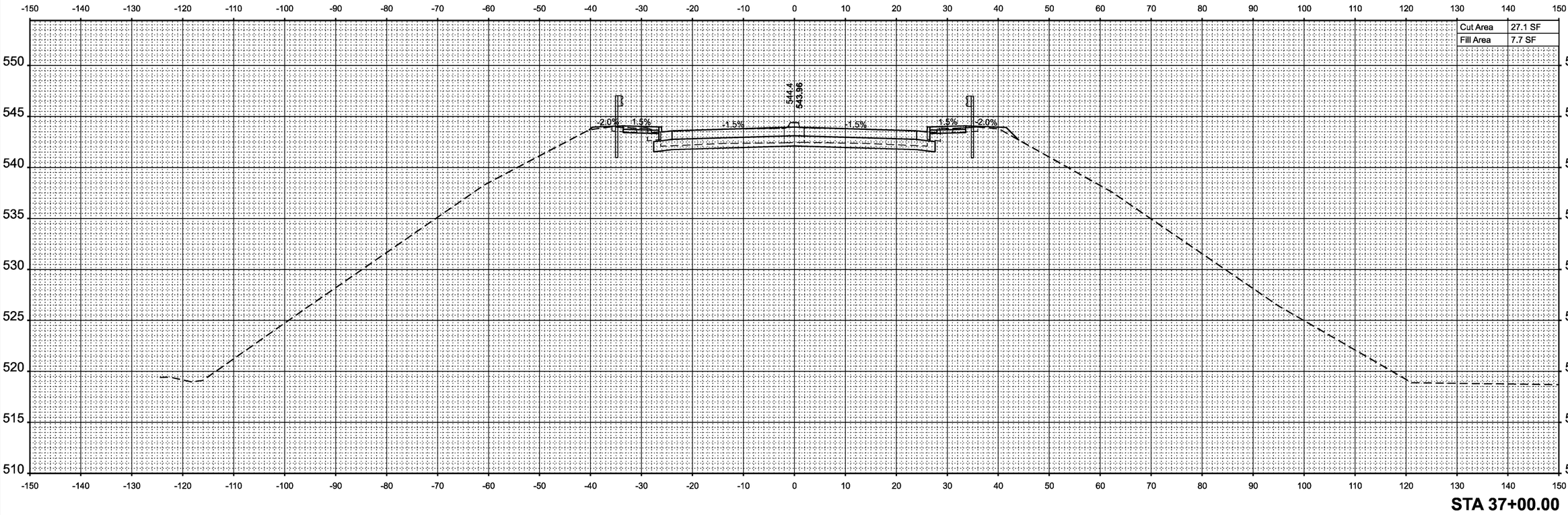

STA 37+00.00

MODEL: ExCL - 37+00.00 [Sheet]
FILE NAME: H:\P224055 - D3 V-V PTB 211-23\224055.001 - IL 47 over CSX RR and Buchanan CN 66M30\CADD\Microstation\CADD Drawings\D366M30-sht-xsec.dgn

OATES ASSOCIATES
www.oatesassociates.com
ILLINOIS DESIGN FIRM LICENSE NO.: 184.001115

USER NAME = kevin.botterbush	DESIGNED -	REVISED -
	DRAWN -	REVISED -
	CHECKED -	REVISED -
PLOT DATE = 5/19/2026	DATE -	REVISED -

STATE OF ILLINOIS
DEPARTMENT OF TRANSPORTATION

CROSS SECTIONS

SCALE: 1"=10' | SHEET 7 OF 13 SHEETS | STA. | TO STA.

F.A.P RTE.	SECTION	COUNTY	TOTAL SHEETS	SHEET NO.
326	((111)HB1,HVB1)ES	GRUNDY	137	131
		CONTRACT NO. 66M30		
	ILLINOIS FED. AID PROJECT			

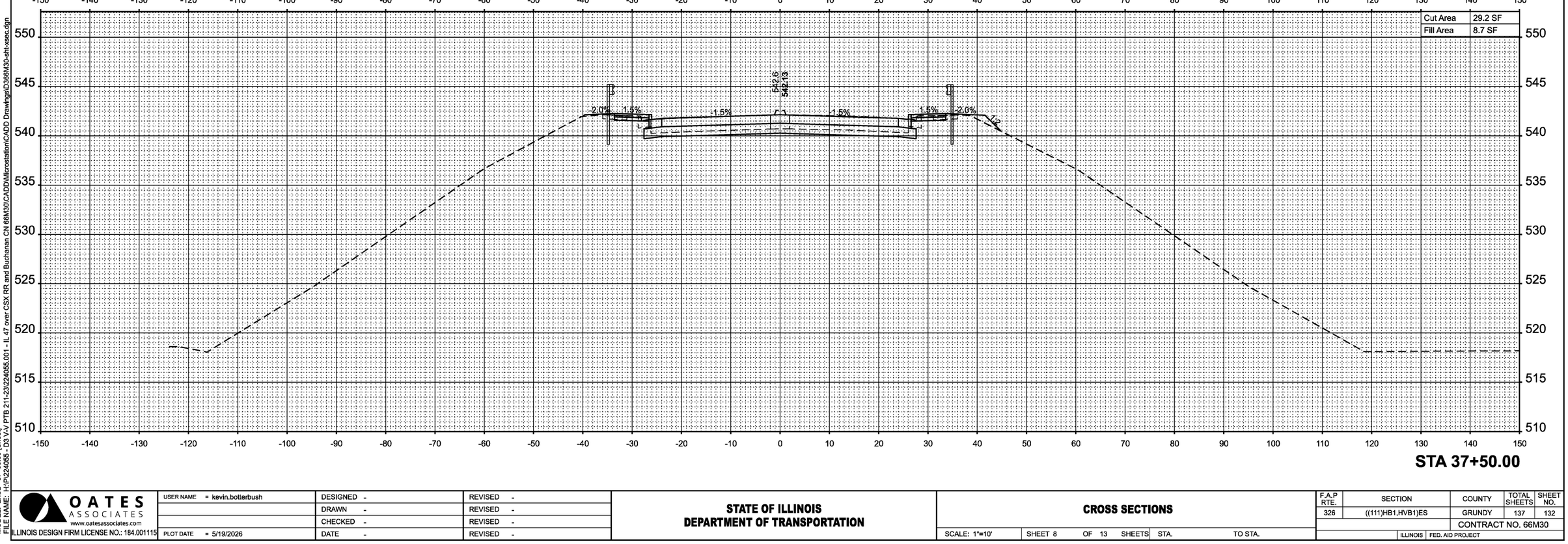

MODEL: ExCL - 37+50.00 [Sheet]
FILE NAME: H:\P\224055 - D3 V-V PTB 211-23\224055.001 - IL 47 over CSX RR and Buchanan CN 66M30\CADD\Microstation\CADD Drawings\D366M30-sht-xsec.dgn

OATES ASSOCIATES
www.oatesassociates.com
ILLINOIS DESIGN FIRM LICENSE NO.: 184.001115

USER NAME = kevin.botterbush	DESIGNED -	REVISED -
	DRAWN -	REVISED -
	CHECKED -	REVISED -
PLOT DATE = 5/19/2026	DATE -	REVISED -

STATE OF ILLINOIS
DEPARTMENT OF TRANSPORTATION

CROSS SECTIONS

SCALE: 1"=10' | SHEET 8 OF 13 SHEETS | STA. | TO STA.

F.A.P RTE.	SECTION	COUNTY	TOTAL SHEETS	SHEET NO.
326	((111)HB1,HVB1)ES	GRUNDY	137	132
		CONTRACT NO. 66M30		
		ILLINOIS	FED. AID PROJECT	

BRIDGE OMISSION STA. 38+35.25 TO STA. 39+56.75

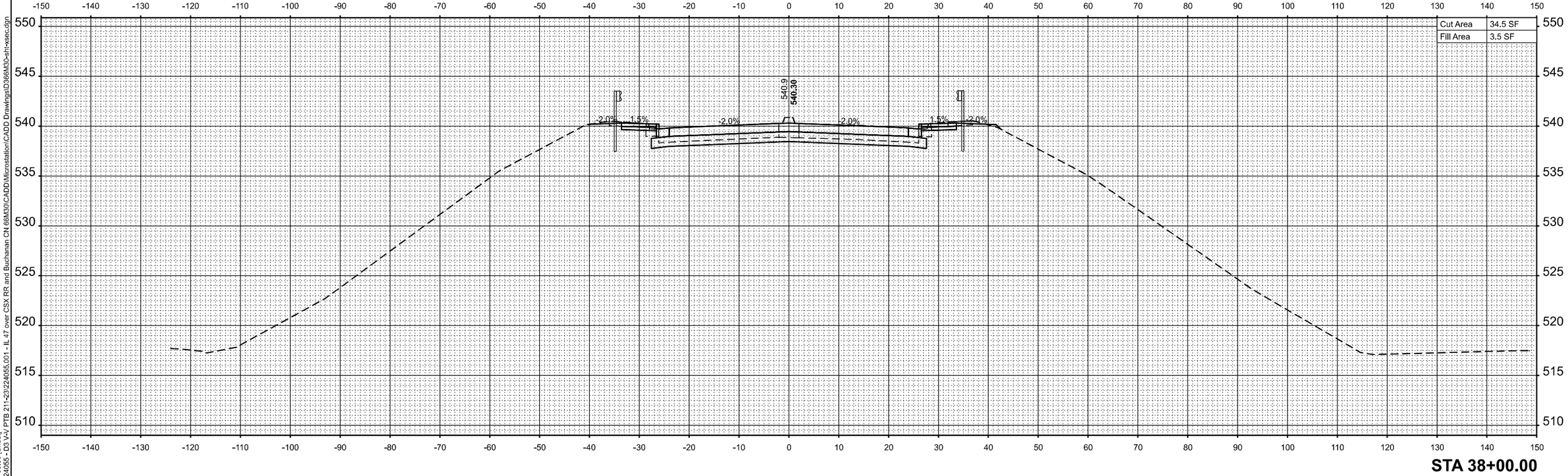

STA 38+00.00

MODEL: ExCL - 38+00.00 [Sheet]
FILE NAME: H:\P224055 - D2 V-V PTB 211-23\224055.001 - IL 47 over CSX RR and Buchanan CN 66M30\CADD\Microstation\CADD Drawings\D366M30-sht-xsec.dgn

OATES ASSOCIATES
www.oatesassociates.com
ILLINOIS DESIGN FIRM LICENSE NO.: 184.001115

USER NAME = kevin.botterbush	DESIGNED -	REVISED -
	DRAWN -	REVISED -
	CHECKED -	REVISED -
PLOT DATE = 5/19/2026	DATE -	REVISED -

STATE OF ILLINOIS
DEPARTMENT OF TRANSPORTATION

CROSS SECTIONS

SCALE: 1"=10' | SHEET 9 OF 13 SHEETS | STA. | TO STA.

F.A.P RTE.	SECTION	COUNTY	TOTAL SHEETS	SHEET NO.
326	((111)HB1,HVB1)ES	GRUNDY	137	133
		CONTRACT NO. 66M30		
		ILLINOIS	FED. AID PROJECT	

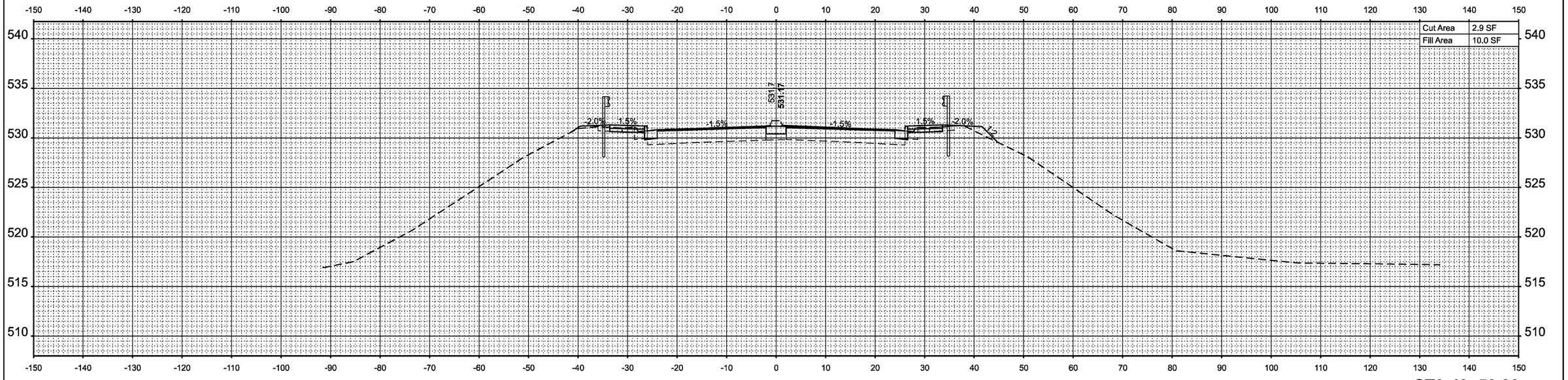

STA 40+50.00

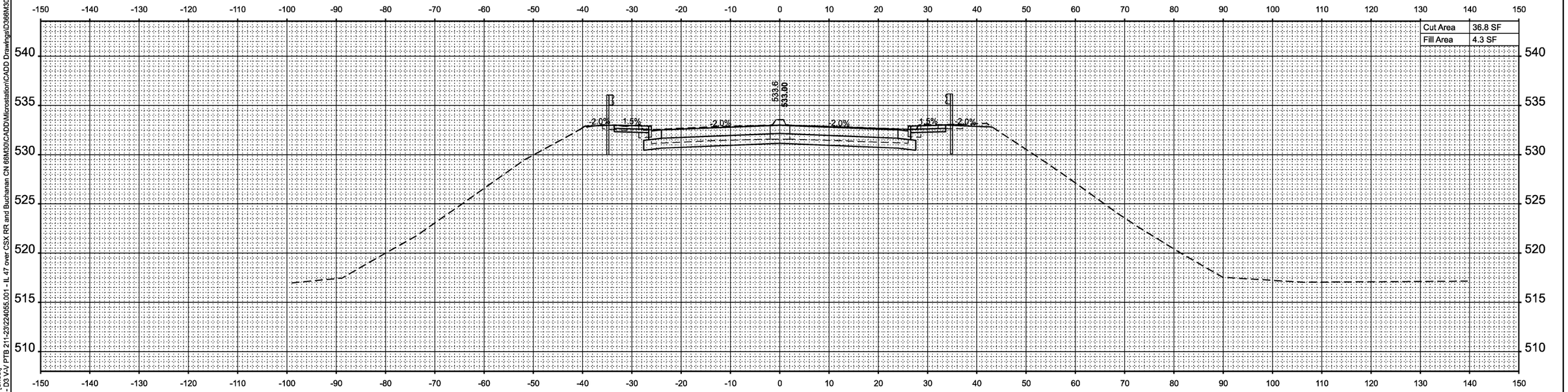

STA 40+00.00

MODEL: ExCL - 40+00.00 [Sheet]
FILE NAME: H:\P224055 - D3 V-V PTB 211-23\224055.001 - IL 47 over CSX RR and Buchanan CN 66M30\CADD\Microstation\CADD Drawings\D366M30-eth-xsec.dgn

OATES ASSOCIATES
www.oatesassociates.com
ILLINOIS DESIGN FIRM LICENSE NO.: 184.001115

USER NAME = kevin.botterbush	DESIGNED -	REVISED -
	DRAWN -	REVISED -
	CHECKED -	REVISED -
PLOT DATE = 5/19/2026	DATE -	REVISED -

STATE OF ILLINOIS
DEPARTMENT OF TRANSPORTATION

CROSS SECTIONS

SCALE: 1"=10' | SHEET 10 OF 13 SHEETS | STA. | TO STA.

F.A.P RTE.	SECTION	COUNTY	TOTAL SHEETS	SHEET NO.
326	((111)HB1,HVB1)ES	GRUNDY	137	134
		CONTRACT NO. 66M30		
		ILLINOIS	FED. AID PROJECT	

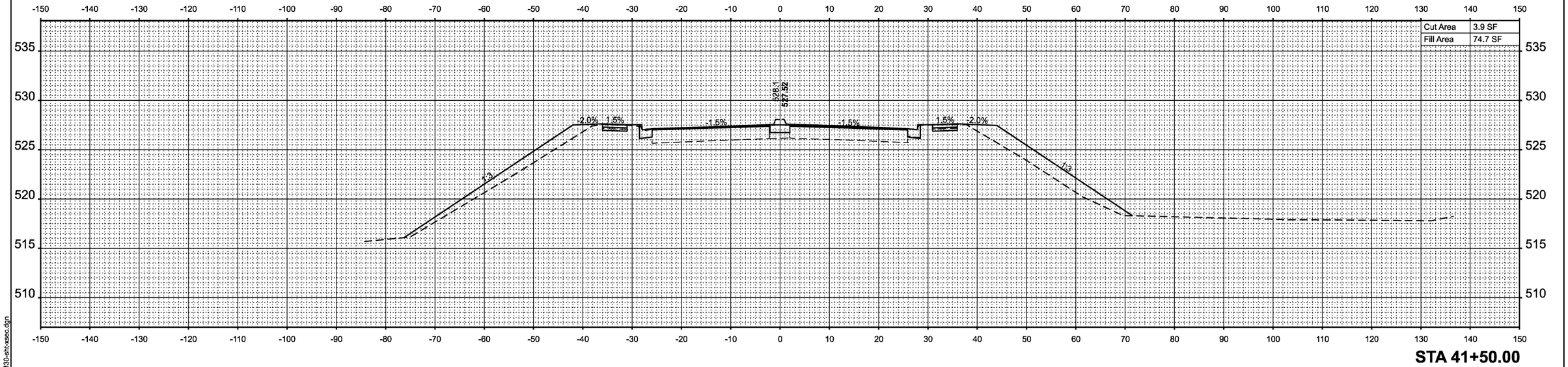

STA 41+50.00

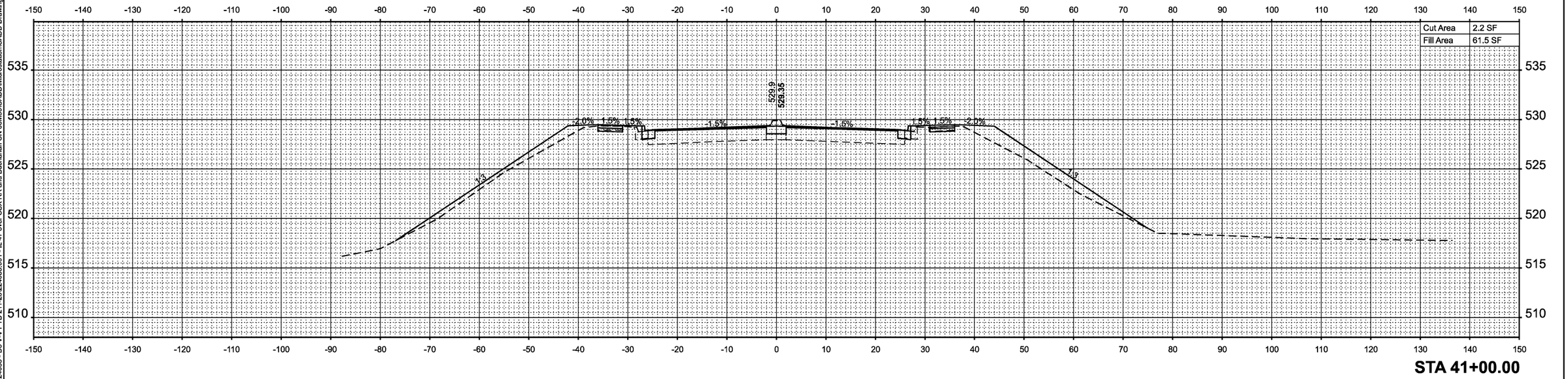

STA 41+00.00

MODEL: ExCL - 41+00.00 [Sheet]
FILE NAME: H:\P\224055 - D3 V-V PTB 211-23\224055.001 - IL 47 over CSX RR and Buchanan CN 66M30\CADD\Microstation\CADD Drawings\D366M30-sht-xsec.dgn

OATES ASSOCIATES
www.oatesassociates.com
ILLINOIS DESIGN FIRM LICENSE NO.: 184.001115

USER NAME = kevin.botterbush	DESIGNED -	REVISED -
	DRAWN -	REVISED -
	CHECKED -	REVISED -
PLOT DATE = 5/19/2026	DATE -	REVISED -

STATE OF ILLINOIS
DEPARTMENT OF TRANSPORTATION

CROSS SECTIONS

SCALE: 1"=10' | SHEET 11 OF 13 SHEETS | STA. | TO STA.

F.A.P RTE.	SECTION	COUNTY	TOTAL SHEETS	SHEET NO.
326	((111)HB1,HVB1)ES	GRUNDY	137	135
		CONTRACT NO. 66M30		
		ILLINOIS	FED. AID PROJECT	

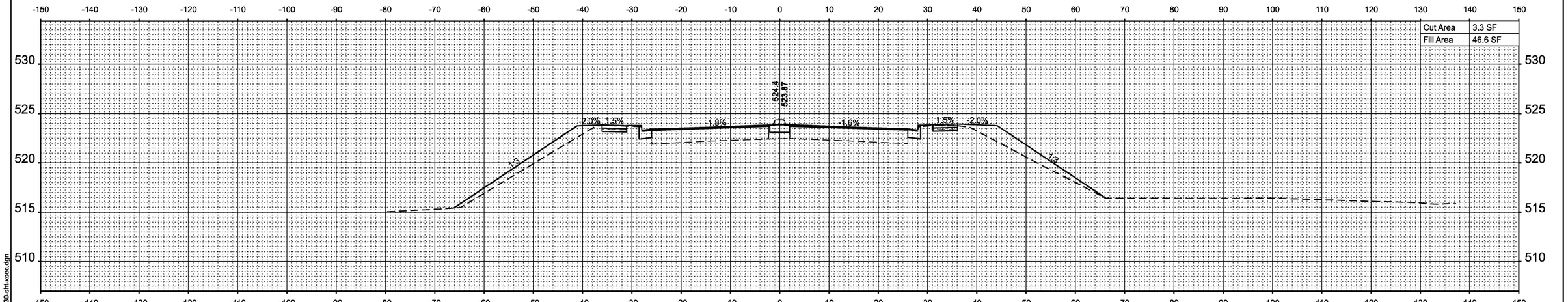

STA 42+50.00

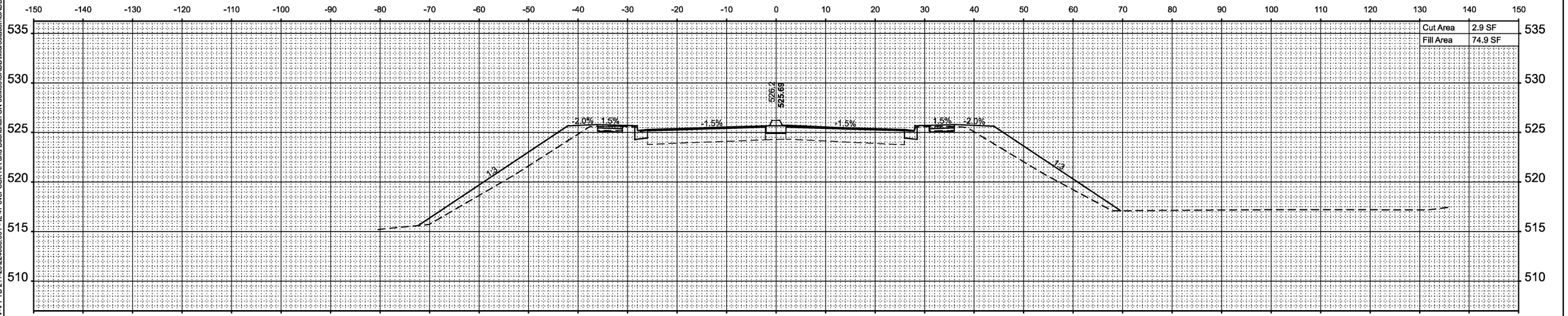

STA 42+00.00

MODEL: ExCL - 42+00.00 [Sheet]
FILE NAME: H:\P224055 - D3 V-V PTB 211-23\224055.001 - IL 47 over CSX RR and Buchanan CN 66M30\CADD\MicrostationCADD Drawings\D366M30-sht-xsec.dgn

OATES ASSOCIATES
www.oatesassociates.com
ILLINOIS DESIGN FIRM LICENSE NO.: 184.001115

USER NAME = kevin.botterbush	DESIGNED -	REVISED -
	DRAWN -	REVISED -
	CHECKED -	REVISED -
PLOT DATE = 5/19/2026	DATE -	REVISED -

STATE OF ILLINOIS
DEPARTMENT OF TRANSPORTATION

CROSS SECTIONS

SCALE: 1"=10' | SHEET 12 OF 13 SHEETS | STA. | TO STA.

F.A.P RTE.	SECTION	COUNTY	TOTAL SHEETS	SHEET NO.
326	((111)HB1,HVB1)ES	GRUNDY	137	136
		CONTRACT NO. 66M30		
	ILLINOIS	FED. AID PROJECT		

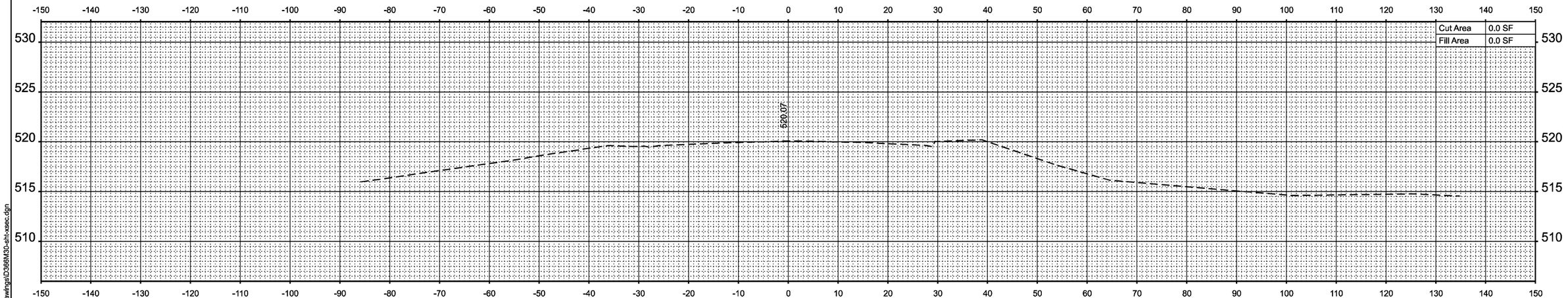

STA 43+50.00

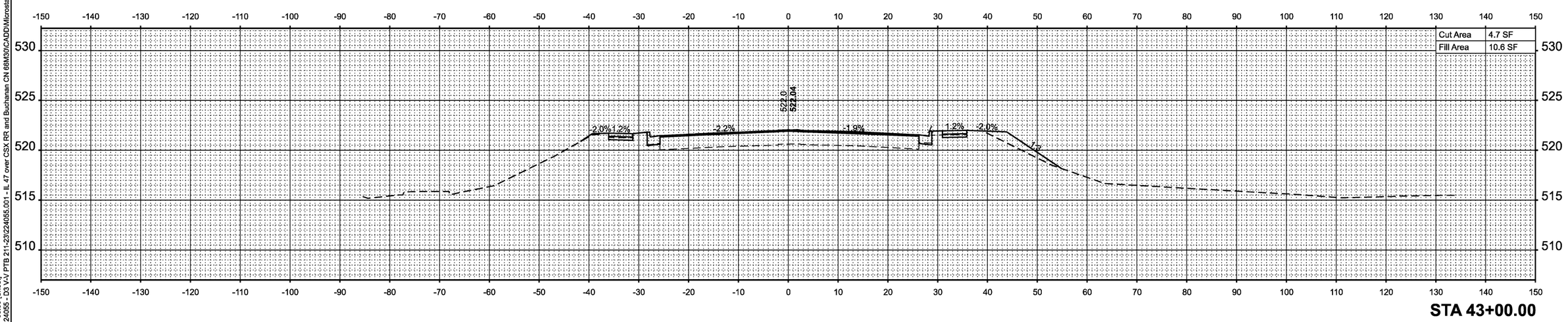

STA 43+00.00

MODEL: ExCL - 43+00.00 [Sheet]
FILE NAME: H:\P224055 - D3 V-V PTB 211-23\224055.001 - IL 47 over CSX RR and Buchanan CN 66M30\CADD\Microstation\CADD Drawings\D366M30-eht-xsec.dgn

OATES ASSOCIATES
www.oatesassociates.com
ILLINOIS DESIGN FIRM LICENSE NO.: 184.001115

USER NAME = kevin.botterbush	DESIGNED -	REVISED -
	DRAWN -	REVISED -
	CHECKED -	REVISED -
PLOT DATE = 5/19/2026	DATE -	REVISED -

STATE OF ILLINOIS
DEPARTMENT OF TRANSPORTATION

CROSS SECTIONS

SCALE: 1"=10' | SHEET 13 OF 13 SHEETS | STA. | TO STA.

F.A.P RTE.	SECTION	COUNTY	TOTAL SHEETS	SHEET NO.
326	((111)HB1,HVB1)ES	GRUNDY	137	137
		CONTRACT NO. 66M30		
		ILLINOIS	FED. AID PROJECT	