WA055

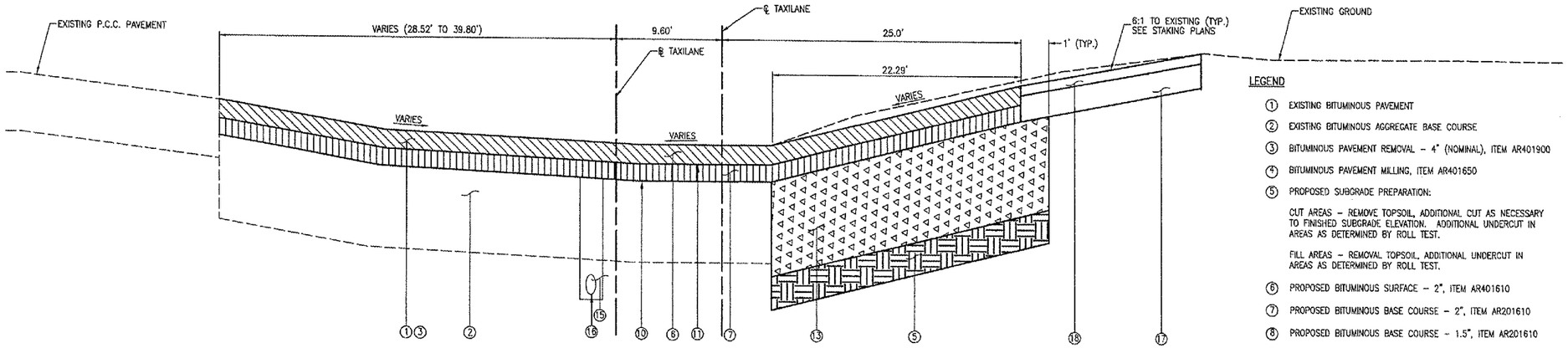

PROPOSED EAST TAXILANE NEW PAVEMENT CONSTRUCTION
(SECTION SHOWN LOOKING SOUTH)
STA 9+43.80 TO STA 10+40.77

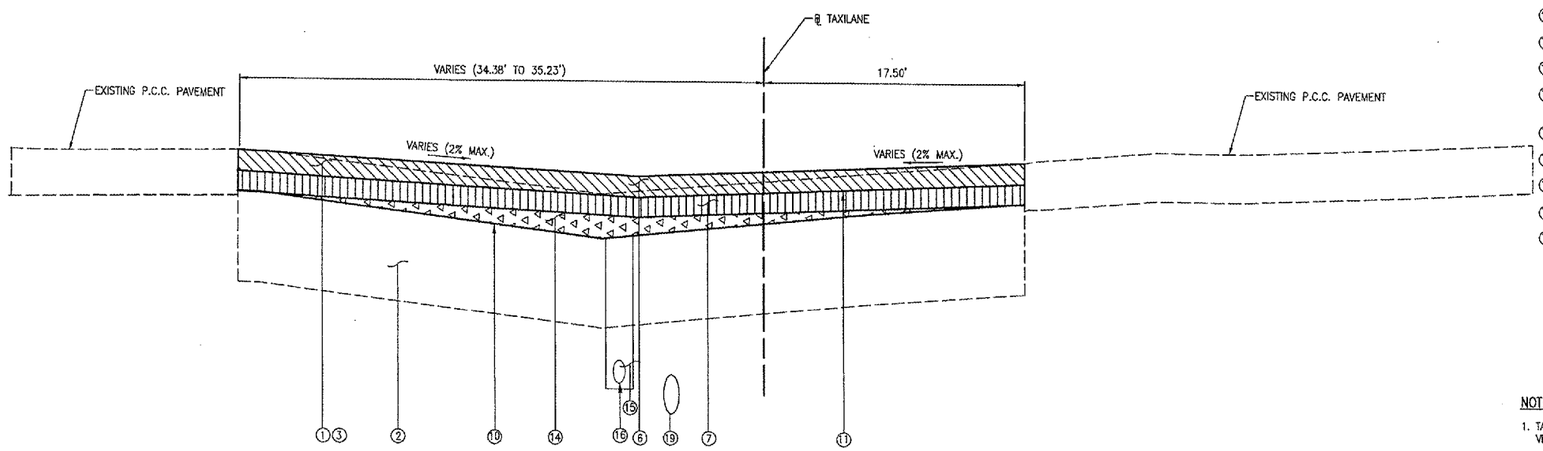

PROPOSED WEST TAXILANE GRADE ADJUSTMENT AND OVERLAY
(SECTION SHOWN LOOKING SOUTH)
STA 4+35.03 TO STA 6+76.54

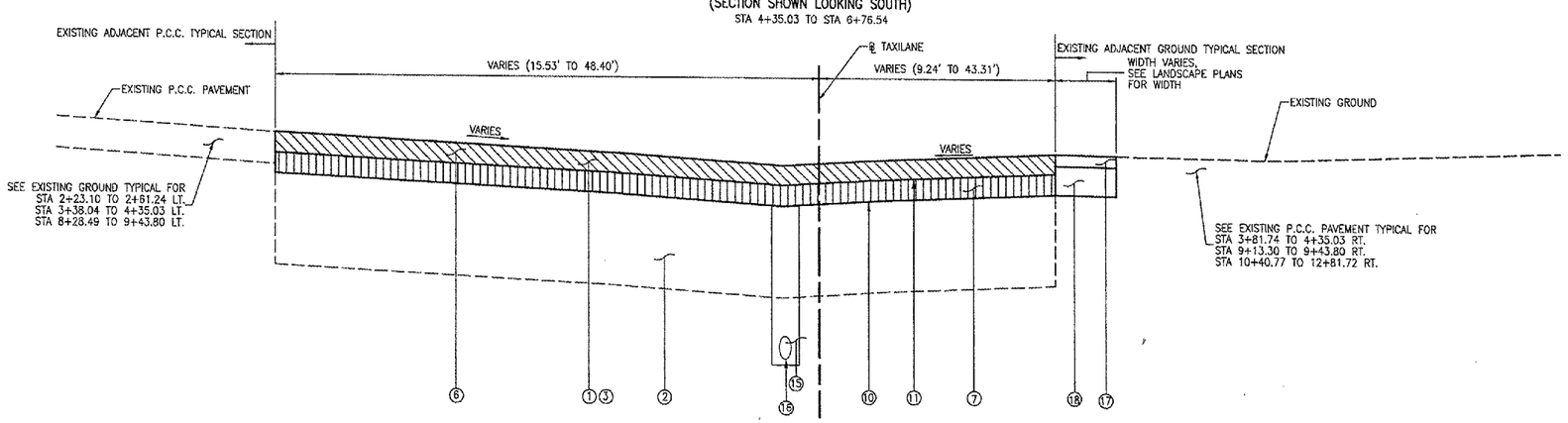

PROPOSED WEST AND EAST TAXILANE OVERLAY
(SECTION SHOWN LOOKING SOUTH)
STA 2+23.10 TO STA 4+35.03
STA 8+28.49 TO STA 9+43.80
STA 10+40.77 TO STA 12+81.72

LEGEND

1. EXISTING BITUMINOUS PAVEMENT
2. EXISTING BITUMINOUS AGGREGATE BASE COURSE
3. BITUMINOUS PAVEMENT REMOVAL – 4" (NOMINAL), ITEM AR401900
4. BITUMINOUS PAVEMENT MILLING, ITEM AR401650
5. PROPOSED SUBGRADE PREPARATION:

   CUT AREAS – REMOVE TOPSOIL, ADDITIONAL CUT AS NECESSARY TO FINISHED SUBGRADE ELEVATION. ADDITIONAL UNDERCUT IN AREAS AS DETERMINED BY ROLL TEST.

   FILL AREAS – REMOVAL TOPSOIL, ADDITIONAL UNDERCUT IN AREAS AS DETERMINED BY ROLL TEST.
6. PROPOSED BITUMINOUS SURFACE – 2", ITEM AR401610
7. PROPOSED BITUMINOUS BASE COURSE – 2", ITEM AR201610
8. PROPOSED BITUMINOUS BASE COURSE – 1.5", ITEM AR201610
9. PROPOSED BITUMINOUS BASE COURSE, LEVELING (DEPTH RANGE OF 1.9" TO 8.5"), ITEM AR201620
10. PROPOSED BITUMINOUS PRIME COAT, ITEM AR602510
11. PROPOSED BITUMINOUS TACK COAT, ITEM AR603510
12. PROPOSED CRACK CONTROL MATERIAL–TYPE 2, ITEM AR800996
13. PROPOSED CRUSHED AGGREGATE BASE COURSE – 10", ITEM AR209610
14. EXISTING AGGREGATE BASE TO BE REGRADED TO MEET PROPOSED GRADES, QUANTITY OF REGRADING REQUIRED INCLUDED IN ITEM AR152410.
15. POROUS BACKFILL NO. 2, ITEM AR705412
16. PROPOSED 4" PERFORATED UNDERDRAIN, ITEM AR705504
17. PROPOSED SEEDING AND MULCHING, ITEM AR9001510 AND AR908510
18. PROPOSED TOPSOIL – 4", ITEM AR905520
19. PROPOSED STORM SEWER, SEE PLAN AND SCHEDULE FOR LOCATION

NOTES

1. TACK COAT SHALL BE APPLIED BETWEEN EACH LIFT OF BITUMINOUS INCLUDING VERTICAL FACES.
2. BITUMINOUS PAVEMENT SAWING TO BE PAID AS ITEM AR401665. SEE DETAILS.
3. BITUMINOUS JOINT SEALING TO BE PAID FOR AS ITEM AR401660. SEE DETAILS.

HANSON

HANSON PROFESSIONAL SERVICES INC.

815 Commerce Drive, Suite 200
Oak Brook, Illinois 60523
Telephone: 630.990.3800
Fax: 630.990.3801

Waukegan Regional Airport
Waukegan Regional Port District

3580 North McAree Road
Waukegan, Illinois 60087
Phone: 847.244.0055
Fax: 847.244.3813

REPAIR SELECTED PAVEMENT AREAS, REHABILITATE HANGAR TAXILANES AND SERVICE ROAD, AND CONSTRUCT NEW HANGAR PAVEMENTS

A.I.P. PROJ.: 3-17-0105-B30
IL. PROJ.: UGN-3449

No.	Drawing Issue Description	Date	By

Date

MAY 08, 2005

Sheet Title

TAXILANES TYPICAL SECTIONS

831-04TXYD
Project Number

RPH 02-13-05
Layout By Date

RPH 02-14-05
Designed By Date

RMH/TMM 04-11-05
Reviewed By Date

RPH
Drawn By

52
Sheet No.

SJM
05/09/2005, 03:12 PM
I:\04Jobs\0831\83104TXYD\Civil\SHEET52 Typical Sections_01.dgn