WA055

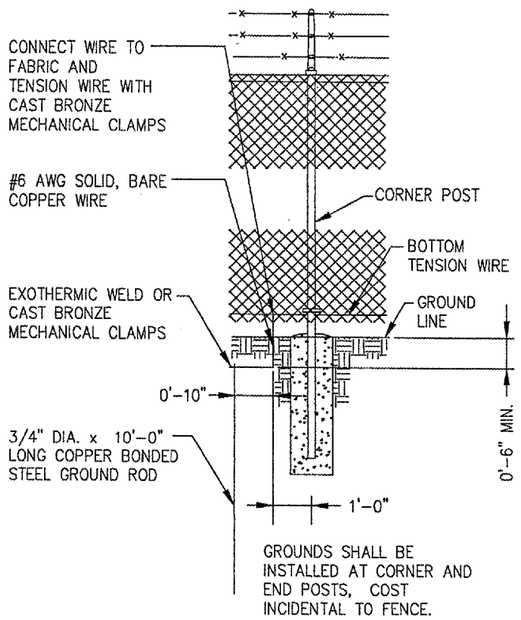

PROTECTIVE ELECTRICAL GROUND

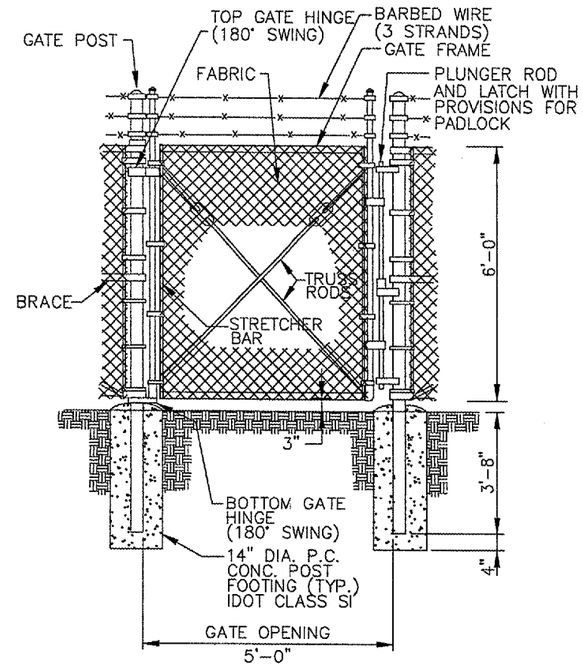

PEDESTRIAN GATE, 5 FOOT WIDE

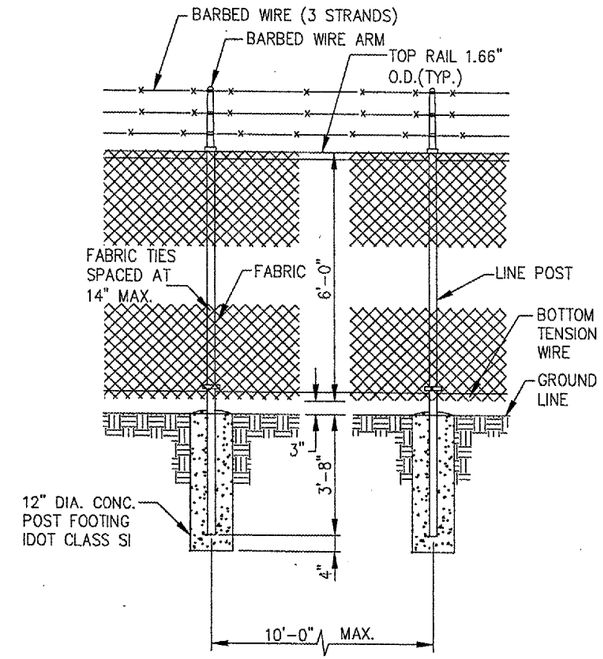

LINE POST

LINE POST	
SECTION (O.D.)	LBS/FT.
PIPE TYPE A 1.90"	2.72
PIPE TYPE B 1.90"	2.28
PIPE TYPE C 1.90"	2.26

TERMINAL POST	
SECTION (O.D.)	LBS/FT.
PIPE TYPE A 2.375"	3.65
PIPE TYPE B 2.375"	3.11
PIPE TYPE C 2.375"	3.09

HORIZONTAL BRACES	
SECTION (O.D.)	LBS/FT.
PIPE TYPE A 1.66"	2.27
PIPE TYPE B 1.66"	1.83
PIPE TYPE C 1.66"	1.82

GATE FRAMES	
SECTION (O.D.)	LBS/FT.
PIPE TYPE A 1.66"	2.27
PIPE TYPE B 1.66"	1.83
PIPE TYPE C 1.66"	1.82

GATE POSTS					
GATE OPENING (FT.)		PIPE TYPE A		PIPE TYPE B	
SINGLE	DOUBLE	SIZE (O.D.)	(LBS./FT.)	SIZE (O.D.)	(LBS./FT.)
UP TO 4	UP TO 8	2.375"	3.65	2.375"	3.11
OVER 4 TO 8	OVER 8 TO 16	2.875"	5.79	2.875"	4.64
OVER 8 TO 14	OVER 16 TO 28	3.5"	7.58	3.5"	5.707

DETAILS SHOWN ARE NOT TO SCALE

HANSON

HANSON PROFESSIONAL SERVICES INC.

815 Commerce Drive, Suite 200
Oak Brook, Illinois 60523
Telephone: 630.990.3800
Fax: 630.990.3801

Waukegan Regional Airport
Waukegan Regional Port District

3580 North McAree Road
Waukegan, Illinois 60087
Phone: 847.244.0055
Fax: 847.244.3813

REPAIR SELECTED PAVEMENT AREAS, REHABILITATE HANGAR TAXILANES AND SERVICE ROAD, AND CONSTRUCT NEW HANGAR PAVEMENTS

A.I.P. PROJ.: 3-17-0105-B30
IL. PROJ.: UGN-3449

No.	Drawing Issue Description	Date	By

Date
MAY 06, 2005

Sheet Title
FENCE DETAILS

831-04TXYD
Project Number

AAP	02/28/05
Layout By	Date
AAP	02/28/05
Designed By	Date
TMM	05/05/05
Reviewed By	Date
AAP	
Drawn By	

$USER$
$DATE$
$FILE$