CONTRACT NO. 97245

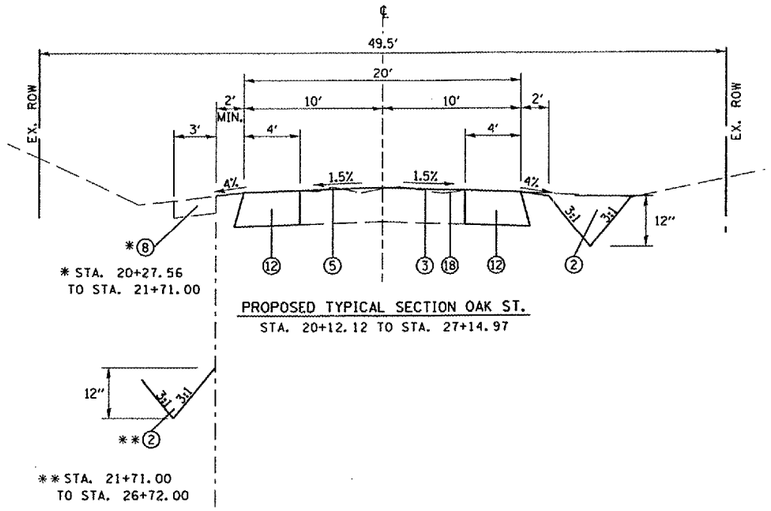

* STA. 20+27.56
TO STA. 21+71.00

PROPOSED TYPICAL SECTION OAK ST.

STA. 20+12.12 TO STA. 27+14.97

** STA. 21+71.00
TO STA. 26+72.00

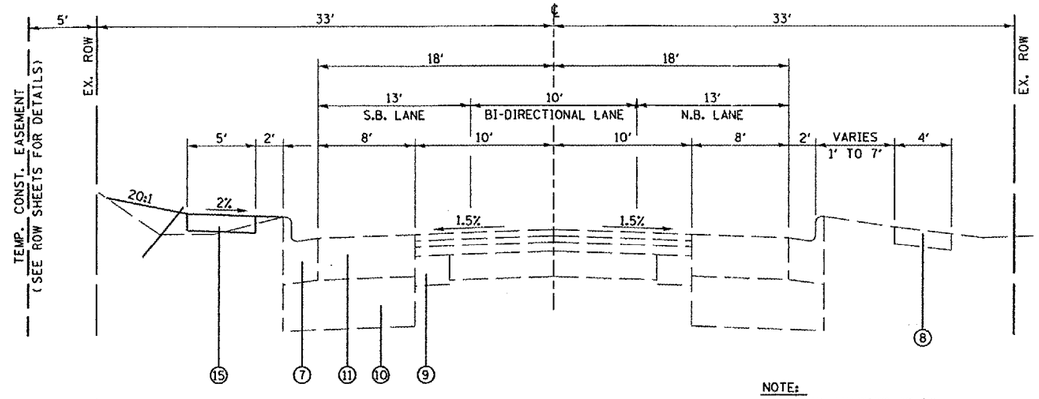

PROPOSED TYPICAL SECTION S. MAIN STREET

STA. 299+00 TO STA. 304+41.68

NOTE:
PAVEMENT MARKING TO BE COMPLETED WITH S. MAIN STREET CONTRACT SEC. 00-00006-00-PV

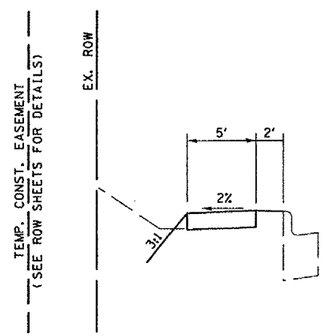

PROPOSED TYPICAL SECTION S. MAIN STREET

STA. 299+00 TO STA. 304+41.68

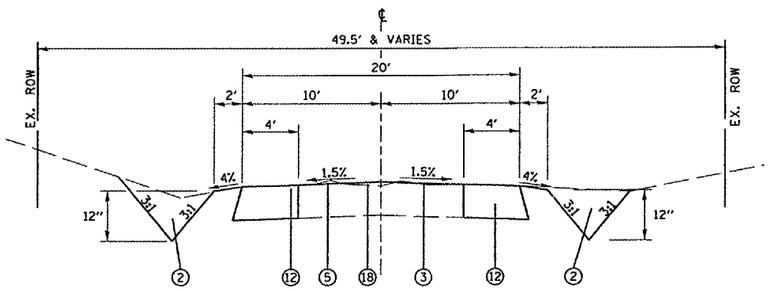

PROPOSED TYPICAL SECTION CHURCH ST.

STA. 27+14.97 TO STA. 33+06.61

LEGEND

1. EXISTING OIL & CHIP ROADWAY
2. EARTH EXCAVATION
3. PROPOSED BITUMINOUS SURFACE TREATMENT A-2
4. EXISTING BITUMINOUS BASE COURSE
5. PROPOSED SCARIFING AND REGRADING ASPHALT SURFACE
6. EXISTING BITUMINOUS OVERLAYED PAVEMENT, VARIES
7. EXISTING COMBINATION CURB & GUTTER, TYPE B-6.24
8. EXISTING CONCRETE SIDEWALK, 4"
9. EXISTING PCC BASE COURSE WIDENING, 7"
10. EXISTING LIME MODIFIED SOIL, 12"
11. EXISTING BITUMINOUS BASE COURSE WIDENING
12. PROPOSED BITUMINOUS BASE COURSE WIDENING, SUPERPAVE 10"
13. PROPOSED BITUMINOUS PAVEMENT (FUTURE CONSTRUCTION)
14. PROPOSED COMBINATION CURB & GUTTER, TYPE B-6.24 (FUTURE CONSTRUCTION)
15. PROPOSED PCC SIDEWALK, 4"
16. PROPOSED BITUMINOUS SHARED-USE TRAIL - AGGREGATE BASE COURSE T-A, 6"
17. PROPOSED BITUMINOUS TWO WAY BICYCLE TRAIL - BITUMINOUS CONCRETE SURFACE COURSE, SUPERPAVE, IL9.5L (LOW ESAL), 2"
18. PROPOSED AGGREGATE BASE COURSE, TYPE A (TON)

THOUVENOT, WADE & MOERCHEN, INC.
ENGINEERS ◆ SURVEYORS ◆ PLANNERS

☒ CORPORATE OFFICE
4940 OLD COLLINSVILLE RD.
SWANSEA, ILLINOIS 62226
TEL (618) 624-4488
FAX (618) 624-6688
corp@twm-inc.com

☐ WATERLOO OFFICE
118 EAST THIRD STREET
WATERLOO, ILLINOIS 62298
TEL (618) 939-5050
FAX (618) 939-3938
waterloo@twm-inc.com

☐ ST. LOUIS OFFICE
1001 CRAIG ROAD, SUITE 260
ST. LOUIS, MISSOURI 63146
TEL (314) 236-5052
FAX (314) 872-2194
stlouis@twm-inc.com

PROFESSIONAL REGISTRATIONS	LICENSE NO.
ILLINOIS PROFESSIONAL DESIGN FIRM	184-003220
PROFESSIONAL ENGINEERING CORP.	62-035370
PROFESSIONAL STRUCTURAL ENGR. CORP.	81-005202
ILLINOIS PROF. LAND SURVEYING CORP.	048-000029
MISSOURI PROFESSIONAL ENGR. CORP.	NC 001528
MISSOURI LAND SURVEYING CORP.	NC 000346

SEAL

Renewal Date:
Signature Date:

STATEMENT OF RESPONSIBILITY

I hereby confirm that the document herein to be authenticated by my seal is restricted to this sheet, and I hereby disclaim any responsibility for all other drawings, specifications, estimates, reports or other documents or instruments relating to or intended to be utilized for any other part of the architectural, engineering or survey project.

TITLE: PROPOSED TYPICAL SECTIONS

PROJECT: BIKE TRAIL
VILLAGE OF SHILOH
ST. CLAIR COUNTY, ILLINOIS

REV.	DATE	DESCRIPTION
△	/ /	
△	/ /	

DRAWN BY: SGK	SHEET 5 OF 37 SHEETS
DESIGNED BY:	
CHECKED BY:	
CONTRACT NUMBER	
PROJECT NUMBER 99751	

☒ ISSUED FOR REVIEW ☐ ISSUED FOR BIDDING
☐ ISSUED FOR CONSTR. ☐ RECORD DRAWING

PLAN — NOTE BOOK NO. — SURVEYED — PLOTTED — ALIGNMENT CHECKED — CADD FILE NAME — BY — DATE

PROFILE — NOTE BOOK NO. — SURVEYED — PLOTTED — GRADES CHECKED — B.M. POSTED — STRUCTURE NOTATIONS CHKD — BY — DATE

$TIME$
$FILE$
$DATE$