F.A.P. RTE.	SECTION	COUNTY	TOTAL SHEETS	SHEET NO.
750	(112,113) Y, WRS	FAYETTE	159	35
STA.		TO STA.		
FED. ROAD DIST. NO. 7	ILLINOIS	FED. AID PROJECT		

CONTRACT NO. 94927

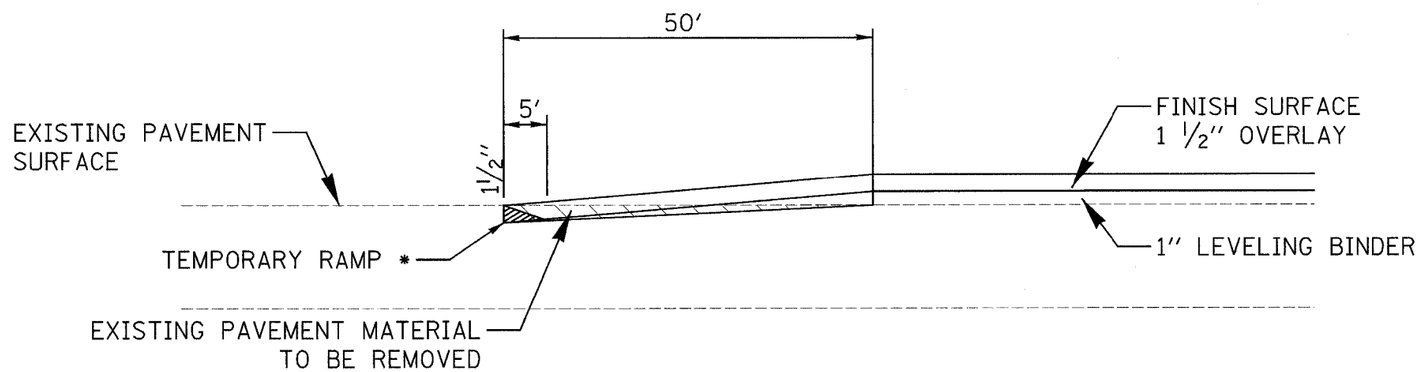

* TEMPORARY RAMP
COST OF TEMP. RAMP REMOVAL SHALL BE INCLUDED IN THE COST FOR PAY ITEM 'TEMPORARY RAMP'

BUTT JOINT DETAIL

STA. 204+00.00 TO STA. 204+50.00
STA. 280+32.6 TO STA. 280+82.6
STA. 283+53 TO STA. 284+03
STA. 411+57.5 TO STA. 412+07.5
STA. 413+63.7 TO STA. 414+13.7
STA. 435+50 TO STA. 436+00

REVISIONS NAME	DATE

ILLINOIS DEPARTMENT OF TRANSPORTATION

SPECIAL SHEET
BUTT JOINT DETAIL

F.A.P. 750 (IL. RTE. 185)
SECTION 112,113 - FAYETTE CO.

SCALE: DRAWN BY CRO
DATE JANAURY 19, 2005 CHECKED BY RCY

08:24:45 AM 01/14/2005 J:\2003\030045\0002\civil\phase 2 kdg\dgn\p2_750_joint_detail.dgn