| F.A.P. RTE. | SECTION | COUNTY | TOTAL SHEETS | SHEET NO. |
|---|---|---|---|---|
| 750 | (112,113) Y, WRS | FAYETTE | 159 | 32 |
| STA. | | TO STA. | | |
| FED. ROAD DIST. NO. 7 | ILLINOIS | FED. AID PROJECT | | |

**CONTRACT NO. 94927**

| | | DIMENSIONS | | | | | | REINFORCEMENT BARS | | | | |
|---|---|---|---|---|---|---|---|---|---|---|---|---|
| | | A | B | C | W | H | T | G | J | L | NUMBER BARS | POUND |
| SIDE | STATION | IN | IN | IN | IN | IN | IN | IN | IN | IN | EA | |
| RT. | •OMITTED• | 0 | 0 | 0 | 0 | 0 | 0 | 0 | 0 | 0 | 0 | •OMITTED• |
| LT. | •OMITTED• | 0 | 0 | 0 | 0 | 0 | 0 | 0 | 0 | 0 | 0 | •OMITTED• |
| RT. | 237+84.05 | 72 | 72 | 10 | 24 | 24 | 4 | 44 | 32 | 108 | 4 | 288.6 |
| LT. | 237+84.04 | 72 | 72 | 10 | 24 | 24 | 4 | 44 | 32 | 108 | 4 | 288.6 |
| RT. | 256+49.20 | 72 | 72 | 10 | 24 | 24 | 4 | 44 | 32 | 108 | 4 | 288.6 |
| LT. | 256+48.22 | 72 | 72 | 10 | 24 | 24 | 4 | 44 | 32 | 108 | 4 | 288.6 |
| RT. | 299+66.02 | 80 | 80 | 46.8 | 24 | 24 | 4 | 44 | 32 | 108 | 6 | 432.9 |
| LT. | 299+34.51 | 80 | 80 | 45.6 | 24 | 24 | 4 | 44 | 32 | 108 | 6 | 432.9 |
| RT. | 314+34.03 | 72 | 72 | 10 | 24 | 24 | 4 | 44 | 32 | 108 | 4 | 288.6 |
| LT. | 314+34.12 | 72 | 72 | 10 | 24 | 24 | 4 | 44 | 32 | 108 | 4 | 288.6 |
| RT. | 324+63.45 | 72 | 72 | 10 | 24 | 24 | 4 | 44 | 32 | 108 | 4 | 288.6 |
| LT. | 324+64.20 | 72 | 72 | 10 | 24 | 24 | 4 | 44 | 32 | 108 | 4 | 288.6 |
| RT. | 327+29.39 | 80 | 80 | 73.2 | 24 | 24 | 4 | 44 | 32 | 108 | 6 | 432.9 |
| LT. | 326+61.91 | 80 | 80 | 75.6 | 24 | 24 | 4 | 44 | 32 | 108 | 6 | 432.9 |
| RT. | 356+53.24 | 72 | 72 | 10 | 24 | 24 | 4 | 44 | 32 | 108 | 4 | 288.6 |
| LT. | 356+53.08 | 72 | 72 | 10 | 24 | 24 | 4 | 44 | 32 | 108 | 4 | 288.6 |
| RT. | 369+63.35 | 72 | 72 | 10 | 24 | 24 | 4 | 44 | 32 | 108 | 4 | 288.6 |
| LT. | 369+63.13 | 72 | 72 | 10 | 24 | 24 | 4 | 44 | 32 | 108 | 4 | 288.6 |
| RT. | 388+30.57 | 182 | 182 | 10 | 72 | 72 | 7 | 98 | 59 | 216 | 4 | 577.2 |
| LT. | 388+31.75 | 182 | 182 | 10 | 72 | 72 | 7 | 98 | 59 | 216 | 4 | 577.2 |
| RT. | 401+09.22 | 122 | 170 | 10 | 48 | 48 | 5 | 94 | 45 | 184 | 4 | 491.6 |
| LT. | 401+09.48 | 122 | 170 | 11 | 48 | 48 | 5 | 94 | 45 | 184 | 6 | 737.5 |
| RT. | •OMITTED• | 0 | 0 | 0 | 0 | 0 | 0 | 0 | 0 | 0 | 0 | •OMITTED• |
| LT. | •OMITTED• | 0 | 0 | 0 | 0 | 0 | 0 | 0 | 0 | 0 | 0 | •OMITTED• |
| RT. | 419+52.00 | 80 | 80 | 72 | 24 | 24 | 4 | 44 | 32 | 108 | 6 | 432.9 |
| LT. | 418+85.29 | 80 | 80 | 72 | 24 | 24 | 4 | 44 | 32 | 108 | 6 | 432.9 |
| RT. | 424+10.56 | 72 | 72 | 10 | 24 | 24 | 4 | 44 | 32 | 108 | 4 | 288.6 |
| LT. | 424+10.44 | 72 | 72 | 10 | 24 | 24 | 4 | 44 | 32 | 108 | 4 | 288.6 |
| RT. | 427+27.98 | 80 | 80 | 46.8 | 24 | 24 | 4 | 44 | 32 | 108 | 6 | 432.9 |
| LT. | 427+70.79 | 80 | 80 | 42 | 24 | 24 | 4 | 44 | 32 | 108 | 6 | 432.9 |
| RT. | 428+34.65 | 80 | 80 | 22.8 | 24 | 24 | 4 | 44 | 32 | 108 | 6 | 432.9 |
| LT. | 428+26.36 | 80 | 80 | 13.2 | 24 | 24 | 4 | 44 | 32 | 108 | 6 | 432.9 |
| RT. | 430+92.27 | 80 | 80 | 55.2 | 24 | 24 | 4 | 44 | 32 | 108 | 6 | 432.9 |
| LT. | 430+22.76 | 80 | 80 | 56.4 | 24 | 24 | 4 | 44 | 32 | 108 | 6 | 432.9 |
| | TOTAL | | | | | | | | | | | 11618 |

## DETAIL OF CONCRETE COLLAR FOR BOX CULVERT EXTENSIONS

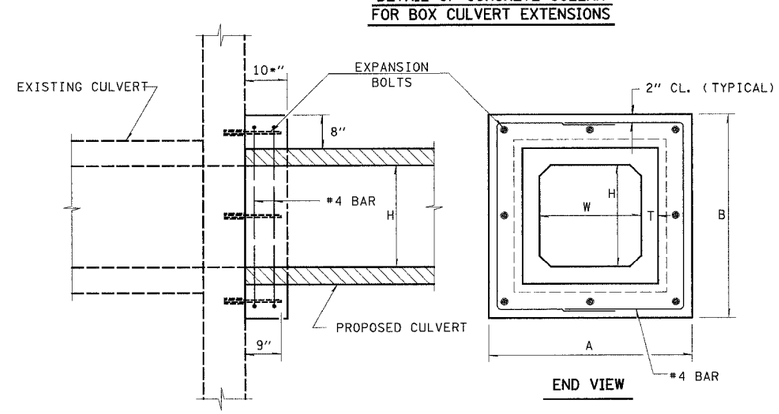


SECTION A-A

END VIEW

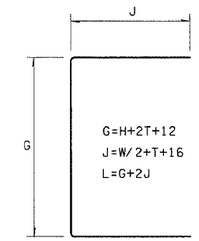


BAR DETAIL

NOTE: EXPANSION BOLTS SHALL CONSIST OF SELF-DRILLING EXPANSION SHIELDS AND HOOKED BOLTS. HOOKED BOLTS SHALL EXTEND A MINIMUM OF 9" INTO THE NEW CONCRETE.

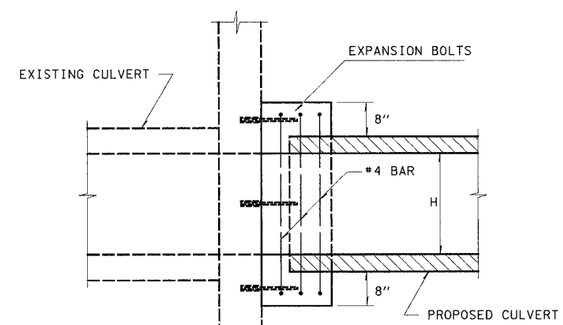


SECTION B-B

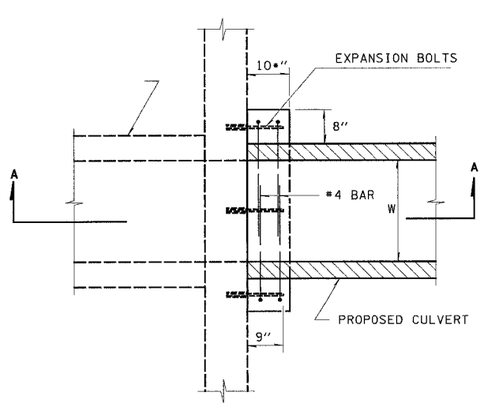


PLAN VIEW

(RIGHT ANGLE CULVERT)

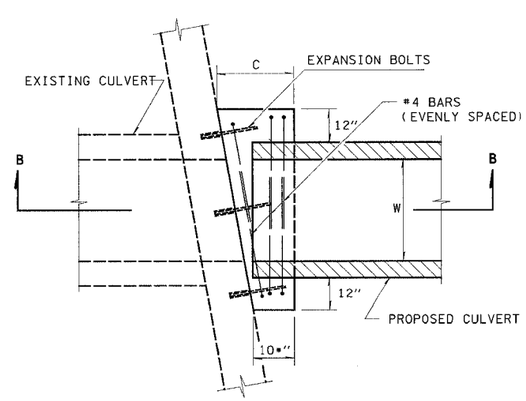


PLAN VIEW

(SKEWED CULVERT)

| REVISIONS | |
|---|---|
| NAME | DATE |
| KdG | 3/02/05 |

ILLINOIS DEPARTMENT OF TRANSPORTATION

# CONCRETE COLLAR DETAIL FOR BOX CULVERT EXTENSIONS

F.A.P. 750 (IL. RTE. 185)

SECTION 112,113 - FAYETTE CO.

SCALE: DRAWN BY CRO

DATE JANAURY 19, 2005 CHECKED BY RCY

PLAN | SURVEYED | PLOTTED | NOTE BOOK | ALIGNMENT CHECKED | BY | CADD FILE NAME | NO. | BY | DATE

PLAN | SURVEYED | PLOTTED | NOTE BOOK | ALIGNMENT CHECKED | BY | CADD FILE NAME | NO. | BY | DATE

02:34:09 PM 3/2/2005 j:\2003\030045\0002\civil\phase 2 kdg\dgn\p2_750_detail_sheets.dgn