ROUTE NO.	SECTION	COUNTY	TOTAL SHEETS	SHEET NO.
F.A.P. RTE. 774	107BY	EFFINGHAM	273	229
FED. ROAD DIST. NO. 7	ILLINOIS	FED. AID PROJECT-		

SHEET NO. 3
29 SHEETS

CONTRACT NO. 94827

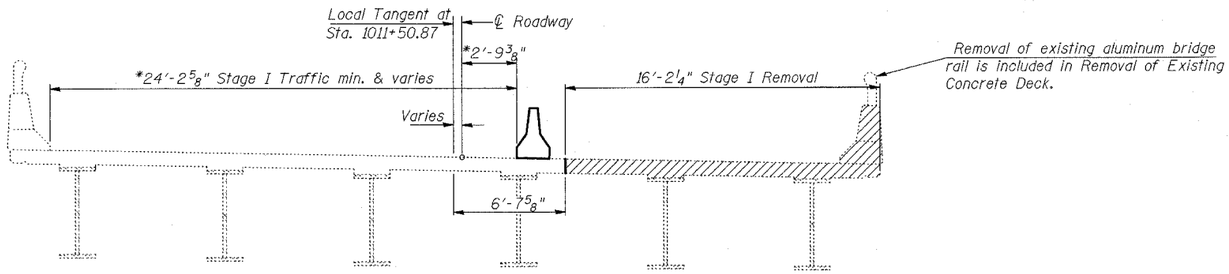

STAGE I REMOVAL

(Looking East) (Dim. at right angles except as noted)

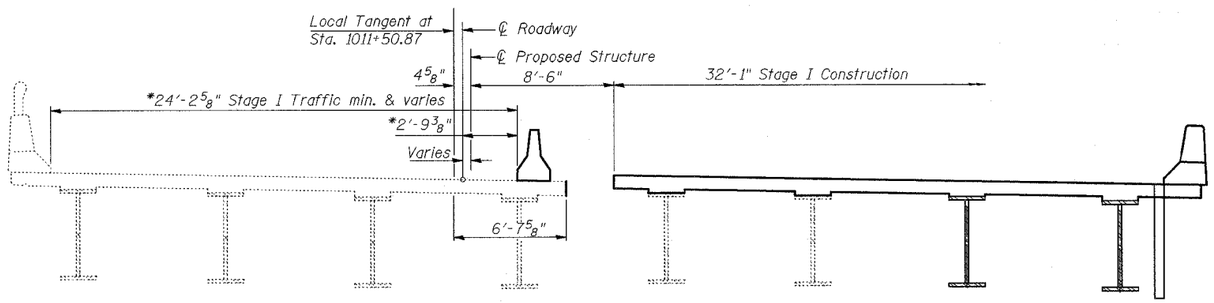

STAGE I CONSTRUCTION

(Looking East) (Dim. at right angles except as noted)

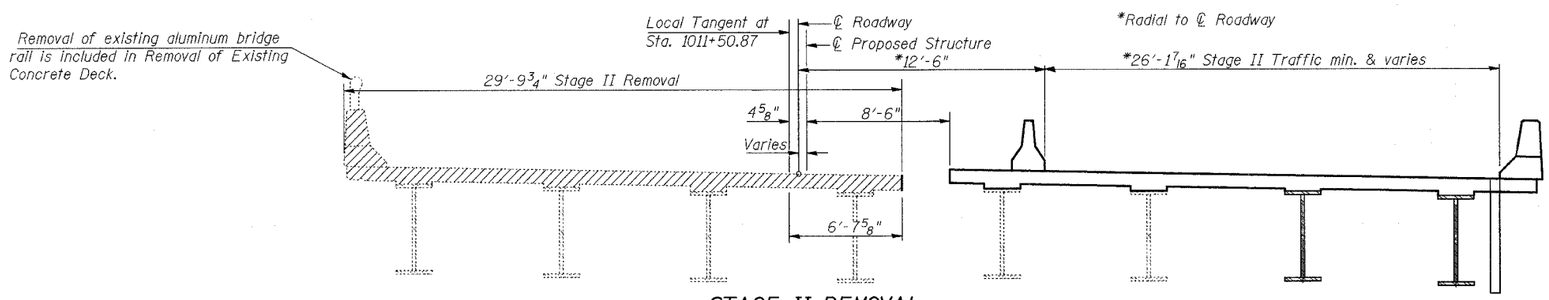

STAGE II REMOVAL

(Looking East) (Dim. at right angles except as noted)

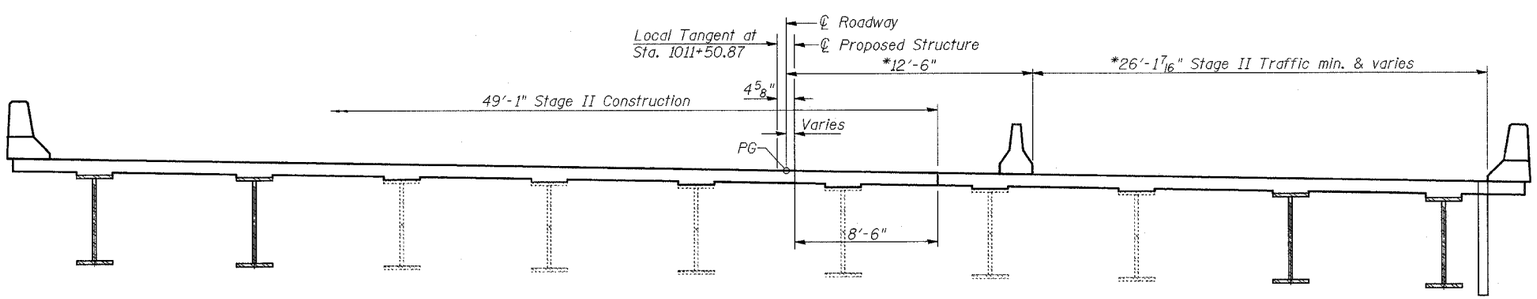

STAGE II CONSTRUCTION

(Looking East) (Dim. at right angles except as noted)

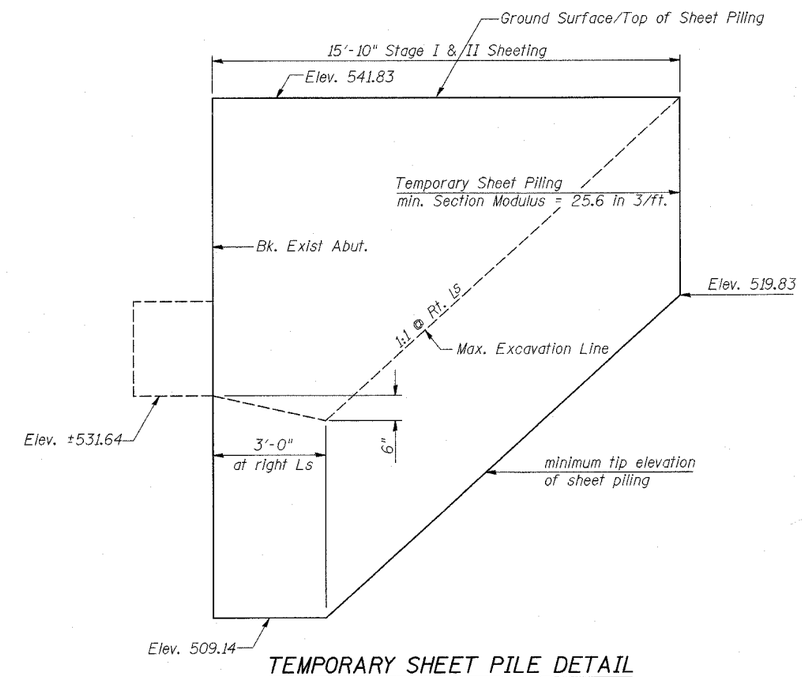

TEMPORARY SHEET PILE DETAIL

If the Contractor chooses to alter the temporary cantilevered sheet piling design requirements shown on the plans, a design submittal including plan details and calculations will be required for review and acceptance by the Engineer.

STAGE CONSTRUCTION SEQUENCE

1. Direct Stage I Traffic as shown.
2. Drive Temporary Sheet Piling located behind each abutment and proceed with Stage I Removal.
3. Proceed with Stage I Construction.
4. Direct Stage II Traffic as shown.
5. Relocate Stage I Sheet Piling as necessary for Stage II Sheet Piling.
6. Proceed with Stage II Removal and Construction.

NOTES

Hatched areas indicate "Removal of Existing Concrete Deck". See Roadway Plans for quantity of Temporary Concrete Barrier.

The Shear Studs on existing girders will remain. It is the Contractor's responsibility to replace existing shear studs damaged during the removal of the existing Concrete deck. Cost included with Removal of Existing Concrete Deck.

SHEET TITLE
STAGED CONSTRUCTION DETAILS

PROJECT
IL RTE. 32/33 OVER LITTLE WABASH RIVER
F.A.P. RTE. 774 SECTION 107BY
EFFINGHAM COUNTY
STATION 1011+50.17
STRUCTURE NO. 025-0078

PROJECT NO. 02017
SCALE
DATE
DRAWN BY TFG
CHECKED BY GJB/MCB

COOMBE-BLOXDORF P.C.
Engineers / Land Surveyors
Springfield, Illinois
Design Firm License No. 184-002703

DRAWING NO. 3
OF 29 SHTS

$FILENAME$REV$