ROUTE NO.	SECTION	COUNTY	TOTAL SHEETS	SHEET NO.
F.A.P. RTE. 774	107BY-1	EFFINGHAM	273	218
FED. ROAD DIST. NO. 7	ILLINOIS	FED. AID PROJECT-		

SHEET NO. 18

26 SHEETS

CONTRACT NO. 94827

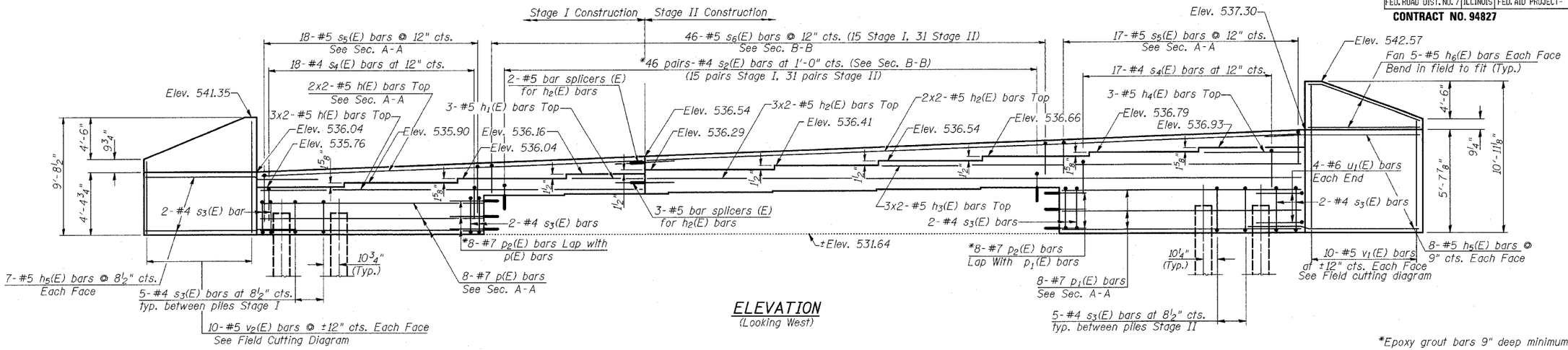

ELEVATION
(Looking West)

*Epoxy grout bars 9" deep minimum drilled holes according to Section 584 of the Standard Specifications. The grout and method of application shall be approved by the Engineer. Space p_2(E) bars to miss existing reinforcement.

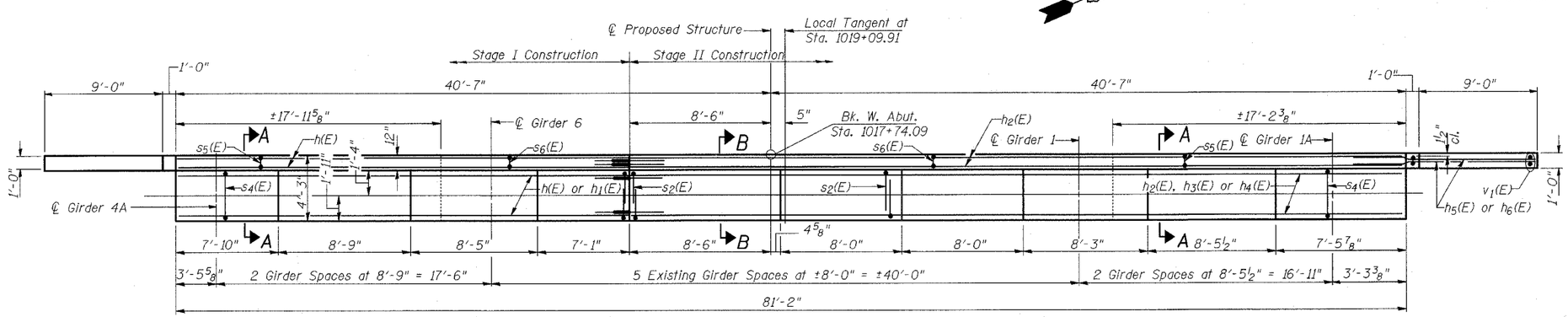

PLAN

PILE DATA

Type : HP10 x 57
Capacity : Driven to Refusal
Length : 24'
No Req'd. : 7 + 1 test pile

Min. Bar Lap

#5 bars = 1'-8"

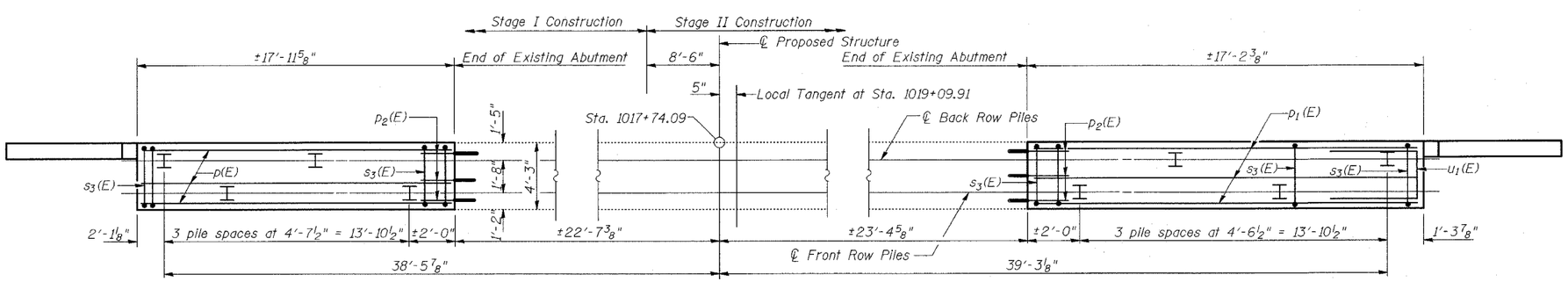

PLAN PILE CAP
Existing piles not shown

Work this sheet with sheet 20 of 26.

SHEET TITLE: WEST ABUTMENT

PROJECT: IL RTE. 32/33 OVER LITTLE WABASH RIVER OVERFLOW F.A.P. RTE. 774 SECTION 107BY-1 EFFINGHAM COUNTY STATION 1018+86.92 STRUCTURE NO. 025-0077

PROJECT NO. 02017
SCALE
DATE
DRAWN BY TFG
CHECKED BY KPS/CME/MCB
DRAWING NO. 18 OF 26 SHTS

COOMBE-BLOXDORF P.C.
Engineers / Land Surveyors
Springfield, Illinois
Design Firm License No. 184-002703

west-abut-proposed