ROUTE NO.	SECTION	COUNTY	TOTAL SHEETS	SHEET NO.
F.A.P. RTE. 774	107BY-1	EFFINGHAM	273	213
FED. ROAD DIST. NO. 7	ILLINOIS	FED. AID PROJECT-		

SHEET NO. 13
26 SHEETS

CONTRACT NO. 94827

TOP OF WEB ELEVATIONS

	Girder 1A	Girder 2A	Girder 3A	Girder 4A
℄ Brg. W. Abut.	541.646	541.515	540.622	540.486
℄ Splice 1	541.488	541.356	540.464	540.328
℄ Pier	541.488	541.356	540.464	540.328
℄ Splice 2	541.488	541.356	540.464	540.328
℄ Brg. E. Abut.	541.640	541.508	540.615	540.479

For Fabrication Only

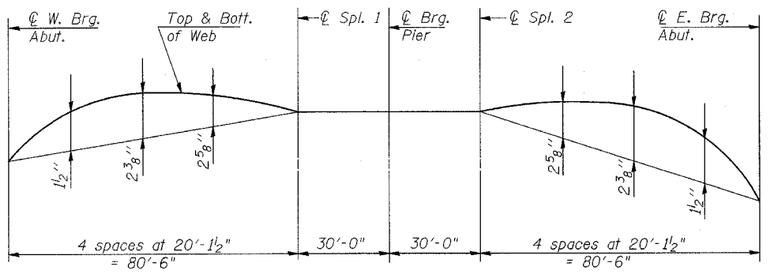

CAMBER DIAGRAM

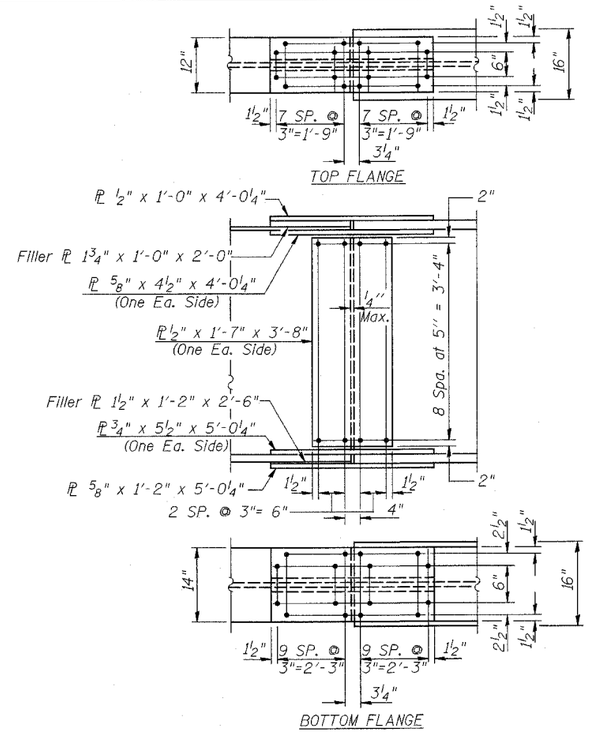

FIELD SPLICE DETAIL

All splice plates excluding filler PL's shall be subject to Notch Toughness Requirements

PROP. INTERIOR GIRDER MOMENT TABLE		0.4 Sp. 1 or 0.6 Sp. 2	Pier
Is	(in⁴)	22670	61900
Ic (n)	(in⁴)	54340	——
Ic (3n)	(in⁴)	39630	——
Ss	(in³)	993	2314
Sc (n)	(in³)	1338	——
Sc (3n)	(in³)	1224	——
Z	(in³)	——	2557
DL	(k/ft.)	1.12	1.73
MDL	('k)	741	3107
sDL	(k/ft.)	0.53	——
MsDL	('k)	433	——
ML	('k)	1090	1158
M (Imp)	('k)	229	243
5/3[ML+M(Imp)]	('k)	2198	2335
Ma	('k)	4384	7075
Mu	('k)	6285	7671
fsDL(non-comp)	(k.s.i.)	8.9	16.1
fsDL(comp)	(k.s.i.)	4.2	——
fs 5/3(L+Imp)	(k.s.i.)	19.7	12.1
fs (Overload)	(k.s.i.)	32.8	28.2
VR	(k)	68.8	

INTERIOR GIRDER REACTION TABLE		Abuts.	Pier
RDL	(k)	107	238.6
RL	(k)	51.2	91.8
Imp.	(k)	10.8	19.3
R (Total)	(k)	169	349.7

Is and Ss are the moment of inertia and section modulus of the steel section used in computing fs DL (non-comp.) and live load stresses at pier.

Ic(n) and Sc(n) are the moment of inertia and section modulus of the composite section used in computing stresses due to Live Load.

Ic(3n) and Sc(3n) are the moment of inertia and section modulus of the composite section used in computing stresses due to superimposed dead loads. (see AASHTO 10.38)

VR is the maximum Live Load + Impact shear range in span.

Z is the plastic section modulus used to determine the fully plastic moments in the non-composite areas.

Ma (Applied Moment)=1.3[MDL + MsDL + 5/3(ML + M(Imp))].

The Plastic Moment capacity (Mu) is computed according to AASHTO 10.48.1 and 10.50.1.1.

fs (Overload) is the sum of the stresses due to MDL + MsDL + 5/3(ML + M(Imp)).

RDL includes the weight of the concrete diaphragm and the dead load reaction from the approach pavement.

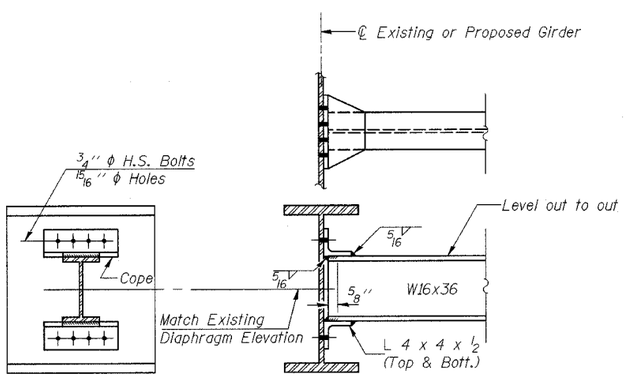

DIAPHRAGM D & D3

32 Required

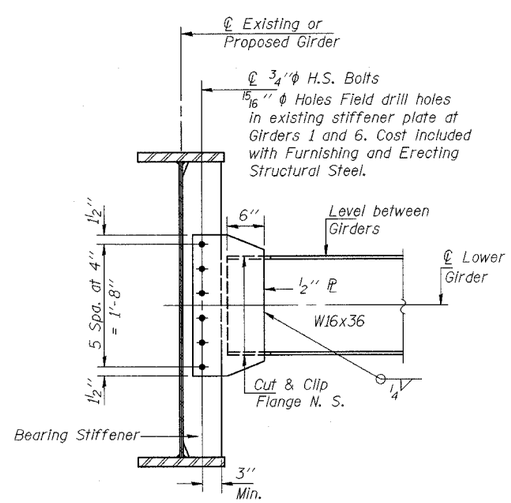

DIAPHRAGM D1 & D4

4 Required

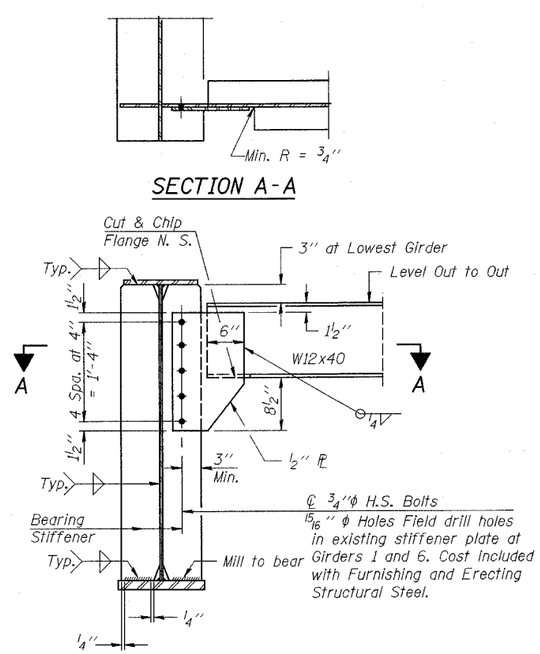

DIAPHRAGM D2 & D5

8 Required

Note: Two hardened washers shall be required over all oversized holes.

NOTES

Two hardened washers shall be required over all oversized holes for diaphragms.

Remove and replace existing bolts at diaphragms connected to existing Girders 1 and 6. Cost included with Furnishing and Erecting Structural Steel.

Work this Sheet with Sheet 12 of 26.

SHEET TITLE: STRUCTURAL STEEL	
PROJECT: IL RTE. 32/33 OVER LITTLE WABASH RIVER OVERFLOW F.A.P. RTE. 774 SECTION 107BY-1 EFFINGHAM COUNTY STATION 1018+86.92 STRUCTURE NO. 025-0077	PROJECT NO. 02017
	SCALE
	DATE
	DRAWN BY TFG
	CHECKED BY KPS/CME/MCB
COOMBE-BLOXDORF P.C. Engineers/Land Surveyors Springfield, Illinois Design Firm License No. 184-002703	DRAWING NO. 13 OF 26 SHTS