ROUTE NO.	SECTION	COUNTY	TOTAL SHEETS	SHEET NO.
F.A.P. RTE. 774	107BY-1	EFFINGHAM	273	209
FED. ROAD DIST. NO. 7	ILLINOIS	FED. AID PROJECT-		

SHEET NO. 9
26 SHEETS

CONTRACT NO. 94827

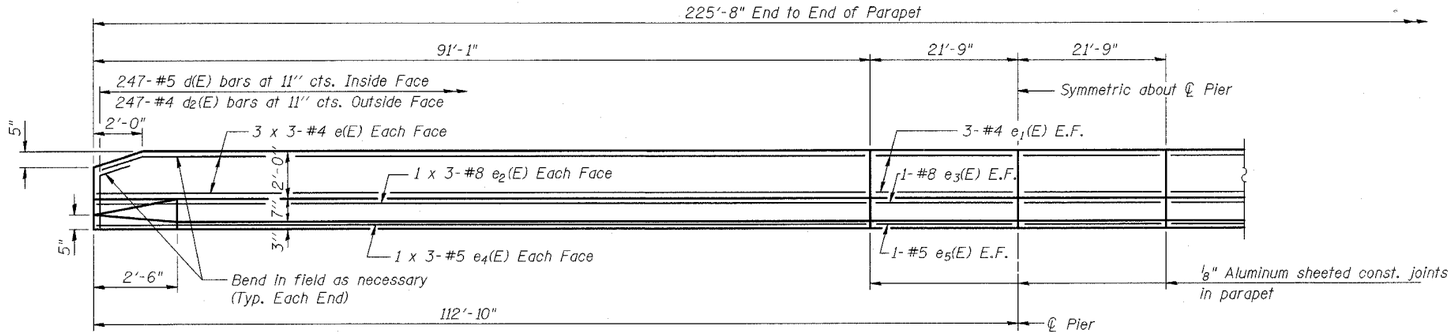

INSIDE ELEVATION OF PARAPET

MIN. BAR LAPS IN PARAPET

#4 = 1'-8"
#5 = 2'-2"
#8 = 4'-6"

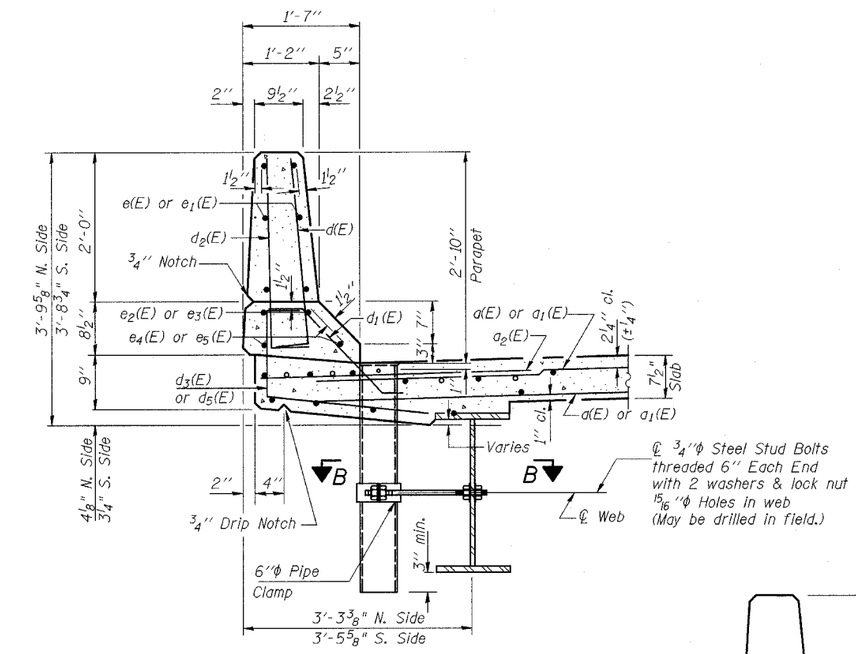

SECTION THRU PARAPET

(Showing 6" ϕ drain S. Side only)

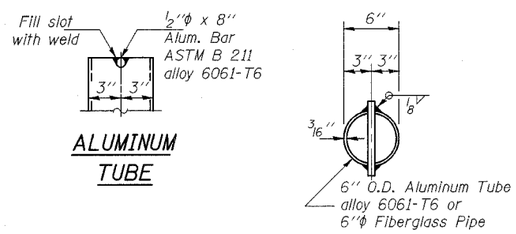

ALUMINUM TUBE

TOP PLAN

(Showing Aluminum Tube)

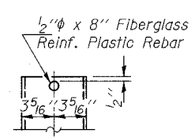

FIBERGLASS PIPE

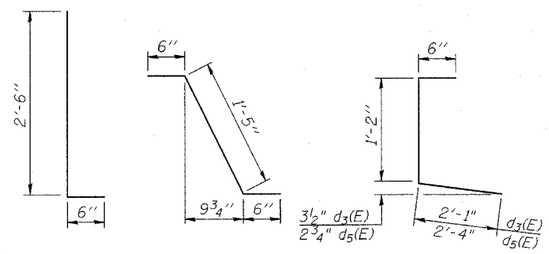

BARS d(E) & d2(E) BAR d1(E) BAR d3(E) & d5(E)

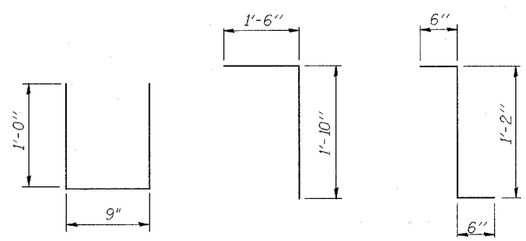

BAR u(E) BAR v(E) BAR d4(E)

SUPERSTRUCTURE BILL OF MATERIAL

Bar	No.	Size	Length	Shape
d(E)	923	#5	30'-11"	
d1(E)	923	#5	47'-11"	
d2(E)	538	#6	4'-6"	
d3(E)	16	#5	2'-0"	
b(E)	672	#5	29'-6"	
b1(E)	243	#6	30'-0"	
b2(E)	864	#5	26'-5"	
d(E)	494	#5	3'-0"	
d1(E)	482	#5	2'-5"	
d2(E)	494	#4	3'-0"	
d3(E)	247	#4	3'-9"	
d4(E)	12	#5	2'-2"	
d5(E)	247	#4	4'-0"	
e(E)	72	#4	31'-5"	
e1(E)	24	#4	21'-6"	
e2(E)	24	#8	33'-3"	
e3(E)	8	#8	21'-6"	
e4(E)	24	#5	31'-7"	
e5(E)	8	#5	21'-6"	
m(E)	20	#6	31'-8"	
m1(E)	20	#6	7'-8"	
m2(E)	8	#6	8'-5"	
m3(E)	8	#6	2'-7"	
m4(E)	8	#6	8'-1"	
m5(E)	16	#6	10'-0"	
m6(E)	40	#6	25'-10"	
m7(E)	24	#6	10'-5"	
s(E)	174	#5	7'-11"	
s1(E)	156	#4	12'-2"	
u(E)	164	#5	2'-9"	
v(E)	162	#5	3'-4"	
Reinforcement Bars, Epoxy Coated			Pound	152,780
Concrete Superstructure			Cu. Yds.	573.6
Bar Splicers			Each	1103

* Dimension as required by Pipe Clamp

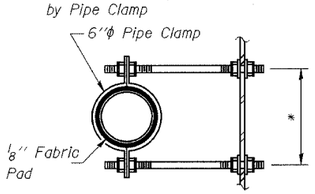

SECTION B-B

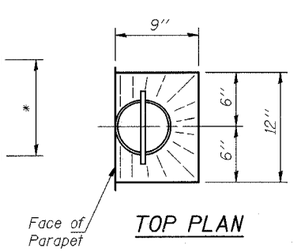

TOP PLAN

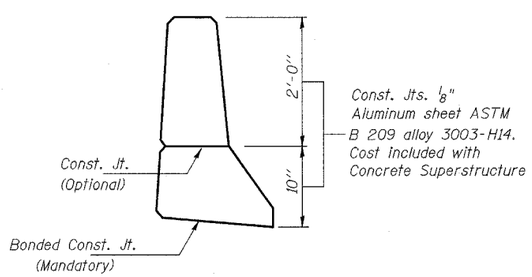

PARAPET JOINT DETAILS

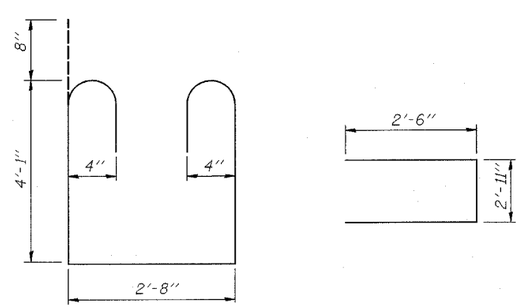

BAR s1(E) BAR s(E)

NOTES

Reinforcement bars designated (E) shall be epoxy coated. Bars indicated thus 1 x 2-#5 etc. indicates 1 line of bars with 2 lengths per line.

NOTES

The exterior surfaces of the floor drains shall be painted with the finish coat as specified in the special provisions for Cleaning and Painting New Metal Structures. The exterior surfaces of the drains shall be cleaned according to Steel Structures Painting Council's Spec. SSPC-SP1 prior to painting.

Fiberglass pipe shall conform to ASTM D 2996, with short-time rupture strength hoop tensile stress of 30,000 p.s.i. minimum.

SHEET TITLE: SUPERSTRUCTURE DETAILS

PROJECT: IL RTE. 32/33 OVER LITTLE WABASH RIVER OVERFLOW F.A.P. RTE. 774 SECTION 107BY-1 EFFINGHAM COUNTY STATION 1018+86.92 STRUCTURE NO. 025-0077

PROJECT NO. 02017
SCALE
DATE
DRAWN BY TFG
CHECKED BY KPS/CME/MCB
DRAWING NO. 9 OF 26 SHTS

COOMBE-BLOXDORF P.C.
Engineers / Land Surveyors
Springfield, Illinois
Design Firm License No. 184-002703

super-details