F.A.P. ROUTE	COUNTY SECTION 99-00243-00-PV	COUNTY	TOTAL SHTS.	SH
336	CONTRACT NO. 83782	KANE	268	1
SPECIAL DETAILS				
F.H.W.A. REG.5	ILLINOIS	PROJECT F-0336(0		

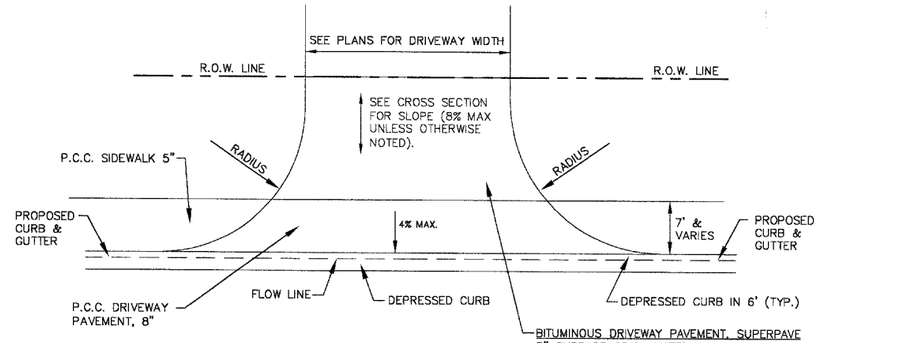

BITUMINOUS DRIVEWAY PAVEMENT, SUPERPAVE
3" SUBBASE GRAN. MATERIAL, TYPE C, GRAD. CA-6
6" BIT. BASE COURSE, SUPERPAVE
2 1/4" BIT. CONC. BINDER COURSE, SUPERPAVE, IL-19, N50
1 3/4" BIT CONC. SURFACE COURSE, SUPERPAVE, MIX "C", N50

OR

PCC DRIVEWAY PAVEMENT
3" SUBBASE GRAN. MATERIAL, TYPE C, GRAD. CA-6
8" PCC DRIVEWAY PAVEMENT

COMMERCIAL DRIVEWAY

SIDEWALK AT BACK OF CURB
(N.T.S.)

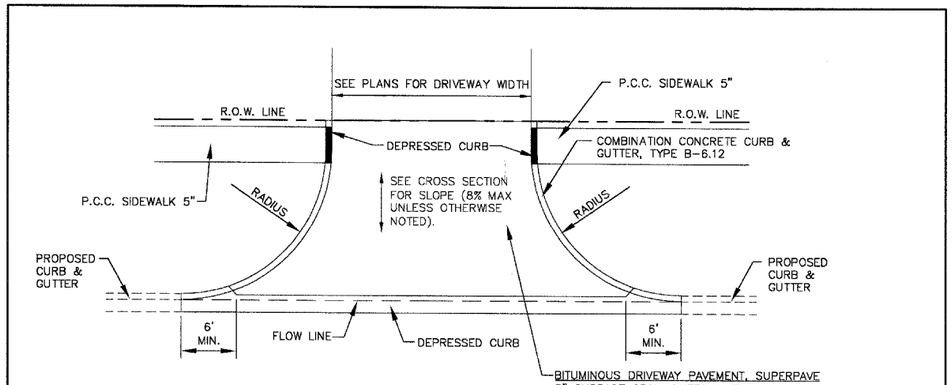

BITUMINOUS DRIVEWAY PAVEMENT, SUPERPAVE
3" SUBBASE GRAN. MATERIAL, TYPE C, GRAD. CA-6
6" BIT. BASE COURSE, SUPERPAVE
2 1/4" BIT. CONC. BINDER COURSE, SUPERPAVE, IL-19, N50
1 3/4" BIT CONC. SURFACE COURSE, SUPERPAVE, MIX "C", N50

OR

PCC DRIVEWAY PAVEMENT
3" SUBBASE GRAN. MATERIAL, TYPE C, GRAD. CA-6
8" PCC DRIVEWAY PAVEMENT

COMMERCIAL DRIVEWAY

(N.T.S.)

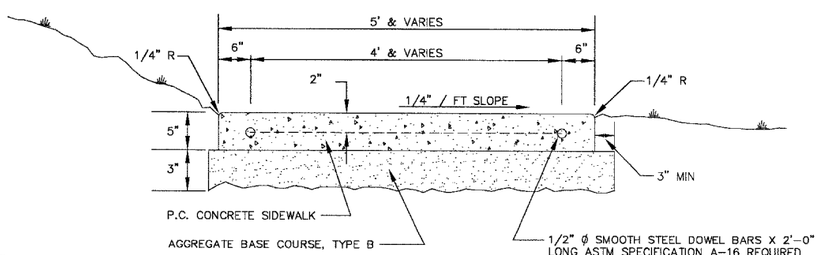

NOTE:
AT ALL LOCATIONS WHERE THE SIDEWALK ABUTTS CURB & GUTTER SECTIONS, THE SIDEWALK SHALL BE POURED FULL CURB & GUTTER DEPTH FOR A MINIMUM 12" WIDTH.

THE CONTRACT UNIT PRICE FOR P.C. CONC. SIDEWALK, 5" SHALL INCLUDE THE DOWEL BARS, EXPANSION AND CONTRACTION JOINTS, DUMMY JOINTS ANC BASE MATERIAL AS SPECIFIED.

TYPICAL SECTION SIDEWALK DETAIL

P.C. CONCRETE SIDEWALKS

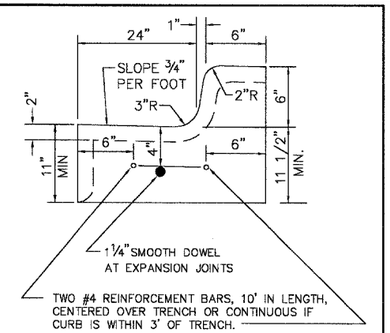

TWO #4 REINFORCEMENT BARS, 10' IN LENGTH, CENTERED OVER TRENCH OR CONTINUOUS IF CURB IS WITHIN 3' OF TRENCH.

DEPTH OF SAWED CONTRACTION JOINT = 2"

CONTRACTION JOINTS SHALL BE 10' C/C

SAWED CONTRACTION JOINT DETAIL

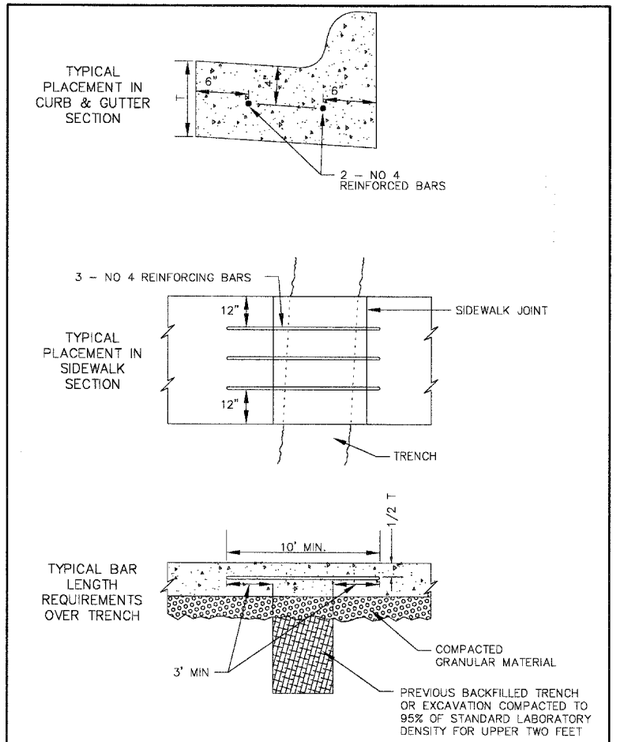

REINFORCING CURB & GUTTER OR SIDEWALK INSTALLED OVER TRENCH

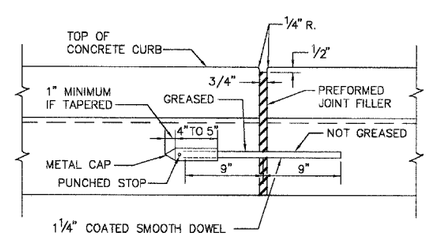

CURB EXPANSION JOINT DETAIL

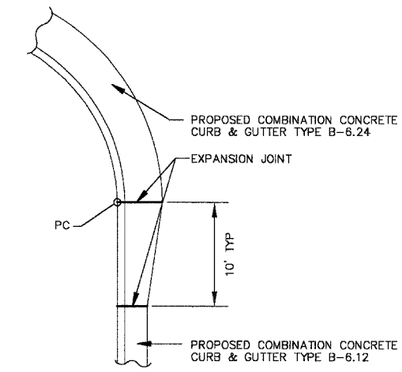

CURB AND GUTTER TRANSITION DETAIL

(N.T.S.)

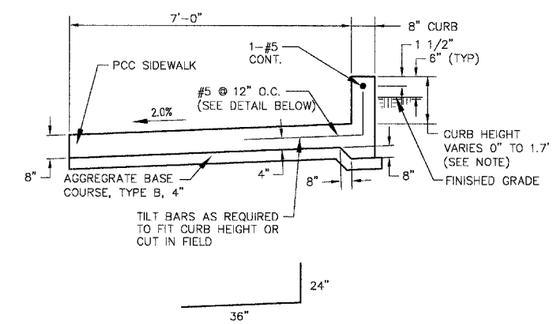

NOTE: TAPER CURB HEIGHT FROM 0" TO 1.7' WITHIN 8.5' TRANSITION (5:1 SLOPE)

PORTLAND CEMENT CONCRETE SIDEWALK, 8 INCH SPECIAL DETAIL

(N.T.S.)