F.A.U. RTE.	SECTION	COUNTY	TOTAL SHEETS	SHEET NO.
2652	00-00069-00-PV	DUPAGE	146	77
STA. 10+70.70		TO STA. 66+16.00		
FED. ROAD DIST. NO.	ILLINOIS	FED. AID PROJECT		

CONTRACT NO. 83781

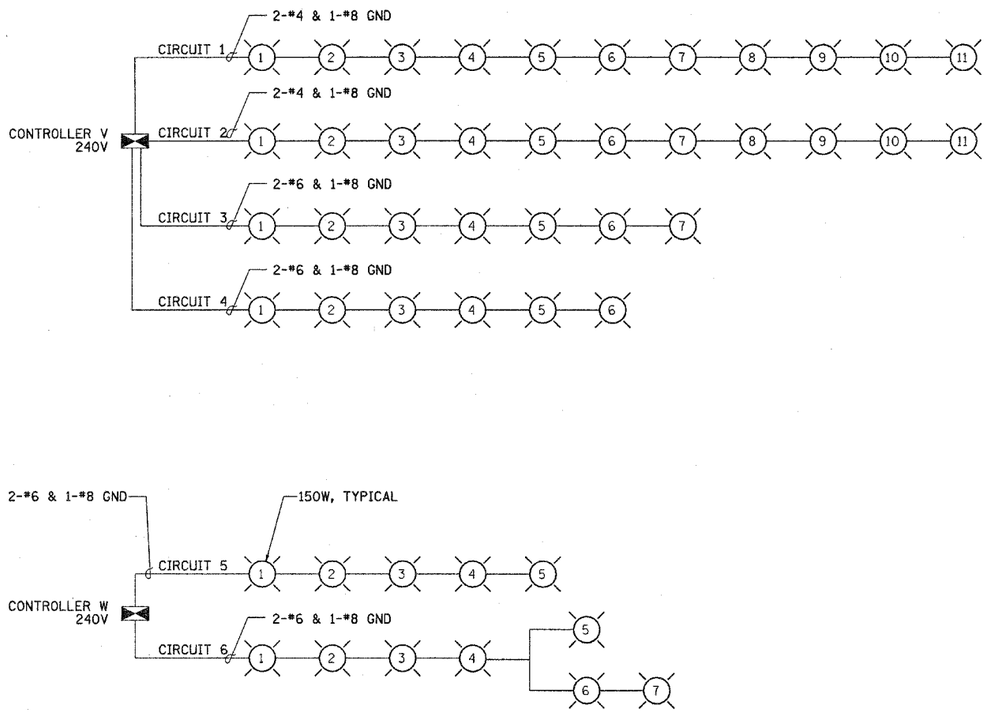

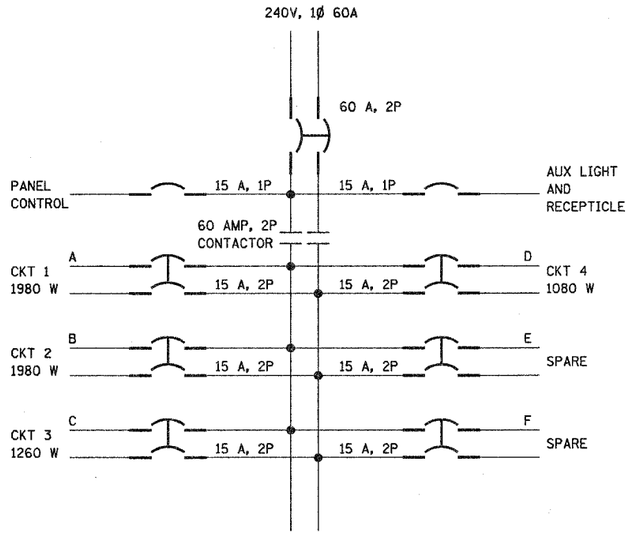

CONTROLLER V
TOTAL LOAD = 6300 W

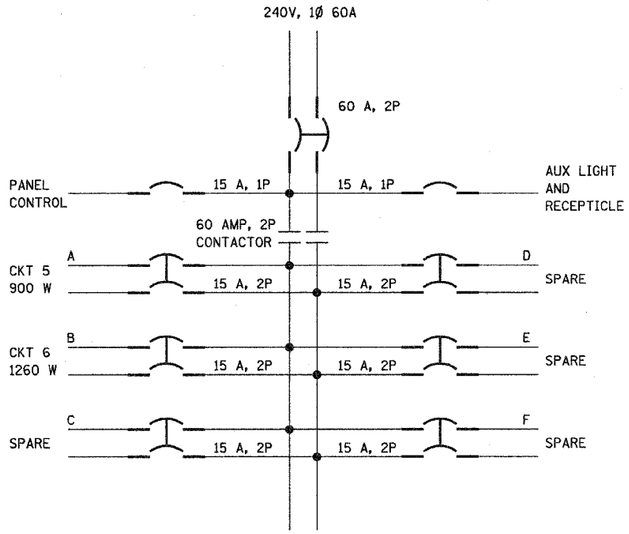

CONTROLLER W
TOTAL LOAD = 2160 W

LICENSED PROFESSIONAL ENGINEER
ERNEST E. LEAF
062-055760
STATE OF ILLINOIS
EXPIRES 11-30-2005

SIGNATURE AND DATE

REVISIONS	
NAME	DATE

Stanley Consultants INC.
8501 West Higgins Road
Suite 730
Chicago, Illinois 60631-2801 Illinois Firm Registration No.: 184-001533

VILLAGE OF VILLA PARK, ILLINOIS

LIGHTING SYSTEM SCHEMATIC

SCALE: NONE
DATE: 11-NOV-2004
DRAWN BY: E.D.
CHECKED BY: J.T.G.

PLAN
NOTE BOOK NO.
SURVEYED
PLOTTED
ALIGNMENT CHECKED
RT. OF WAY CHECKED
CADD FILE NAME
BY
DATE

PROFILE
NOTE BOOK NO.
SURVEYED
PLOTTED
GRADES CHECKED
B.M. NOTED
STRUCTURE NOTATNS CH'KD
BY
DATE

O:\15367\Phase2\07-Design\05-Dwgs\sht\367edt03.dgn
11-NOV-2004