76895

FAI ROUTE	SECTION	COUNTY	TOTAL SHEETS	SHEET NO.
64	82-9RA-I-2	ST. CLAIR	4	1

6-17-05 Letting, Item 146

STATE OF ILLINOIS
DEPARTMENT OF TRANSPORTATION
DIVISION OF HIGHWAYS

PROPOSED HIGHWAY PLANS

FOR INDEX OF SHEETS, SEE SHEET NO. 2

FAI ROUTE 64 (I-64)
SECTION 82-9RA-I-2
~~PROJECT~~
ST. CLAIR COUNTY
GATEWAY REST AREA VALVE REPLACEMENT
C-98-054-05

D-98-034-05

LOCATION OF SECTION INDICATED THUS:- ▬▬

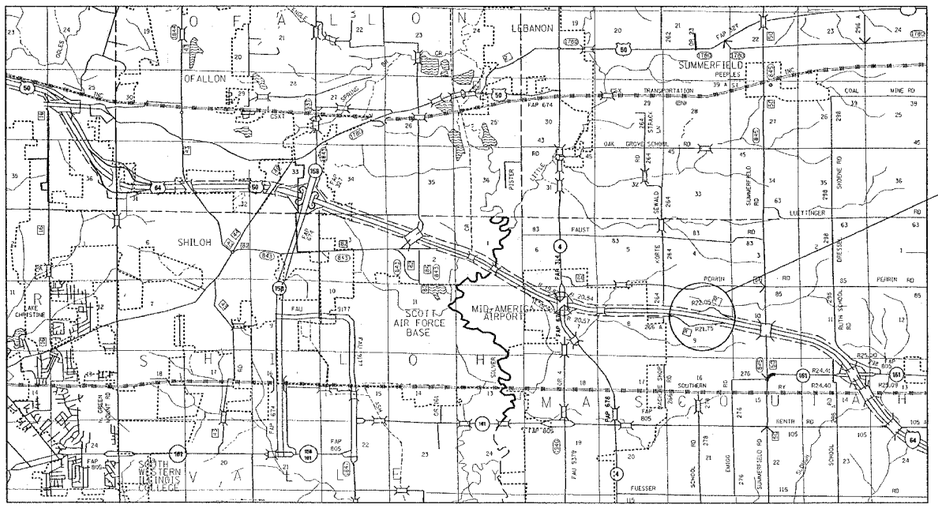

LAYOUT
0 MI 1 MI 2 MI 3 MI
1" = 1 MILE

LAT: 38.54915
LONG: -89.76332

MICROFILMED _____
REEL NUMBER _____
AWARDED _____
RESIDENT ENGINEER _____
AS BUILT CHANGES WERE MADE
ON THE FOLLOWING SHEETS

0 100' 200' 300' — 1" = 100'
0 10' 20' 30' — 1" = 10'
0 50' 100' — 1" = 50'
0 50' 100' — 1" = 40'
0 50' 100' — 1" = 30'
0 50' 100' — 1" = 20'

FULL SIZE PLANS HAVE BEEN PREPARED USING STANDARD ENGINEERING SCALES. REDUCED SIZED PLANS WILL NOT CONFORM TO STANDARD SCALES. IN MAKING MEASUREMENTS ON REDUCED PLANS, THE ABOVE SCALES MAY BE USED.

J.U.L.I.E.
JOINT UTILITY LOCATION INFORMATION FOR EXCAVATION
1-800-892-0123

CONTRACT NO. 76895

STATE OF ILLINOIS
DEPARTMENT OF TRANSPORTATION
DIVISION OF HIGHWAYS

SUBMITTED March 31 20 05
Mary C Kamis
DEPUTY DIRECTOR OF HIGHWAYS
REGION FIVE ENGINEER
May 13, 20 05
Mike Hine
ENGINEER OF DESIGN AND ENVIRONMENT
May 13, 20 05
Victor Modaff
DIRECTOR, DIVISION OF HIGHWAYS

PRINTED BY THE AUTHORITY OF THE STATE OF ILLINOIS

PROJECT ENGINEER: WENDA SOUTHERLAND (61) 346-3159
SQUAD LEADER: GREG HANCOCK (618) 346-3195

PLOT DATE: 3/31/2005

FAI ROUTE	SECTION	COUNTY	TOTAL SHEETS	SHEET NO
64	82-9RA-I-2	ST. CLAIR	4	2
STA.		TO STA.		
CONTRACT NO.: 76895				

INDEX OF SHEETS

1 COVER SHEET

2 INDEX OF SHEETS, GENERAL NOTES, AND HIGHWAY STANDARDS

3 SUMMARY OF QUANTITIES

4 INFLUENT & CONTROL STRUCTURE DETAILS

HIGHWAY STANDARDS

702001-05

GENERAL NOTES

1. ILLINOIS STATE LAW REQUIRES A 48-HOUR NOTICE BE GIVEN TO UTILITIES BEFORE DIGGING. FIELD MARKING OF FACILITIES MAY BE OBTAINED BY CONTACTING J.U.L.I.E. OR FOR NON-MEMBERS, THE UTILITY COMPANY DIRECTLY. AGENCIES KNOWN TO HAVE FACILITIES WITHIN THE PROJECT AREA ARE AS FOLLOWS:

   - CLINTON COUNTY ELECTRIC COOPERATIVE (ELECTRIC)
   - VILLAGE OF NEW BADEN (WATER)
   - VERIZON NORTH, INC. (COMMUNICATIONS)

   (MEMBERS OF J.U.L.I.E. (800) 892-0123 ARE INDICATED BY *. NON-J.U.L.I.E. MEMBERS MUST BE NOTIFIED INDIVIDUALLY.)

2. THE CONTRACTOR IS RESPONSIBLE FOR LOWERING THE LAGOONS BELOW THE DISCHARGE PIPES.

3. THE CONTRACTOR WILL NOT BE ABLE TO DISCHARGE LAGOONS INTO THE CREEK.

4. ALL BOLTS AND MATERIALS MUST BE STAINLESS STEEL.

5. THE REST AREAS WILL NEED TO BE CLOSED DURING REPLACEMENT OF VALVES. THIS CLOSURE MUST BE APPROVED BY THE DEPARTMENT.

6. THE CONTRACTOR MUST NOTIFY THE RESIDENT OF THE START DATE SO PROPER NOTIFICATION, SIGNING AND A PRESS RELEASE CAN BE COORDINATED FOR THE CLOSURE. THE PRESS RELEASE MUST BE ISSUED 5 DAYS BEFORE WORK IS TO BEGIN. ONCE WORK BEGINS IT MUST BE COMPLETED WITHIN 10 CONSECUTIVE CALENDAR DAYS. THE 10 CONSECUTIVE CALENDAR DAYS CAN NOT INCLUDE ANY LEGAL HOLIDAYS. THE LEGAL HOLIDAYS ARE LABOR DAY, THANKSGIVING DAY AND CHRISTMAS DAY. SEE SPECIAL PROVISIONS FOR THE PENALTY IF THE CONTRACTOR IS UNABLE TO COMPLETE THE WORK DURING THE ALLOTTED TIME.

7. RESIDENT SHALL CONTACT:

   JEFF ABEL DISTRICT OFFICE (618) 346-3283 (SIGNS)

   STEVE WHEELER WOOD RIVER MAINTENANCE YARD (618) 259-1440 (NOTIFICATION)

8. THE CONTRACTOR SHALL HAVE ALL MATERIALS ON HAND BEFORE WORK BEGINS. MATERIALS MUST BE APPROVED BY THE DEPARTMENT.

9. THE CONTRACTOR SHALL VERIFY ALL DIMENSIONS AND CONDITIONS IN THE FIELD PRIOR TO CONSTRUCTION AND ORDERING OF MATERIALS.

10. WHERE SECTION OR SUB SECTION MONUMENTS ARE ENCOUNTERED THE ENGINEER SHALL BE NOTIFIED BEFORE SUCH MONUMENTS ARE DISTURBED. THE CONTRACTOR SHALL PROTECT AND CAREFULLY PRESERVE ALL PROPERTY MARKERS AND MONUMENTS UNTIL THE OWNER, AN AUTHORIZED SURVEYOR OR AGENT HAS WITNESSED OR OTHERWISE REFERENCED THE LOCATION.

REVISIONS	
NAME	DATE

ILLINOIS DEPARTMENT OF TRANSPORTATION

INDEX OF SHEETS, GENERAL NOTES AND HIGHWAY STANDARDS

FAI ROUTE 64
SECTION 82-9RA-I-2
ST. CLAIR COUNTY

DRAWN BY:

PLOT DATE: 3/31/2005

PLAN
NOTE BOOK NO.
SURVEYED
PLOTTED
ALIGNMENT CHECKED
RT. OF WAY CHECKED
CADD FILE NAME
BY
DATE

$$DATE$$
3/31/2005
c:\projects\ed23405\plan\pln03405.dgn
*REF-
*REF-

ILLINOIS DEPARTMENT OF TRANSPORTATION

SUMMARY OF QUANTITIES

FAP ROUTE	SECTION	COUNTY	TOTAL SHEETS	SHEET NO
64	82-9RA-1-2	ST. CLAIR	4	3
STA.	TO STA.			
CONTRACT NO.: 76895				

SUMMARY OF QUANTITIES

CODE NO	ITEM	UNIT	Y022 TOTAL QUANTITIES	CONSTRUCTION TYPE CODE: URBAN STATE 100%		
67100100	MOBILIZATION	L SUM	1	1		
X0323343	MECHANICAL WORK	L SUM	1	1		
70101800	TRAFFIC CONTROL AND PROTECTION (SPECIAL)	L SUM	1	1		

SUMMARY OF QUANTITIES

CODE NO	ITEM	UNIT	TOTAL QUANTITIES	CONSTRUCTION TYPE CODE		

$$DATE$$
3/31/2005
c:\projects\ed03405\plan\pl-d03405e.dgn
$$USER$$
$$REF$$

PLOT DATE: 3/31/2005

FAI ROUTE	SECTION	COUNTY	TOTAL SHEETS	SHEET NO
64	82-9RA-I-2	ST. CLAIR	4	4
STA.		TO STA.		
CONTRACT NO.: 76895				

PLAN	NOTE BOOK	NO.	BY	DATE
SURVEYED				
PLOTTED				
ELEVATIONS CHECKED				
CADD FILE NAME				

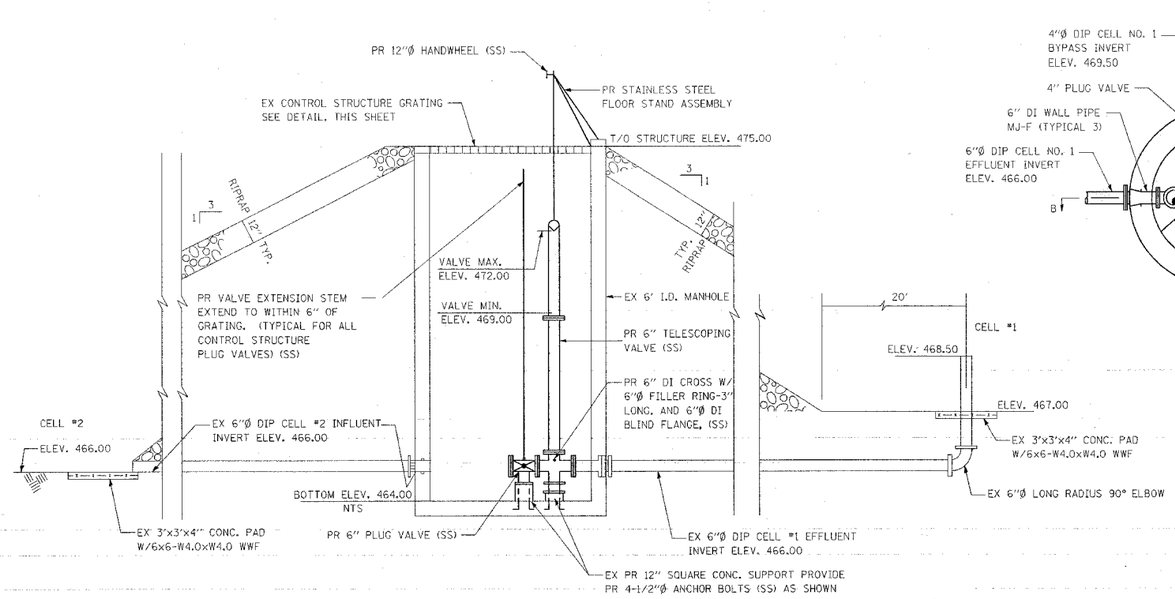

SECTION B

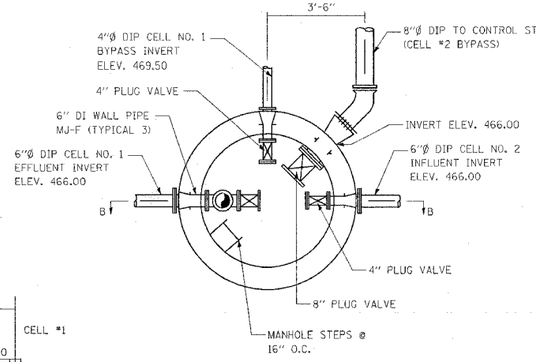

PLAN

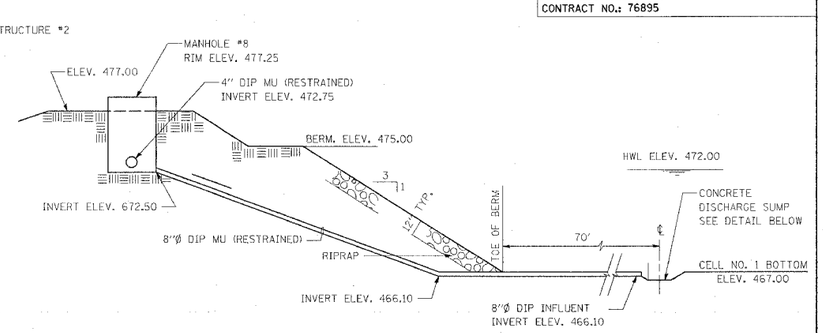

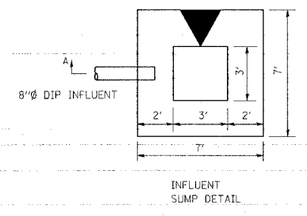

INFLUENT SUMP DETAIL

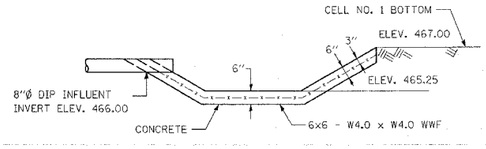

SECTION A

CELL NO. 1 INFLUENT DETAILS

(SS) STAINLESS STEEL

CONTROL STRUCTURE #1

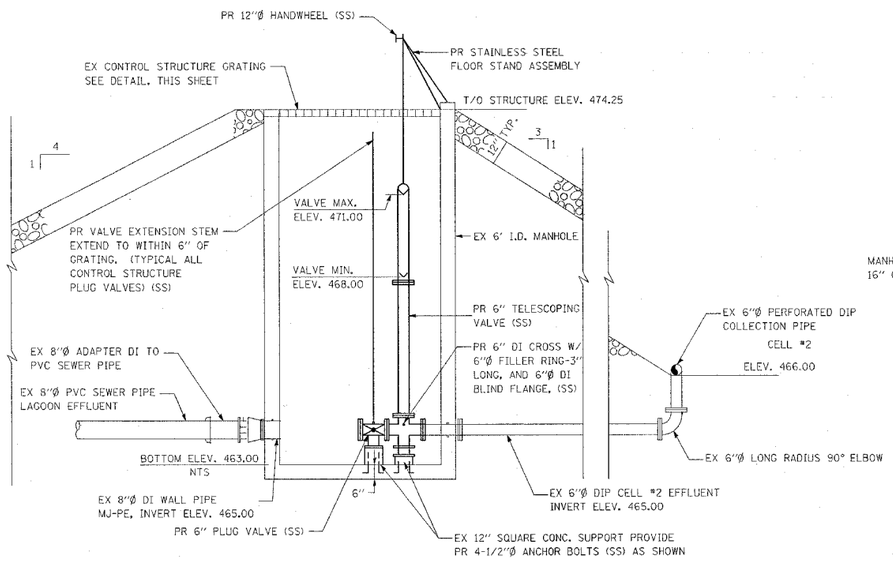

SECTION C

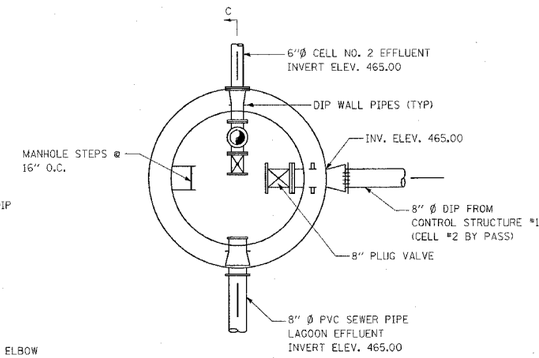

PLAN

CONTROL STRUCTURE #2

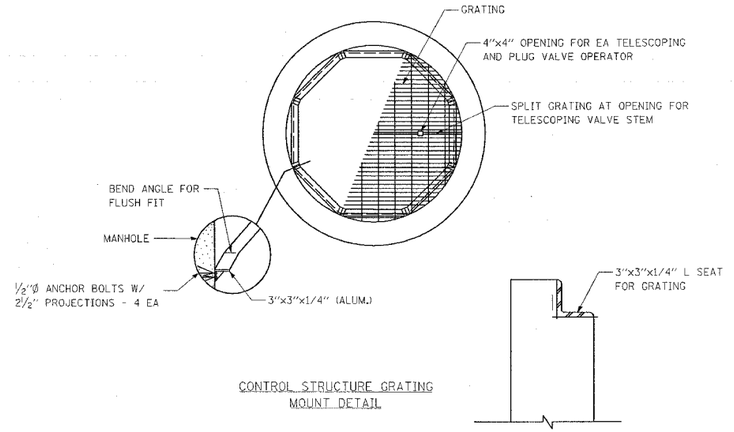

CONTROL STRUCTURE GRATING MOUNT DETAIL

DRAWINGS NOT TO SCALE

REVISIONS NAME	DATE

ILLINOIS DEPARTMENT OF TRANSPORTATION

INFLUENT & CONTROL STRUCTURE DETAILS

FAI ROUTE 64
SECTION 82-9RA-I-2
ST. CLAIR COUNTY

DRAWN BY:

PLOT DATE: 3/31/2005

$$DATE$$
3/31/2005
c:\projects\ed03405\plan\plt03405a.dgn
ATEC
MEC