FAI ROUTE	SECTION	COUNTY	TOTAL SHEETS	SHEET NO
64	82-7RS-1, 82-7HB-1,2I	ST. CLAIR	89	10
STA.		TO STA.		

CONTRACT NO.: 76813

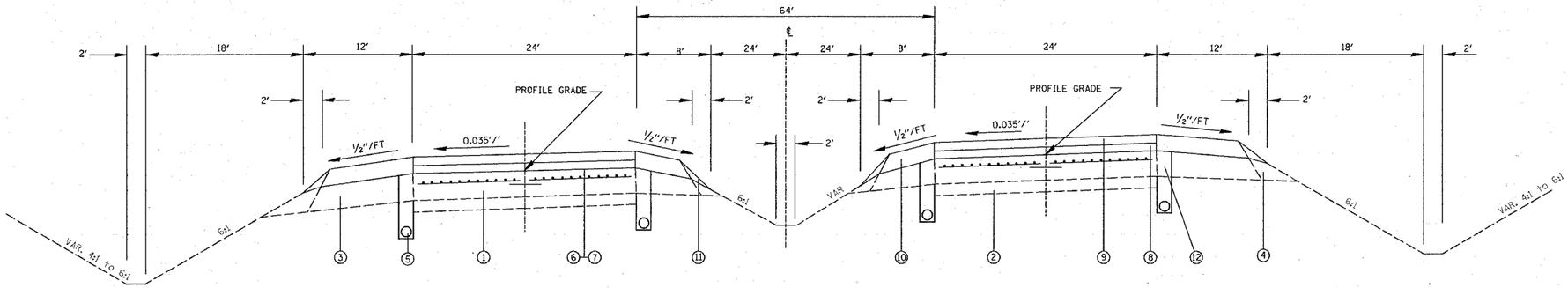

TYPICAL SECTION I-64

STA. 744+15 TO STA. 782+26.74

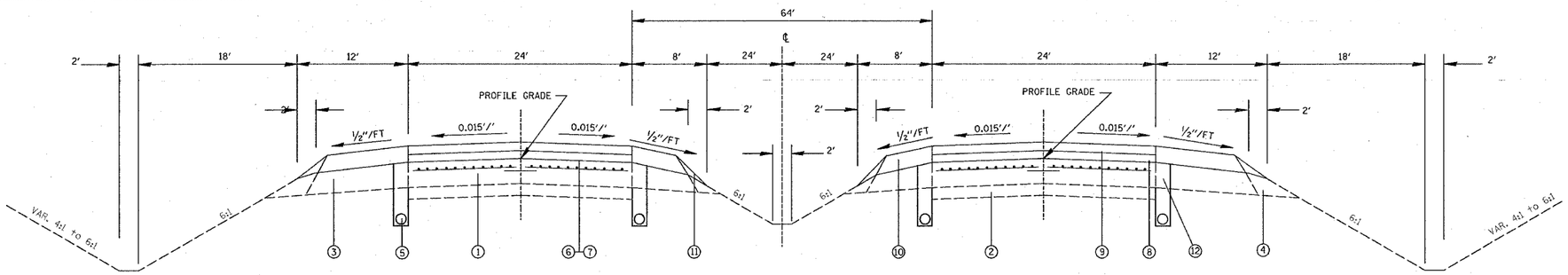

TYPICAL SECTION I-64

STA. 784+26.74 TO STA. 858+48.21
STA. 904+72.90 TO STA. 945+00

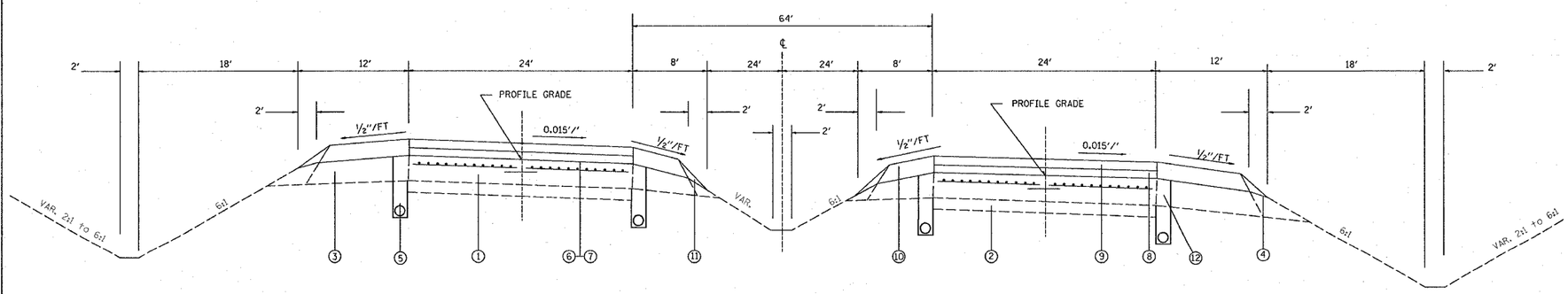

TYPICAL SECTION I-64

STA. 860+48.21 TO STA. 902+72.90

LEGEND

① EXISTING CONT. REINFORCED P.C.C. PAVEMENT 8"
② EXISTING STABILIZED SUB-BASE 4"
③ EXISTING STABILIZED SHOULDERS 8"
④ EXISTING AGGREGATE SHOULDER
⑤ PROPOSED PIPE UNDERDRAINS 4"
⑥ PROPOSED BITUMINOUS MATERIALS (PRIME COAT)
⑦ PROPOSED AGGREGRATE (PRIME COAT)
⑧ PROPOSED BITUMINOUS BINDER COURSE, N=105, 2¼"
⑨ PROPOSED BITUMINOUS CONCRETE SURFACE COURSE, STONE MATRIX ASPHALT, 1½"
⑩ PROPOSED BITUMINOUS SHOULDERS SUPERPAVE
⑪ PROPOSED AGGREGATE SHOULDER WEDGE, TYPE B
⑫ PROPOSED SHOULDER REMOVAL AND REPLACEMENT 8"

PLAN	SURVEYED	BY	DATE
	PLOTTED		
	ALIGNMENT CHECKED		
NOTE BOOK	RT. OF WAY CHECKED		
NO.	CADD FILE NAME		

REVISIONS

NAME	DATE

ILLINOIS DEPARTMENT OF TRANSPORTATION

PROPOSED TYPICAL SECTIONS I-64

FAI 64
SECTION 82-7RS-1, 82-7HB-1, 2I
ST. CLAIR COUNTY

DRAWN BY:

PLOT DATE: *DATE-TIME*

NOTES
CONTE-TIME
CONTE-TIME
*REF-
*REF-