STATE OF ILLINOIS
DEPARTMENT OF TRANSPORTATION

ROUTE NO.	SECTION	COUNTY	TOTAL SHEETS	SHEET NO.
			8	18
FED. ROAD DIST. NO. 7		ILLINOIS	FED. AID PROJECT-	

SHEET NO. 11
11 SHEETS

Contract #68492

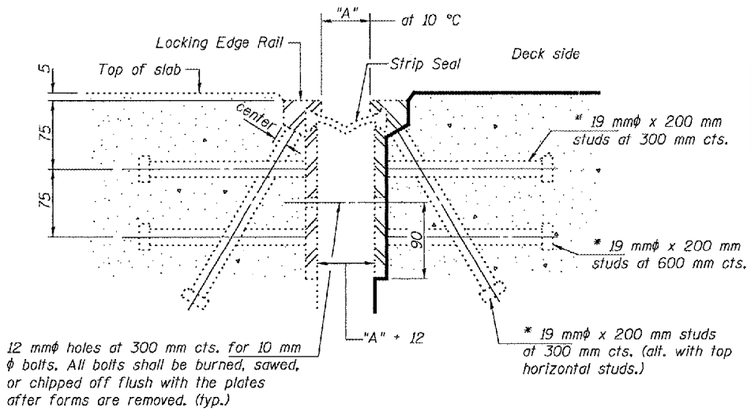

Required Strip Seal rated movement	"A"
50 mm	42

SECTION THRU ROLLED RAIL EXP. JOINT

* Granular or solid flux filled headed studs conforming to Article 1006.32 of the Std. Specs., automatically end welded.

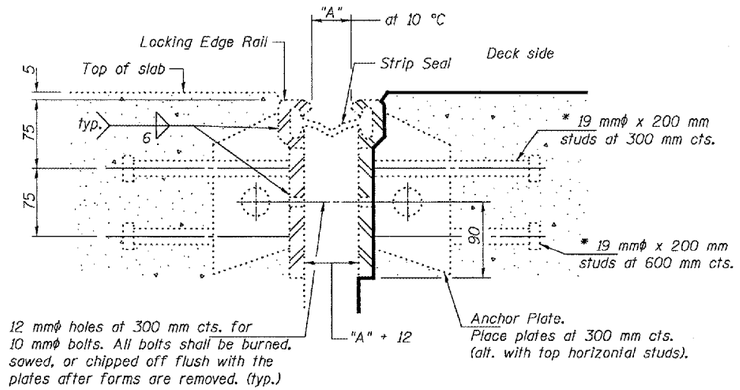

SECTION THRU WELDED RAIL EXP. JOINT

GENERAL NOTES

The strip seal shall be made continuous and shall have a minimum thickness of 6 mm. The configuration of the strip seal shall match the configuration of the Locking Edge Rails.

The height and thickness of the Locking Edge Rails shown are minimum dimensions. The actual configuration of the Locking Edge Rails and matching strip seal may vary from manufacturer to manufacturer. Flanged edge rails will not be allowed.

Locking Edge Rails may be spliced at slope discontinuities and stage construction joints.

The manufacturer's recommended installation methods shall be followed.

The joint opening and deck dimensions detailed on the superstructure are based on a preformed joint seal. If the contractor elects to use the alternate strip seal joint, the opening and deck dimensions shall be modified according to the dimensions detailed on this sheet. Required modifications shall be made at no additional cost to the State.

All dimensions are in millimeters (mm) except as noted.

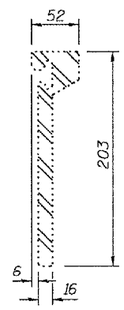

ROLLED (EXTRUDED) RAIL

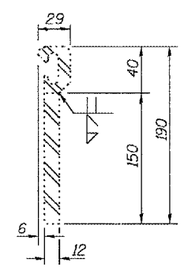

WELDED RAIL

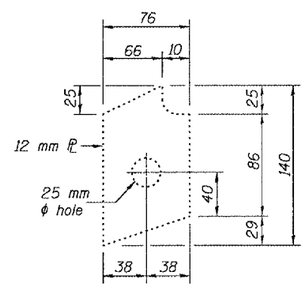

ANCHOR ℄
(for welded rail)

LOCKING EDGE RAILS

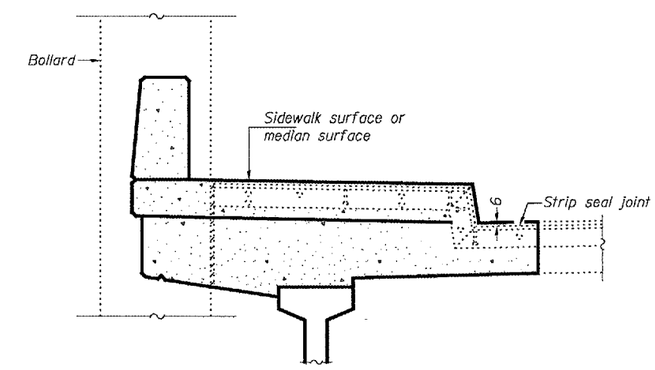

AT SIDEWALK OR MEDIAN

TYPICAL END TREATMENTS

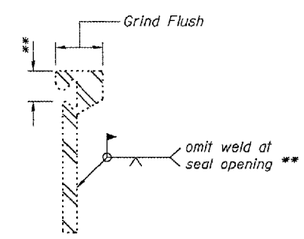

LOCKING EDGE RAIL SPLICE

The inside of the locking edge rail groove shall be free of weld residue.

DESIGNED	DAB
CHECKED	SJB
DRAWN	baliva
CHECKED	DAB SJB

May 10, 2005
EXAMINED John A. Morris
ENGINEER OF STRUCTURAL SERVICES
PASSED Ralph E. Anderson
ENGINEER OF BRIDGES AND STRUCTURES

THIS SHEET FOR INFORMATION ONLY

EXPANSION JOINT DETAILS
SHERIDAN ROAD OVER
FAI ROUTE 74 (I-74)
PEORIA COUNTY
SN 072-0193