F.A.I. RTE.	SECTION	COUNTY	TOTAL SHEETS	SHEET NO.
74	(72-7)R-3	PEORIA	1360	1340
STA.		TO STA.		
FED. ROAD DIST. NO.		ILLINOIS	FED. AID PROJECT	

68200

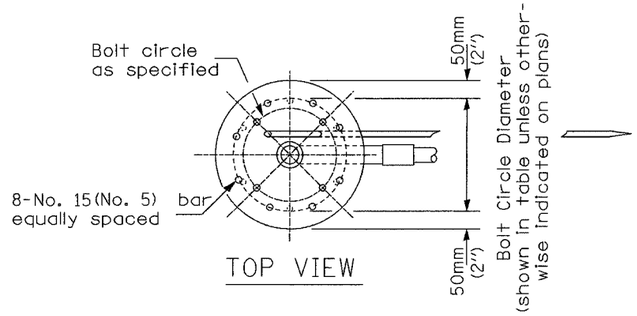

TOP VIEW

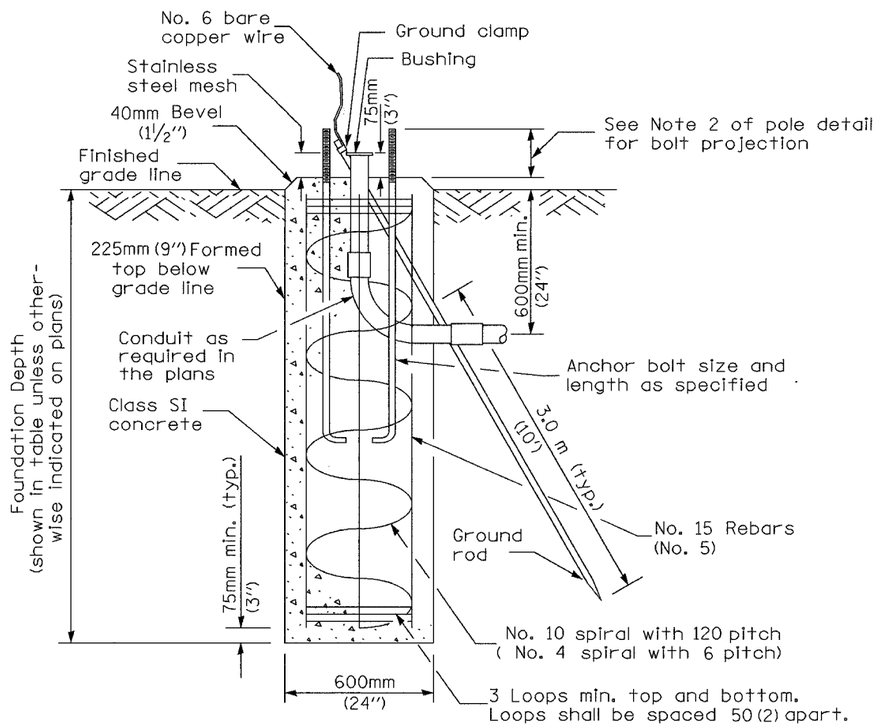

Pole Height	Bolt Circle Diameter	Foundation depth
9.1m (30')	380mm (15.0")	2.5m (8'-0")

Notes:

1. The Engineer shall determine the class of soil during excavation. These foundation depths are for sites which have cohesive soils (clayey silt, sandy clay, etc.) along the length of the shaft, with an average Unconfined Compressive Strength (Qu) > 100 kPa (1.0 tsf). This strength shall be verified by boring data prior to construction or with testing by the Engineer during foundation drilling. The Bureau of Bridges & Structures should be contacted for a revised design if other conditions are encountered.

2. The anchor bolts and raceways shall be properly secured in place.

3. Concrete shall be class "SI" Concrete and the foundation must be cured for ten (10) days before the pole is erected.

4. The cable trench shall be backfilled and firmly compacted before the pole is erected.

5. For sloping grades, the foundation design depth shall be increased by the corresponding cross slope shaft depth increase factor given by:
   A. Cohesive soil - cross slope shaft increase factor 0.009 x (slope angle) + 1.0
   B. Granular soil - cross slope shaft increase factor 0.00005 x (slope angle) + 1.0

6. Install grounding system in accordance with Section 807 of the IDOT Standard Specifications.

ITS SHEET 9 OF 13

REVISIONS	
NAME	DATE

Edwards AND Kelcey

ILLINOIS DEPARTMENT OF TRANSPORTATION
ITS PLAN

NONINTRUSIVE DETECTOR
POLE
FOUNDATION DETAIL

SCALE
DATE 11/02/04
DRAWN BY CADD
CHECKED BY MJL

p:\01001901\its final design\cadd\wk files\contract 10\ed1006-7e.dgn

PRINTED: 11/05/2004

CONTRACT 10