CONTRACT NO. 64178

F.A.P. RTE.	SECTION	COUNTY	TOTAL SHEETS	SHEET NO.
549	116RS-1	OGLE	593	238
STA.		TO STA.		
FED. ROAD DIST. NO.	ILLINOIS	FED. AID PROJECT		

MANHOLES, SPECIAL

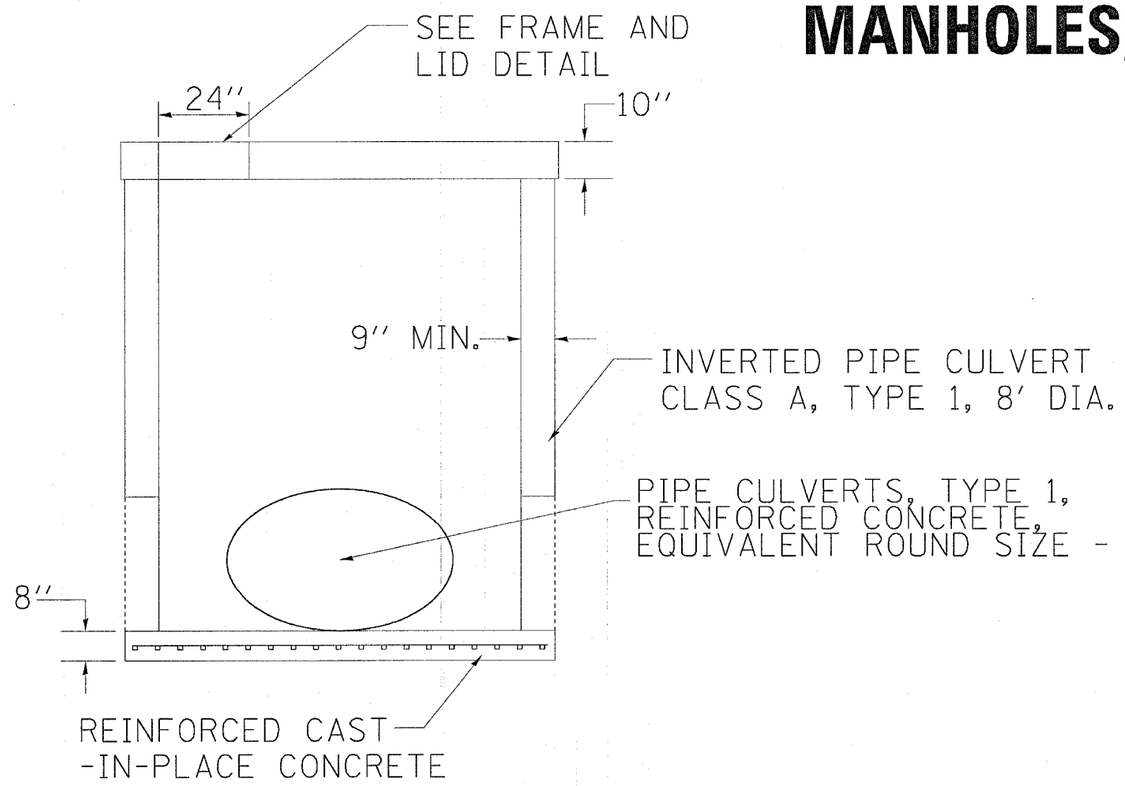

ELEVATION OF MH22A

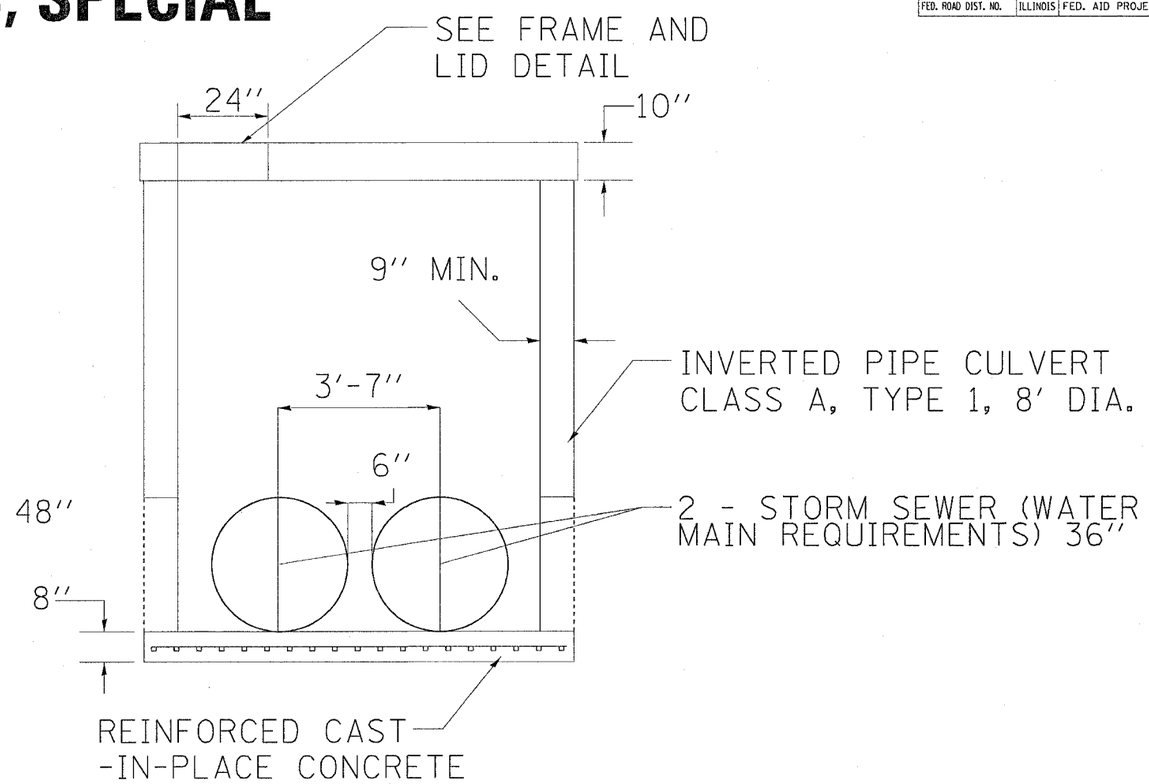

ELEVATION OF MH21

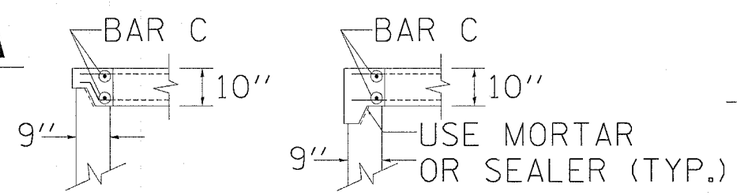

ALTERNATE JOINT CONFIGURATIONS

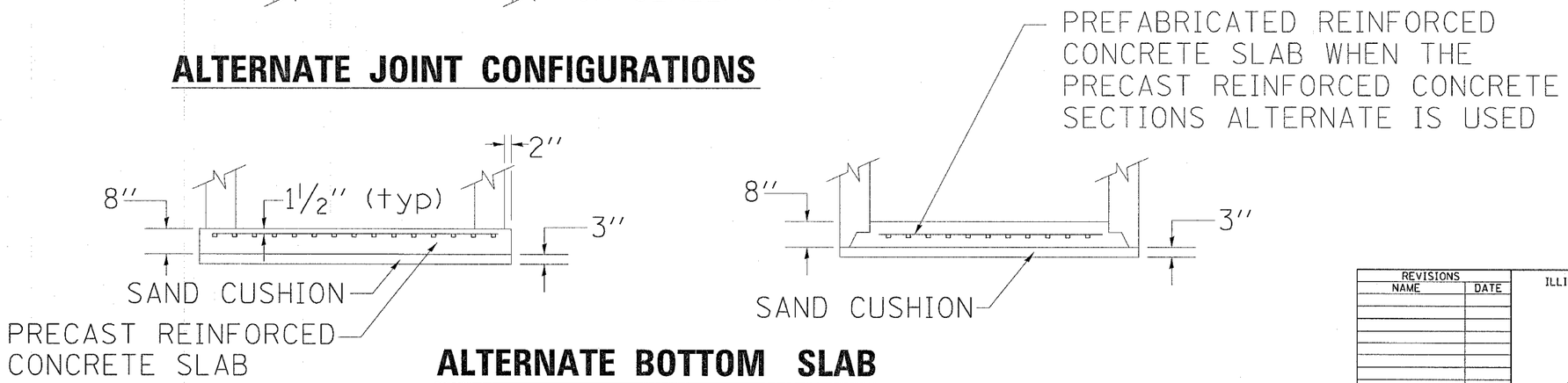

ALTERNATE BOTTOM SLAB

REVISIONS	
NAME	DATE

ILLINOIS DEPARTMENT OF TRANSPORTATION

SCALE: VERT. HORIZ.

DATE

DRAWN BY

CHECKED BY

PLOT DATE = Wed Feb 09 07:46:16 2005
FILE NAME = E:\projects\p220497\s220497epl.dgn
PLOT SCALE = 38.2185 ' / IN.
REFERENCE = ARCF4