STATE OF ILLINOIS
DEPARTMENT OF TRANSPORTATION

ROUTE NO.	SECTION	COUNTY	TOTAL SHEETS	SHEET NO.
		Cook	14	10
FED. ROAD DIST. NO. 7		ILLINOIS	FED. AID PROJECT-	

SHEET NO. 4
4 SHEETS

Contract Number: 62912

Notes:
All Posts shall be normal to parapet.
All joints in rail shall be spliced per detail.
Provide 1-1/8" and 2-1/16" Aluminum Shims for 25% of the Posts. Rail elements shall be parallel to Grade-high spots will be ground and low spots shimmed.
This work shall be paid for at the contract unit price per foot for Removing and Re-erecting Existing Railing.
Horizontal rail element & rail posts shown are for information only.

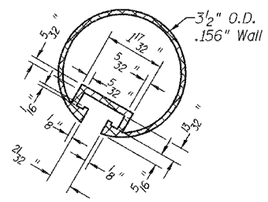

SECTION THRU TOP RAIL

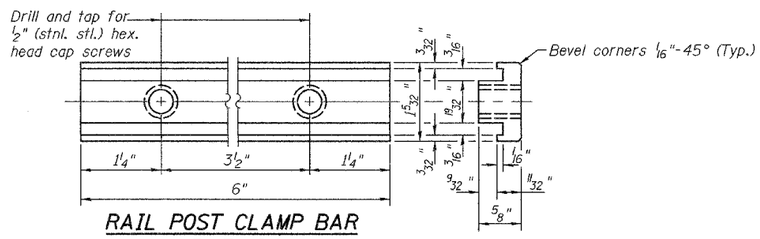

RAIL POST CLAMP BAR
For Top Rail

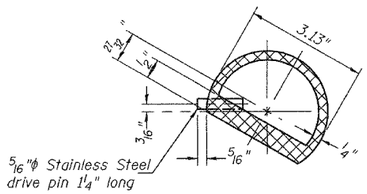

SECTION THRU SPLICE
TOP RAIL

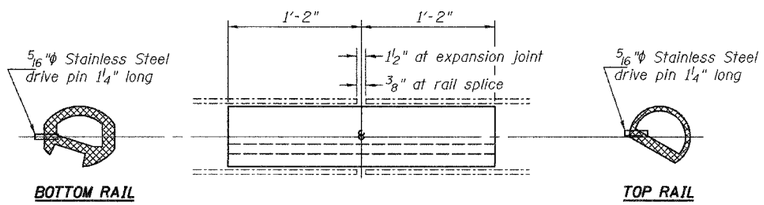

BOTTOM RAIL

RAIL SPLICE

TOP RAIL

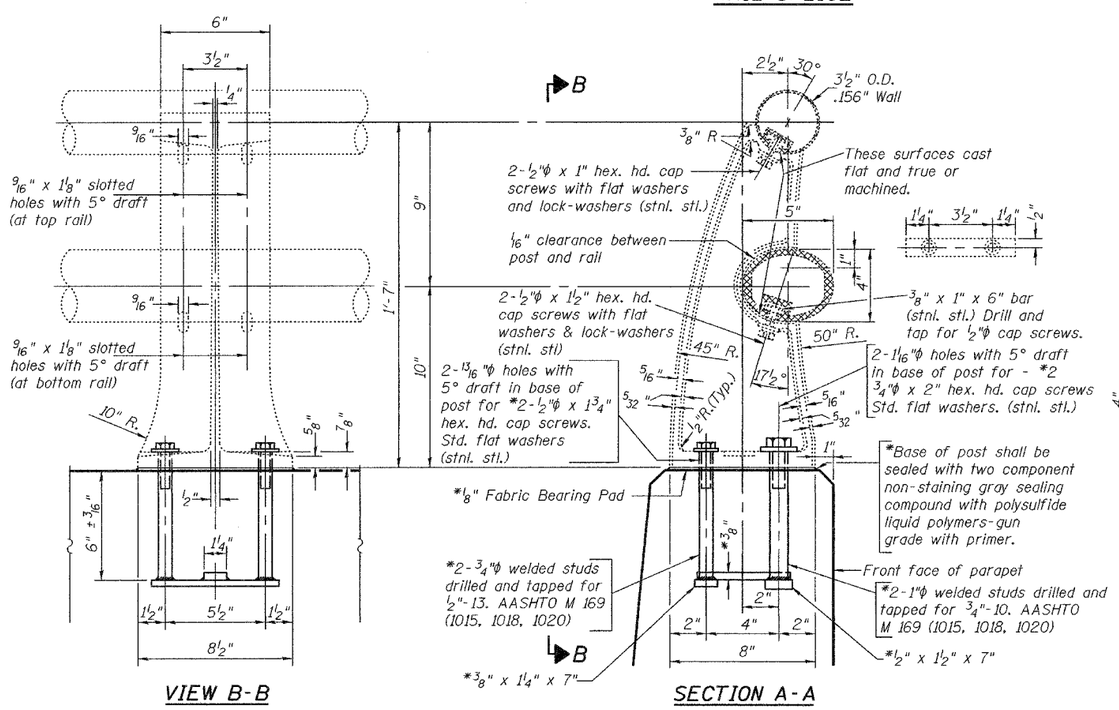

VIEW B-B

SECTION A-A

RAIL POST DETAILS

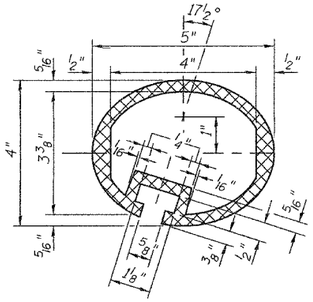

SEC. THRU ELLIPTICAL RAIL SECTION

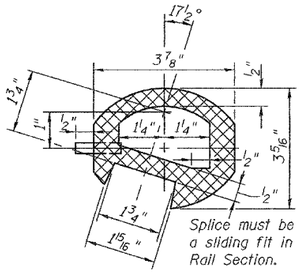

SEC. THRU SPLICE

* New Rail Post anchorage devices will be required at each location where posts are connected to new construction. Cost shall be included with Removing and Re-erecting Existing Railing.

DESIGNED	V.H.V.
CHECKED	S.J.B.
DRAWN	Drew Christopher
CHECKED	V.H.V. S.J.B.

May 3, 2005
EXAMINED John A. Morris
ENGINEER OF STRUCTURAL SERVICES
PASSED Ralph E. Anderson
ENGINEER OF BRIDGES AND STRUCTURES

ALUMINUM RAILING DETAIL
F.A.P. RT. 343
COOK COUNTY
SN 016-0525

...\projects\mac00042\0160525.dgn 5/3/2005 4:14:52 PM