F.A.U. RTE.	SECTION	COUNTY	TOTAL SHEETS	SHEET NO.
1602	2004-021TS	COOK	25	20
STA.		TO STA.		
FED. ROAD DIST. NO.	ILLINOIS	FED. AID PROJECT		

CONTRACT NO. 62740

CONTROLLER SEQUENCE

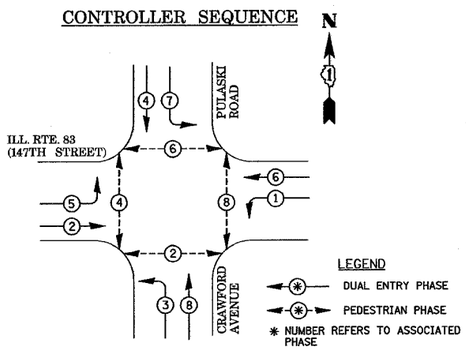

PHASE DESIGNATION DIAGRAM

DUAL ENTRY - ALL LEGS
PROTECTED/PERMITTED LEFT TURN PHASING

EMERGENCY VEHICLE PREEMPTION SEQUENCE

FOR DUAL ENTRY OPERATION - ALL LEGS

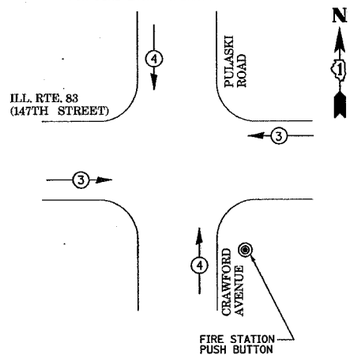

PROPOSED PRIORITY LANES		
PRIORITY LANE INTERVAL	3	4
MOVEMENT	← →	↑ ↓

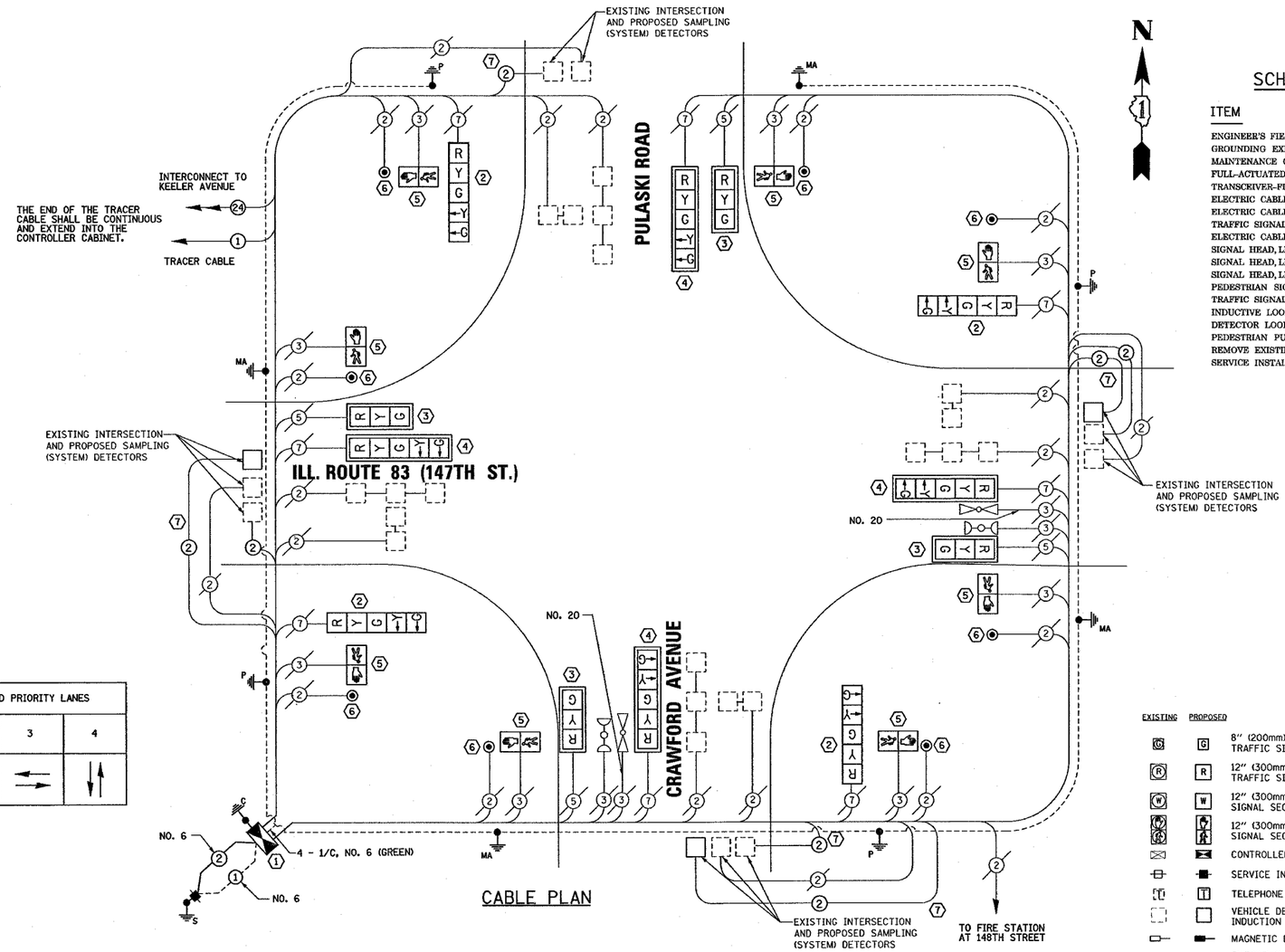

CABLE PLAN

SCHEDULE OF QUANTITIES

ITEM	UNIT	QUANTITY
ENGINEER'S FIELD OFFICE, TYPE A	CAL MO	0.5
GROUNDING EXISTING HANDHOLE FRAME AND COVER	EACH	4
MAINTENANCE OF EXISTING TRAFFIC SIGNAL INSTALLATION	EACH	1
FULL-ACTUATED CONTROLLER AND TYPE IV CABINET, SPECIAL	EACH	1
TRANSCEIVER-FIBER OPTIC	EACH	1
ELECTRIC CABLE IN CONDUIT, GROUNDING, NO. 6 1C	FOOT	853
ELECTRIC CABLE IN CONDUIT, LEAD-IN, NO. 14 1 PAIR	FOOT	2742
TRAFFIC SIGNAL POST, GALVANIZED STEEL, 16 FT.	EACH	3
ELECTRIC CABLE IN CONDUIT, SERVICE, NO. 6 2C	FOOT	178
SIGNAL HEAD, LED, 1-FACE, 3-SECTION, MAST ARM MOUNTED	EACH	4
SIGNAL HEAD, LED, 1-FACE, 5-SECTION, BRACKET MOUNTED	EACH	4
SIGNAL HEAD, LED, 1-FACE, 5-SECTION, MAST ARM MOUNTED	EACH	4
PEDESTRIAN SIGNAL HEAD, LED, 1-FACE, BRACKET MOUNTED	EACH	8
TRAFFIC SIGNAL BACKPLATE, LOUVERED, ALUMINUM	EACH	8
INDUCTIVE LOOP DETECTOR	EACH	17
DETECTOR LOOP, TYPE 1	FOOT	73
PEDESTRIAN PUSH BUTTON	EACH	8
REMOVE EXISTING TRAFFIC SIGNAL EQUIPMENT	EACH	1
SERVICE INSTALLATION, POLE MOUNTED	EACH	1

CABLE PLAN LEGEND

EXISTING	PROPOSED	
(G)	G	8" (200mm) TRAFFIC SIGNAL SECTION
(R)	R	12" (300mm) TRAFFIC SIGNAL SECTION
(W)	W	12" (300mm) PEDESTRIAN SIGNAL SECTION
		12" (300mm) PEDESTRIAN SIGNAL SECTION
		CONTROLLER CABINET
		SERVICE INSTALLATION
	T	TELEPHONE CONNECTION
		VEHICLE DETECTOR, INDUCTION LOOP
		MAGNETIC DETECTOR
		EMERGENCY VEHICLE LIGHT DETECTOR
		CONFIRMATION BEACON
		PUSHBUTTON DETECTOR
2	2	DENOTES NUMBER OF CONDUCTORS, ALL CABLE NO. 14 EXCEPT AS INDICATED. ALL LOOOP DETECTOR CABLE TO BE SHIELDED.

EXISTING	PROPOSED	
1	1	GROUND CABLE IN CONDUIT NO. 6 SOLID COPPER (GREEN)
24	24	FIBER OPTIC CABLE IN CONDUIT NO. 62.5/125 MM12F SM12F
R Y G G Y R "P"	R Y G G Y R "P"	SIGNAL FACE WITH BACKPLATE, "P" INDICATES PROGRAMMED HEAD
"E"		RAILROAD CONTROL CABINET
"E"		ILLUMINATED SIGN "NO LEFT TURN"
"E"		ILLUMINATED SIGN "NO RIGHT TURN"
H/C	C	GROUND ROD AT HANDHOLE (H), DOUBLE HANDHOLE (H), OR CONTROLLER (C).
P	P	GROUND ROD AT POST (P), OR MAST ARM POLE (MA).
S	S	GROUND ROD AT ELECTRIC SERVICE INSTALLATION
		MICROWAVE VEHICLE SENSOR

I.D.O.T. TRAFFIC SIGNAL INSTALLATION ELECTRICAL SERVICE REQUIREMENTS					TOTAL WATTAGE
TYPE	NO. LAMPS X	WATTAGE INCAND.	WATTAGE LED	X % OPERATION	
SIGNAL (RED)	12	135	17	0.50	102.0
(YELLOW)	12	135	25	0.25	75.0
(GREEN)	12	135	15	0.25	45.0
ARROW	16	135	12	0.10	19.2
PED. SIGNAL	8	90	25	1.00	200.0
CONTROLLER	1	100	100	1.00	100.0
				TOTAL =	541.2

ENERGY COSTS - BILLED TO: VILLAGE OF MIDLOTHIAN
(ADDRESS) 14801 S. PULASKI ROAD
MIDLOTHIAN, IL 60445

ENERGY SUPPLY - CONTACT: LARRY WOODLE
PHONE: (708) 235-2327
COMPANY: COMMONWEALTH EDISON

CONSTRUCTION NOTES:

1. REMOVE EXISTING CONTROLLER AND CABINET. INSTALL NEW CONTROLLER AND TYPE IV CABINET, SPECIAL. RE-USE EXISTING FOUNDATION. RELOCATE EXISTING EMERGENCY PRIORITY SYSTEM, PHASING UNIT TO NEW CONTROLLER CABINET. RELOCATION OF THE EXISTING EMERGENCY PRIORITY SYSTEM SHALL BE INCLUDED IN THE NEW CONTROLLER UNIT PRICE.
2. REMOVE EXISTING SIGNAL HEAD, 2-FACE, 1-3 SECTION, 1-5 SECTION, BRACKET MOUNTED. INSTALL NEW SIGNAL HEAD, L.E.D. 1-FACE, 5 SECTION, BRACKET MOUNTED.
3. REMOVE EXISTING SIGNAL HEAD, 1-FACE, 3-SECTION, MAST ARM MOUNTED. INSTALL NEW SIGNAL HEAD, L.E.D., 1-FACE, 3-SECTION, MAST ARM MOUNTED AND TRAFFIC SIGNAL BACKPLATE.
4. REMOVE EXISTING SIGNAL HEAD, 1-FACE, 5-SECTION, MAST ARM MOUNTED. INSTALL NEW SIGNAL HEAD, L.E.D., 1-FACE, 5-SECTION, MAST ARM MOUNTED AND TRAFFIC SIGNAL BACKPLATE.
5. REMOVE EXISTING PEDESTRIAN SIGNAL HEAD, 1-FACE BRACKET MOUNTED. INSTALL NEW PEDESTRIAN SIGNAL HEAD, L.E.D., 1-FACE, BRACKET MOUNTED.
6. REMOVE EXISTING PEDESTRIAN PUSH-BUTTON. INSTALL NEW PEDESTRIAN PUSH-BUTTON.
7. INSTALL NEW ELECTRICAL CABLE IN CONDUIT, LEAD-IN, NO.14, 1 PAIR FOR SYSTEM DETECTION

FOUNDATION (DEPTH)	(FT.)	(m)	CABLE SLACK	(FT.)	(m)	VERTICAL	(FT.)	(m)
TYPE A - POST	4	(1.2)	HANDHOLE	6.5	(2.0)	ALL FOUNDATIONS	3.5	(1.0)
D - FOUNDATION	4	(1.2)	DOUBLE HANDHOLE	13	(4.0)	MAST ARM (L) POLE	20' + L - 2 = (6m+L-0.6m)=	
C - M. ARM POLE			SIGNAL POST	2	(1.0)			
24" (600mm)	10	(3.0)	CONTROLLER CAB.	1	(0.5)	BRACKET MOUNTED	13	(4.0)
30" (750mm)	15	(4.6)	FIBER OPTIC	13	(4.0)	PED. PUSHBUTTON	4	(1.2)
			ELECTRIC SERVICE	1	(0.5)	ELECTRIC SERVICE	13.5	(4.1)
			GROUND CABLE	1	(0.5)	SERVICE TO GROUND	13.5	(4.1)
						POST MOUNTED	6	(1.8)

NOTE:
THE TRAFFIC SIGNAL CONTROL EQUIPMENT FOR THIS PROJECT SHALL BE "ECONOLITE" TO MATCH THE ADJACENT SYSTEM.

SETON ENGINEERING
SERVICE CORPORATION
CIVIL ENGINEERS
19 S. BOTHWELL STREET
PALATINE, ILLINOIS 60067
VOICE: 847-776-7200 FAX: 847-776-7239
SETON PROJECT # 2002001-207-281

REVISIONS	
NAME	DATE

ILLINOIS DEPARTMENT OF TRANSPORTATION

CABLE PLAN, PHASE DESIGNATION DIAGRAM, EMERGENCY VEHICLE PREEMPTION SEQUENCE AND SCHEDULE OF QUANTITIES

ILL. ROUTE 83 (147TH STREET) AT PULASKI ROAD
MIDLOTHIAN, ILLINOIS

SCALE: N.T.S.
DATE 09-20-2004

DRAWN BY CWC
DESIGNED BY VO
CHECKED BY TJM