F.A.I. RTE.	SECTION	COUNTY	TOTAL SHEETS	SHEET NO.
94	*	COOK	907	682
STA.		TO STA.		
FED. ROAD DIST. NO.	ILLINOIS	FED. AID PROJECT		

* (1516.1, 1717 & 1818) R-9

62695

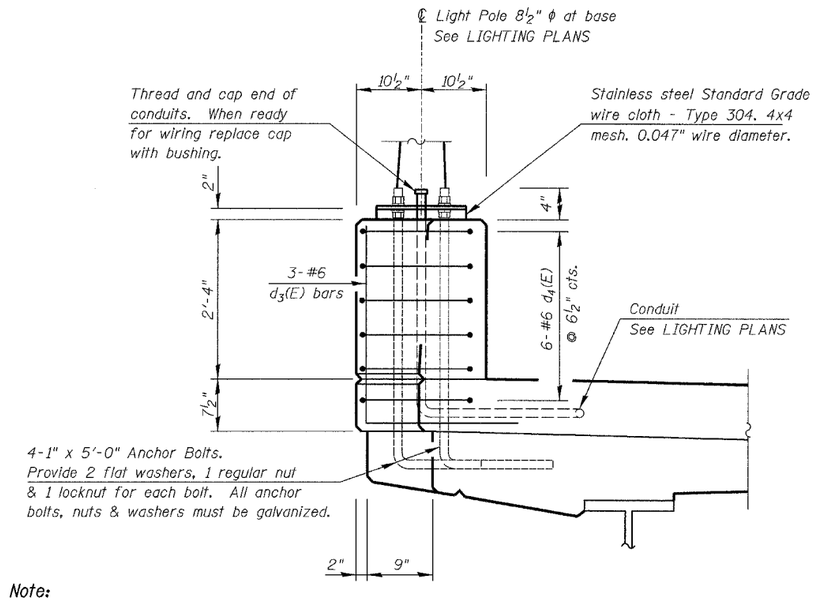

Note:

Cost of anchor bolts and conduits are included with "Concrete Superstructure".

SECTION A-A

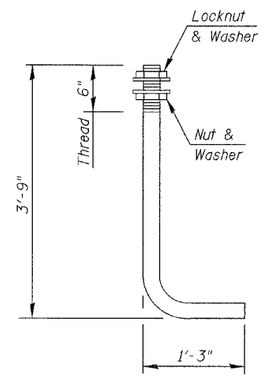

1" ANCHOR BOLT

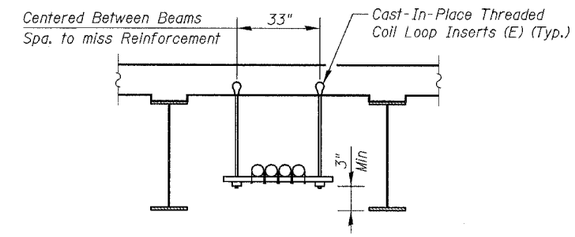

CONDUIT SUPPORT DETAIL

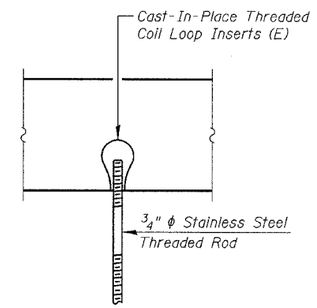

THREADED COIL LOOP INSERTS DETAIL

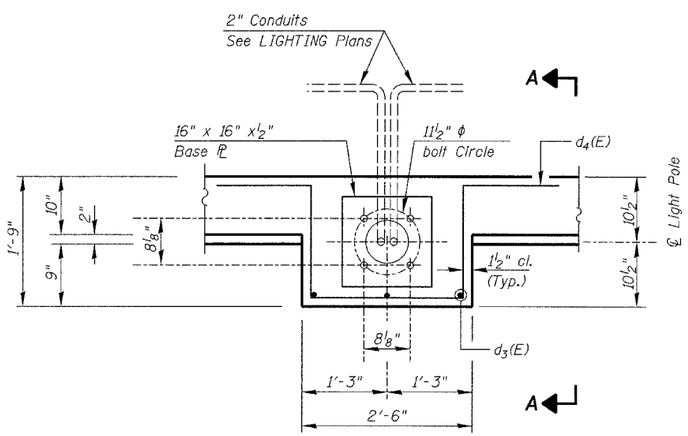

PLAN

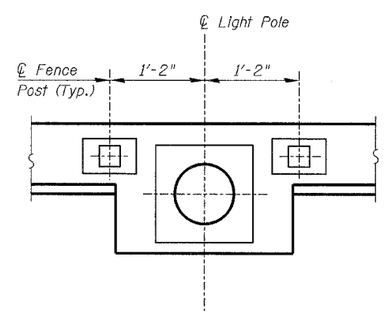

PLAN - LIGHT POLE & FENCE POSTS

LIGHT POLE PEDESTAL DETAILS

Notes:

Reinforcement Bars designated (E) shall be epoxy coated.

See DWG. S-13 for Deck Misc. Details, and Bill of Material.

For additional Conduit Support Details, SEE TRAFFIC SIGNAL PLANS

Work this DWG. with DWGS. S-09 thru S-11 & S-13.

DWG. S-12 of 42

REVISIONS	
NAME	DATE
REVISED	04/15/05

ILLINOIS DEPARTMENT OF TRANSPORTATION

LIGHT POLE PEDESTAL DETAILS

76TH STREET OVER FAI-94

FAP ROUTE 1541 SECTION 1818 R-9

COOK COUNTY

STATION 73+49.33

STRUCTURE NUMBER 016-2850

SCALE: NONE DESIGNED BY: TB DRAWN BY: TL

DATE: March 25, 2005 CHECKED BY: WPM CHECKED BY: WPM

KNIGHT Engineers & Architects

FILE: L:\16592.02\Cad\Sheets\Revised 17B\04-15-05\6592-S285D-DK04 Rev04150S.dgn