F.A.I. RTE.	SECTION	COUNTY	TOTAL SHEETS	SHEET NO.
94	*	COOK	907	335A
STA. 1200+00.00		TO STA. 1365+00		
FED. ROAD DIST. NO.	ILLINOIS	FED. AID PROJECT		

* (1516.1, 1717 & 1818) R-9

62695

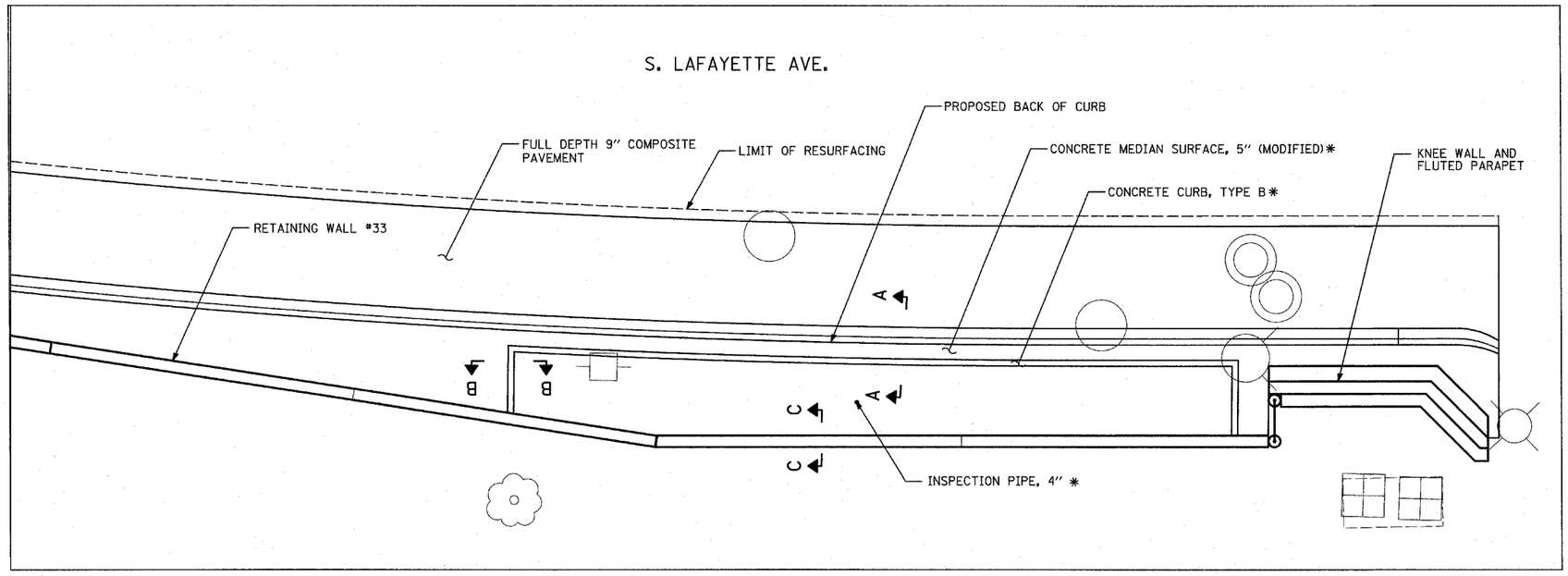

CORNER GARDEN ALONG LAFAYETTE AVENUE AT 95th STREET/CTA

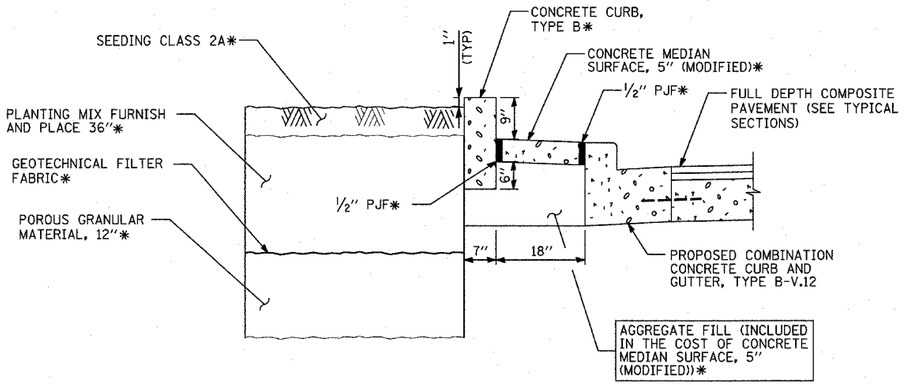

SECTION A-A

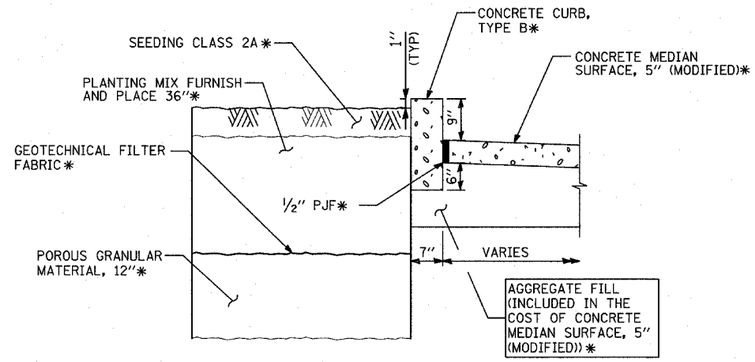

SECTION B-B

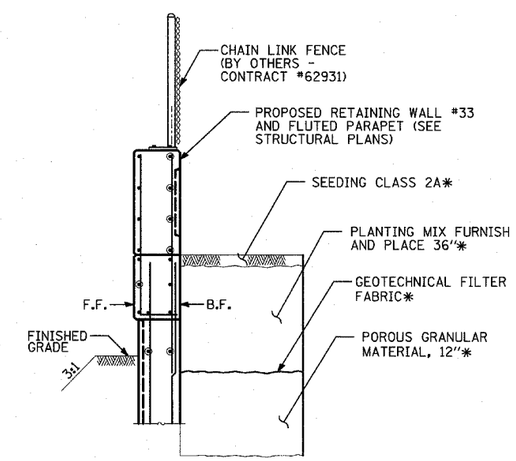

SECTION C-C

NOTES:

DETAIL FOR RETAINING WALL AND FLUTED PARAPET, CAN BE FOUND IN THE STRUCTURAL PLANS - WALL 33.

* - ITEMS PROVIDED BY OTHERS - CONTRACT #62933

REVISIONS	
NAME	DATE
REVISED	05/06/05

ILLINOIS DEPARTMENT OF TRANSPORTATION

F.A.I. 94 (DAN RYAN EXPRESSWAY)

PLANTING BED DETAIL
LAFAYETTE AVENUE AND
SOUTH OF 95th STREET

SCALE: NOT TO SCALE — DRAWN BY: JDF

DATE: MARCH 25, 2005 — CHECKED BY: TGB

TY·LIN INTERNATIONAL

05/05/2005 04:41:42 PM