F.A.I. RTE.	SECTION	COUNTY	TOTAL SHEETS	SHEET NO.
94	*	COOK	907	333
STA. 1200+00.00	TO STA. 1365+00			
FED. ROAD DIST. NO.	ILLINOIS	FED. AID PROJECT		

* (1516.1, 1717 & 1818) R-9

62695

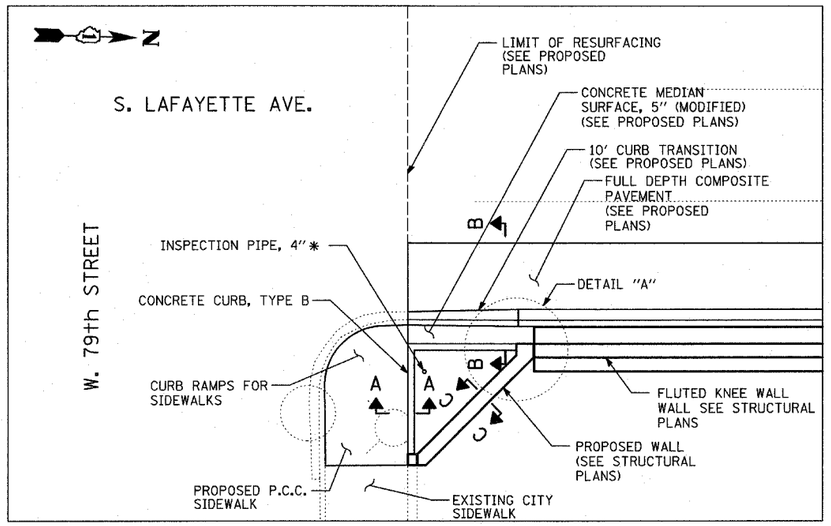

CORNER GARDEN ALONG
LAFAYETTE AVENUE AT 79th STREET

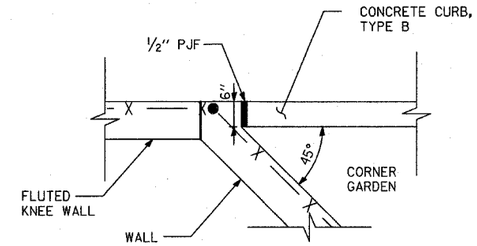

DETAIL A

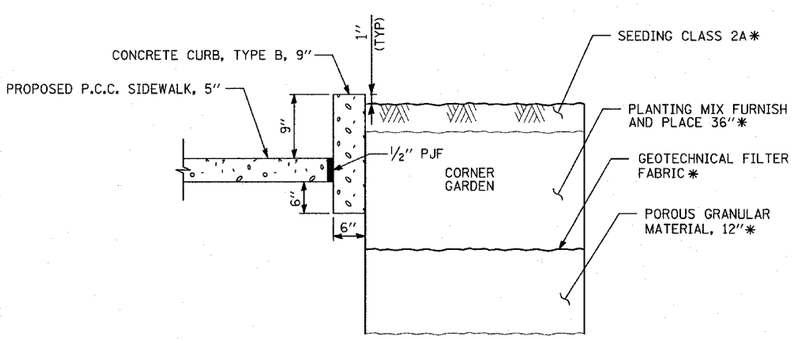

SECTION A-A

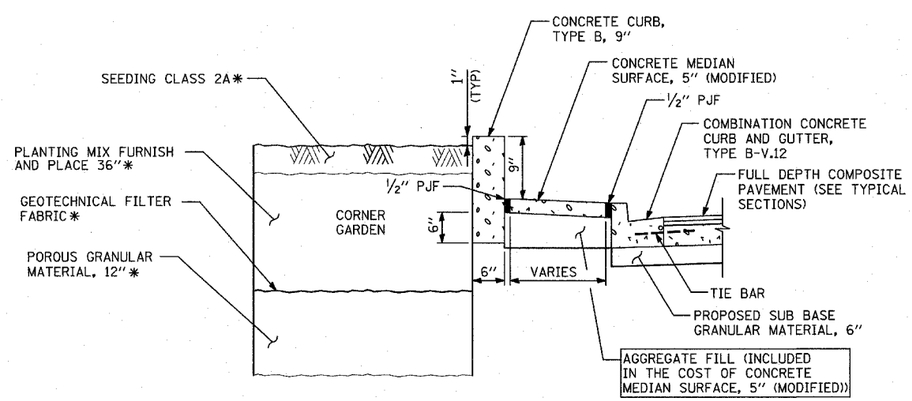

SECTION B-B

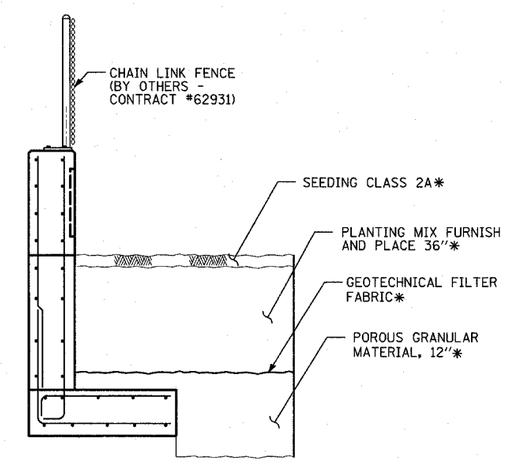

SECTION C-C

NOTES:

DETAIL FOR RETAINING WALL, FLUTED KNEE WALL, CORNER GARDEN, AND GATE CAN BE FOUND IN THE STRUCTURAL PLANS - WALL 72.

* - ITEMS PROVIDED BY OTHERS - CONTRACT *62933

REVISIONS	
NAME	DATE
REVISED	05/06/05
REVISED	04/15/05

ILLINOIS DEPARTMENT OF TRANSPORTATION

F.A.I. 94 (DAN RYAN EXPRESSWAY)

CORNER GARDEN DETAIL
LAFAYETTE AVENUE AND 79th STREET

SCALE: NOT TO SCALE | DRAWN BY: JPA
DATE: MARCH 25, 2005 | CHECKED BY: MPG

TY·LIN INTERNATIONAL