F.A.I. RTE.	SECTION	COUNTY	TOTAL SHEETS	SHEET NO.
94	*	COOK	907	256
STA.		TO STA.		
FED. ROAD DIST. NO.	ILLINOIS	FED. AID PROJECT		

* (1516.1, 1717 & 1818) R-9

62695

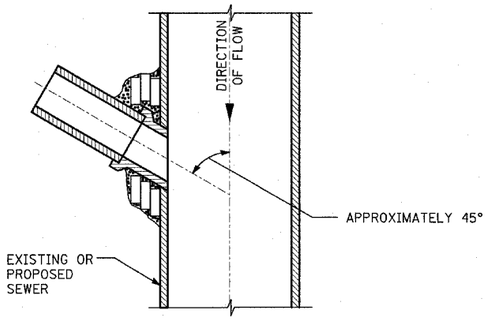

PLAN VIEW
DETAIL 1

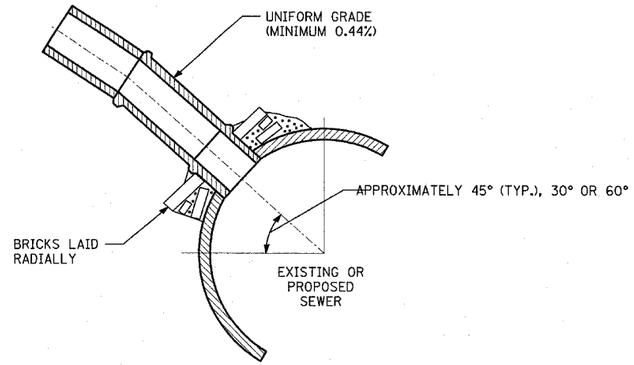

SECTION VIEW
DETAIL 2

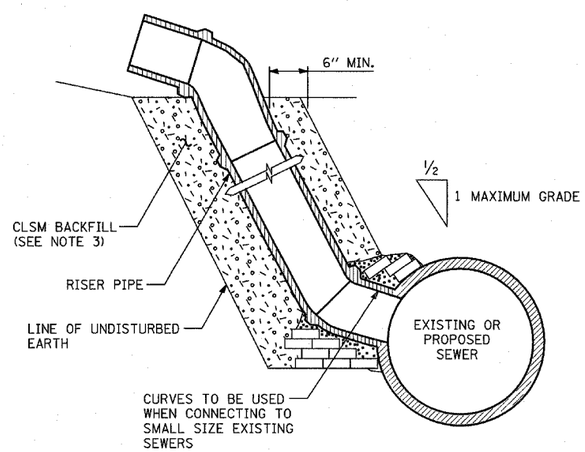

SECTION VIEW
DETAIL 3

DETAILS OF PROPOSED STORM SEWER CONNECTIONS
TO EXISTING/PROPOSED SEWERS

NOTES:

DESCRIPTION:

ALL CATCH BASIN CONNECTIONS SHALL BE 12 INCH STORM SEWER PIPE, UNLESS SHOWN OR SPECIFIED OTHERWISE ON PLAN SHEETS.

CONSTRUCTION METHODS:

1. CONNECTION TO PROPOSED STORM SEWER: WHERE A STORM SEWER CONNECTION IS TO BE MADE TO A PROPOSED STORM SEWER, A "Y" BRANCH SECTION OR A SECTION WITH AN OPENING MADE IN THE PIPE AT THE TIME IT IS MANUFACTURED OF THE PROPER DIAMETER SHALL BE INSTALLED IN THE SEWER AT THE JUNCTION PROVIDING THE TYPE OF PIPE USED IS MANUFACTURED WITH "Y" BRANCHES OR WITH OPENING MADE IN THE PIPE.

   THE JUNCTION OF THE PROPOSED STORM SEWER CONNECTION WITH THE PROPOSED STORM SEWER SHALL BE CONSTRUCTED AS FOLLOWS:

   a. SIMILAR TO DETAIL 1 AND DETAIL 2 TO THE LEFT EXCEPT NO BRICK WILL BE REQUIRED IF SECTIONS WITH "Y" BRANCHES OR SECTIONS WITH OPENINGS MADE IN THE PIPE ARE USED.

   b. SAME AS DETAIL 3 TO THE LEFT.

2. CONNECTION TO EXISTING SEWER: WHERE A STORM SEWER CONNECTION IS TO BE MADE TO AN EXISTING SEWER, A CIRCULAR OPENING SHALL BE MADE IN THE EXISTING SEWER OF THE SAME SIZE AS THE INTERNAL DIAMETER OF THE PROPOSED STORM SEWER CONNECTION.

   IF THE EXISTING SEWER PIPE IS DAMAGED BY THE CONTRACTOR IN MAKING THIS CIRCULAR OPENING, THE CONTRACTOR SHALL REPLACE THIS SECTION OF PIPE WITH A PIPE EQUAL TO AND SIMILAR IN ALL RESPECTS TO THE PIPE IN THE EXISTING SEWER. THE CONTRACTOR SHALL DO THIS WORK IN A CAREFUL WORKMANLIKE MANNER WITHOUT EXTRA COMPENSATION.

   THE JOINT BETWEEN THE EXISTING SEWER AND THE PROPOSED SEWER SHALL BE COMPLETELY SEALED WITH BRICK AS SHOWN ABOVE. BRICK GRADE SW, OR CONCRETE BUILDING BRICK GRADE A, SHALL BE LAID IN MORTAR THE SAME AS SPECIFIED FOR BRICK MASONRY UNDER ARTICLE 602.05 OF THE STANDARD SPECIFICATIONS.

3. ALL CLSM REQUIRED SHALL NOT BE PAID FOR SEPERATELY BUT SHALL BE INCLUDED IN SEWER PAY ITEM.

BASIS OF PAYMENT.

ALL FITTINGS SUCH AS ELBOWS AND CURVES SHALL BE PAID FOR AT THE CONTRACT UNIT PRICE PER LINEAR FOOT FOR STORM SEWER MEASURED IN PLACE.

THE COST OF MAKING ALL JUNCTIONS WITH EXISTING OR PROPOSED SEWERS, MANHOLES OR CATCH BASINS SHALL BE INCLUDED IN THE CONTRACT UNIT PRICE PER LINEAR FOOT FOR STORM SEWER.

TY·LIN INTERNATIONAL

REVISIONS	
NAME	DATE
REVISED	04/15/05

ILLINOIS DEPARTMENT OF TRANSPORTATION

F.A.I. 94 (DAN RYAN EXPRESSWAY)

DETAIL OF STORM SEWER CONNECTIONS TO SEWER

SCALE: NONE DRAWN BY: BK

DATE: MARCH 25, 2005 CHECKED BY: DA