F.A.I. RTE.	SECTION	COUNTY	TOTAL SHEETS	SHEET NO.
94	•	COOK	860	716
STA. 2200+00.00	TO STA. 2362+00.00			
FED. ROAD DIST. NO.	ILLINOIS	FED. AID PROJECT		

• (1516.1, 1717 & 1818) R-8

62694

STATE OF ILLINOIS
DEPARTMENT OF TRANSPORTATION

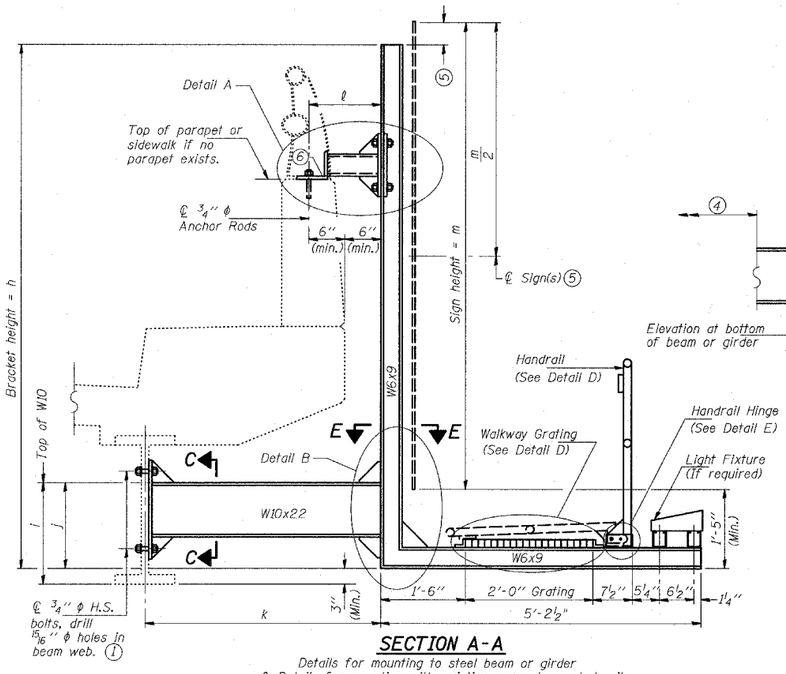

SECTION A-A

Details for mounting to steel beam or girder
& Details for mounting with existing parapet mounted rail

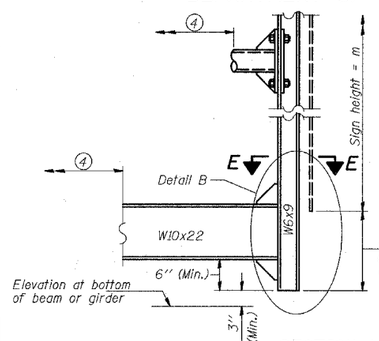

SECTION A-A

Alternate with no lights or walkways

4 For attachment details of 3 1/2" pipe and W10x22, see other sections as applicable.

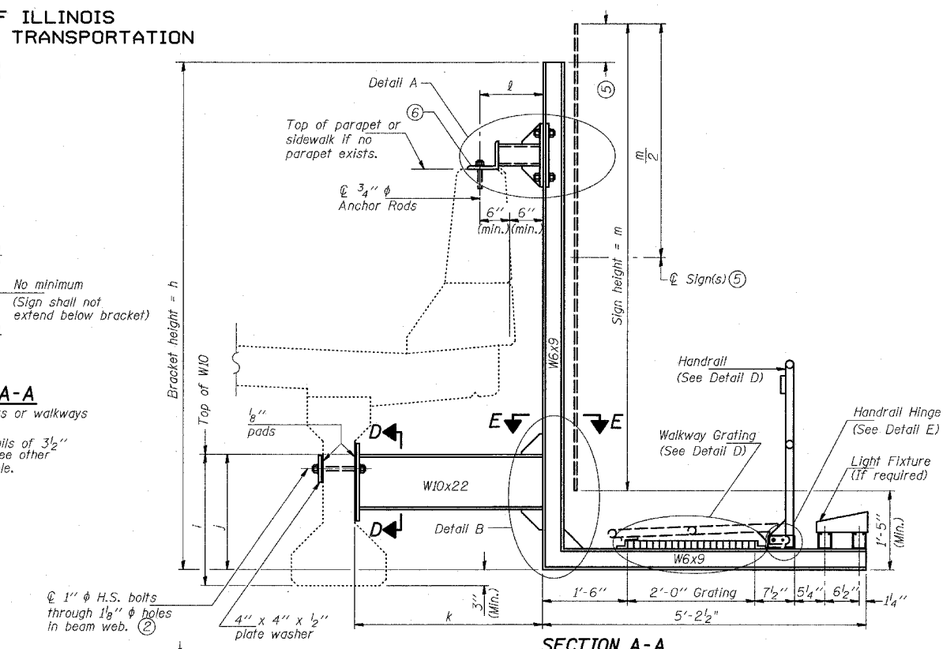

SECTION A-A

Details for mounting to PPC I Beam or Bulb "T"
& Details for mounting to parapet w/o rail

Structure Number	Station	h	i	j	k max. (10'-0" max.)	ℓ max. (8'-0" max.)	m
1B016I094R059.8	2365+00	13.42'	1.93'	1.50'	3.50'	1.09'	12.5'
1B016I094R060.8	2312+37	11.42'	1.81'	1.39'	3.50'	1.05'	10.5'

For Details A & B, Sections C-C, D-D and E-E, see Base Sheet BM-3.
For Details D & E, see Base Sheet BM-4.

1 Holes in new steel members may be drilled in the fabrication shop or in the field. Field drill existing members.

2 For new PPC I beams, holes shall be formed during casting. For existing PPC I beams, prestressing strand locations shall be determined and spaced to miss strands by 6" min. Minimize spalling during field drilling of existing beams.

3 For new construction, form holes. For existing RC beams, locate primary reinforcement and space holes to miss by 6" min. Minimize spalling and concrete fracturing/damage during field drilling of existing concrete. Spalls over 1/4" deep or beyond the coverage of the 4x4 plate washer shall be repaired with epoxy mortar before installing washer.

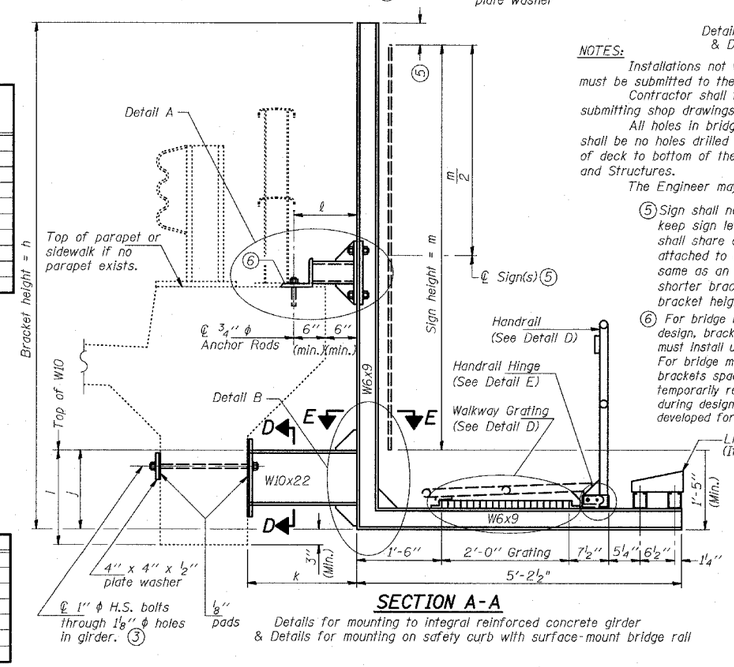

SECTION A-A

Details for mounting to integral reinforced concrete girder
& Details for mounting on safety curb with surface-mount bridge rail

NOTES:

Installations not within dimensional limits shown require special analysis for all components and must be submitted to the Bureau of Bridges and Structures for approval.

Contractor shall field check all pertinent existing bridge dimensions shown on plans before submitting shop drawings.

All holes in bridge beams or girders should be located in the middle half of the member. There shall be no holes drilled in the lower quarter of the member's depth. (For R.C. girder, depth = bottom of deck to bottom of the girder.) Proposed exceptions must be approved by the Bureau of Bridges and Structures.

The Engineer may adjust dimension "i" to meet the above condition and to keep the sign level.

5 Sign shall not extend more than 6" above top of bracket, and this dimension may vary to keep sign level if bridge is on grade or vertical curve. Multiple signs of various heights shall share a common horizontal centerline and use equal bracket heights. If no sign is attached to a W6x9 vertical (bracket only supporting walkway), dimension h shall be the same as an adjacent bracket with a sign attached, unless Engineer specifically directs shorter brackets due to locational restraints on future uses. (See Detail A for minimum bracket height.)

6 For bridge mounted sign structures installed on new bridges with railing, during design, bracket spacing must be coordinated with railing post spacing and the Contractor must install upper brackets prior to railing installation.
For bridge mounted sign structures installed on existing bridges with railing, during design, brackets spacing must be coordinated with railing post spacing and the Contractor must temporarily remove sections of railing to facilitate upper bracket installation. If it is determined during design that existing railings can't be removed, alternate upper connection details must be developed for the contract plans and approved by the Bureau of Bridges and Structures.

FOR BRIDGE-MOUNTED SIGN STRUCTURE AT STA. 2365+00, USE W6x12 INSTEAD OF W6x9.

DESIGNED -	
CHECKED -	
DRAWN -	
CHECKED -	

- 20

EXAMINED
ENGINEER OF STRUCTURAL SERVICES

PASSED
ENGINEER OF BRIDGES AND STRUCTURES

BM-2 11/1/2002

NUMBER	REVISION	DATE

TY·LIN INTERNATIONAL

REVISIONS NAME	DATE
REVISED	05/06/05

ILLINOIS DEPARTMENT OF TRANSPORTATION

F.A.I. 94 (DAN RYAN EXPRESSWAY)

BRIDGE MOUNT SIGN STRUCTURES
WALKWAY AND CONNECTION DETAILS

SCALE: AS NOTED DRAWN BY: AMB
DATE: MARCH 18, 2005 CHECKED BY: TB

04/30/2006 02:16:51 PM