F.A.I. RTE.	SECTION	COUNTY	TOTAL SHEETS	SHEET NO.
94	*	COOK	860	494
STA. 2200+00.00		TO STA. 2362+00.00		
FED. ROAD DIST. NO.	ILLINOIS	FED. AID PROJECT		

* (1516.1, 1717 & 1818) R-8

62694

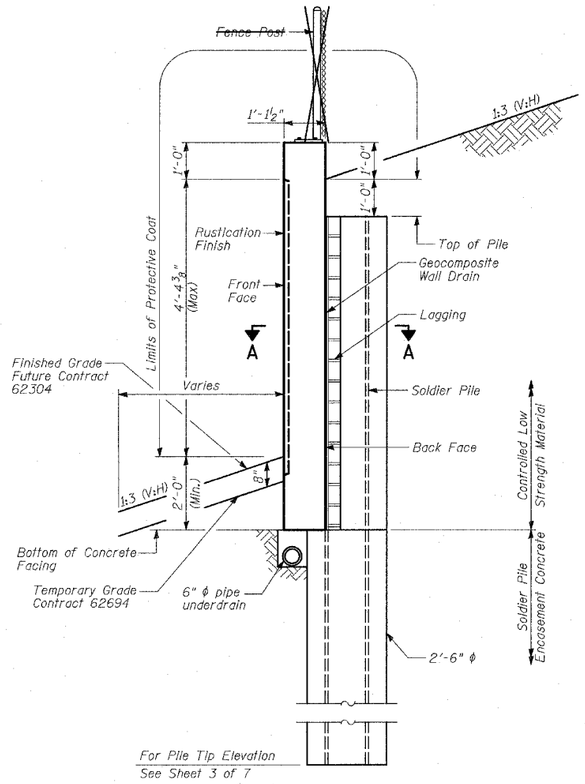

TYPICAL CROSS-SECTION

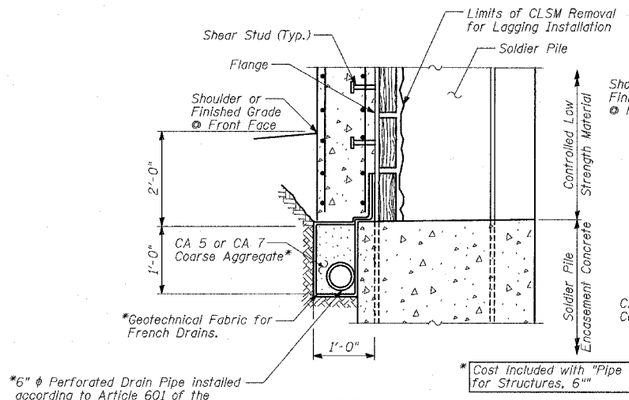

PIPE UNDERDRAIN DETAIL AT SOLDIER PILE

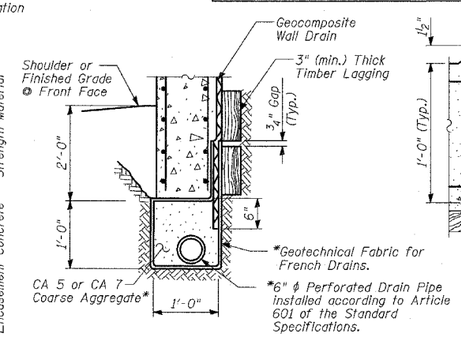

PIPE UNDERDRAIN DETAIL BETWEEN SOLDIER PILES

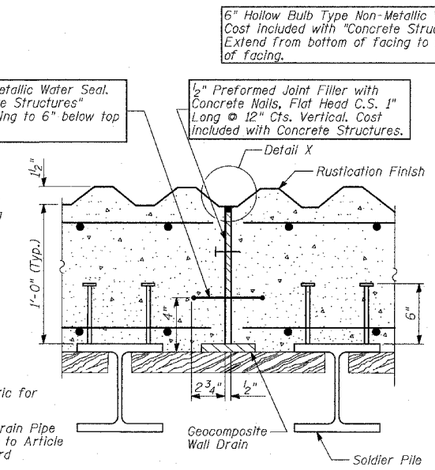

EXPANSION JOINT DETAILS
(Joint in Valley)

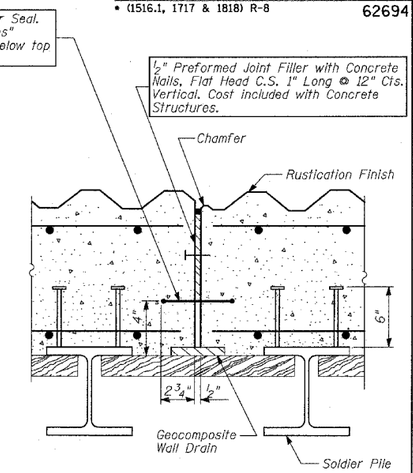

EXPANSION JOINT DETAILS
(Joint on Diagonal)

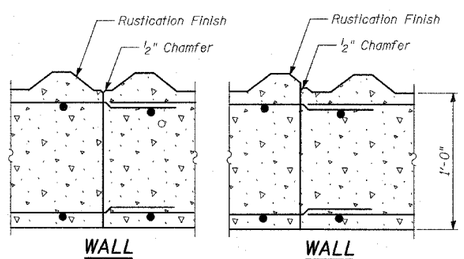

WALL
(Joint in Valley)

WALL
(Joint on Diagonal)

CONSTRUCTION JOINT DETAILS

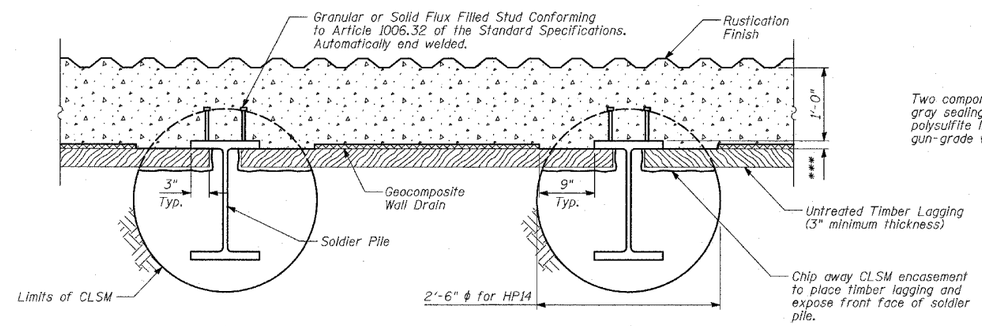

SECTION A-A

*** Cost of additional concrete between face of untreated timber lagging and face of pile included with "Concrete Structures".

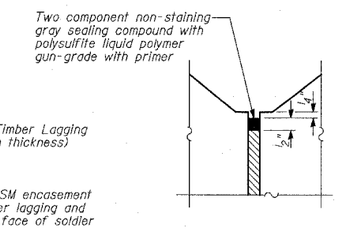

DETAIL X

NOTES:

1. The geocomposite wall drain shall be constructed according to Section 591 of the Standard Specifications.
2. The Contractor is responsible for the design and performance of the lagging using no less than 3" nominal rough-sawn thickness and the minimum tabulated unit stress in bending (F_b), used in the design of timber lagging shall be 1000 psi.
3. Stud shear connectors shall be ¾" ϕ x 6" granular or solid flux filled headed studs, automatically end welded to the front flange of the soldier piles.

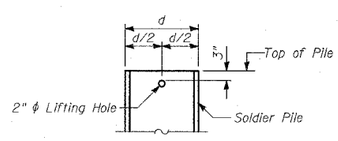

LIFTING HOLE DETAIL

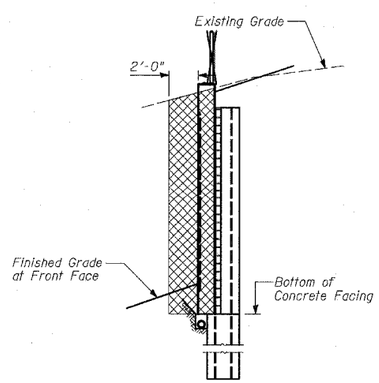

STRUCTURE EXCEPTION
(For Proposed Wall)

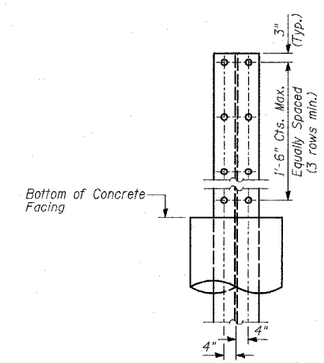

SHEAR STUD CONNECTOR DETAIL

BILL OF MATERIAL

ITEM	UNIT	TOTAL
Structure Excavation	CU YD	54
Stud Shear Connectors	EACH	116
Untreated Timber Lagging	SQ FT	395
Geocomposite Wall Drain	SQ YD	49
Pipe Underdrains for Structures, 6"	FOOT	90

SHEET 4 OF 7

REVISIONS	
NAME	DATE
REVISED	04/15/05

ILLINOIS DEPARTMENT OF TRANSPORTATION

F.A.I. 94 (DAN RYAN EXPRESSWAY)
RETAINING WALL ALONG STATE ST.
AT BELT RY.
WALL 4
WALL CROSS SECTIONS & DETAILS

S.N. 016-W953 — DESIGNED BY: MI, DJR
SCALE: N.T.S. — DRAWN BY: DJR
DATE: MARCH 18, 2005 — CHECKED BY: TD, MI

TY·LIN INTERNATIONAL

$TIME$
$DATE$