F.A.I. RTE.	SECTION	COUNTY	TOTAL SHEETS	SHEET NO.
94	•	COOK	860	242
STA.		TO STA.		
FED. ROAD DIST. NO.	ILLINOIS	FED. AID PROJECT		

• (1516.1, 1717 & 1818) R-8

62694

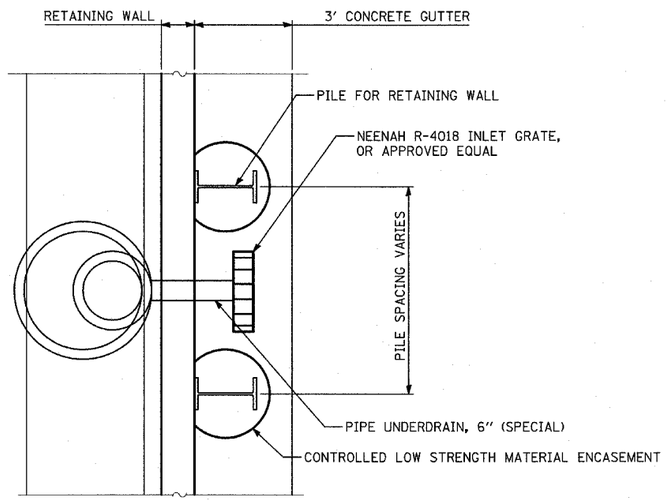

PLAN, CONCRETE GUTTER OUTLET

(NTS)

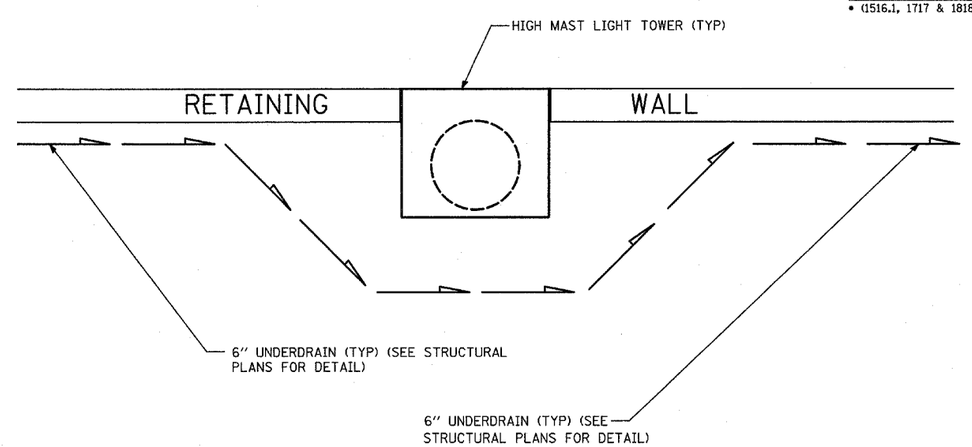

PIPE UNDERDRAIN AROUND HIGH MAST LIGHT TOWER DETAILS

(NTS)

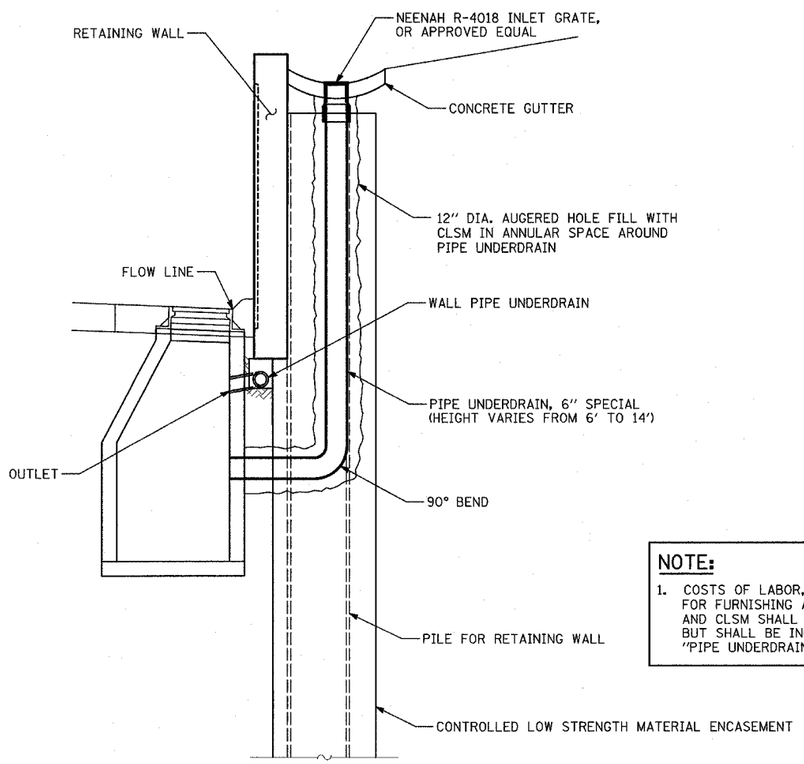

ELEVATION, CONCRETE GUTTER OUTLET

(NTS)

NOTE:

1. COSTS OF LABOR, MATERIAL AND EQUIPMENT FOR FURNISHING AND INSTALLING THE INLET GRATE AND CLSM SHALL NOT BE PAID FOR SEPARATELY, BUT SHALL BE INCLUDED IN THE PER FOOT COST OF "PIPE UNDERDRAIN, 6" SPECIAL".

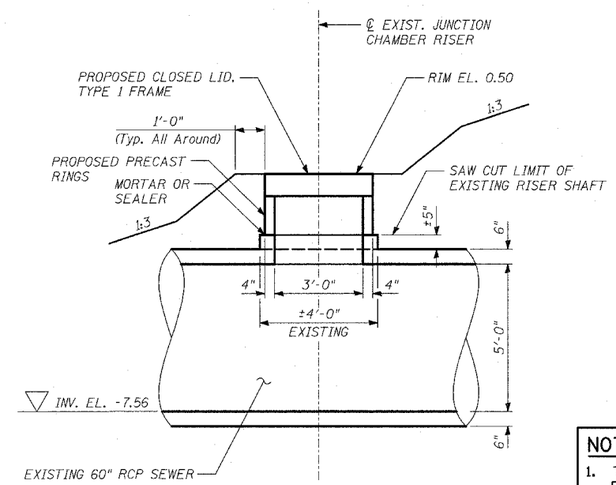

RISER SHAFT RECONSTRUCTION DETAIL

STATION 2266+11.46, OFFSET 88.24 RT

NOTE:

1. TO BE PAID FOR AS "MANHOLES TO BE RECONSTRUCTED"

TY·LIN INTERNATIONAL

REVISIONS	
NAME	DATE
REVISED	04/15/05

ILLINOIS DEPARTMENT OF TRANSPORTATION

F.A.I. 94 (DAN RYAN EXPRESSWAY)

DRAINAGE DETAILS
SHEET 3 OF 3

SCALE: N.T.S. DRAWN BY: DM

DATE: MARCH 18, 2005 CHECKED BY: DA