F.A.P. RTE.	SECTION	COUNTY	TOTAL SHEETS	SHEET NO.
337	20 WRS-6	LAKE	318	200
STA.		TO STA.		
FED. ROAD DIST. NO.		ILLINOIS	FED. AID PROJECT	

CONTRACT NO. 62030

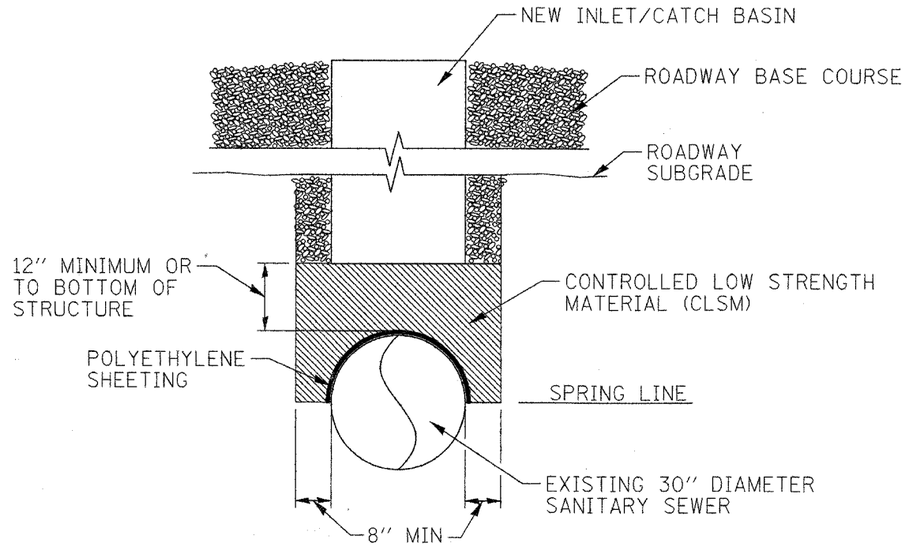

TRANSVERSE SECTION
(NOT TO SCALE)

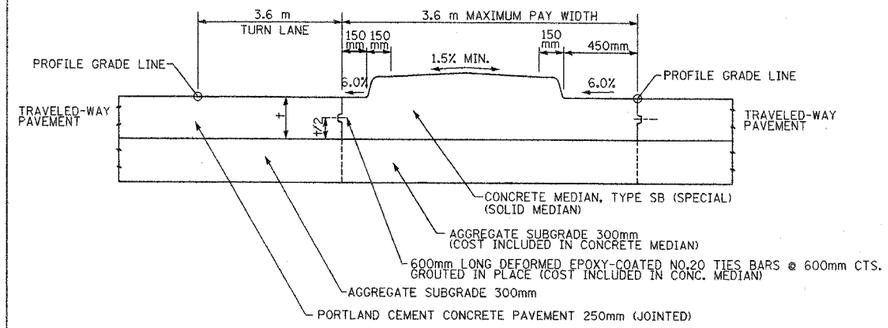

CONCRETE MEDIAN, TYPE SB (SPECIAL) DETAIL

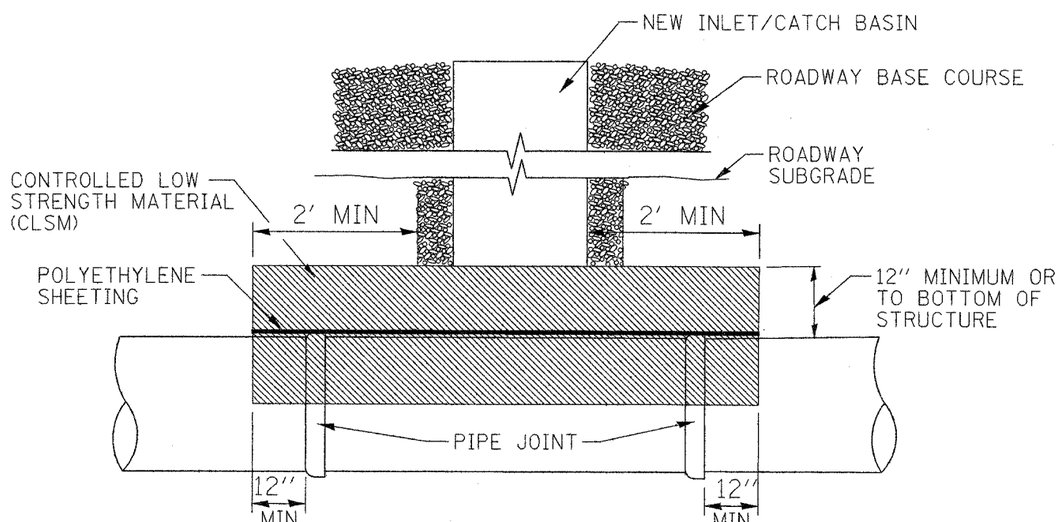

LONGITUDINAL SECTION
(NOT TO SCALE)

SANITARY SEWER PIPE PROTECTION

REVISIONS	
NAME	DATE

ILLINOIS DEPARTMENT OF TRANSPORTATION
ILLINOIS ROUTE 22

CONSTRUCTION DETAILS

SCALE NTS — DRAWN BY SMP
DATE 03/11/05 — CHECKED BY BDH