CONTRACT NO. 62030

F.A. RTE.	SECTION	COUNTY	TOTAL SHEETS	SHEET NO.
337	20 WR-6	LAKE	318	104
STA.		TO STA.		
FED. ROAD DIST. NO.		ILLINOIS	FED. AID PROJECT	

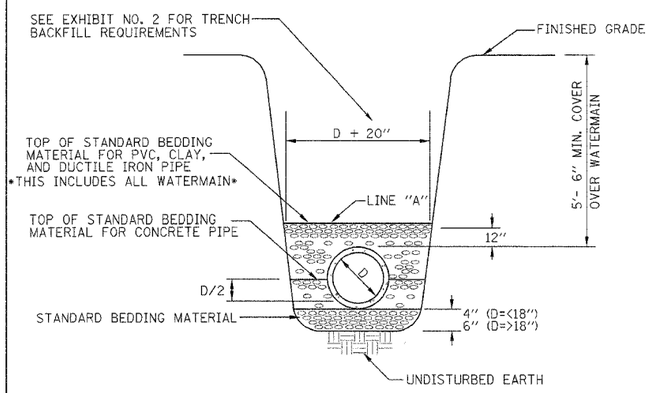

NOTES:

1. STANDARD BEDDING MATERIAL FOR NON-PLASTIC PIPE INCLUDING ALL WATERMAIN SHALL BE WELL COMPACTED, WASHED, 1/4" TO 3/4" CRUSHED STONE, ASTM 448, SIZE CA-7.
2. STANDARD BEDDING MATERIAL FOR PLASTIC PIPE SHALL CONFORM TO ASTM D2321, CLASS II NON-ANGULAR AGGREGATE EXCEPT THE MAXIMUM SIZE SHALL BE 1/2".
3. SELECT, WELL COMPACTED EXCAVATED MATERIAL SHALL BE PLACED TO LINE "A" IF STANDARD BEDDING MATERIAL IS NOT REQUIRED TO LINE "A."
4. VOIDS LEFT BY SHEETING SHALL BE FILLED WITH STANDARD BEDDING MATERIAL AS THE SHEETING IS REMOVED.

TYPICAL TRENCH AND STANDARD BEDDING

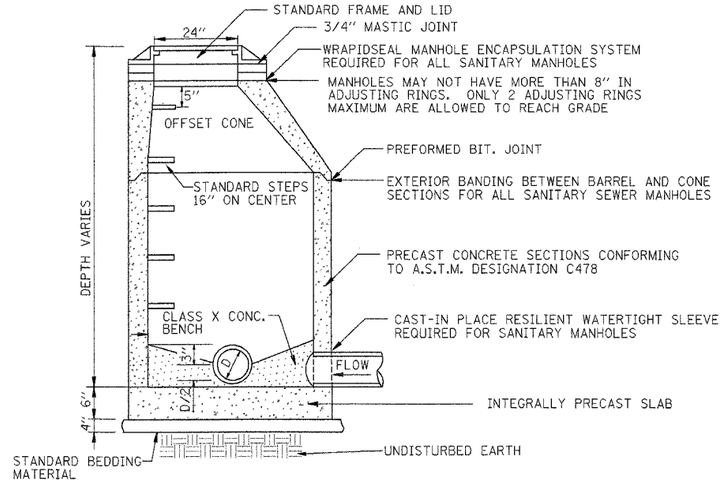

NOTES:

1. FOR SEWERS 24 INCHES OR LESS IN DIAMETER, USE 48 INCH MANHOLES; FOR SEWERS MORE THAN 24" INCHES IN DIAMETER, USE 60" INCH MANHOLES.
2. FOR VITRIFIED CLAY PIPE SEWERS, LOCATE A BELL OR SPIGOT AS APPROPRIATE JUST OUTSIDE THE MANHOLE WALL TO PROVIDE A PIVOT POINT FOR ANY DIFFERENT MOVEMENT.
3. WRAPIDSEAL MANHOLE ENCAPSULATION SYSTEM REQUIRED FOR ALL SANITARY SEWER MANHOLES. (SEE EXHIBIT NO. 4)
4. WATER TIGHT SEALENT REQUIRED FOR ALL SANITARY SEWER MANHOLES.

SANITARY MANHOLE

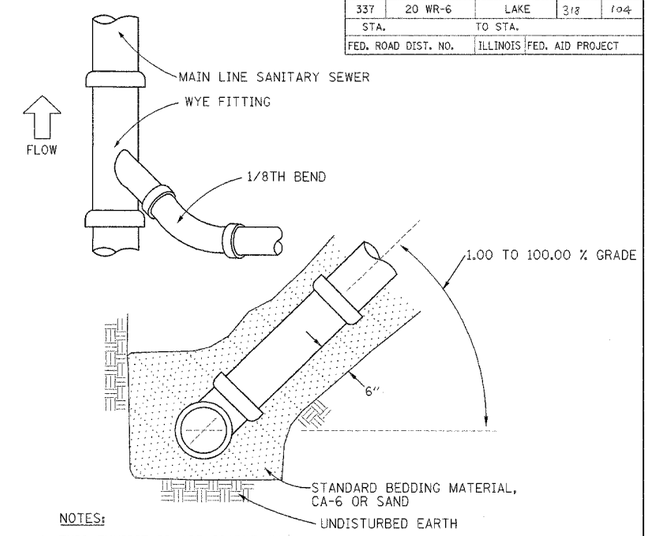

NOTES:

1. THIS EXHIBIT IS APPLICABLE TO FOUR (4) OR (6) INCH SANITARY SERVICE CONNECTIONS ONLY. LARGER DIAMETER SANITARY SEWER CONNECTIONS SHALL BE MADE AT MANHOLES ONLY.
2. THE BEDDING UNDER THE WYE FITTING AND STUB SHALL BE CAREFULLY COMPACTED TO PREVENT THE WYE FITTING FROM ROTATING.
3. THE SANITARY SERVICE CONNECTION PIPE SHALL BE LAID IN A STRAIGHT LINE AND AT A UNIFORM GRADIENT FROM THE TOP OF THE RISE FROM THE MAIN LINE TO THREE (3) FEET BEYOND THE RIGHT-OF-WAY LINE.
4. SECURELY PLUG THE END OF THE SERVICE CONNECTION.

SANITARY SERVICE CONNECTION

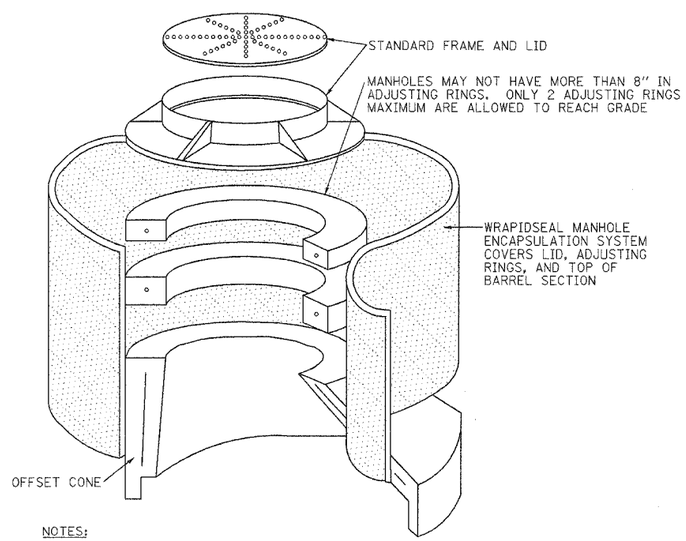

NOTES:

1. WRAPIDSEAL SHALL BE INSTALLED ON ALL SANITARY SEWER MANHOLES.
2. WRAPIDSEAL MANHOLE ENCAPSULATION SYSTEMS ARE REQUIRED, ANY OTHER PRODUCTS OR OTHER DESIGN SOLUTIONS SHALL REQUIRE THE APPROVAL OF THE VILLAGE ENGINEER OR DIRECTOR OF PUBLIC WORKS.
3. WRAPIDSEAL SHALL BE INSTALLED IN ACCORDANCE WITH MANUFACTURER'S GUIDELINES AND INSTRUCTIONS.

WRAPIDSEAL MANHOLE ENCAPSULATION SYSTEM

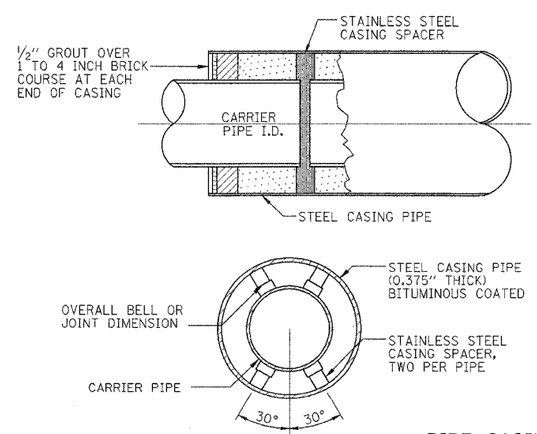

NOTES:

1. THE WATER MAIN SHALL BE 'CENTER SPACED' AND RESTRAINED ON TOP AND BOTTOM UTILIZING TWO CASING SPACERS EQUALLY SPACED PER LENGTH OF PIPE.
2. THE SANITARY SEWER MAIN SHALL BE CLASS 52 DUCTILE IRON PIPE, 'CENTER SPACED' AND RESTAINED ON TOP AND BOTTOM UTILIZING TWO CASING SPACERS EQUALLY SPACED PER LENGTH OF PIPE.
3. CASING SPACERS ARE TO BE POWERSEAL MODEL 48-10 STAINLESS STEEL OR APPROVED EQUAL.
4. CASING IS TO BE SEALED AT BOTH ENDS WITH A MASONARY CAP AND MADE WATER-TIGHT.
5. WATER MAIN JOINTS WITHIN THE CASING SHALL BE RESTRAINED UTILIZING U.S. PIPE FIELD LOCK GASKETS OR APPROVED EQUAL.

PIPE CASING DETAIL

1" = 25mm, 1 Foot = 300mm

GRAEF, ANHALT, SCHLOEMER & ASSOCIATES, INC.
ENGINEERS & SCIENTISTS
8501 W. Higgins Road; Suite 280
Chicago, Illinois 60631
(773) 399-0112

REVISIONS	
NAME	DATE

ILLINOIS DEPARTMENT OF TRANSPORTATION
ILLINOIS ROUTE 22
E. OF BUESCHING RD TO QUENTIN RD
DETAILS

SANITARY SEWER AND WATER MAIN RELOCATION

DRAWN BY: JJH
DATE: 03-11-05
CHECKED BY: WS

FINAL SURVEY	DATE	BY
SURVEYED		
PLOTTED		
NOTE BOOK	TEMPLATE	
	AREAS	
NO.	AREAS CHECKED	

ORIGINAL SURVEY	DATE	BY
SURVEYED		
PLOTTED		
NOTE BOOK	TEMPLATE	
	AREAS	
NO.	AREAS CHECKED	