F.A.P. RTE.	SECTION	COUNTY	TOTAL SHEETS	SHEET NO.
337	20K-5	LAKE	562	410
STA.		TO STA.		
FED. ROAD DIST. NO.		ILLINOIS	FED. AID PROJECT	

D-91-552-99 CONTRACT #60881

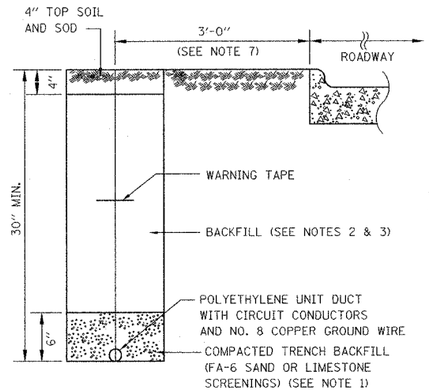

TYPICAL UNIT DUCT TRENCH DETAIL

(ALONG ROADWAY)

NOTES:

1. UNIT DUCT INSTALLED IN TRENCHES SHALL BE COVERED WITH A MINIMUM OF 6" OF COMPACTED FA-6 OR LIMESTONE SCREENINGS.
2. IN GRASSY AREAS, THE BACKFILL MAY BE COMPACTED EARTH.
3. TRENCHES WITHIN 2' OF PROPOSED OR EXISTING STREETS, DRIVEWAYS, OR SIDEWALKS SHALL BE BACKFILLED WITH COMPACTED FA-6 SAND OR LIMESTONE SCREENINGS.
4. WHERE 2 OR MORE UNIT DUCTS RUN ADJACENT TO EACH OTHER, THEY SHALL BE PLACED IN A COMMON TRENCH SO AS NOT TO CROSS EACH OTHER.
5. 6" WIDE REINFORCED METALLIC WARNING TAPE, RED WITH BLACK LETTERING TO READ "CAUTION-ELECTRICAL LINE BURIED BELOW". WARNING TAPE TO BE PLACED 1' MINIMUM TO 2' MAXIMUM BELOW FINISHED GRADE.
6. ALL GRASSY AREAS DISTURBED DURING CONSTRUCTION SHALL BE RESTORED WITH 4" OF TOPSOIL AND SOD.
7. EXACT DISTANCE SHALL BE FIELD COORDINATED.

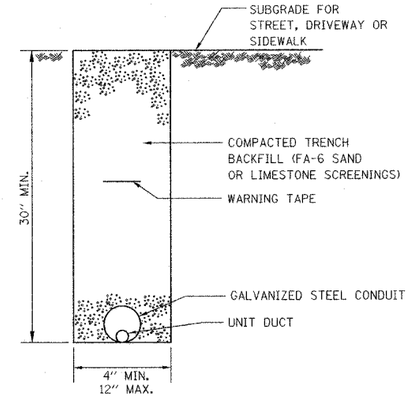

TYPICAL CONDUIT TRENCH DETAIL

(UNDER PAVEMENT)

NOTES:

1. CONDUIT SHALL BE HOT DIP GALVANIZED STEEL. A MINIMUM OF 4" (100mm) IN DIAMETER.
2. CONDUIT SHALL EXTEND A MINIMUM OF 5' BEYOND THE STREET, DRIVEWAY, OR SIDEWALK
3. CONDUIT SHALL HAVE BOTH ENDS CAPPED UNTIL USED.
4. WHEN PLACED INTO SERVICE, CONDUIT SHALL BE PROVIDED WITH AN INSULATED FIBER BUSHING, AND SEALED WITH A WORKABLE SOFT PLASTIC SEALING COMPOUND AT EACH END.
5. 6" WIDE REINFORCED METALLIC WARNING TAPE, RED WITH BLACK LETTERING TO READ "CAUTION-ELECTRICAL LINE BURIED BELOW". WARNING TAPE TO BE PLACED 1' MINIMUM TO 2' MAXIMUM BELOW FINISHED GRADE.
6. ALL GRASSY AREAS DISTURBED DURING CONSTRUCTION SHALL BE RESTORED WITH 4" OF TOPSOIL AND SOD.

NOTES:

1. CAD WELD #8 BARE STRANDED COPPER WIRE TO 19mm ϕ x 3.0m COPPER CLAD GROUND ROD.
2. DRILL AND TAP A METAL FRAME FOR 1/4-20. INSERT 1 INCH X 1/4-20 BOLT FROM THE INSIDE WITH GREASE ON THE THREADS TO ALLOW EASY REMOVAL AFTER CONCRETE IS SET. DRILL A 1/4 INCH HOLE IN THE LID FOR A NUT AND BOLT ATTACHMENT OF #8 JUMPER CABLE.
3. CONNECT #8 COPPER WIRE FROM GROUND ROD TO FRAME AND JUMPER BETWEEN FRAME AND LID.

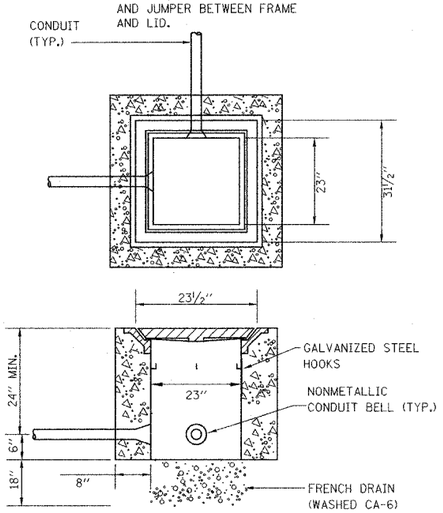

CONCRETE HANDHOLE DETAIL

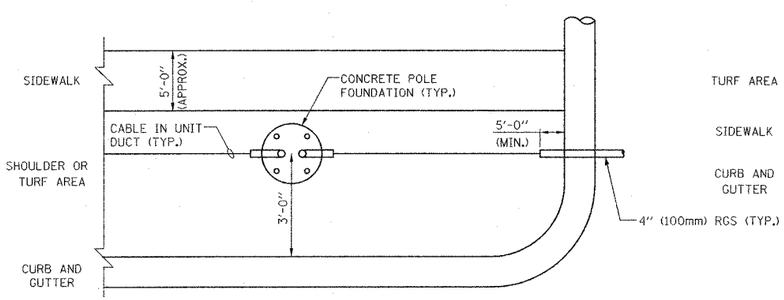

"A"

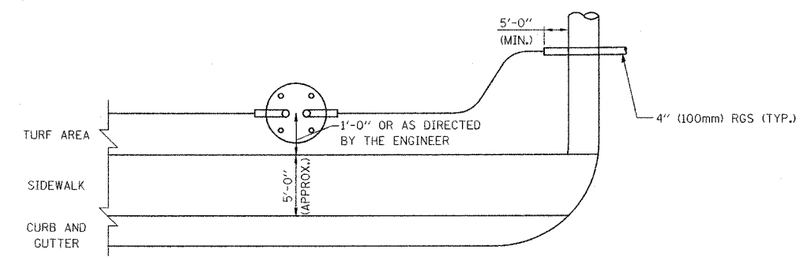

"C"

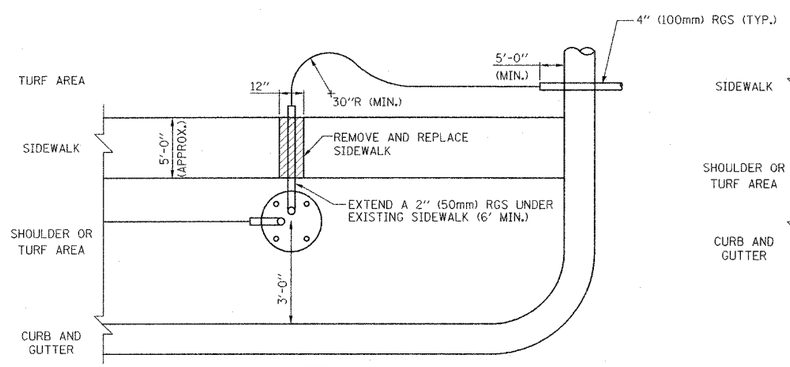

"B"

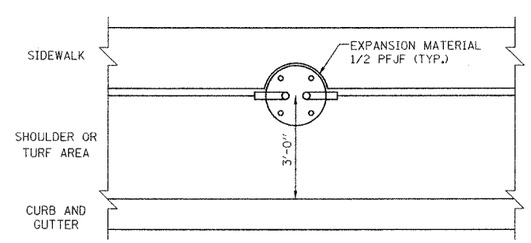

"D"

TYPICAL CONDUIT INSTALLATION DETAILS

(NEAR INTERSECTIONS)

NOTES:

1. UNIT DUCT SHALL BE INSTALLED MIN. 12'-0" FROM PAVEMENT EDGE.
2. CONTRACTOR SHALL MAKE AN EFFORT TO INSTALL RGS CONDUITS (UNDER DRIVEWAYS OR ROADWAY) AT THE SAME SIDE OF THE SIDEWALK AS THE POLE FOUNDATION (DETAIL "A").
3. WHEN ITS NECESSARY TO CROSS THE EXISTING SIDEWALK, CONTRACTOR SHALL INSTALL A 4" (100mm) RGS CONDUIT PERPENDICULAR TO THE SIDEWALK (DETAIL "B").
4. WHEN LOCATION OF A POLE FOUNDATION FALLS COMPLETELY WITHIN THE EXISTING SIDEWALK, CONTRACTOR SHALL CONSTRUCT THE FOUNDATION AT THE SIDE OF SIDEWALK AWAY FROM THE ROAD (DETAIL "C"). WHEN PARTIAL OVERLAP OCCURS, CONTRACTOR SHALL CONSTRUCT THE POLE FOUNDATION AS SHOWN ON DETAIL "D".
5. LOCATIONS SHOWN IN DETAILS ARE APPROXIMATE AND SHALL BE FIELD COORDINATED DURING CONSTRUCTION.

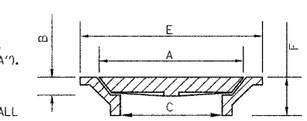

NEENAH R-6662-HH
DIMENSIONS IN INCHES
A: 23 1/2 X 23 1/2
B: 1 3/4
C: 23 X 23
E: 31 1/2 X 31 1/2
F: 4

NOTES:

1. COVER TO BE IMPRINTED WITH "STREET LIGHTING".
2. FRAMES SHALL BE FURNISHED WITH TYPE "G" LIFTING HANDLES AND TYPE "T" HINGES WITH A SAFETY BAR.
3. MANUFACTURER SHALL PROVIDE GROUND LUGS FOR EACH HANDHOLE LID AND FRAME. CONTRACTOR SHALL MAKE CONNECTIONS FROM EACH LUG TO THE GROUND ROD AT EACH HANDHOLE.

HANDHOLE COVER DETAIL

REVISIONS	
NAME	DATE

ILLINOIS DEPARTMENT OF TRANSPORTATION
IL RTE 22 (FAP 337)
IL RTE 83 TO US 45 / IL 21 (MILWAUKEE AVE)

ELECTRICAL DETAILS
(1 OF 3)

SCALE: DRAWN BY: CMW
DATE: 03-22-2004 CHECKED BY: MAR

Burns & McDonnell SINCE 1898

FINAL SURVEY: SURVEYED / PLOTTED / NOTE BOOK / TEMPLATE / AREAS / AREAS CHECKED — NO. — BY — DATE

ORIGINAL SURVEY: SURVEYED / PLOTTED / NOTE BOOK / TEMPLATE / AREAS / AREAS CHECKED — NO. — BY — DATE