STATE OF ILLINOIS
DEPARTMENT OF TRANSPORTATION

FAP	SECTION	COUNTY	TOTAL SHEETS	SHEET NO.
337	20R-5	LAKE	562	230
FED. ROAD DIST. NO. 9		ILLINOIS	FED. AID PROJECT-	

SHEET NO. 3
3 SHEETS

D-91-552-99 Contract No. 60881

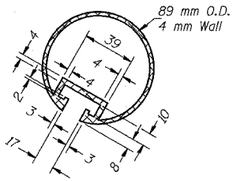

SECTION THRU TOP RAIL

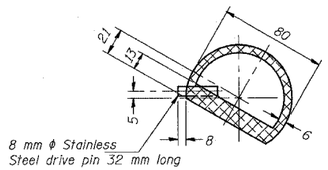

SECTION THRU SPLICE
TOP RAIL

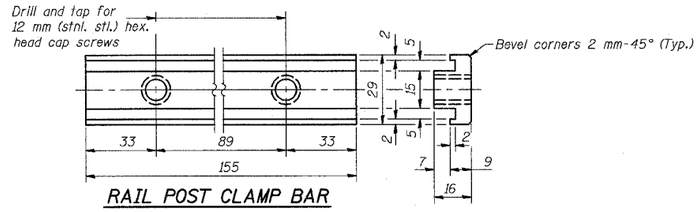

RAIL POST CLAMP BAR
For Top Rail

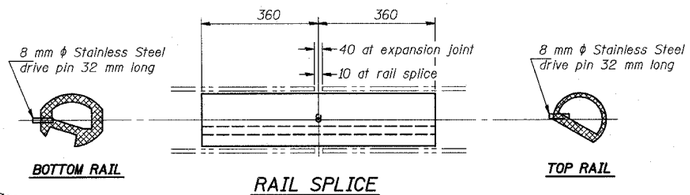

BOTTOM RAIL

RAIL SPLICE

TOP RAIL

Notes: All Posts shall be normal to parapet.
All Aluminum Alloy Extruded Rail shall be supplied in modular lengths of 9 meters, except at the end of bridge or over open joints in bridge deck where the rail shall be attached to a minimum of 2 posts. If the rail is on a horizontal curve of 700 meter radius or less, the modular lengths may be reduced but shall be attached to a minimum of 2 posts.
All joints in rail shall be spliced per detail.
Provide 1-3 mm and 2-1.6 mm Aluminum Shims for 25% of the Posts. Rail elements shall be parallel to Grade-high spots will be ground and low spots shimmed.
Railing shall be according to Section 509 of the Standard Specifications, except as noted, and will be paid for at the contract unit price per meter for ALUMINUM RAILING, TYPE L.
Aluminum alloy rail shall conform to ASTM B 221M alloy 6061-T6 or 6351-T5 with min. yield stress 240 MPa, min. tensile strength 260 MPa, and elongation of 10% in 50 mm.
All dimensions are in millimeters (mm) except as noted.

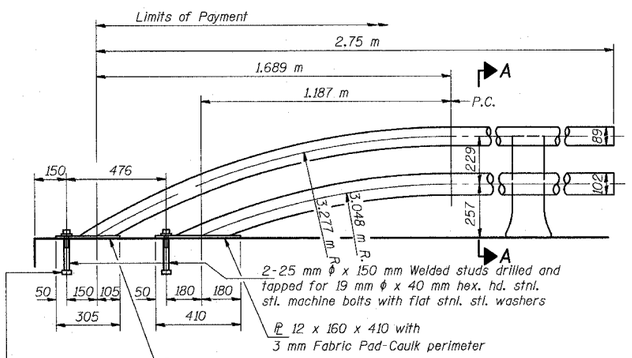

NOTE: The end rail post shall be set back as required for the terminal rail section.

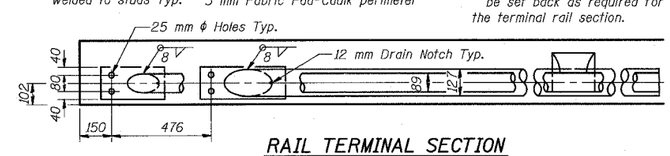

RAIL TERMINAL SECTION

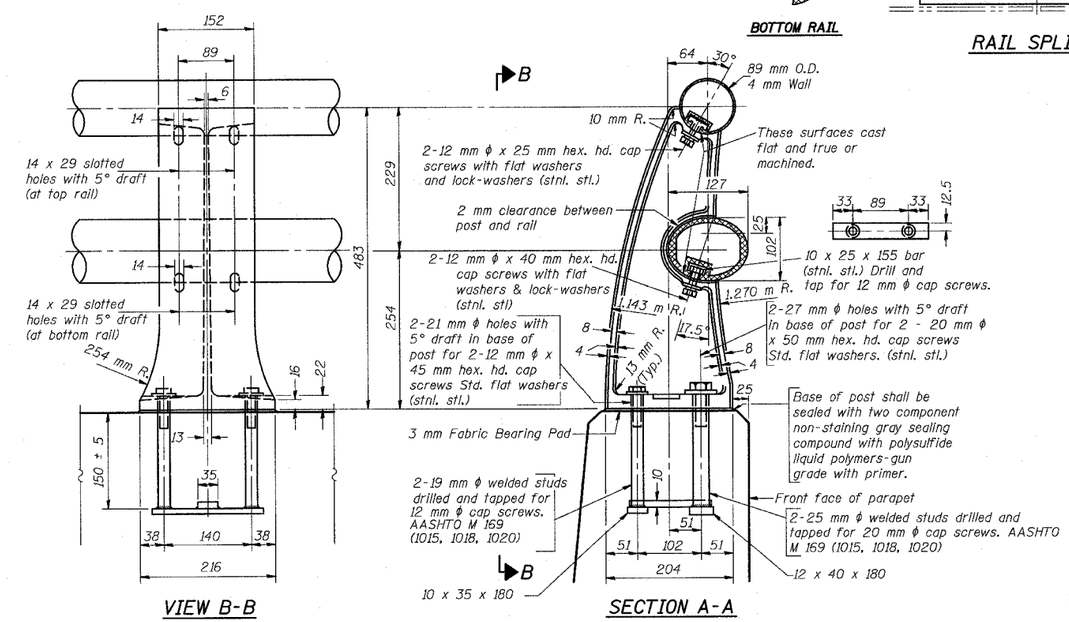

VIEW B-B

SECTION A-A

RAIL POST DETAILS

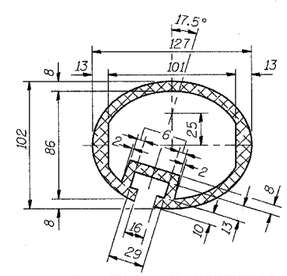

SEC. THRU ELLIPTICAL RAIL SECTION

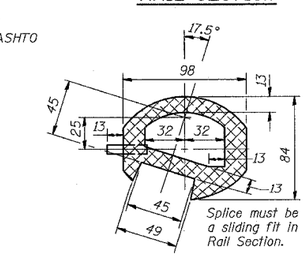

SEC. THRU SPLICE

BILL OF MATERIAL

ITEM	UNIT	QTY
Aluminum Railing, Type L	METER	15

TYLIN INTERNATIONAL

DESIGNED	DJR
CHECKED	MI
DRAWN	DJR
CHECKED	MI
DATE	03-22-2004

R-20 (M) 4-30-97

TYPE L
ALUMINUM RAILING

HEADWALL
STA. 103+782.0 TO STA. 103+767.0
IL ROUTE 22
FAP 337 SECTION 20R-5
IL RTE 83 TO US 45/IL 21
LAKE COUNTY

...\structur\boxes\20hw_type1.dgn 04/12/2004 11:40:16 AM