*REF-
*REF-

F.A. RTE.	SECTION	COUNTY	TOTAL SHEETS	SHEET NO.
	1316RS-1	COOK	22	8
STA.	TO STA.			
FED. ROAD DIST. NO. 1	ILLINOIS	FED. AID PROJECT		

CONTRACT NO. 60754

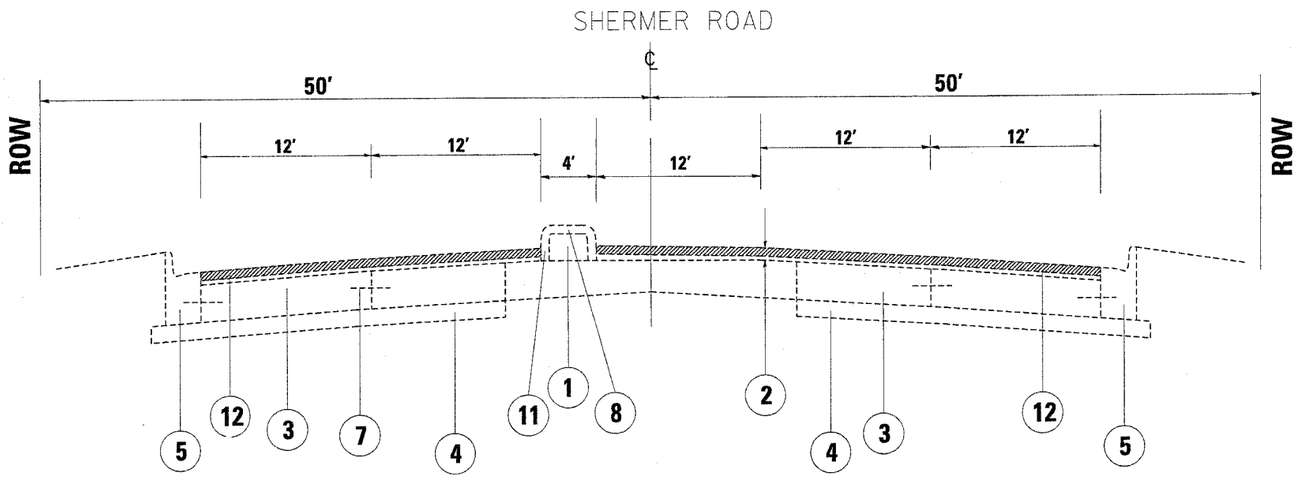

EXISTING TYPICAL CROSS SECTION
STA. 43+72 TO 44+17

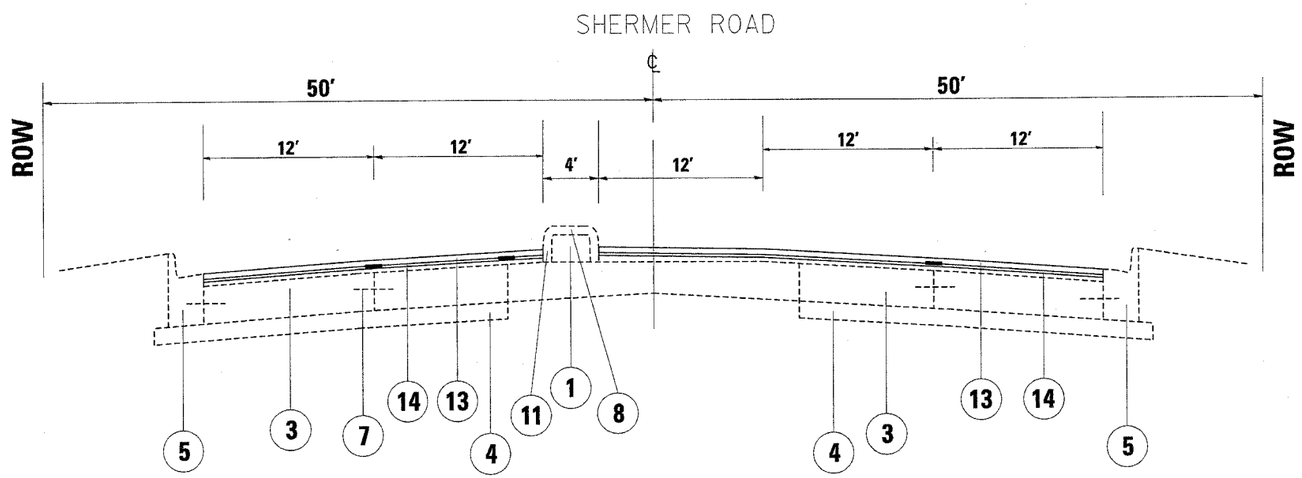

PROPOSED TYPICAL CROSS SECTION
STA. 43+72 TO 44+17

LEGEND

1. EXISTING COMPACTED EARTH FILL
2. EXISTING BITUMINOUS CONCRETE OVERLAY, +-3"
3. EXISTIING P.C.C. PAVEMENT, 9"
4. EXISTING SUB-BASE GRANULAR MATERIAL, TYPE A, 6"
5. EXISTING COMB. CONCRETE CURB & GUTTER, B.6-24
6. EXISTING COMB. CONCRETE CURB & GUTTER, B-6.12
7. EXISTING TIE BARS @ 2'-6" CENTERS
8. EXISTING CONCRETE MEDIAN SURFACE
9. EXISTING CONCRETE MEDIAN
10. EXISTING AGGREGATE SHOULDER
11. EXISTING CONCRETE CURB, TYPE BA
12. PROP. BITUMINOUS CONCRETE SURFACE REMOVAL, +- 2¼"
13. PROP. BITUMINOUS CONCRETE SURFACE COURSE, SUPERPAVE, MIX "D", N 70, 1½"
14. PROP. POLYMERIZED LEVELING BINDER, (MACHINE METHOD), SUPERPAVE, IL - 4.75, N 50, ¾"
15. PROP. AGGREGATE SHOULDERS, TYPE B

REVISIONS	
NAME	DATE

ILLINOIS DEPARTMENT OF TRANSPORTATION

SHERMER ROAD
WILLOW RD. TO OLD WILLOW RD.

EXISTING AND PROPOSED TYPICAL SECTIONS

SCALE: VERT. HORIZ.
DATE 4/6/2005
DRAWN BY
CHECKED BY

4/6/2005
c:\projects\d124599\d124599acm32
banksl