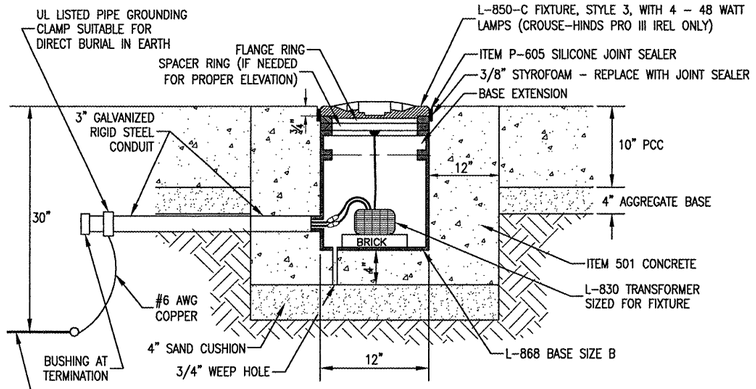

NOTE:
LIGHT INSTALLATION MUST BE MADE IN A BOX-OUT, AS DETAILED ON SHEET 31.

IN-PAVEMENT RUNWAY LIGHT

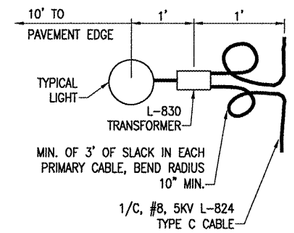

PLAN VIEW

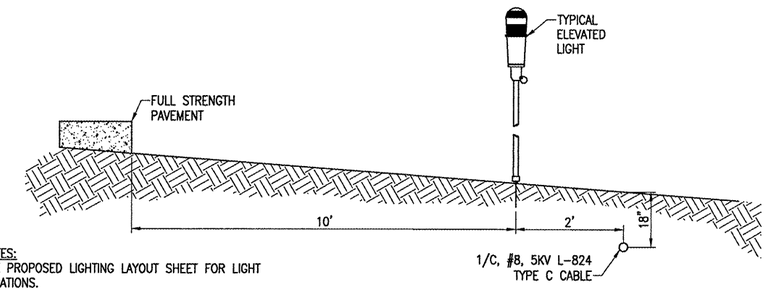

NOTES:
SEE PROPOSED LIGHTING LAYOUT SHEET FOR LIGHT LOCATIONS.

PROFILE VIEW

LIGHT AND CABLE INSTALLATION DETAIL

(NOT TO SCALE)

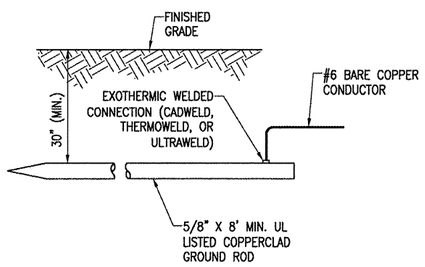

NOTES:
TYPE AND MINIMUM NUMBER OF GROUND RODS SHALL BE AS SPECIFIED ON THE PLAN.

COST OF GROUND RODS IS INCIDENTAL TO THE ASSOCIATED ITEMS REQUIRING GROUNDING UNLESS OTHERWISE SPECIFIED.

PER FAA AC 150/5340-30C DESIGN AND INSTALLATION DETAILS FOR AIRPORT VISUAL AIDS, A SAFETY GROUND ROD MUST BE INSTALLED AT EACH LIGHT FIXTURE. A SAFETY GROUND SHALL BE INSTALLED AT EACH STAKE MOUNTED LIGHT AND EACH TRANSFORMER BASE/LIGHT CAN ASSOCIATED WITH RUNWAY LIGHTTS, TAXIWAY LIGHTS, AND LIGHTED TAXI GUIDANCE SIGNS. THE SAFETY GROUND SHALL BE A #6 AWG BARE COPPER CONDUCTOR CONNECTED TO THE GROUND LUG ON THE RESPECTIVE L-867 TRANSFORMER BASE/LIGHT CAN OR MOUNTING STAKE AND A 5/8-INCH DIAMETER BY 8-FOOT LONG (MINIMUM) UL LISTED COPPER CLAD GROUND ROD. ALL GROUND RODS FOR AIRFIELD LIGHTING DEVICES SHALL BE INSTALLED IN A HORIZONTAL TRENCH 30" MINIMUM DEPTH BELOW FINISHED GRADE, TO AVOID PENETRATING THE COAL COMBUSTION BY-PRODUCT (CCB) BARRIER. DO NOT PENETRATE THE CCB BARRIER.

GROUND ROD

(NOT TO SCALE)

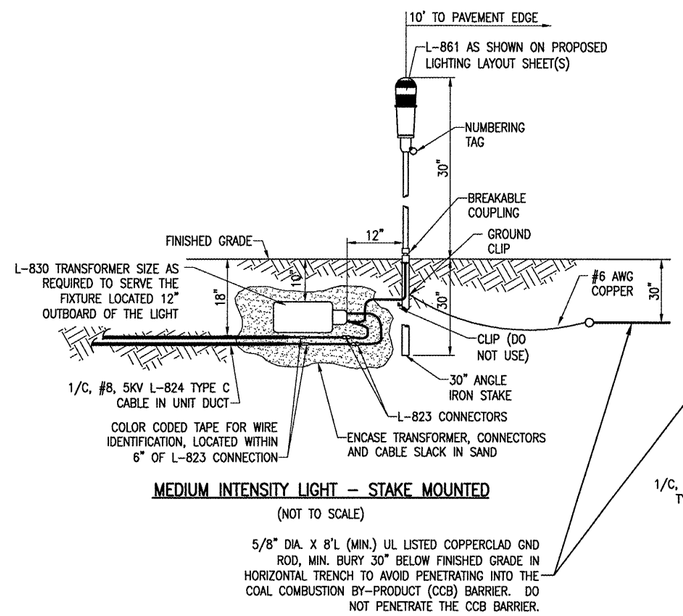

MEDIUM INTENSITY LIGHT - STAKE MOUNTED

(NOT TO SCALE)

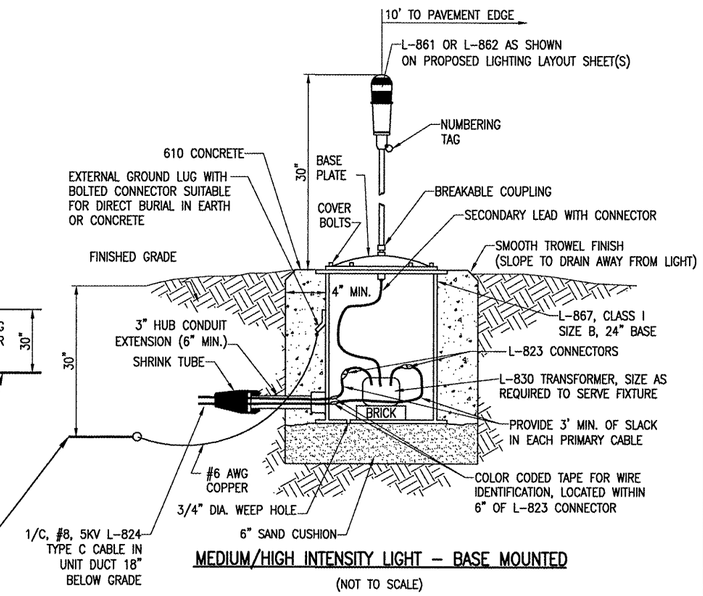

MEDIUM/HIGH INTENSITY LIGHT - BASE MOUNTED

(NOT TO SCALE)

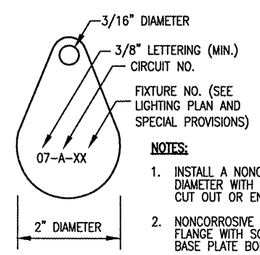

NOTES:

1. INSTALL A NONCORROSIVE DISC OF 2" MINIMUM DIAMETER WITH NUMBER PERMANENTLY STAMPED, CUT OUT OR ENGRAVED.
2. NONCORROSIVE DISC MAY BE ATTACHED TO LIGHT FLANGE WITH SCREW OR UNDER THE HEAD OF THE BASE PLATE BOLT.
3. SEE SPECIAL PROVISIONS FOR LETTERING.

IDENTIFICATION TAG DETAIL

LE039

HANSON

HANSON PROFESSIONAL SERVICES INC.

815 Commerce Drive, Suite 200
Oak Brook, Illinois 60523
Telephone: 630.990.3800
Fax: 630.990.3801

Illinois Professional Design Firm
Registration No. 184-001084

© Copyright Hanson Professional Service Inc. 2008

Chicago-Romeoville Airport

JOLIET REGIONAL PORT DISTRICT

1 George Michas Drive
Romeoville, Illinois 60446
Telephone: 815.838.9497
Fax: 815.838.9524

EXTEND RUNWAY 2-20: CONSTRUCT TAXIWAY TURNAROUND

AIP PROJECT NO. 3-17-0140-B42
IDA PROJECT NO. LOT-3792

No.	Drawing Issue Description	Date	By

Date
APRIL 18, 2008

Sheet Title
PROPOSED ELECTRICAL DETAILS SHEET 3

Project Number	07A0166
Layout By / Date	KNL 03/11/08
Designed By / Date	KNL 03/11/08
Reviewed By / Date	RMH 03/20/08
Drawn By	MV

Sheet No. 59

I:\07A085\02840\07A0166\DRAWINGS\SHEETS\59-ELECTRICAL DETAILS.DWG APR 18, 2008 10:19AM HAUSMO0862