STATE OF ILLINOIS
DEPARTMENT OF TRANSPORTATION

RTE.	SECTION	COUNTY	TOTAL SHEETS	SHEET NO.
TR-195	06-08117-00-BR	MORGAN	14	7
FED. ROAD DIST. NO.	ILLINOIS	CONTRACT NO. 93461		

SHEET NO. 2
4 SHEETS

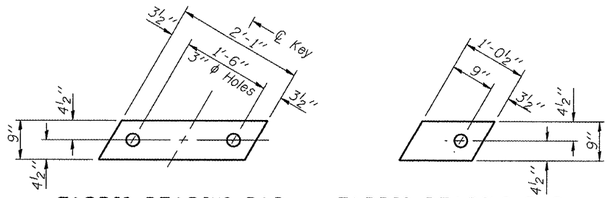

FABRIC BEARING PAD (Interior)

FABRIC BEARING PAD (Exterior)

FIXED

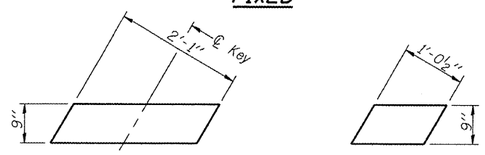

FABRIC BEARING PAD (Interior)

FABRIC BEARING PAD (Exterior)

EXPANSION

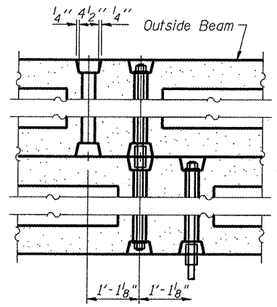

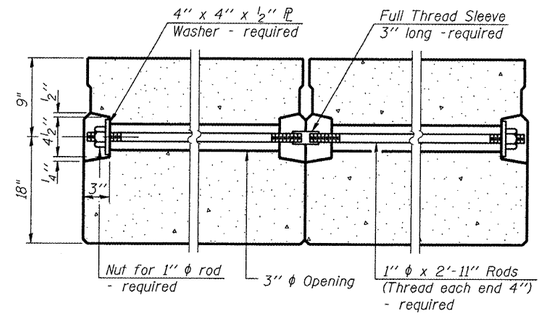

TYPICAL TRANSVERSE TIE ASSEMBLY

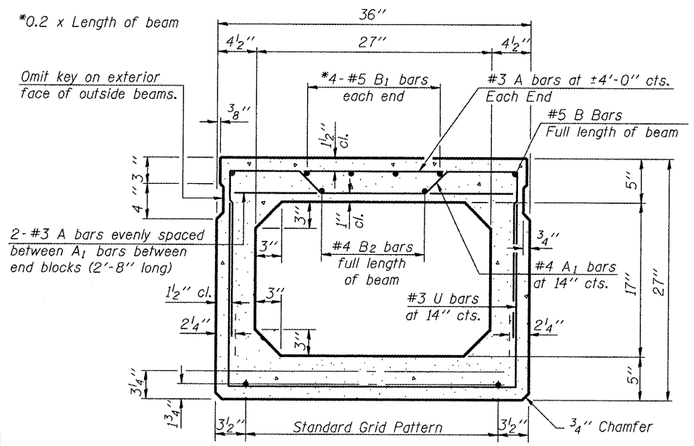

TYPICAL SECTION

½" ϕ Strands. Each Strand Stressed to 30,900 Lbs.
9-Strands 1¾" up. 4-Strands 3¼" up.
2-Strands 7½" up. 2-Strands 10½" up

Note:
Place strands symmetrically about ℄ of beam.

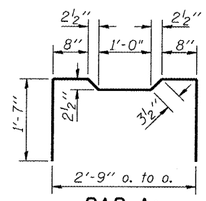

BAR A1

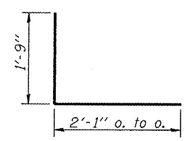

BAR D

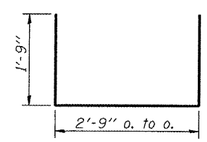

BARS U & U1

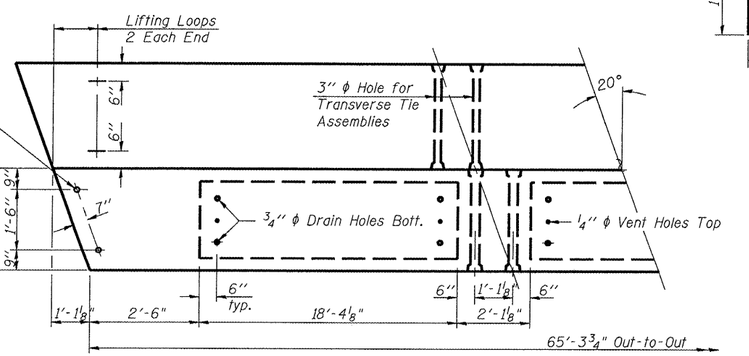

PLAN

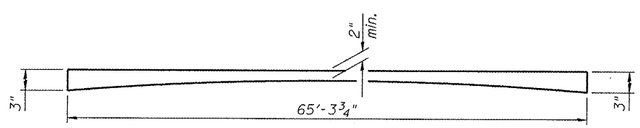

HOT-MIX ASPHALT SURFACE PROFILE

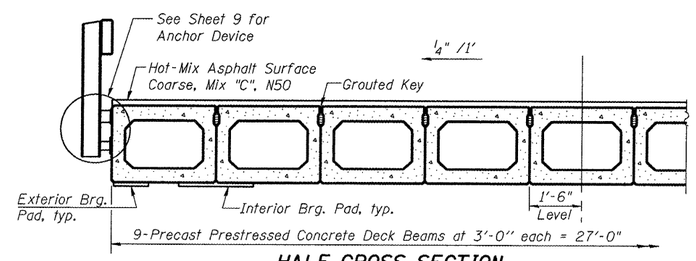

HALF CROSS SECTION

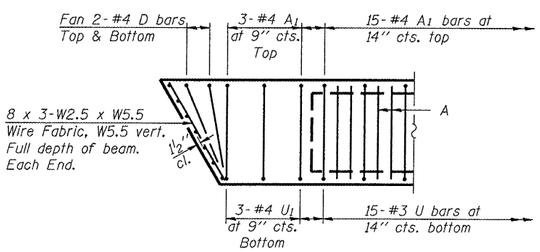

END PLAN

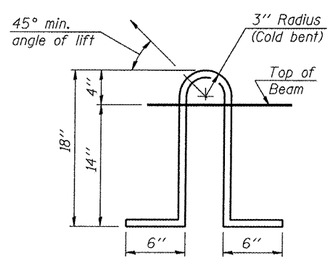

LIFTING LOOP DETAIL

NOTES

Prestressing steel shall be uncoated high strength, low relaxation 7-wire strand, Grade 270.
The nominal diameter shall be ½" and the nominal cross-sectional area shall be 0.153 sq. in.
Lifting loops shall be 2-½" ϕ-270 ksi strands, as shown.
The 1" ϕ rods in the transverse tie assembly shall be tightened to a snug fit and the threads set. Pockets that receive transverse tie bar on outside shall be filled with grout after transverse tie assembly is in place.
Non prestressing steel shall conform to ASTM A 706, Grade 60.
The bearing seat surfaces shall be adjusted by shimming to assure firm and even bearing. Two ⅛" fabric adjusting shims of the dimensions of the Exterior Bearing Pad shall be provided for each bearing.
Keyway surfaces shall be cleaned to remove form oil or other bond breaking material prior to shipment of the beams. Cleaning shall be done by sandblasting the keyway areas between top of the beam and the bottom edge of the key.
Corrosion Inhibitor, per Article 1020.05(b)(12) of the Standard Specifications, shall be used in the concrete for precast prestressed concrete deck beams.
Required Release Strength, f'ci, shall be 4000 p.s.i.
Rail Post Anchor Devices to be cast into exterior face of outside beams as specified elsewhere.

BILL OF MATERIAL

Precast Prestressed Conc. Deck Bms.	Sq. Ft.	1763.5
Hot-Mix Asphalt Suface Coarse, Mix "C", N50	Ton	28

DRAWN BY JLL	SUPERSTRUCTURE S.N. 069-3264
CHECKED BY MBH	BRIDGE TR-195 OVER MAUVAISE TERRE CREEK TRIBUTARY
APPROVED BY REG	
DATE JANUARY 2008	MORGAN COUNTY, ILLINOIS
REVISIONS DATE / BY	BENTON & ASSOCIATES, INC. Consulting Engineers / Land Surveyors 1970 West Lafayette Ave. Jacksonville, IL 62650 Phone: 217-245-4146 Fax: 217-245-4149 IL Design Firm Registration No. 184-000852
FIELD BOOK:	SCALE: / JOB NO. 07E1789 / SHEET 7 OF 14