CONTROLLER SEQUENCE

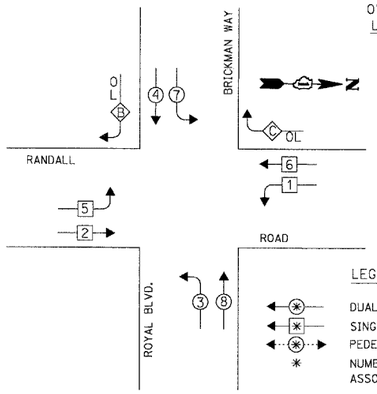

OVERLAP LETTER		PROTECTED PHASE		PERMISSIVE PHASE
B	=	5	+	4
C	=	7	+	6

LEGEND

- DUAL ENTRY PHASE
- SINGLE ENTRY PHASE
- PEDESTRIAN PHASE
- NUMBER REFERS TO ASSOCIATED PHASE

PHASE DESIGNATION DIAGRAM

EMERGENCY VEHICLE PREEMPTION SEQUENCE

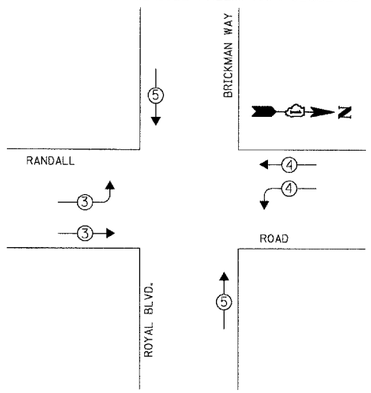

EXISTING EMERGENCY VEHICLE PREEMPTORS			
EMERGENCY VEHICLE PREEMPTOR	3	4	5
MOVEMENT			

N.T.S.

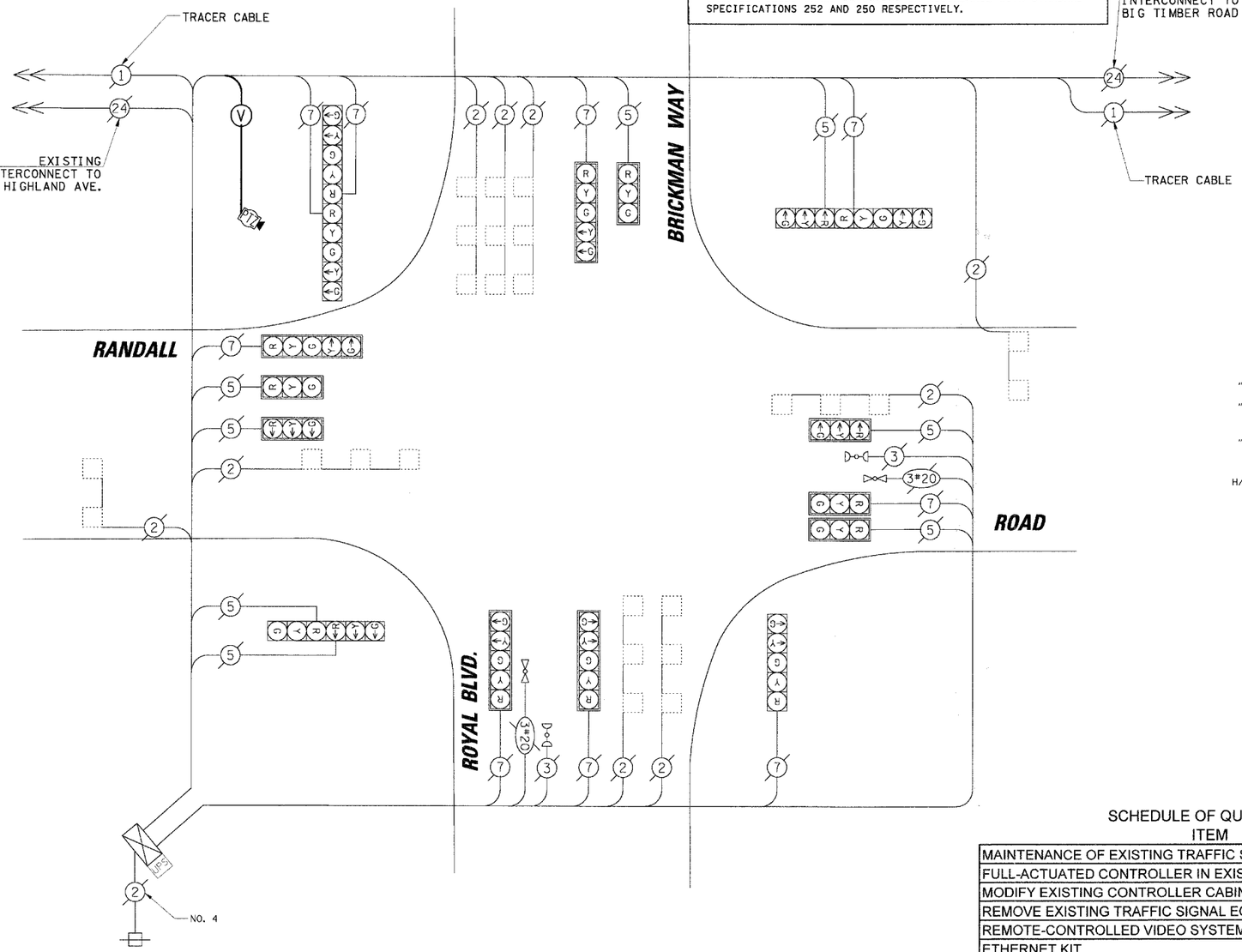

RESTORATION OF WORK AREA. RESTORATION OF THE TRAFFIC SIGNAL WORK AREA SHALL BE INCIDENTAL TO THE RELATED PAY ITEM SUCH AS FOUNDATION, CONDUIT, HANDHOLE, TRENCH AND BACKFILL, ETC., AND NO EXTRA COMPENSATION SHALL BE ALLOWED. ALL ROADWAY SURFACES SUCH AS SHOULDERS, MEDIANS, SIDEWALKS, PAVEMENT, ETC. SHALL BE REPLACED IN KIND. ALL DAMAGE TO MOWED LAWNS SHALL BE REPLACED WITH AN APPROVED SOD, AND ALL DAMAGE TO UNMOWED FIELDS SHALL BE SEEDED IN ACCORDANCE WITH STANDARD SPECIFICATIONS 252 AND 250 RESPECTIVELY.

CABLE PLAN LEGEND

EXISTING	PROPOSED	
G	G	8" (200mm) TRAFFIC SIGNAL SECTION
R	R	12" (300mm) TRAFFIC SIGNAL SECTION
W	W	12" (300mm) PEDESTRIAN SIGNAL SECTION
		12" (300mm) PEDESTRIAN SIGNAL SECTION
		CONTROLLER CABINET
		SERVICE INSTALLATION
T	T	TELEPHONE INSTALLATION
		VEHICLE DETECTOR, INDUCTION LOOP
		MAGNETIC DETECTOR
		EMERGENCY VEHICLE LIGHT DETECTOR
		CONFIRMATION BEACON
		PUSHBUTTON DETECTOR
2	2	DENOTES NUMBER OF CONDUCTORS. ALL CABLE NO. 14 EXCEPT AS INDICATED. ALL LOOP DETECTOR CABLE TO BE SHIELDED.
1	1	GROUND CABLE IN CONDUIT NO. 6 SOLID COPPER (GREEN)
24	24	FIBER OPTIC CABLE IN CONDUIT NO. 62.5/125 2-MM12F SM12F
36	36	FIBER OPTIC CABLE IN CONDUIT NO. 62.5/125 2-MM12F SM24F
R Y G Y G	R Y G Y G	SIGNAL FACE WITH BACKPLATE. "P" INDICATES PROGRAMMED HEAD.
"P"	"P"	
"E"		RAILROAD CONTROL CABINET
"E"		ILLUMINATED SIGN "NO LEFT TURN"
"E"		ILLUMINATED SIGN "NO RIGHT TURN"
H/C	C	GROUND ROD AT HANDHOLE (H), DOUBLE HANDHOLE (H), OR CONTROLLER (C)
P	P	GROUND ROD AT POST (P) OR MAST ARM POLE (MA)
S	S	GROUND ROD AT ELECTRIC SERVICE INSTALLATION
UPS	UPS	UNINTERRUPTABLE POWER SUPPLY
V	V	VENDOR SPECIFIC CABLE
PTZ	PTZ	DOME CAMERA (PAN/TILT/ZOOM)
		VIDEO DETECTION CAMERA

I.D.O.T. TRAFFIC SIGNAL INSTALLATION ELECTRICAL SERVICE REQUIREMENTS					TOTAL WATTAGE
TYPE	NO. OF LAMPS	WATTAGE INCAND.	WATTAGE LED	X % OPERATION	
SIGNAL (RED)	17		17	0.50	144.50
(YELLOW)	17		25	0.25	106.25
(GREEN)	17		15	0.25	63.75
ARROW	16		12	0.10	19.20
PED. SIGNAL	-		25	1.00	-
CONTROLLER	1		100	1.00	100.00
ILLUM. SIGN	-		25	0.05	-
VIDEO SYSTEM	1	-	150	1.00	150.00
FLASHER	-			0.50	-
				TOTAL =	583.70

ENERGY COSTS TO:

KANE COUNTY DIVISION OF TRANSPORTATION

41W011 BURLINGTON ROAD
ST. CHARLES, IL 60175

ENERGY SUPPLY: CONTACT: MIKE WIDHALM
PHONE: (847) 608-2376
COMPANY: COMED

FOUNDATION (DEPTH)	FT.	(m)
TYPE A - POST	4	(1.2)
D - CONTROLLER	4	(1.2)
E - M. ARM POLE		
24" (600mm)	10	(3.0)
30" (750mm)	15	(4.6)
36" (900mm)	15	(4.6)

CABLE SLACK	FT.	(m)
HANDHOLE	6.5	(2.0)
DOUBLE HANDHOLE	13	(4.0)
SIGNAL POST	2	(1.0)
CONTROLLER CAB.	1	(0.5)
FIBER OPTIC	13	(4.0)
ELECTRIC SERVICE	1	(0.5)
GROUND CABLE	1	(0.5)

VERTICAL	FT.	(m)
ALL FOUNDATIONS	3.5	(1.0)
MAST ARM (L) POLE	20'+L-2= (6m+L-0.6m)=	
BRACKET MOUNTED	13	(4.0)
PED. PUSHBUTTON	4	(1.2)
ELECTRIC SERVICE	13.5	(4.1)
SERVICE TO GROUND	13.5	(4.1)
POST MOUNTED	6	(1.8)

NOTE:
THE TRAFFIC SIGNAL CONTROLLER EQUIPMENT FOR THIS PROJECT SHALL BE "EAGLE" TO MATCH THE EXISTING ADJACENT SYSTEM.

SCHEDULE OF QUANTITIES

ITEM	UNIT	TOTAL
MAINTENANCE OF EXISTING TRAFFIC SIGNAL INSTALLATION	EACH	1
FULL-ACTUATED CONTROLLER IN EXISTING CABINET, SPECIAL	EACH	1
MODIFY EXISTING CONTROLLER CABINET	EACH	1
REMOVE EXISTING TRAFFIC SIGNAL EQUIPMENT	EACH	1
REMOTE-CONTROLLED VIDEO SYSTEM	EACH	1
ETHERNET KIT	EACH	1
CONFLICT MONITOR	EACH	1

CONSTRUCTION NOTES:

1. REPLACE EXISTING CONTROLLER AND CONFLICT MONITOR.
2. INSTALL ETHERNET KIT.
3. INSTALL PTZ CAMERA ON THE COMBINATION MAST ARM POLE IN THE SOUTHWEST CORNER.

CHRISTOPHER B. BURKE ENGINEERING LTD.
9575 West Higgins Road, Suite 600
Rosemont, Illinois 60018
(847) 823-0500

PROFILE | PLAN | BY | DATE

FILE NAME = N:\kanecounty\070616\Traffic\C48_Royal.dgn	USER NAME = MWILLIAM	DESIGNED -	REVISED -
		DRAWN -	REVISED -
	PLOT SCALE = 20'	CHECKED -	REVISED -
	PLOT DATE = 1/28/2008	DATE -	REVISED -

STATE OF ILLINOIS
DEPARTMENT OF TRANSPORTATION

CABLE PLAN

RANDALL ROAD AT ROYAL BOULEVARD

SCALE:

F.A.P. RTE.	SECTION	COUNTY	TOTAL SHEETS	SHEET NO.
336	06-00346-00-TL	KANE	69	32
		CONTRACT NO. 63011		

FED. ROAD DIST. NO. | ILLINOIS | FED. AID PROJECT