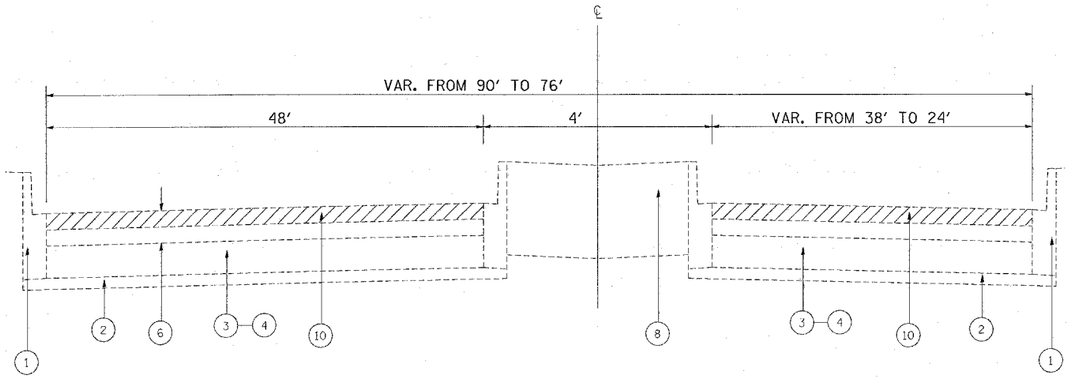

EXISTING TYPICAL SECTION
ILL 53 (BOLINGBROOK DRIVE)
STA. 74+98 TO STA. 76+64

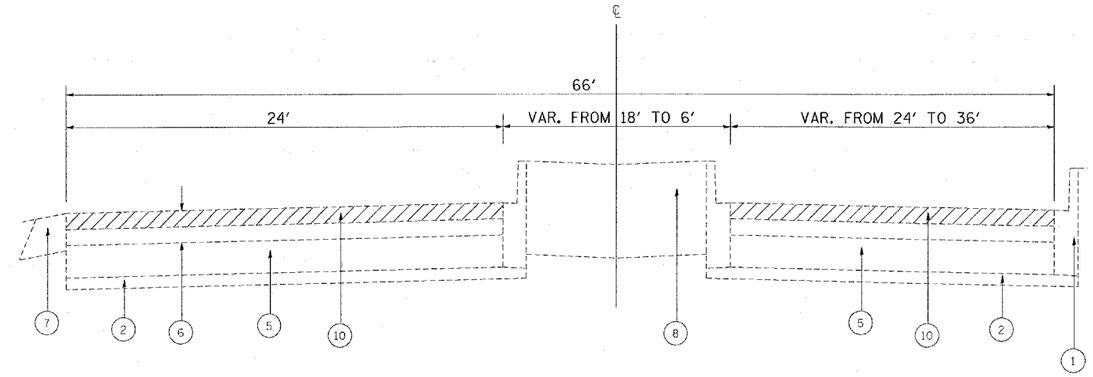

EXISTING TYPICAL SECTION
JOLIET ROAD
STA. 5+34 TO STA. 15+20

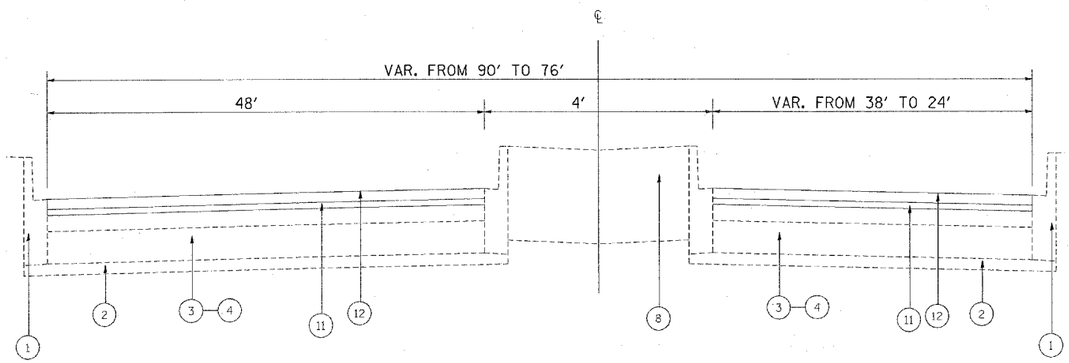

PROPOSED TYPICAL SECTION
ILL 53 (BOLINGBROOK DRIVE)
STA. 74+98 TO STA. 76+64

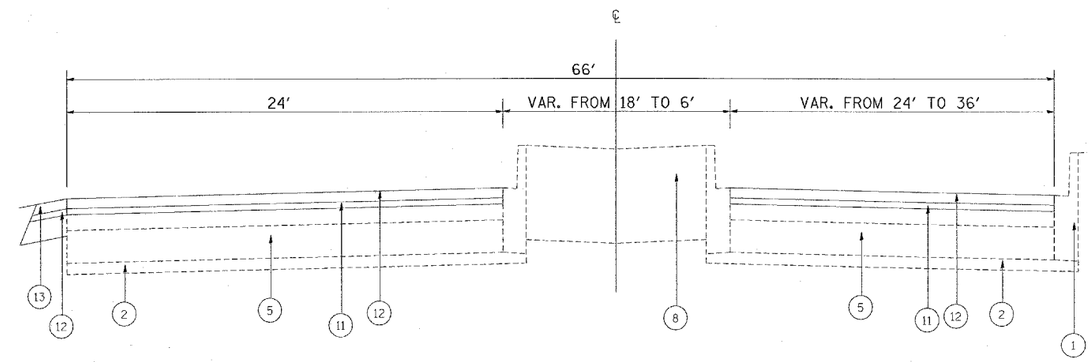

PROPOSED TYPICAL SECTION
JOLIET ROAD
STA. 5+34 TO STA. 15+20

LEGEND

1. EXISTING COMBINATION CONCRETE CURB AND GUTTER
2. EXISTING SUB-GRADE
3. EXISTING HOT-MIX ASPHALT BASE COURSE 10″ (NOTE: BETWEEN STA. 117+49 TO 272+53)
4. EXISTING PCC BASE COURSE 9″ (NOTE: BETWEEN 46+98 TO 100+96)
5. EXISTING PCC BASE COURSE 10″
6. EXISTING HOT-MIX ASPHALT OVERLAY
7. EXISTING HMA SHOULDER 8″
8. EXISTING P.C. CONCRETE BARRIER MEDIAN (PLANTED MEDIAN)

** 9. EXISTING ASPHALT MOUNTABLE MEDIAN

10. PROSPOSED HOT-MIX ASPHALT SURFACE REMOVAL, 2 1/2″
11. PROPOSED POLYMERIZED LEVELING BINDER (MACHINE METHOD), IL-4.75, N50, 3/4″
12. PROPOSED POLYMERIZED HOT-MIX ASPHALT SURFACE COURSE, MIX "F", N90, 1 3/4″

FILE NAME = c:\projects\d116908\d116908aa.dgn	USER NAME = abreuah	DESIGNED -	REVISED -	STATE OF ILLINOIS DEPARTMENT OF TRANSPORTATION	ILL 53 (BOLINGBROOK DRIVE) TYPICAL SECTIONS	F.A.P. RTE.	SECTION	COUNTY	TOTAL SHEETS	SHEET NO.
		DRAWN -	REVISED -			870	534 RS-3	WILL	41	5
	PLOT SCALE = 50.0000 ′ / IN.	CHECKED -	REVISED -					CONTRACT NO. 60E08		
	PLOT DATE = 2/20/2008	DATE -	REVISED -		SCALE: SHEET NO. OF SHEETS STA. 17+49 TO STA. 172+53	FED. ROAD DIST. NO. 1	ILLINOIS	FED. AID PROJECT		