HEUER AND ASSOCIATES Consulting Engineers 2315 Enterprise Drive - Suite 102 Westchester, IL 60154-5811 708-492-1000	F.A.U. RTE.	SECTION	COUNTY	TOTAL SHEETS	SHEET No.
	1004	08-00079-03-FP	COOK	94	83
	STA.		TO STA.		
	FED. ROAD DIST. NO. 1	ILLINOIS	FED. AID PROJECT		

CONTRACT No. 63353

NOTES:

1. ADJUSTING RINGS AND FRAMES SHALL BE ALIGNED.
2. ADJUSTING RINGS SHALL BE FREE OF ANY CRACKS, CHIPS, AND DAMAGE.
3. MAXIMUM ADJUSTING HEIGHT SHALL BE 12" FOR STORM AND WATER STRUCTURES AND 8" FOR SANITARY STRUCTURES.
4. MINIMUM NUMBER OF ADJUSTING RINGS SHALL BE USED.

A) ALL PUBLIC AND PRIVATE UTILITIES IN HARD SURFACE AREAS (RIGHT OF WAY OR EASEMENTS)

5. ADJUSTING RINGS AND FRAMES SHALL BE SET IN PLACE ON FULL MORTAR BED.
6. A 12" WIDE CONCRETE COLLAR SHALL BE INSTALLED FROM 3" BELOW LOWEST RING TO 2" BELOW FINISH GRADE OF TOP OF FRAME IN ALL WATER AND SEWER STRUCTURES.

B) ALL PUBLIC AND PRIVATE UTILITIES IN LANDSCAPED AREAS

7. ADJUSTING RINGS AND FRAMES SHALL BE SET IN PLACE WITH A BUTYL RUBBER JOINT SEALANT (EZ STICKS, KENT SEAL).
8. AN EXTERIOR RUBBER GASKET SHALL BE INSTALLED FROM 3" BELOW LOWEST RING TO 2" TOP OF FRAME OVER ALL ADJUSTING RINGS.

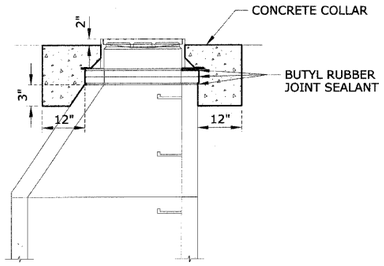

STRUCTURE FRAME COLLAR DETAIL

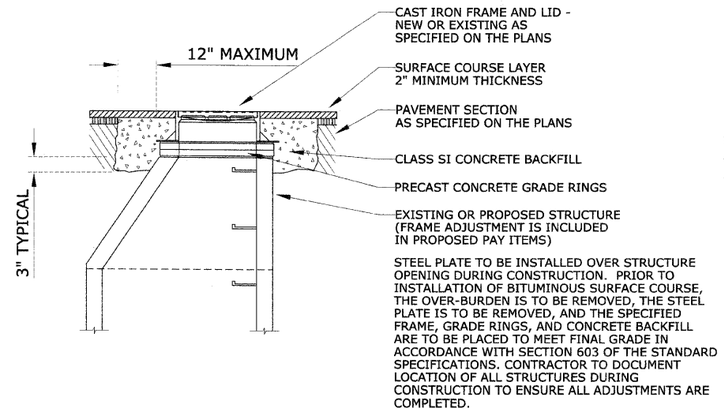

FRAME ADJUSTMENT DETAIL

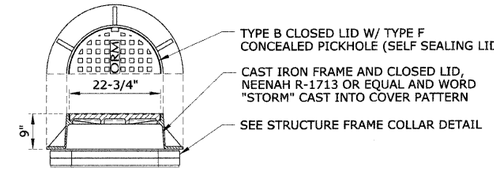

TYPE 1 FRAME AND SELF SEALING CLOSED LID

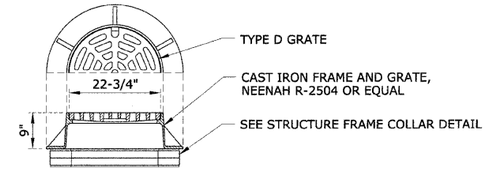

TYPE 1 FRAME AND GRATE

ALTERNATIVE FRAMES AND GRATES/LIDS

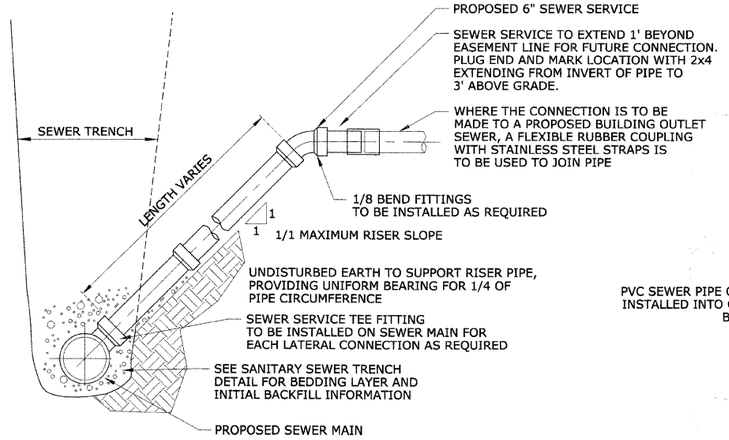

SANITARY SEWER SERVICE TEE AND RISER

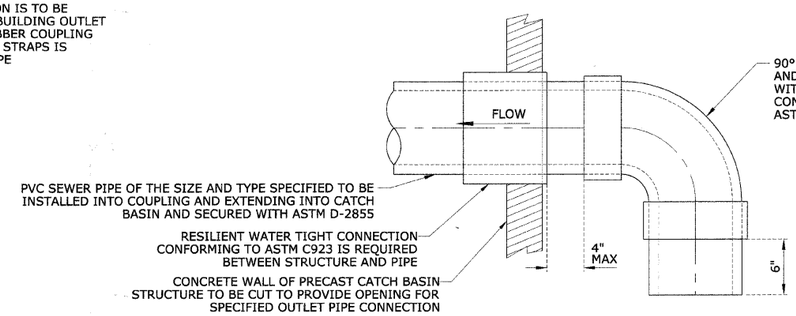

PVC VAPOR TRAP

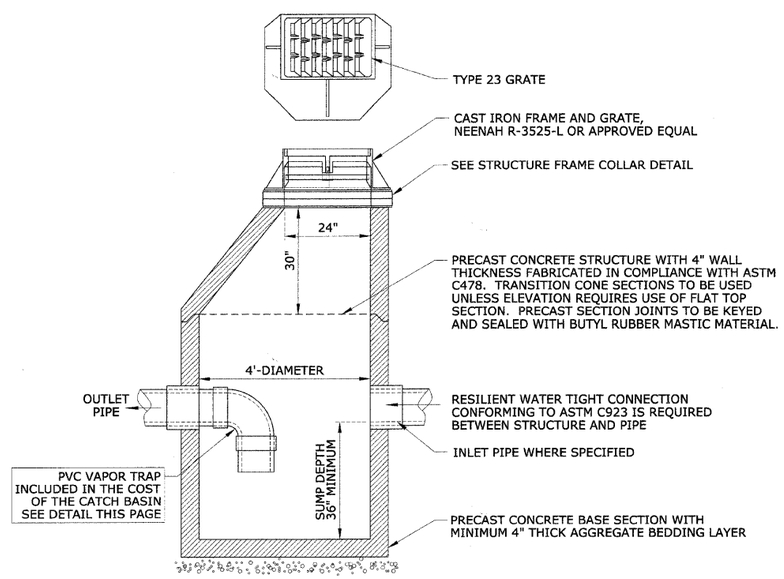

CATCH BASIN, TYPE A, SPECIAL, 4'-DIAMETER

WITH VAPOR TRAP AND TYPE 23 FRAME AND GRATE

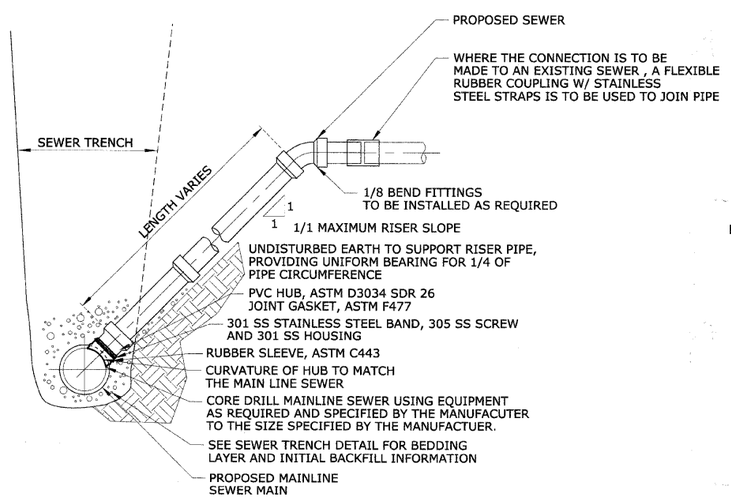

COMPRESSION FIT CONNECTION AND RISER

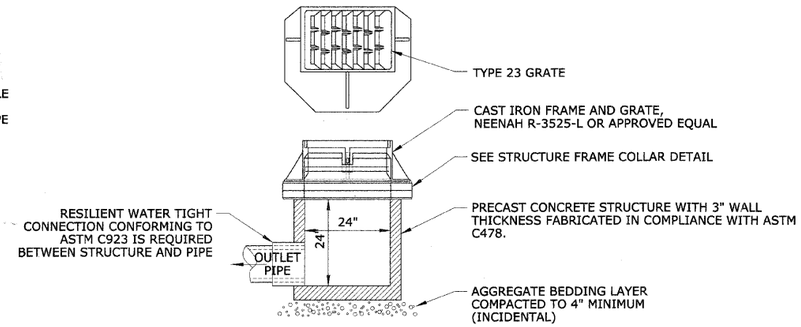

INLET, TYPE A, 24"

WITH TYPE 23 FRAME AND GRATE

REVISIONS	
NAME	DATE
PER VLG	01-18-10

ILLINOIS DEPARTMENT OF TRANSPORTATION

BLUFF AVENUE IMPROVEMENTS STAGE 3

CONSTRUCTION DETAILS - SPECIAL

SCALE: NTS

DATE 11/30/2009

DRAWN BY H&A

CHECKED BY JRH

PLAN

NOTE BOOK NO.

SURVEYED
PLOTTED
ALIGNMENT CHECKED
RIGHT OF WAY CHECKED
CADD FILE NAME

BY | DATE

PROFILE

NOTE BOOK NO.

SURVEYED
PLOTTED
GRADES CHECKED
BRIDGE
STRUCTURE NO.&TRS CHKD

BY | DATE