HEUER AND ASSOCIATES Consulting Engineers 2315 Enterprise Drive - Suite 102 Westchester, IL 60154-5811 708-492-1000	F.A.U. RTE.	SECTION	COUNTY	TOTAL SHEETS	SHEET No.
	1004	08-00079-03-FP	COOK	94	80
	STA.		TO STA.		
	FED. ROAD DIST. NO. 1	ILLINOIS	FED. AID PROJECT		

CONTRACT No. 63353

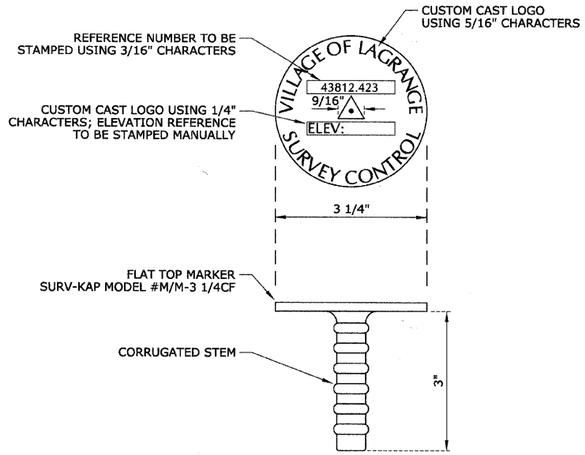

BRASS TABLET

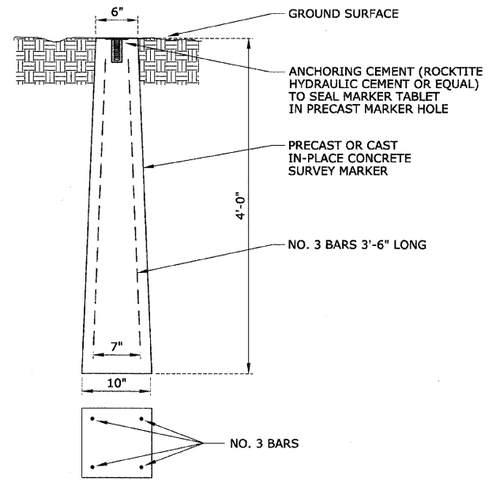

CONCRETE MARKER

PERMANENT SURVEY MARKER

SURVEY MARKER DATA		
SHEET NUMBER	BLOCK LOCATION	STAMPED REFERENCE NUMBER
30 32 34	4-423 4-417 4-404	43812-423 43812-417 43812-404

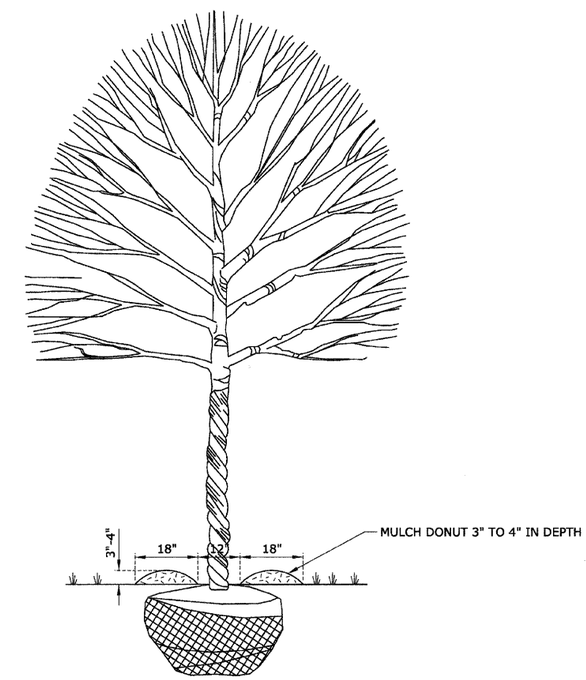

TREE MULCH DONUT DETAIL

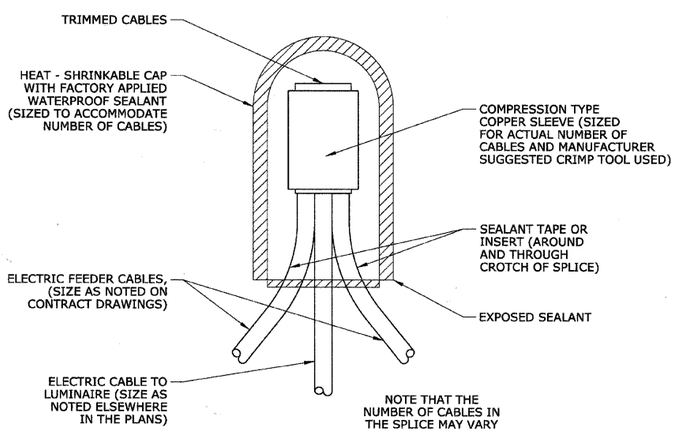

NOTE:

THESE ITEMS ARE TO BE PAID FOR UNDER THE PAY ITEM TO RELOCATE EXISTING STREETLIGHT, SPECIAL.

SPLICING ELECTRIC CABLES BASIC MATERIALS AND METHODS

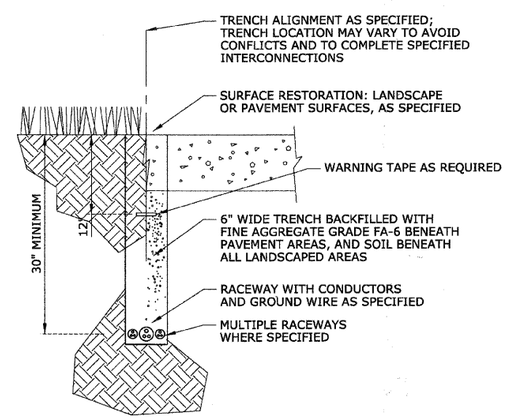

NOTE:

THESE ITEMS ARE TO BE PAID FOR UNDER THE PAY ITEM TO RELOCATE EXISTING STREETLIGHT, SPECIAL.

TYPICAL ELECTRICAL TRENCH

REVISIONS	
NAME	DATE

ILLINOIS DEPARTMENT OF TRANSPORTATION

BLUFF AVENUE IMPROVEMENTS STAGE 3

CONSTRUCTION DETAILS - SPECIAL

SCALE: NTS — DRAWN BY H&A

DATE 11/30/2009 — CHECKED BY JRH

PLAN: SURVEYED | PLOTTED | ALIGNMENT CHECKED | PLOT PLAN CHECKED | FIELD BK. NAME | NOTE BOOK NO. | BY | DATE

PROFILE: SURVEYED | PLOTTED | GRADES CHECKED | S.M. NO. | STRUCTURE NOTAT'NS CH'KD | NOTE BOOK NO. | BY | DATE