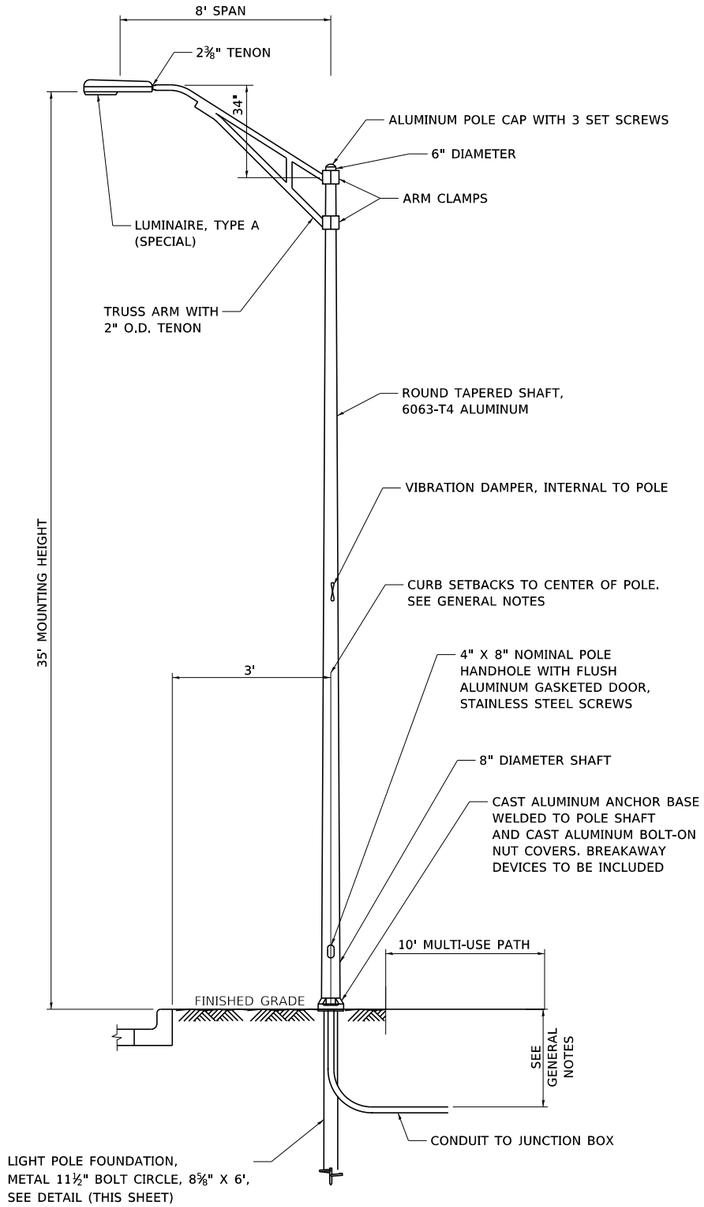

LIGHT POLE, ALUMINUM, 35 FT. M.H., 8 FT. MAST ARM ASSEMBLY DETAIL

SCALE: N.T.S.

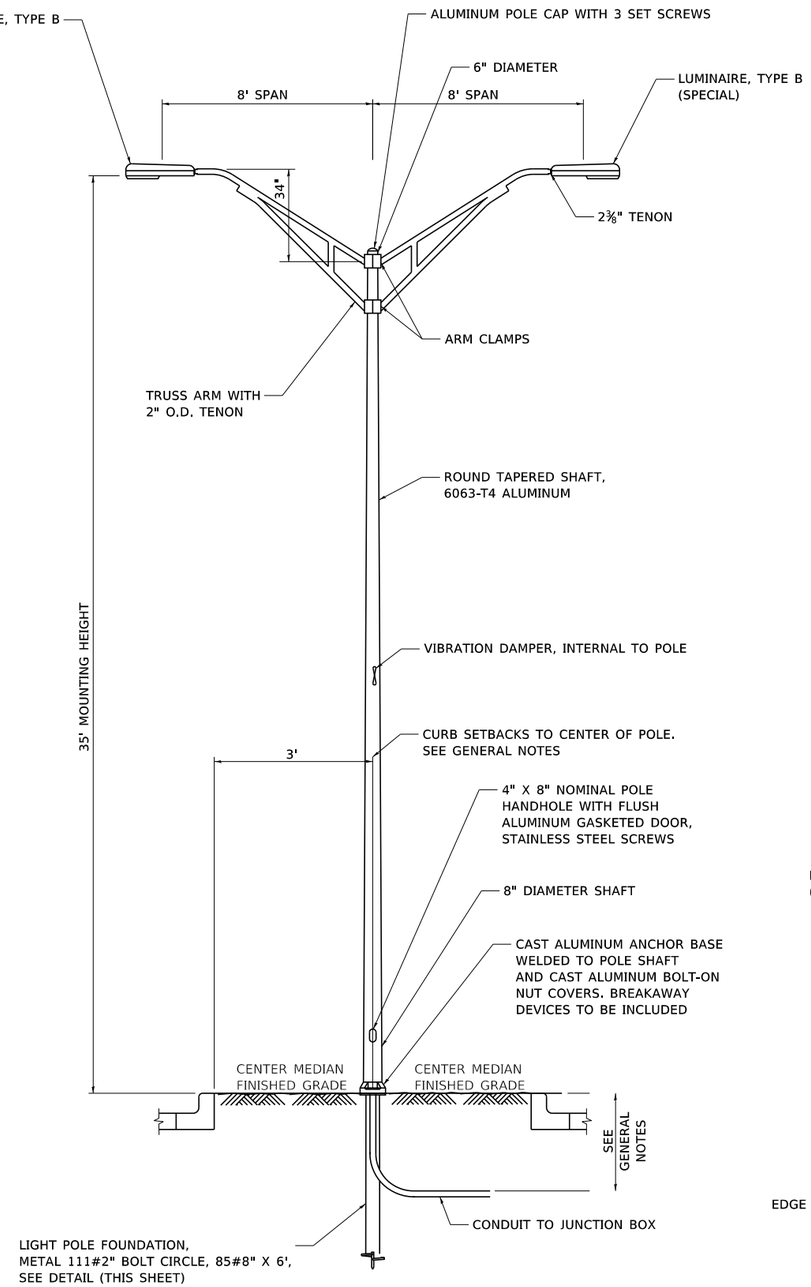

LIGHT POLE (SPECIAL) ASSEMBLY DETAIL

SCALE: N.T.S.

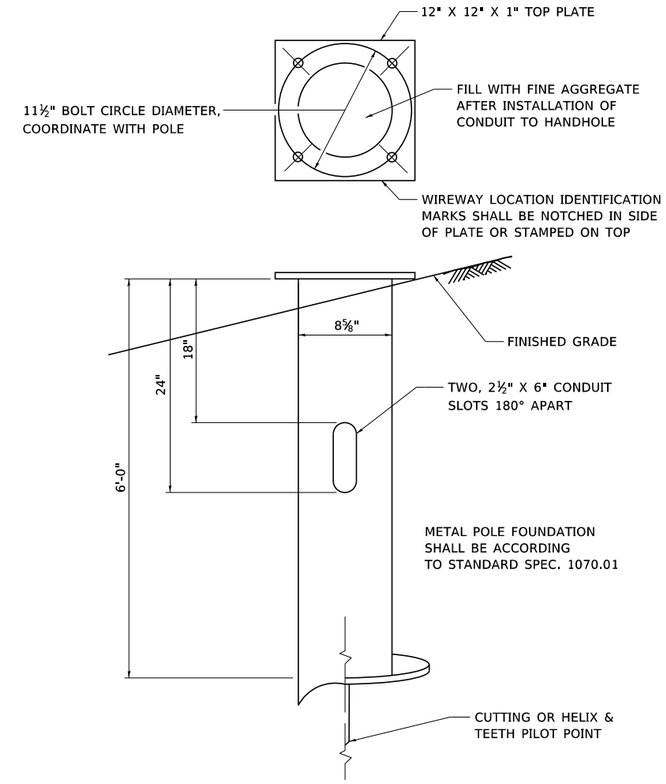

LIGHT POLE FOUNDATION, METAL, 11–½" BOLT CIRCLE, 8–⅝" X 6' DETAIL

SCALE: N.T.S.

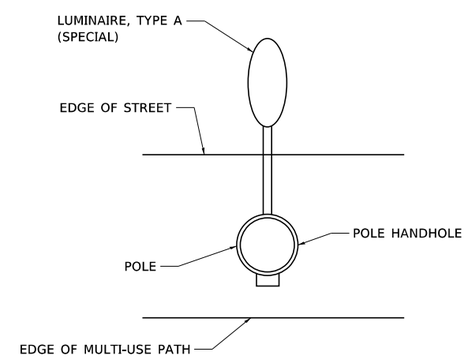

LIGHT POLE ORIENTATION DETAIL (SINGLE 8 FT. ARM)

SCALE: N.T.S.

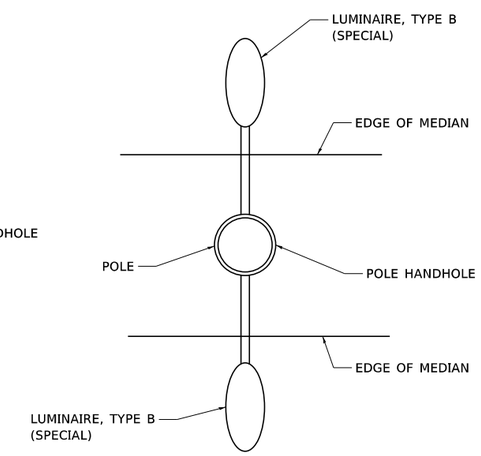

LIGHT POLE ORIENTATION DETAIL (TWIN 8 FT. ARMS)

SCALE: N.T.S.

MODEL: DET 01
FILE NAME: X:\Production Files\2021\421-1003\Departments\TEP\Analysis\Lighting Design\Lighting Details.dgn

LOCHMUELLER GROUP
201 West Springfield Avenue, Suite 1012
Champaign, IL 61820
PHONE: 217.673.7633

USER NAME = Nick.Burrus	DESIGNED - NMN	REVISED -	
	DRAWN - WJS	REVISED -	
PLOT SCALE = 20.0000 ' / in.	CHECKED - TWK	REVISED -	
PLOT DATE = 10/1/2025	DATE -	REVISED -	

STATE OF ILLINOIS
DEPARTMENT OF TRANSPORTATION

LIGHTING DETAILS

SCALE: | SHEET 1 OF 5 SHEETS | STA. TO STA.

F.A.U. RTE.	SECTION	COUNTY	TOTAL SHEETS	SHEET NO.
7159	19-000314-00-PV	CHAMPAIGN	197	101
		CONTRACT NO. 91642		
		ILLINOIS	FED. AID PROJECT	

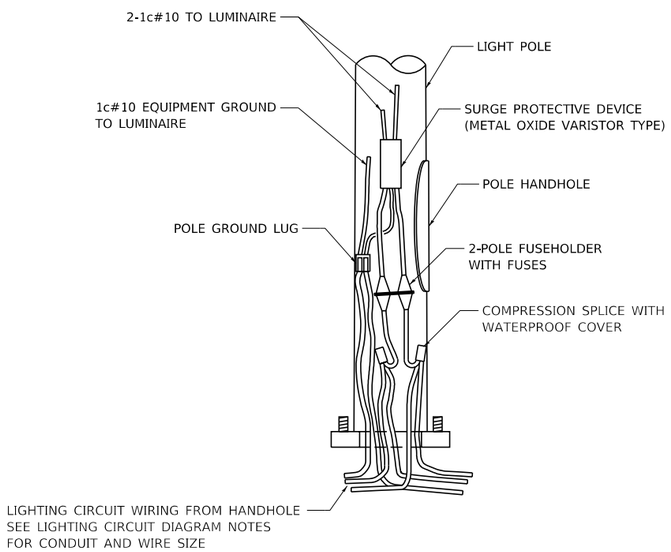

NOTES:

1. LIGHT POLE WIRING SHOWN IS INCLUDED IN THE LUMINIARE PAY ITEM.
2. CONDUCTOR SLACK IS REQUIRED BUT NOT SHOWN. CONDUCTOR SLACK IN LIGHT POLES SHALL BE OF A LENGTH SUFFICIENT TO BE WITHDRAWN A MINIMUM OF 18" OUT OF POLE HANDHOLE.

LIGHT POLE WIRING DETAIL

SCALE: N.T.S.

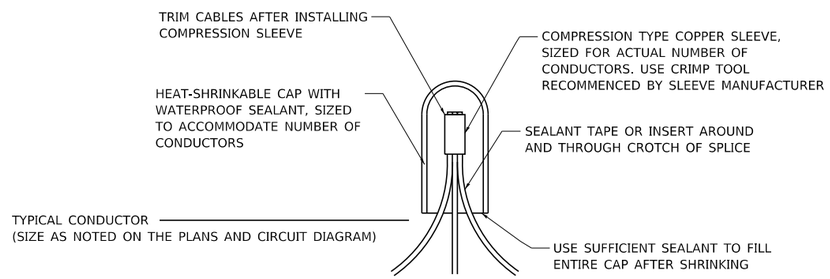

NOTES:

1. NUMBER OF CONDUCTORS IN SPLICE MAY VARY.
2. PROVIDE WATERPROOF SPLICE FOR ALL SPLICES AND TERMINATIONS. SPLICES SHALL BE ACCORDING TO ARTICLE 1066.06(b).

WATERPROOF SPLICE DETAIL

SCALE: N.T.S.

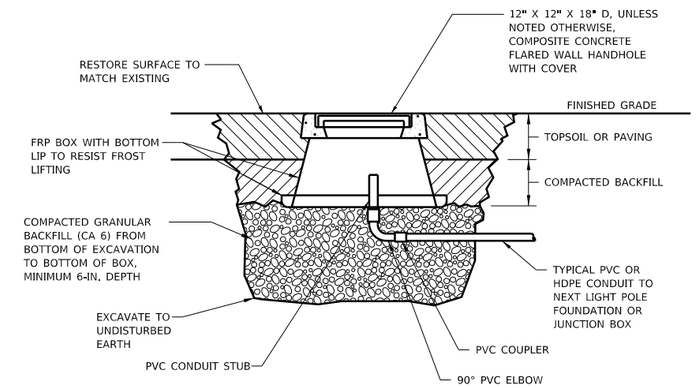

NOTES

1. PROVIDE JUNCTION BOX ACCORDING TO STANDARD SPECIFICATIONS SECTION 813.
2. INSTALL TOP FLUSH WITH FINISHED GRADE. MATCH SLOPE OF FINISHED GRADE.
3. CONDUITS ENTERING HANDHOLE SHALL BE VERTICAL AND PERPENDICULAR TO BOTTOM OF BOX. POSITION CONDUITS NEAR CENTER OF BOX.

JUNCTION BOX (SPECIAL) DETAIL

SCALE: N.T.S.

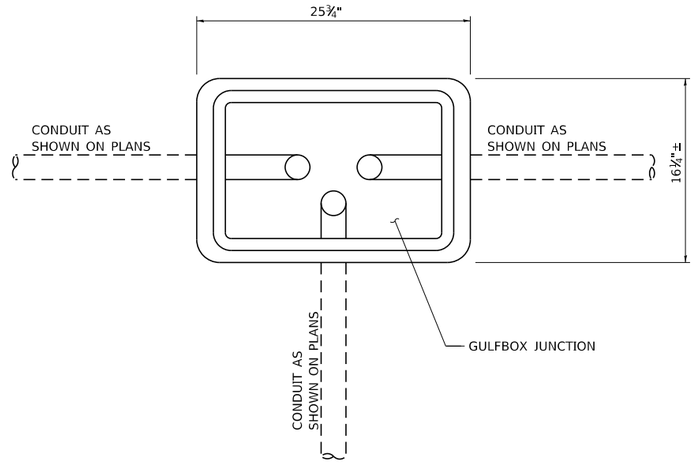

PLAN

SCALE: N.T.S.

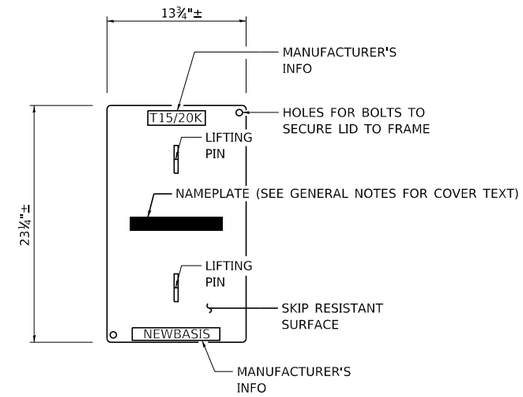

COVER

SCALE: N.T.S.

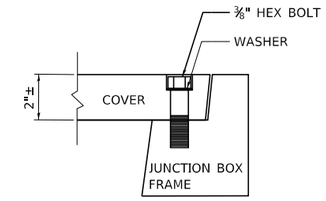

COVER SECURING DETAIL

SCALE: N.T.S.

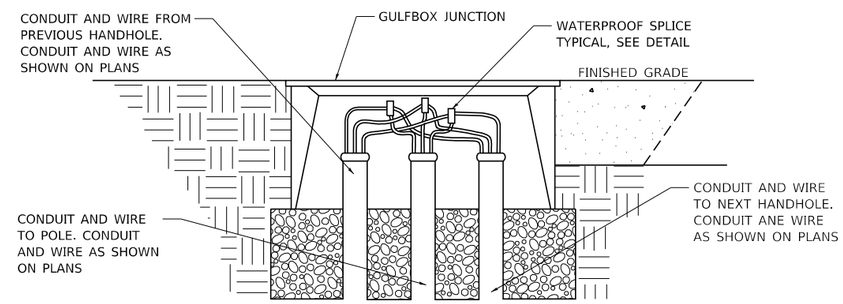

GULFBOX SPLICE DETAIL

SCALE: N.T.S.

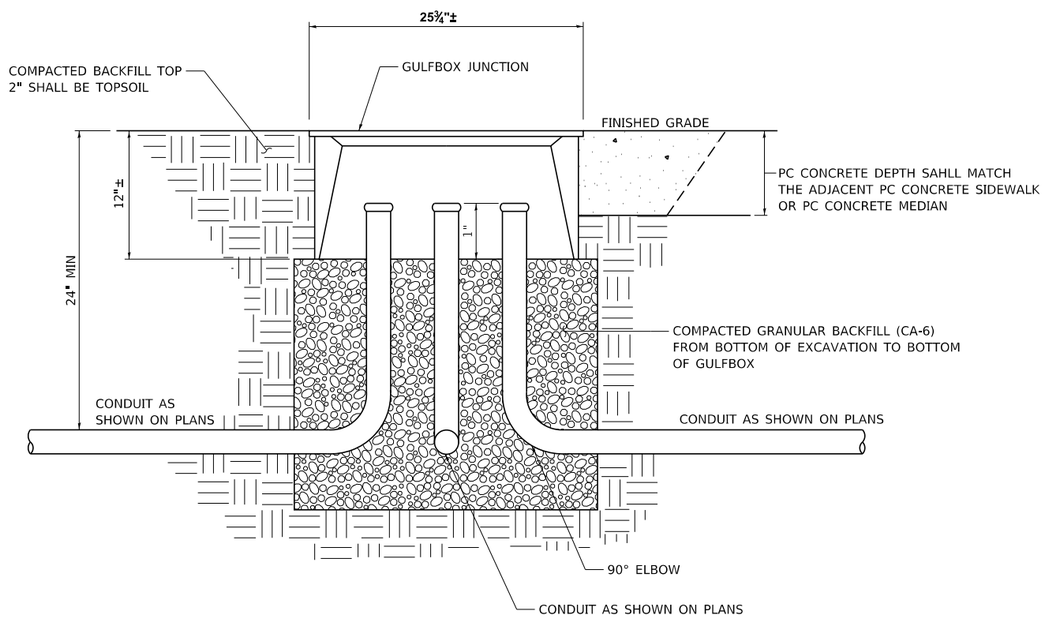

NOTES:

1. SEE GENERAL NOTES FOR ADDITIONAL GULFBOX SPECIFICATIONS.
2. DIMENSIONS SHOWN ARE FOR A NEWBASIS FCA132412T-00006 GULFBOX, SIMILAR UNITS WILL BE ALLOWED AS APPROVED BY THE ENGINEER.
3. CONDUITS ENTERING GULFBOX SHALL BE VERTICAL AND PLUMB. POSITION ALL CONDUITS NEAR THE CENTER OF THE GULFBOX.
4. THIS WORK SHALL BE PAID FOR AT THE CONTRACT UNIT PRICE EACH FOR GULFBOX JUNCTION, COMPOSITE CONCRETE, WHICH PRICE WILL BE PAYMENT IN FULL FOR ALL LABOR, EQUIPMENT AND MATERIALS TO FURNISH AND INSTALL THE GULFBOX.
5. CONDUIT AND WIRE SHOWN ON THE DETAILS IS DIAGRAMMATIC AND REPRESENTS THE TYPICAL SITUATION. CONTRACTOR TO VERIFY EXACT NUMBER OF CONDUITS, WIRES, AND SPLICES ENTERING AND LEAVING EACH GULFBOX AS SHOWN ON THE PLANS.

LOCHMUELLER GROUP
201 West Springfield Avenue, Suite 1012
Champaign, IL 61820
PHONE: 217.673.7633

USER NAME = Nick.Burrus	DESIGNED - NMN	REVISED -	
	DRAWN - WJS	REVISED -	
PLOT SCALE = 20.0000 ' / in.	CHECKED - TWK	REVISED -	
PLOT DATE = 10/1/2025	DATE -	REVISED -	

STATE OF ILLINOIS
DEPARTMENT OF TRANSPORTATION

LIGHTING DETAILS

SCALE: SHEET 3 OF 5 SHEETS STA. TO STA.

F.A.U. RTE.	SECTION	COUNTY	TOTAL SHEETS	SHEET NO.
7159	19-000314-00-PV	CHAMPAIGN	197	103

CONTRACT NO. 91642

ILLINOIS FED. AID PROJECT

MODEL: DET 03
FILE NAME: X:\Production\Files\2021\21-1003\Departments\TEP\Analysis\Lighting Design\Lighting Details.dgn

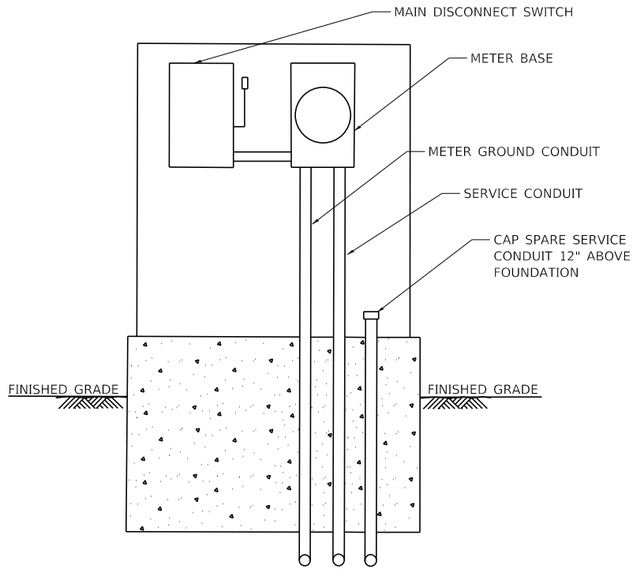

LIGHTING CONTROLLER (SPECIAL) ELEVATION (REAR VIEW)

SCALE: N.T.S.

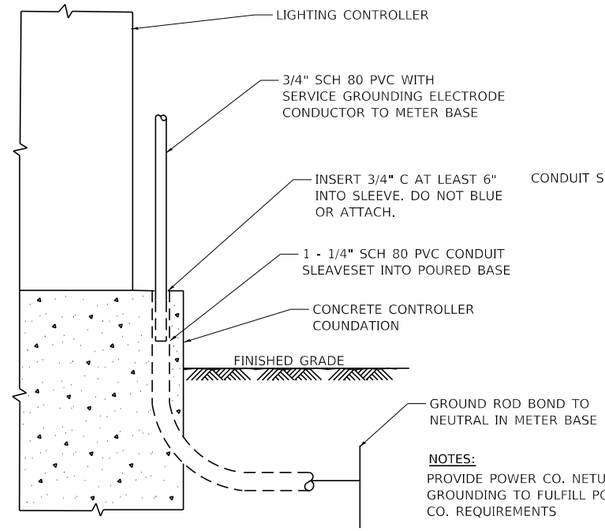

NOTES:

PROVIDE POWER CO. NETURAL GROUNDING TO FULFILL POWER CO. REQUIREMENTS

METER BASE GROUNDING DETAIL

SCALE: N.T.S.

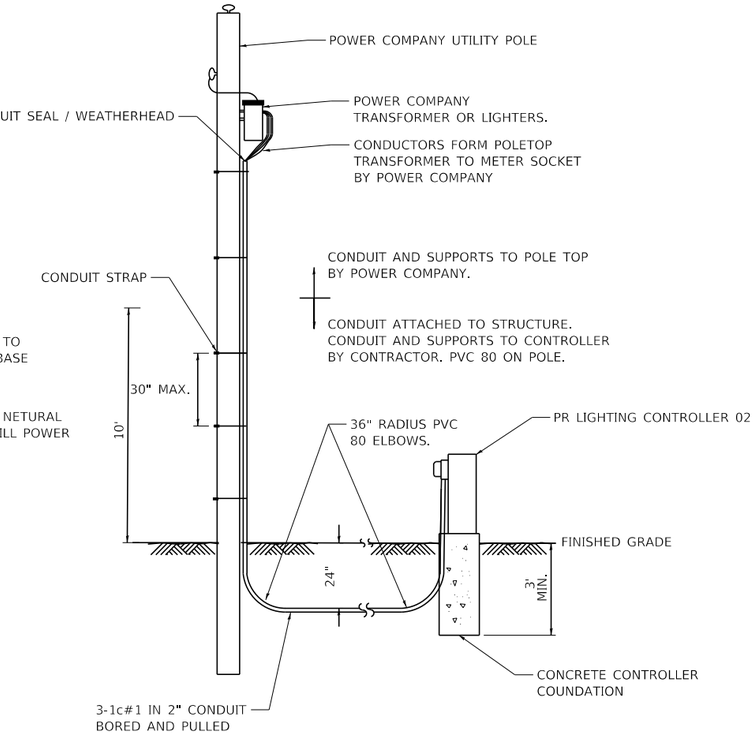

ELECTRIC SERVICE INSTALLATION DETAIL

SCALE: N.T.S.

NOTES:

1. ELECTRIC SERVICE SHALL BE 120/240V, SINGLE-PHASE, 100AMP UNDERGROUND ACCORDING TO STANDARD SPECIFICATION SECTION 804 AND AS DETAILED ON THE PLANS.
2. THE ELECTRICAL SERVICE SHALL COMPLY WITH THE NEC. THE REQUIREMENTS OF THE POWER COMPANY, AND THE CONTRACT DOCUMENTS. SHOULD A CONFLICT ARISE, THE CONTRACTOR SHALL CONTACT THE ENGINEER IMMEDIATELY FOR A RESOLUTION. THE CONTRACTOR SHALL PAY ALL COST AND FEES ASSOCIATED WITH PROVIDING THE ELECTRIC SERVICE, INCLUDING POWER COMPANY CHARGES.
3. THE CONTRACTOR SHALL INSTALL ALL EQUIPMENT, CABINETS, CONDUITS, CONDUCTORS, AND METERS THAT THE POWER COMPANY REQUIRES. COORDINATE ALL ASPECTS OF THE WORK WITH THE POWER COMPANY, INCLUDING RELOCATIONS OF SERVICE DROPS AND UTILITY POLES.
4. ALL SERVICE ENTRANCE CONDUITS SHALL BE AS NOTED ON THE DRAWINGS. INSTALL BURIED SERVICE CONDUITS AT-OR-BELOW NEC REQUIRED DEPTH OF BURY.
5. CONTRACTOR SHALL SUPPLY CONDUCTORS WITH SUFFICIENT SLACK FOR POWER COMPANY TERMINATION.

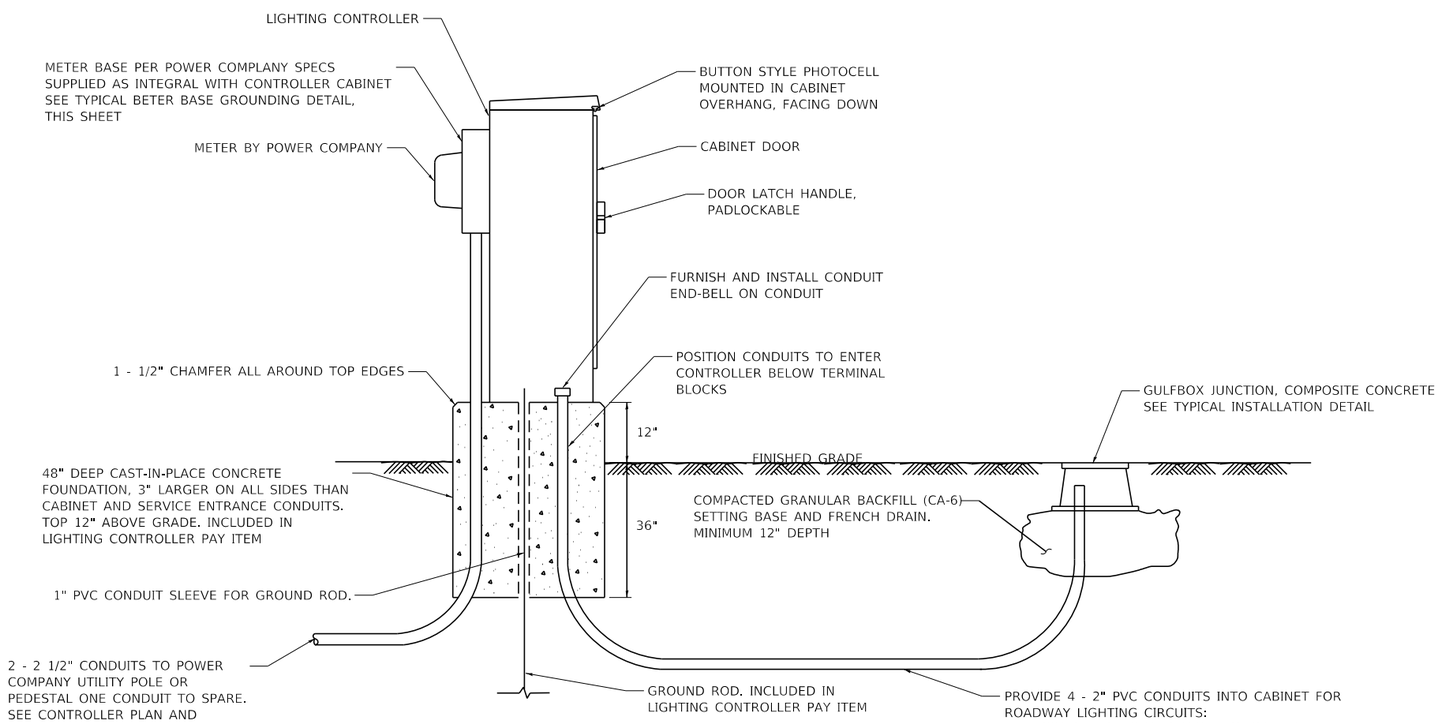

LIGHTING CONTROLLER (SPECIAL) ELEVATION (SIDE VIEW)

SCALE: N.T.S.

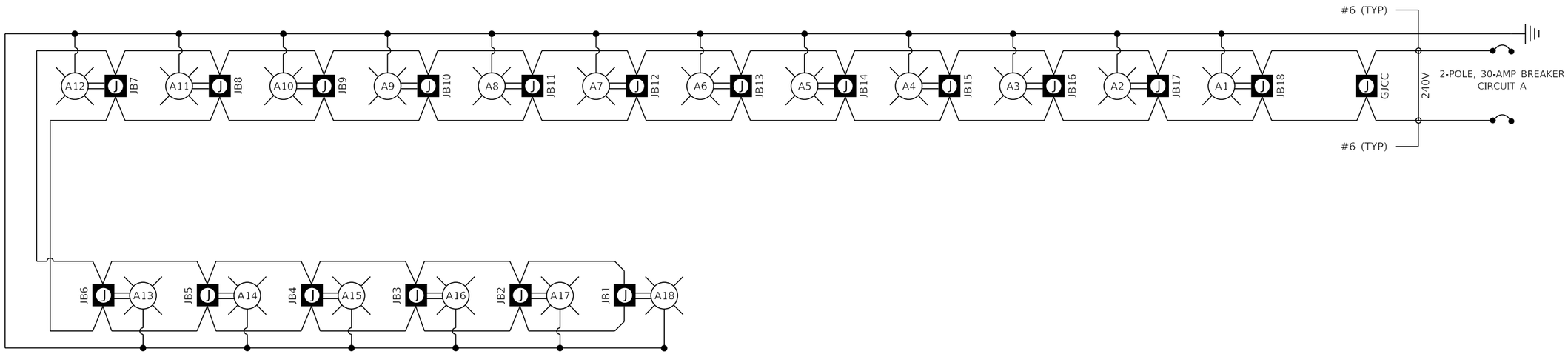

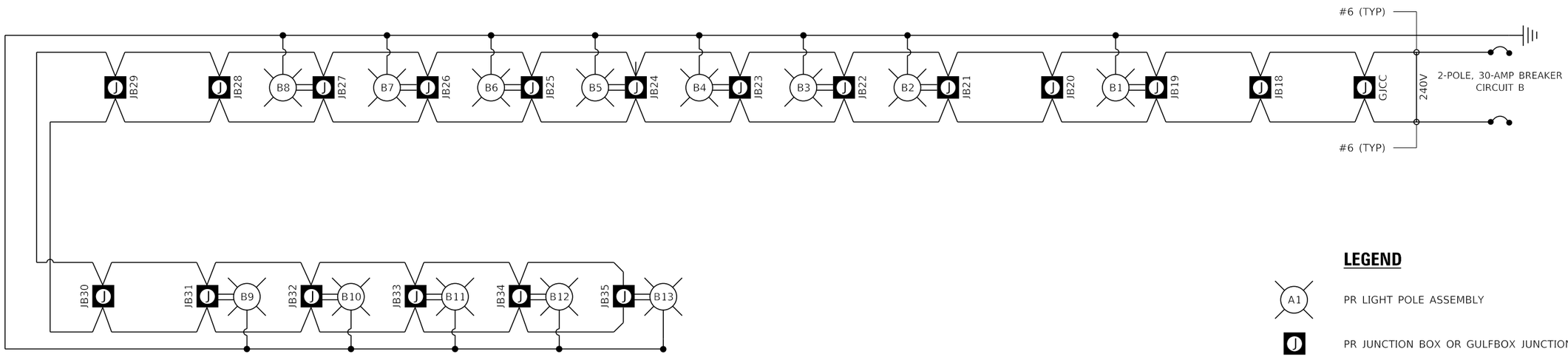

LEGEND

- A1 — PR LIGHT POLE ASSEMBLY
- PR JUNCTION BOX OR GULFBOX JUNCTION
- PR GROUND CONNECTION
- PR GROUND
- PR 2-POLE, 30-AMP BREAKER

MODEL: DET 05
FILE NAME: X:\Production\Files\2021\421-1003\Departments\TEP\Analysis\Lighting Design\Lighting Details.dgn

LOCHMUELLER GROUP
201 West Springfield Avenue, Suite 1012
Champaign, IL 61820
PHONE: 217.673.7633

USER NAME = Nick.Burrus	DESIGNED - NMN	REVISED -	
	DRAWN - WJS	REVISED -	
PLOT SCALE = 20.0000 ' / in.	CHECKED - TWK	REVISED -	
PLOT DATE = 10/1/2025	DATE -	REVISED -	

STATE OF ILLINOIS
DEPARTMENT OF TRANSPORTATION

LIGHTING DETAILS

SCALE: | SHEET 5 OF 5 SHEETS | STA. | TO STA.

F.A.U. RTE.	SECTION	COUNTY	TOTAL SHEETS	SHEET NO.
7159	19-000314-00-PV	CHAMPAIGN	197	105
		CONTRACT NO. 91642		
		ILLINOIS	FED. AID PROJECT	

GENERAL LANDSCAPE NOTES

1. REMOVE ALL CONSTRUCTION DEBRIS, ROCKS, ETC. FROM THE PLANTING BEDS BEFORE PLACING TOPSOIL AND PLANTING MIX AND PLANTING.
2. PREPARE PLANTING BEDS BY EXCAVATING SUBGRADE FILL 36" FOR TREES. BACKFILL PLANTING BEDS WITH SPECIFIED PLANTING MIX.
3. ALL PLANT MATERIALS SHALL BE GROWN BY A COMMERCIAL NURSERY AND MEET AMERICAN STANDARDS FOR NURSERY STOCK (ANSI) 7-60.1.
4. INSTALL ALL PLANT MATERIALS AND TREES PER ANSI 7-60.1.
5. STAKE TREES THAT FAIL TO REMAIN PLUMB.
6. MULCH ALL PLANTING BEDS WITH SPECIFIED COMPOSTED MULCH IN LOCATIONS SHOWN ON THE DRAWINGS.

PLANT SCHEDULE

QTY	CODE	BOTANICAL NAME COMMON NAME	SIZE	SPACING	ROOT
STREET TREES					
12	CB	Carpinus betulus European Hornbeam	2.5" Cal.	Per Plan	B&B
20	QC	Quercus robur x alba 'Crimschmidt' Crimson Spire™ Oak	2.5" Cal.	Per Plan	B&B
17	TD	Taxodium distichum 'Shawnee Brave' Shawnee Brave Bald Cypress	2.5" Cal.	Per Plan	B&B

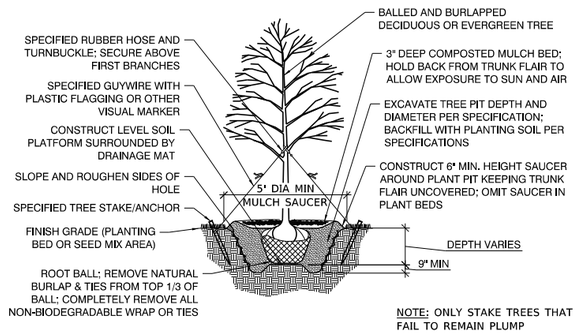

TREE PLANTING DETAIL - DECIDUOUS & EVERGREEN TREE

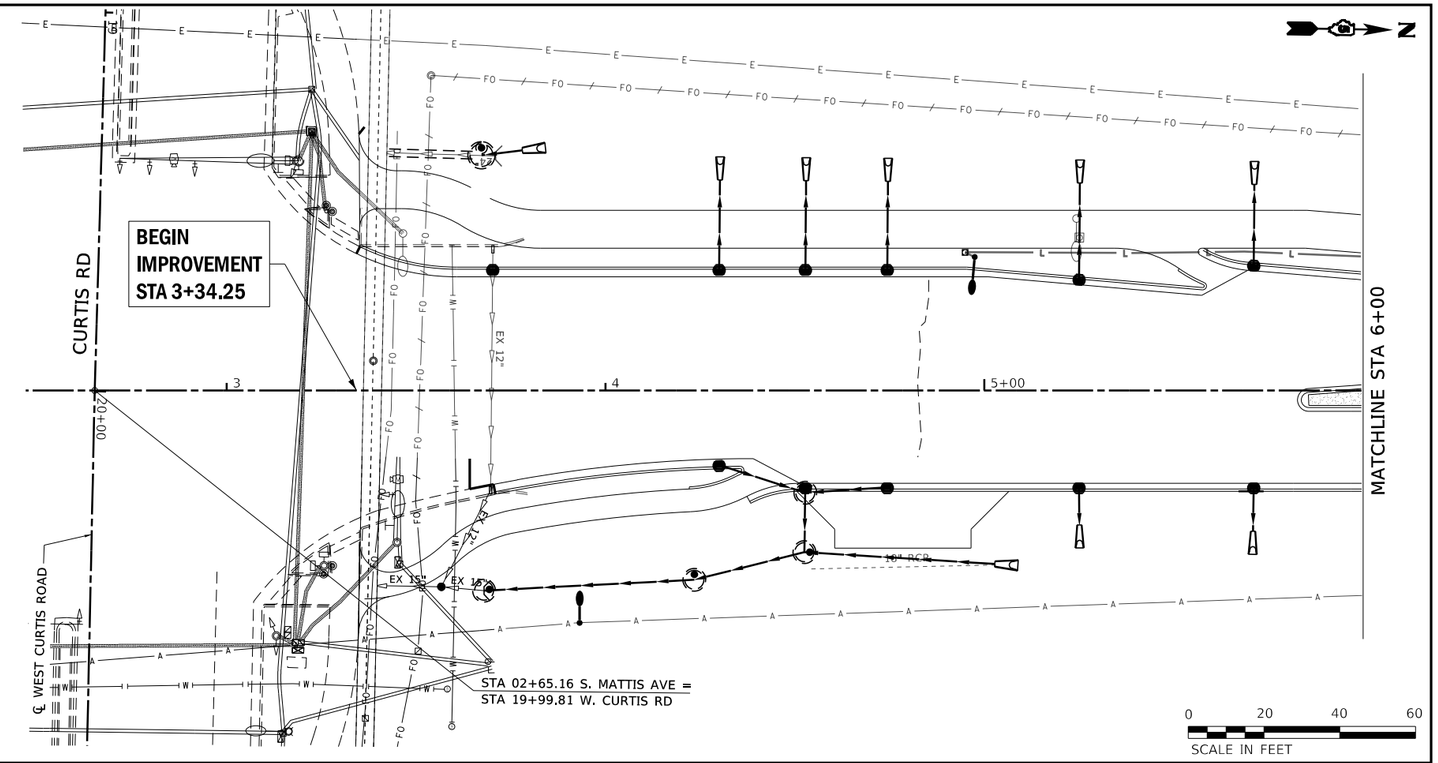

LEGEND

SYMBOL	DESCRIPTION
	STREET TREE (CB) Carpinus betulus / European Hornbeam (QC) Quercus robur x alba 'Crimschmidt' / Crimson Spire Oak (TD) Taxodium distichum 'Shawnee Brave' / Shawnee Brave Bald Cypress
	SOD
	MULCH BED

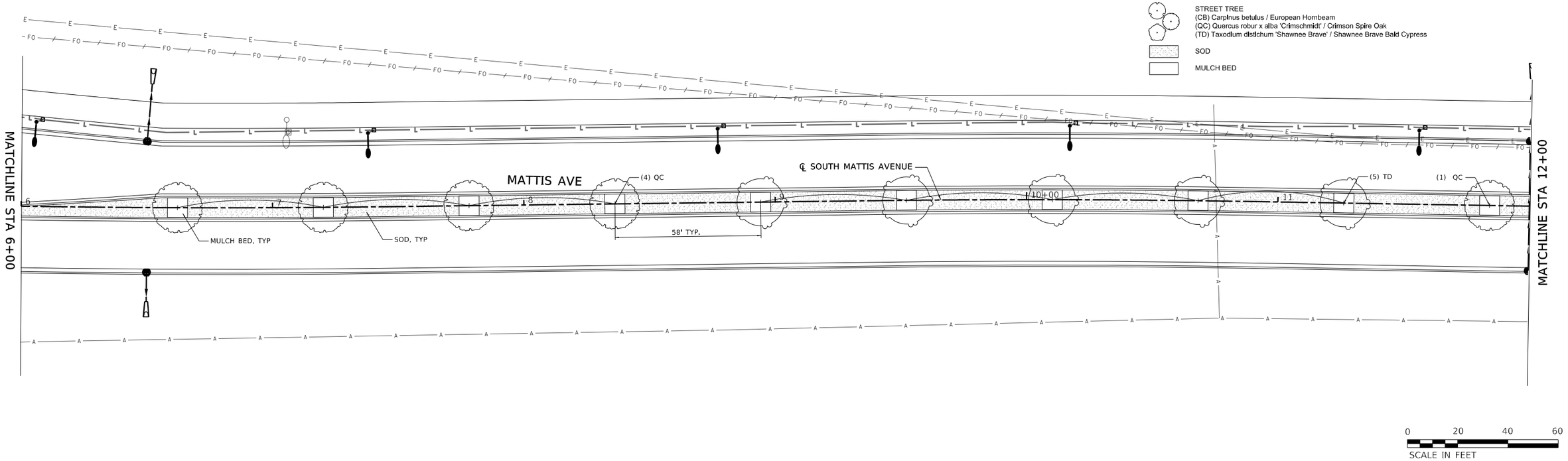

LOCHMUELLER GROUP
201 West Springfield Avenue, Suite 1012
Champaign, IL 61820
PHONE: 217.673.7633

USER NAME = Nick.Burrus	DESIGNED -	REVISED -
MODEL NAME = 01 LS	DRAWN -	REVISED -
PLOT SCALE = 40.0000 ' / in.	CHECKED -	REVISED -
PLOT DATE = 10/1/2025	DATE -	REVISED -

STATE OF ILLINOIS
DEPARTMENT OF TRANSPORTATION

SOUTH MATTIS AVENUE
LANDSCAPE PLAN

SCALE: 1"=20' | SHEET 1 OF 5 SHEETS | STA. STA 0+00.00 TO STA 12+00.00

F.A.U. RTE.	SECTION	COUNTY	TOTAL SHEETS	SHEET NO.
7159	19-000314-00-PV	CHAMPAIGN	197	106

CONTRACT NO. 91642

ILLINOIS | FED. AID PROJECT

MODEL: 01 LS
FILE NAME: X:\Production Files\2021\21-1003\CAD\CADD Sheets\21-1885 Mattis Ave - dlhLandscaping.dgn

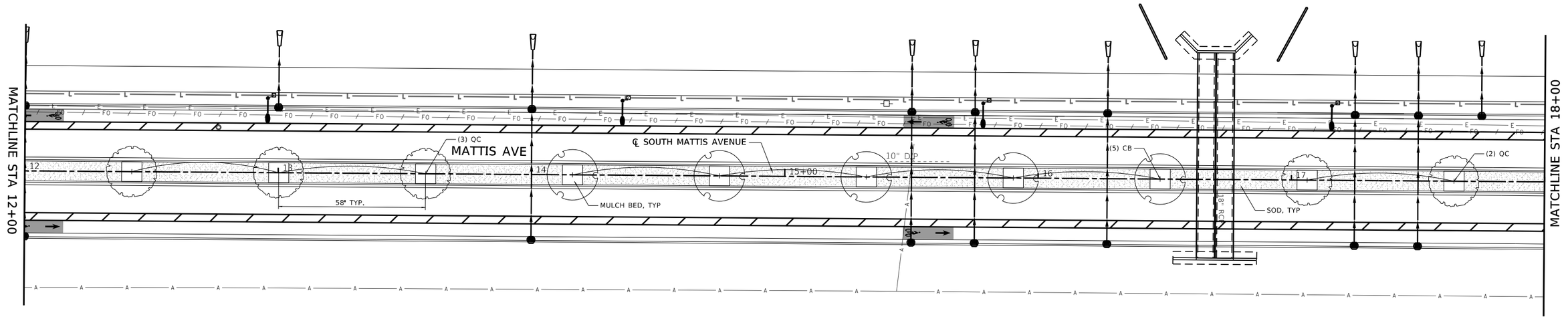

LEGEND

SYMBOL	DESCRIPTION
	STREET TREE (CB) Carpinus betulus / European Hornbeam (QC) Quercus robur x alba 'Crimschmidt' / Crimson Spire Oak (TD) Taxodium distichum 'Shawnee Brave' / Shawnee Brave Bald Cypress
	SOD
	MULCH BED

0 20 40 60
SCALE IN FEET

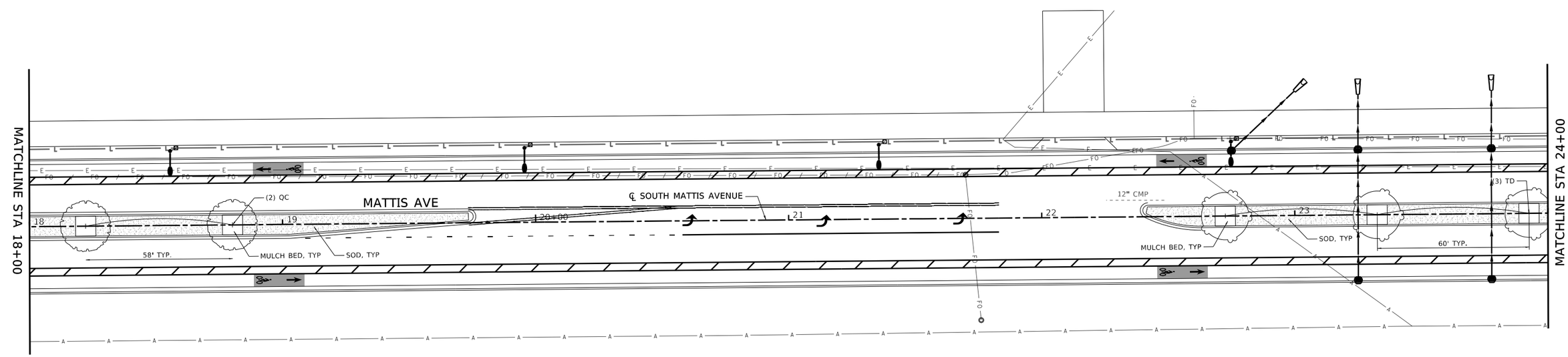

0 20 40 60
SCALE IN FEET

MODEL: 02 LS
FILE NAME: X:\Production Files\2021\21-1003\CADD\CADD Sheets\21-1885 Mattis Ave - dtlLandscaping.dgn

LOCHMUELLER GROUP
201 West Springfield Avenue, Suite 1012
Champaign, IL 61820
PHONE: 217.673.7633

USER NAME = Nick.Burrus	DESIGNED -	REVISED -	
MODEL NAME = 02 LS	DRAWN -	REVISED -	
PLOT SCALE = 40.0000 ' / in.	CHECKED -	REVISED -	
PLOT DATE = 10/1/2025	DATE -	REVISED -	

STATE OF ILLINOIS
DEPARTMENT OF TRANSPORTATION

SOUTH MATTIS AVENUE
LANDSCAPING PLAN

SCALE: 1"=20' | SHEET 2 OF 5 SHEETS | STA 12+00.00 TO STA 24+00.00

F.A.U. RTE.	SECTION	COUNTY	TOTAL SHEETS	SHEET NO.
7159	19-000314-00-PV	CHAMPAIGN	197	107
		CONTRACT NO. 91642		
		ILLINOIS	FED. AID PROJECT	

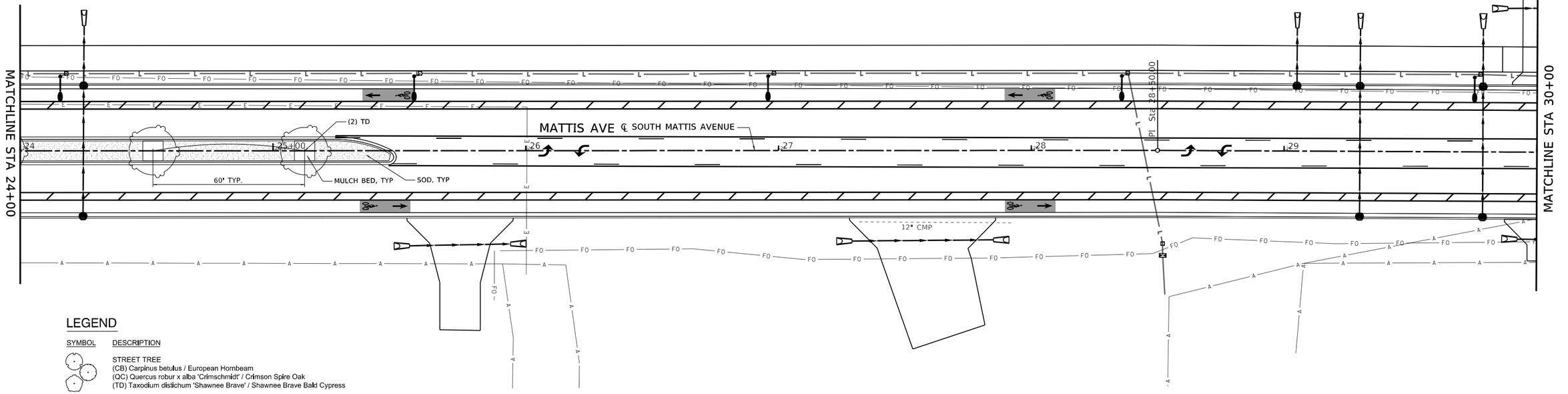

LEGEND

SYMBOL	DESCRIPTION
	STREET TREE (CB) Carpinus betulus / European Hornbeam (QC) Quercus robur x alba 'Crimschmidt' / Crimson Spire Oak (TD) Taxodium distichum 'Shawnee Brave' / Shawnee Brave Bald Cypress
	SOD
	MULCH BED

0 20 40 60
SCALE IN FEET

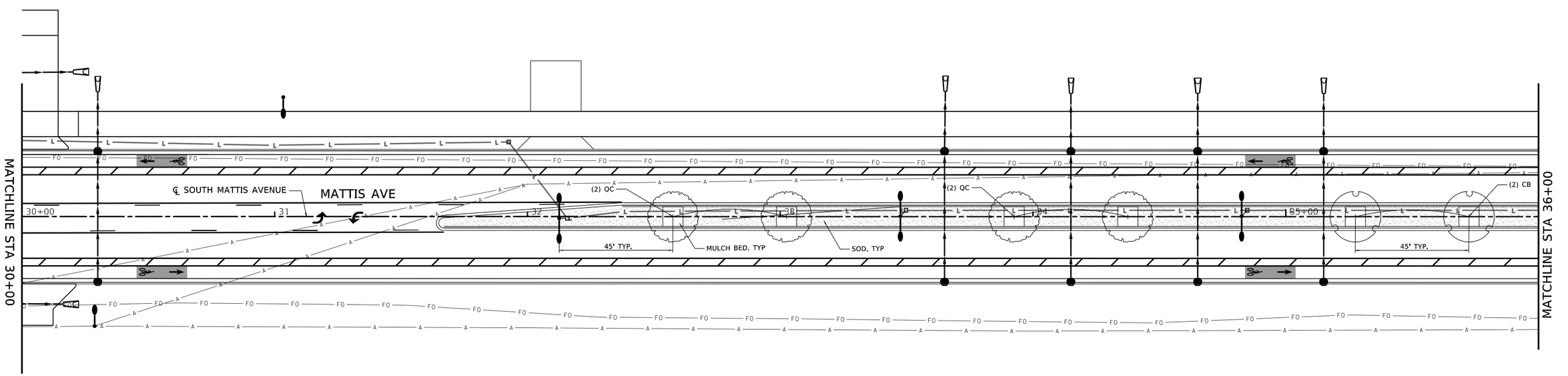

0 20 40 60
SCALE IN FEET

MODEL: 03 LS
FILE NAME: X:\Production Files\2021\21-1003\CADD\CADD Sheets\21-1885 Mattis Ave - 4thLandscaping.dgn

LOCHMUELLER GROUP
201 West Springfield Avenue, Suite 1012
Champaign, IL 61820
PHONE: 217.673.7633

USER NAME = Nick.Burrus	DESIGNED -	REVISED -
MODEL NAME = 03 LS	DRAWN -	REVISED -
PLOT SCALE = 40.0000 ' / in.	CHECKED -	REVISED -
PLOT DATE = 10/1/2025	DATE -	REVISED -

STATE OF ILLINOIS
DEPARTMENT OF TRANSPORTATION

SOUTH MATTIS AVENUE
LANDSCAPING PLAN

SCALE: 1"=20' | SHEET 3 OF 5 SHEETS | STA STA 24+00.00 TO STA 36+00.00

F.A.U. RTE.	SECTION	COUNTY	TOTAL SHEETS	SHEET NO.
7159	19-000314-00-PV	CHAMPAIGN	197	108
		CONTRACT NO. 91642		
		ILLINOIS	FED. AID PROJECT	

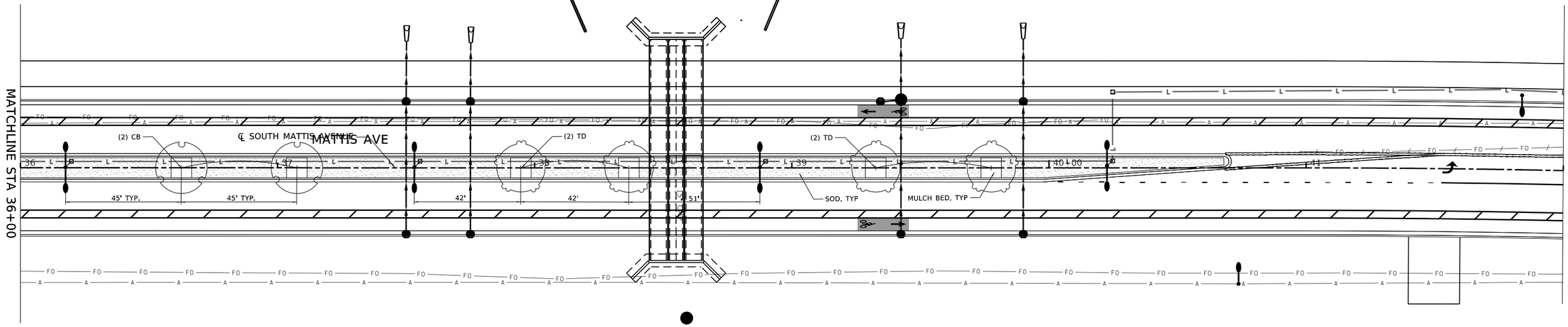

LEGEND

SYMBOL	DESCRIPTION
	STREET TREE (CB) Carpinus betulus / European Hornbeam (QC) Quercus robur x alba 'Crimschmidt' / Crimson Spire Oak (TD) Taxodium distichum 'Shawnee Brave' / Shawnee Brave Bald Cypress
	SOD
	MULCH BED

0 20 40 60
SCALE IN FEET

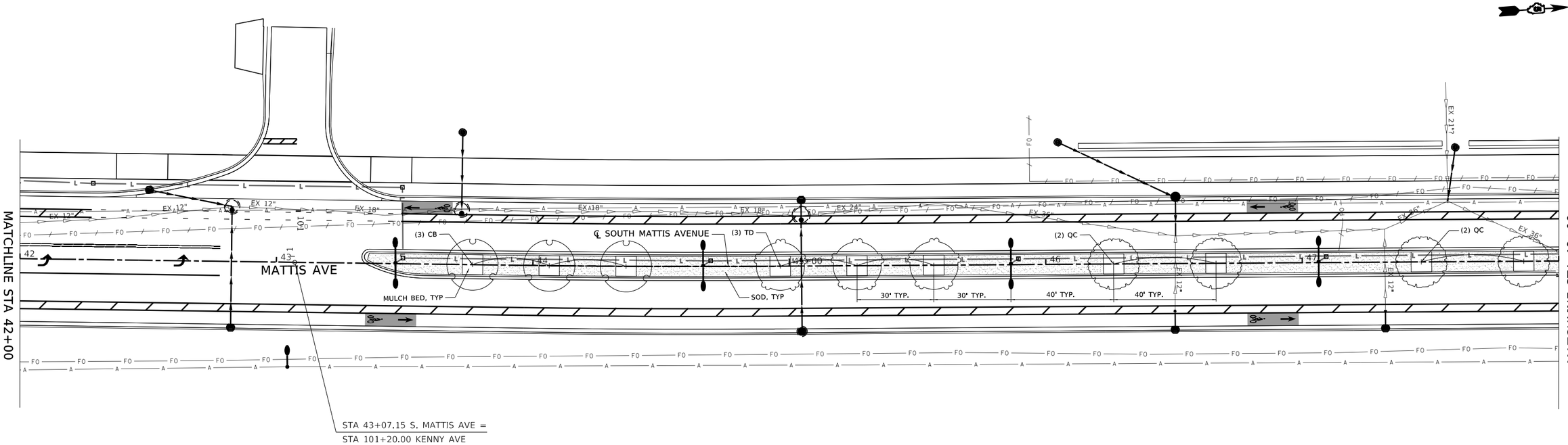

0 20 40 60
SCALE IN FEET

MODEL: 04 LS
FILE NAME: X:\Production Files\2021\21-1003\CADD\CADD Sheets\21-1885 Mattis Ave - dbLandscaping.dgn

LOCHMUELLER GROUP
201 West Springfield Avenue, Suite 1012
Champaign, IL 61820
PHONE: 217.673.7633

USER NAME = Nick.Burrus	DESIGNED -	REVISED -
MODEL NAME = 04 LS	DRAWN -	REVISED -
PLOT SCALE = 40.0000 ' / in.	CHECKED -	REVISED -
PLOT DATE = 10/1/2025	DATE -	REVISED -

STATE OF ILLINOIS
DEPARTMENT OF TRANSPORTATION

SOUTH MATTIS AVENUE
LANDSCAPING PLAN

SCALE: 1"=20' | SHEET 4 OF 5 SHEETS | STA STA 36+00.00 TO STA 48+00.00

F.A.U. RTE.	SECTION	COUNTY	TOTAL SHEETS	SHEET NO.
7159	19-000314-00-PV	CHAMPAIGN	197	109
		CONTRACT NO. 91642		
		ILLINOIS	FED. AID PROJECT	

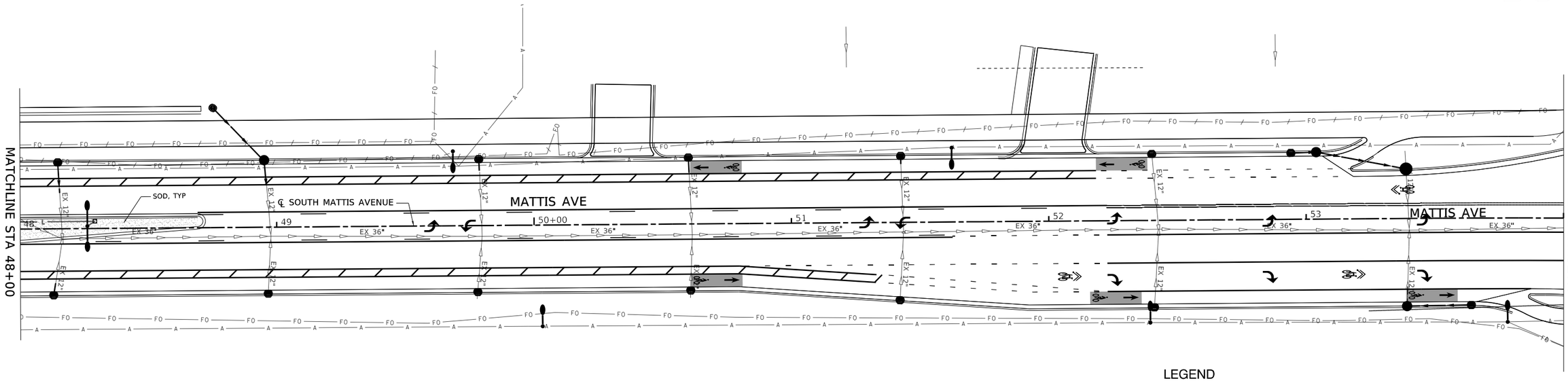

LEGEND

SYMBOL	DESCRIPTION
	STREET TREE (CB) Carpinus betulus / European Hornbeam (QC) Quercus robur x alba 'Crimschmidt' / Crimson Spire Oak (TD) Taxodium distichum 'Shawnee Brave' / Shawnee Brave Bald Cypress
	SOD
	MULCH BED

0 20 40 60
SCALE IN FEET

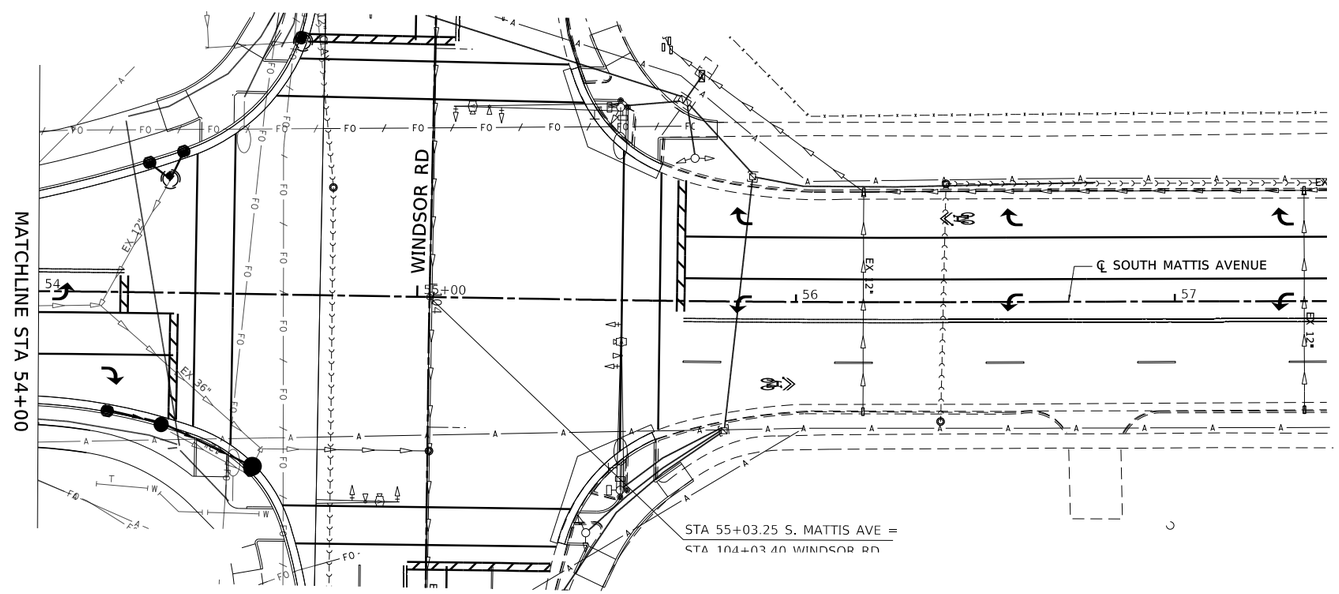

LANDSCAPING							
		25200110	A2002504	A2064012	A2007720	K0036118	X1800003
START STA	END STA	SODDING, SALT TOLERANT	TREE, CARPINUS BETULUS, (EUROPEAN HORNBEAM) 2" CALIPER, BALLED AND BURLAPPED	TREE, QUERCUS ALBA X ROBUR CRIMSCHMIDT (CRIMSON SPIRE OAK), 2-1/2" CALIPER, BALLED AND BURLAPPED	TREE, TAXODIUM DISTICHUM SHAWNEE BRAVE (SHAWNEE BRAVE BALD CYPRESS), 2-1/2" CALIPER, BALLED AND BURLAPPED	MULCH PLACEMENT 3"	PLANTING SOIL MIX FURNISH AND PLACE
		SQ YD	EACH	EACH	EACH	SQ YD	CU YD
SOUTH MATTIS AVENUE							
5+85.65	19+73.51	1,016.23	5.00	5.00	12.00	156.44	156.44
22+41.19	25+46.52	393.61		5.00		35.56	35.56
31+66.90	40+67.95	661.79	4.00	4.00	4.00	85.33	85.33
43+35.52	48+69.31	371.22	3.00	3.00	4.00	71.11	71.11
TOTAL:		2,442.85	12.0	17.0	20.0	348.44	348.44
USE:		2,443	12	17	20	348	348

0 20 40 60
SCALE IN FEET

MODEL: 05 LS
FILE NAME: X:\Production Files\2021\21-1003\CADD\CADD Sheets\21-1885 Mattis Ave - ahLandscaping.dgn

LOCHMUELLER GROUP
201 West Springfield Avenue, Suite 1012
Champaign, IL 61820
PHONE: 217.673.7633

USER NAME = Nick.Burrus	DESIGNED -	REVISED -
MODEL NAME = 05 LS	DRAWN -	REVISED -
PLOT SCALE = 40.0000 ' / in.	CHECKED -	REVISED -
PLOT DATE = 10/1/2025	DATE -	REVISED -

STATE OF ILLINOIS
DEPARTMENT OF TRANSPORTATION

SOUTH MATTIS AVENUE
LANDSCAPING PLAN

SCALE: 1"=20' | SHEET 5 OF 5 SHEETS | STA STA 48+00.00 TO STA 60+00.00

F.A.U. RTE.	SECTION	COUNTY	TOTAL SHEETS	SHEET NO.
7159	19-000314-00-PV	CHAMPAIGN	197	110
		CONTRACT NO. 91642		
		ILLINOIS FED. AID PROJECT		

LEGEND

	SAWED CONTRACTION JOINT PER STD. 420001
	SAWED LONGITUDINAL JOINT PER STD. 420001
XXX.XX	PROPOSED SURFACE ELEVATION

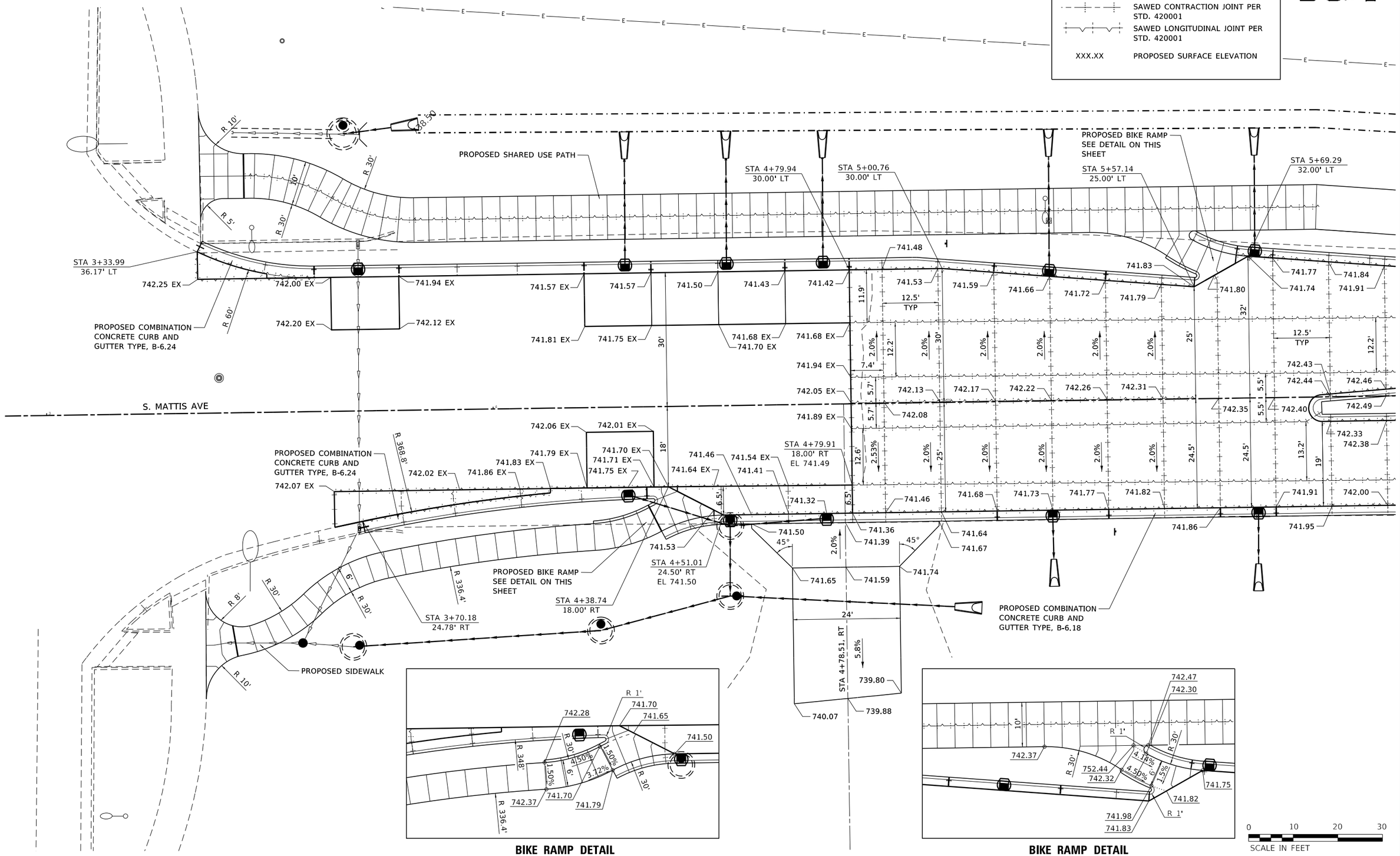

BIKE RAMP DETAIL

BIKE RAMP DETAIL

LOCHMUELLER GROUP 201 West Springfield Avenue, Suite 1012 Champaign, IL 61820 PHONE: 217.623.7633	USER NAME = Nick.Burrus	DESIGNED -	REVISED -
		DRAWN -	REVISED -
	PLOT SCALE = 20.0000 ' / in.	CHECKED -	REVISED -
	PLOT DATE = 10/1/2025	DATE -	REVISED -

STATE OF ILLINOIS
DEPARTMENT OF TRANSPORTATION

INTERSECTION AND JOINTING DETAIL
SOUTH MATTIS AVENUE AT CURTIS AVENUE

SCALE: 1"=10' | SHEET 1 OF 3 SHEETS | STA. | INT DETT CURTIS

F.A.U. RTE.	SECTION	COUNTY	TOTAL SHEETS	SHEET NO.
7159	19-000314-00-PV	CHAMPAIGN	197	111
		CONTRACT NO. 91642		
		ILLINOIS FED. AID PROJECT		

MODEL: 03 INT DET CURTIS
FILE NAME: X:\Production\Files\2021421-1003\CAD\CADD Sheets\21-1885 Mattis Ave - SH-Intersection Details.dgn

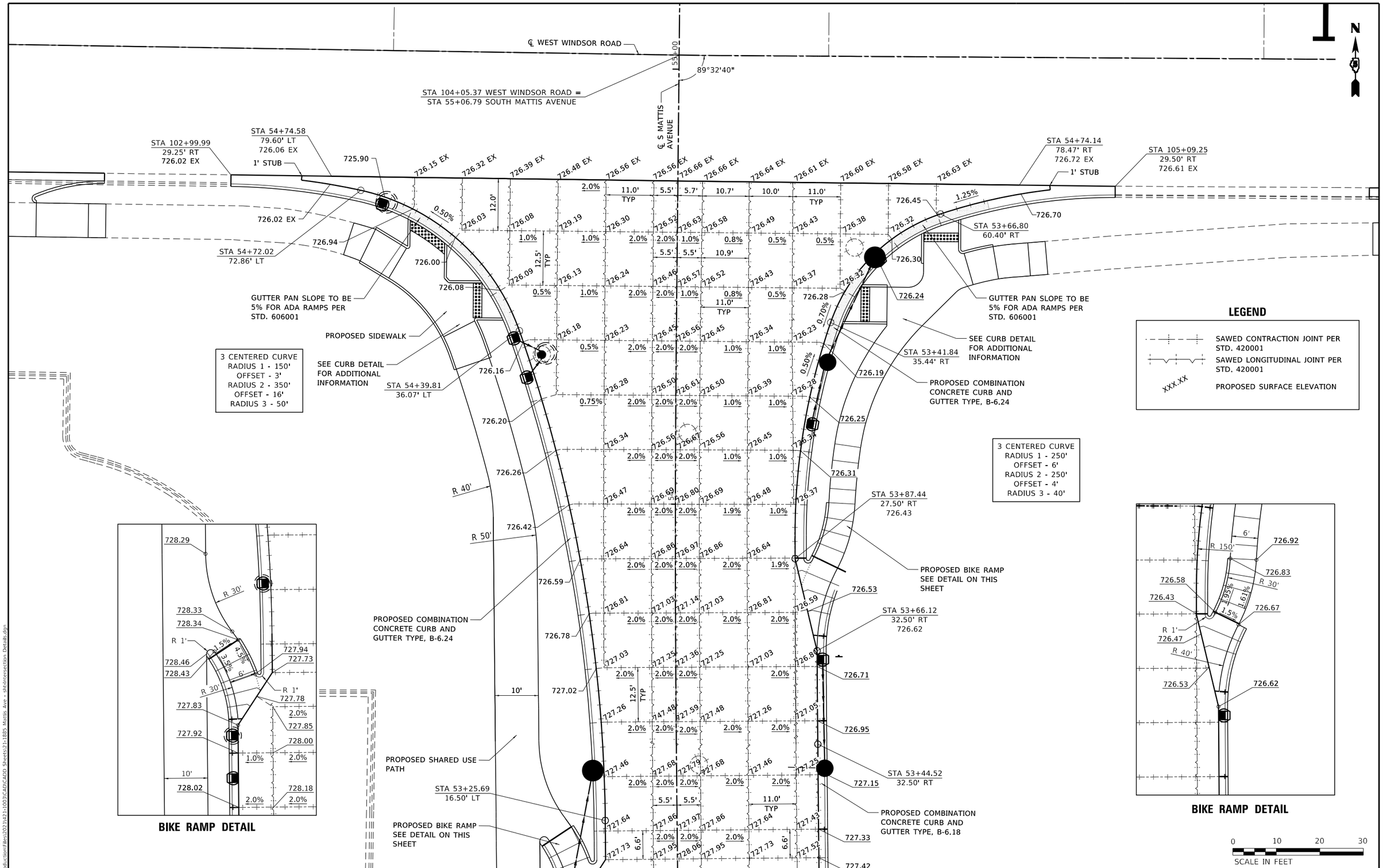

MODEL: 02 INT DET WINDSOR
FILE NAME: X:\Production\Files\2021\421-1003\CADD\CADD Sheets\21-1885 Mattis Ave - sht-Intersection Details.dgn

LOCHMUELLER GROUP
201 West Springfield Avenue, Suite 1012
Champaign, IL 61820
PHONE: 217.673.7633

USER NAME = Nick.Burrus	DESIGNED -	REVISED -
	DRAWN -	REVISED -
PLOT SCALE = 20.0000 ' / in.	CHECKED -	REVISED -
PLOT DATE = 10/1/2025	DATE -	REVISED -

STATE OF ILLINOIS
DEPARTMENT OF TRANSPORTATION

INTERSECTION AND JOINTING DETAIL
SOUTH MATTIS AVENUE AND WEST WINDSOR ROAD

SCALE: 1"=10' | SHEET 2 OF 3 SHEETS | INT DET WINDSOR

F.A.U. RTE.	SECTION	COUNTY	TOTAL SHEETS	SHEET NO.
7159	19-000314-00-PV	CHAMPAIGN	197	112
		CONTRACT NO. 91642		
		ILLINOIS	FED. AID PROJECT	

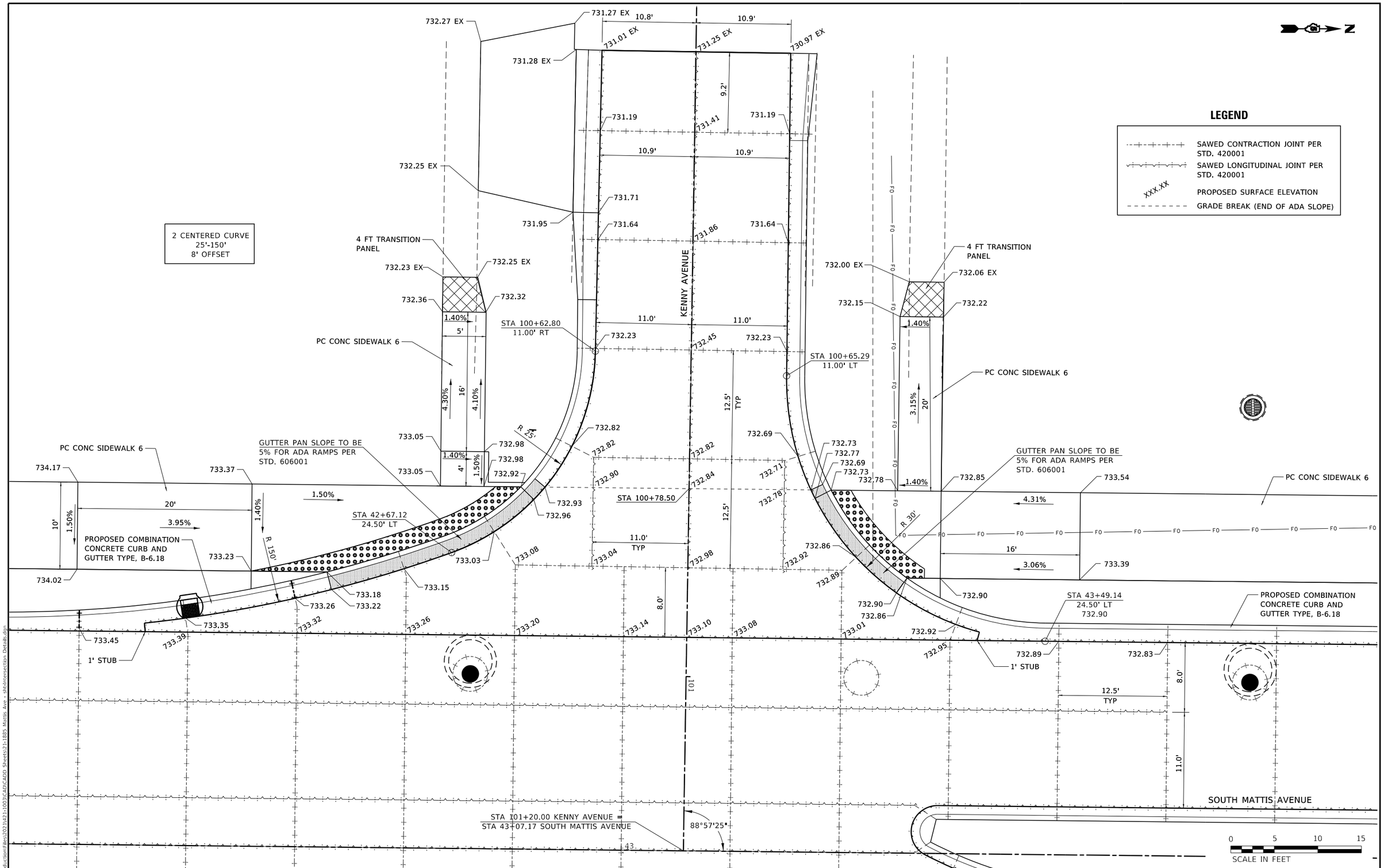

LOCHMUELLER GROUP 201 West Springfield Avenue, Suite 1012 Champaign, IL 61820 PHONE: 217.673.7633	USER NAME = Nick.Burrus	DESIGNED -	REVISED -	STATE OF ILLINOIS DEPARTMENT OF TRANSPORTATION	INTERSECTION AND JOINTING DETAIL SOUTH MATTIS AVENUE AND KENNY AVENUE	F.A.U. RTE. 7159	SECTION 19-000314-00-PV
		DRAWN -	REVISED -			COUNTY CHAMPAIGN	TOTAL SHEETS 197 / SHEET NO. 113
	PLOT SCALE = 10.0000 ' / in.	CHECKED -	REVISED -			CONTRACT NO. 91642	
	PLOT DATE = 10/1/2025	DATE -	REVISED -		SCALE: 1"=5' SHEET 3 OF 3 SHEETS INT DET KENNY	ILLINOIS FED. AID PROJECT	

MODEL: 01 INT DET KENNY
FILE NAME: X:\Production\Files\2021\471-1003\CADD\CADD Sheets\21-1885 Mattis Ave - sht-Intersection Details.dgn

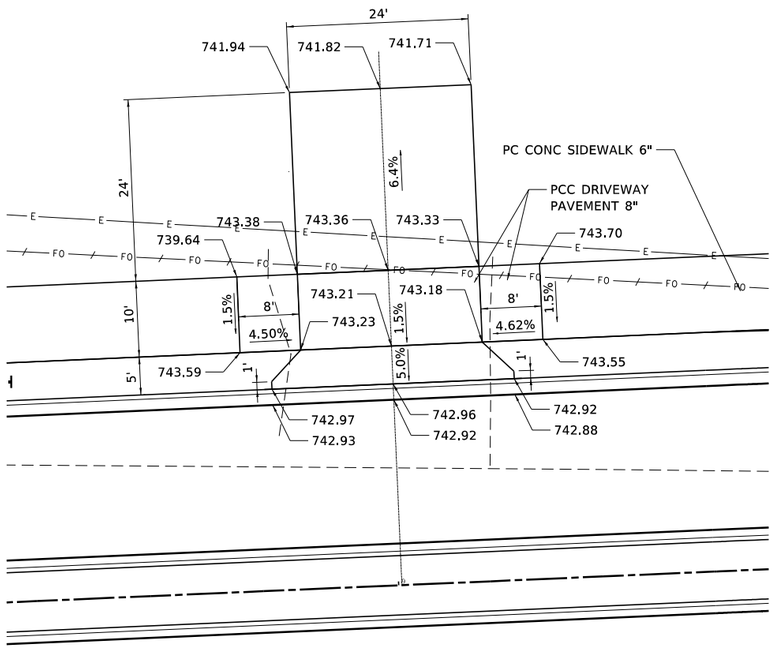

ENTRANCE STA 9+00.42, LT
FE, AGGREGATE

0 10 20 30
SCALE IN FEET

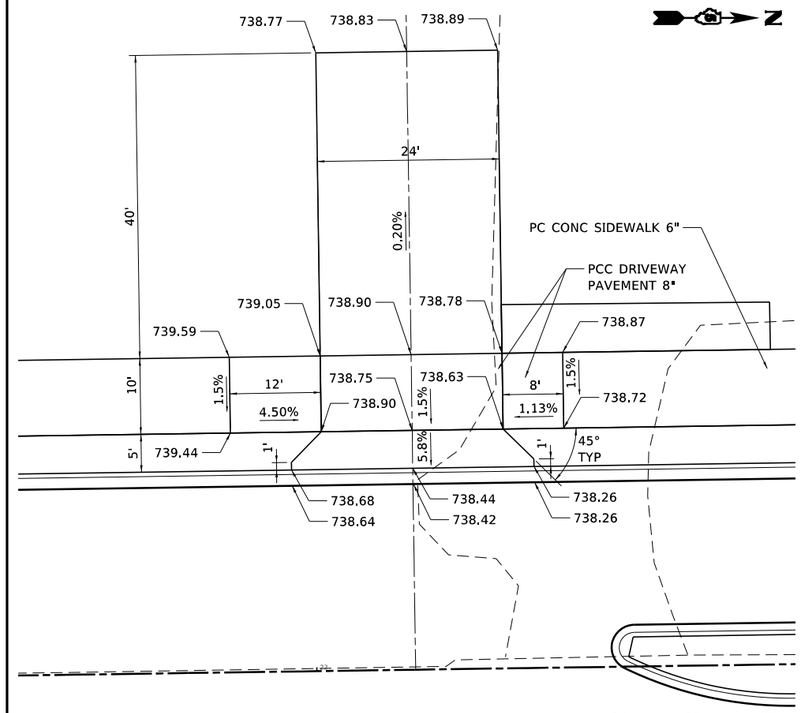

ENTRANCE STA 22+13.04, LT
CE, AGGREGATE

0 10 20 30
SCALE IN FEET

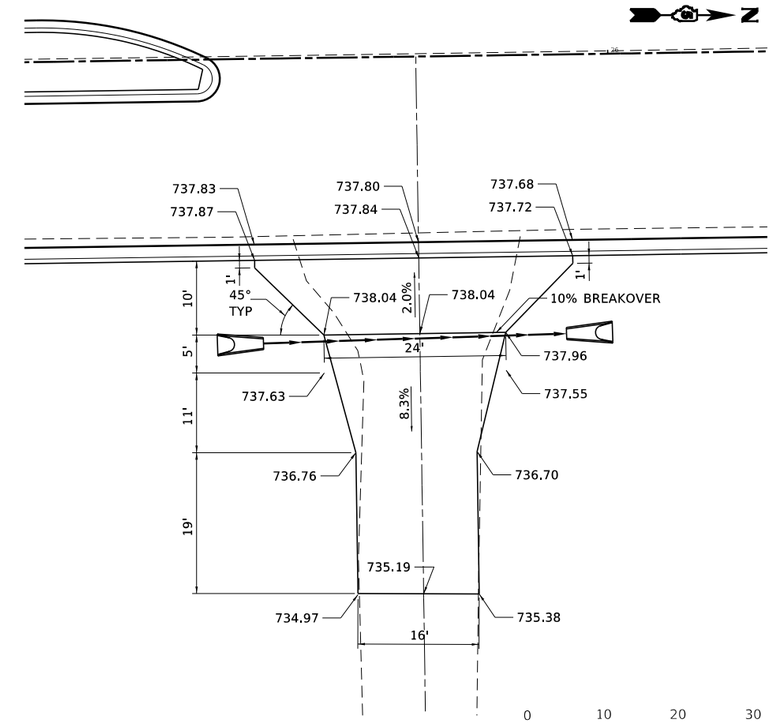

ENTRANCE STA 25+74.66, RT
CE, AGGREGATE

0 10 20 30
SCALE IN FEET

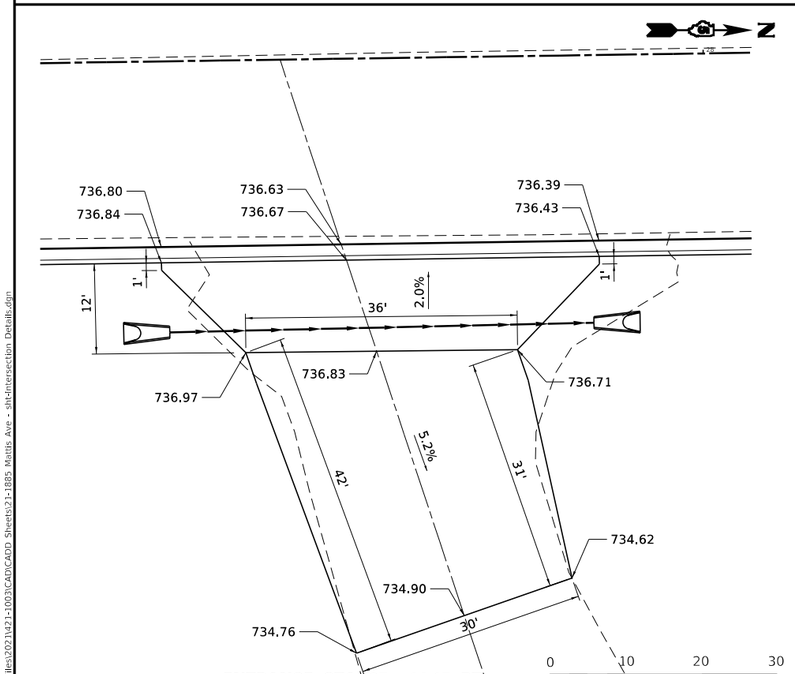

ENTRANCE STA 27+44.15, RT
PE, AGGREGATE

0 10 20 30
SCALE IN FEET

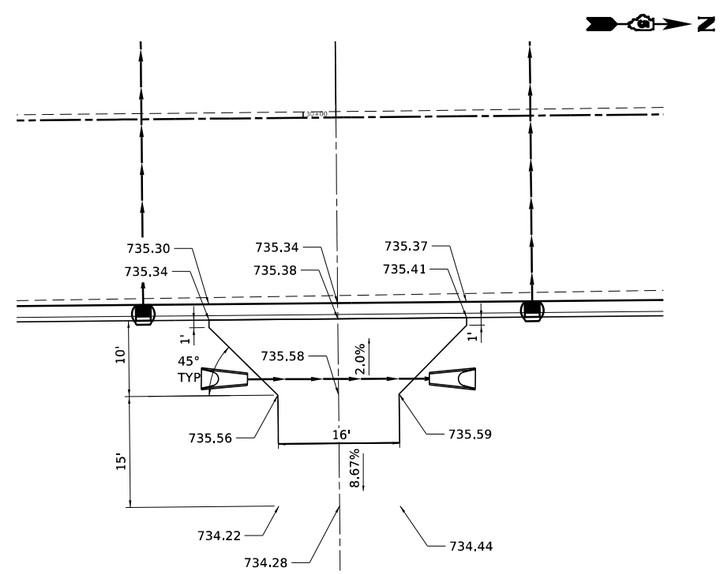

ENTRANCE STA 30+04.33, RT
PE, AGGREGATE

0 10 20 30
SCALE IN FEET

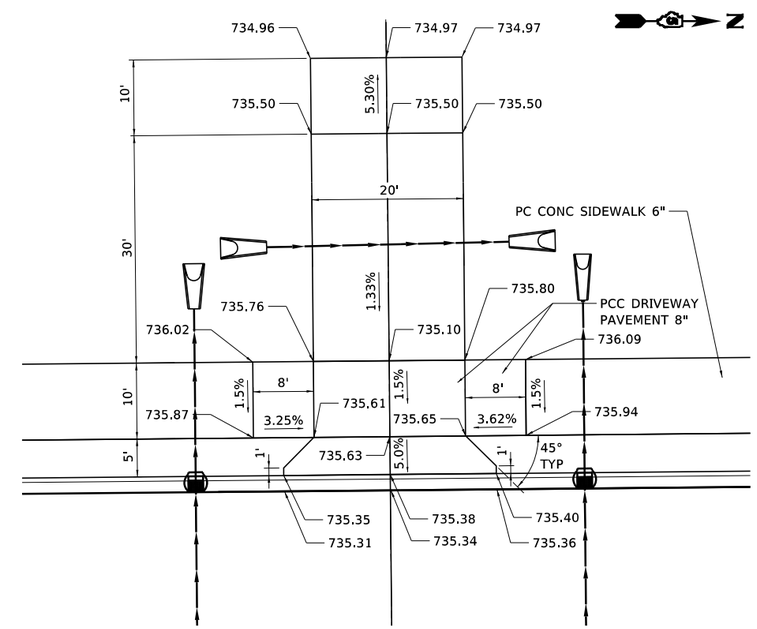

ENTRANCE STA 30+04.33, LT
FE, AGGREGATE

0 10 20 30
SCALE IN FEET

MODEL: Entrance Details_01
FILE NAME: X:\Production\Files\20210423-1003\CADD\CADD Sheets\21-1885 Mattis Ave - at Intersection Details.dgn

LOCHMUELLER GROUP
201 West Springfield Avenue, Suite 1012
Champaign, IL 61820
PHONE: 217.673.7633

USER NAME = Nick.Burrus	DESIGNED -	REVISED -
	DRAWN -	REVISED -
PLOT SCALE = 20.0000 ' / in.	CHECKED -	REVISED -
PLOT DATE = 10/1/2025	DATE -	REVISED -

STATE OF ILLINOIS
DEPARTMENT OF TRANSPORTATION

ENTRANCE DETAILS
SOUTH MATTIS AVENUE

SCALE: 1"=10' | SHEET 1 OF 2 SHEETS | STA. ENTRANCE 01

F.A.U. RTE.	SECTION	COUNTY	TOTAL SHEETS	SHEET NO.
7159	19-000314-00-PV	CHAMPAIGN	197	114
		CONTRACT NO. 91642		
		ILLINOIS FED. AID PROJECT		

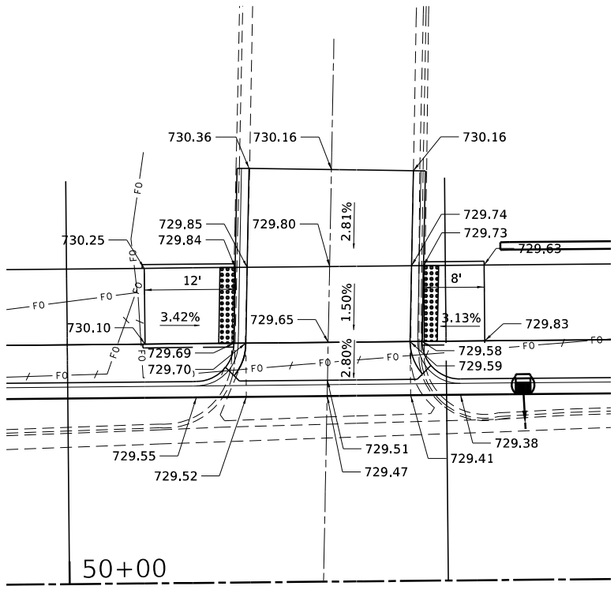

ENTRANCE STA 50+33.52, LT

0 10 20 30
SCALE IN FEET

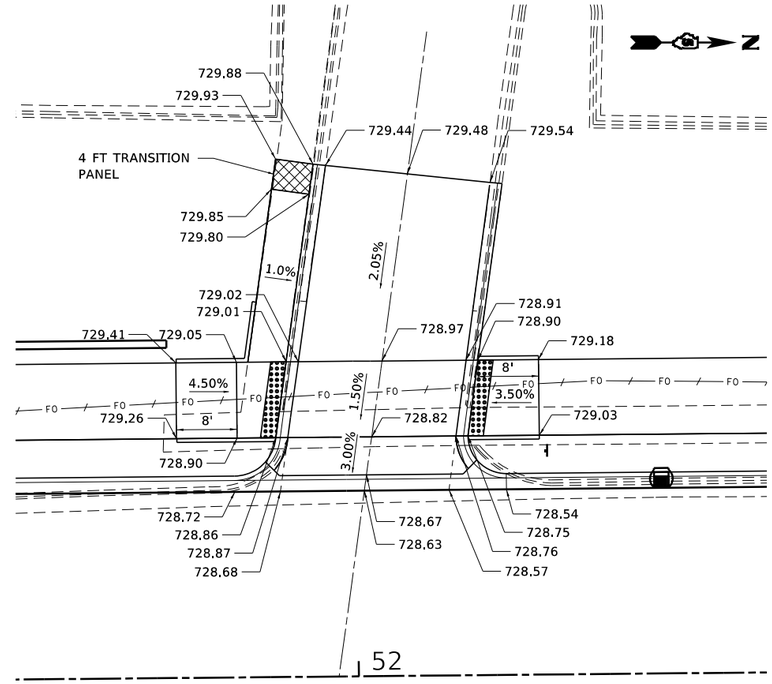

ENTRANCE STA 51+97.38, LT

0 10 20 30
SCALE IN FEET

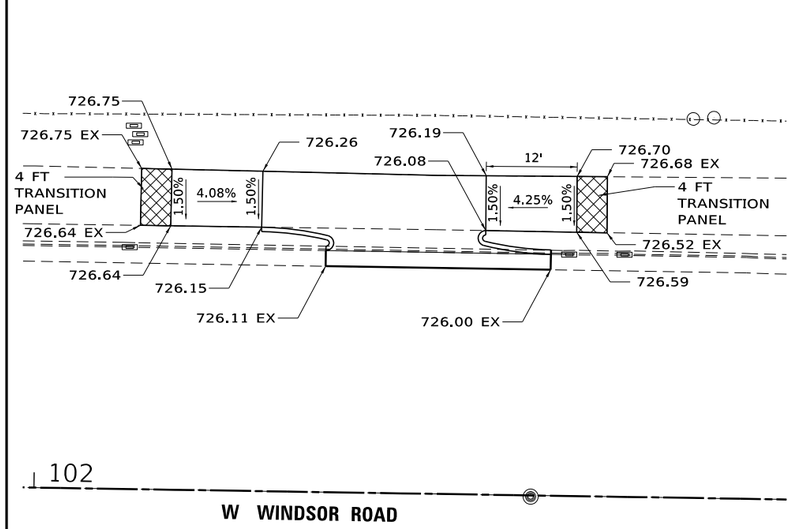

BICYCLE RAMP STA 102+50, LT

0 10 20 30
SCALE IN FEET

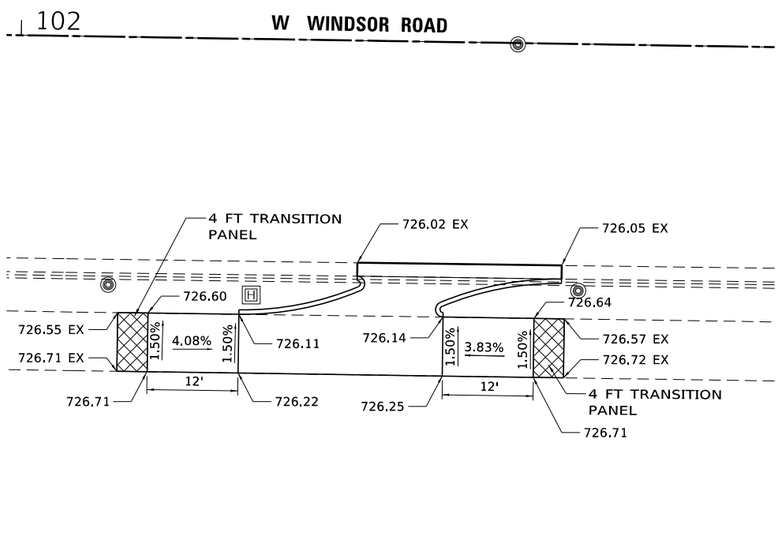

BICYCLE RAMP STA 102+50, RT

0 10 20 30
SCALE IN FEET

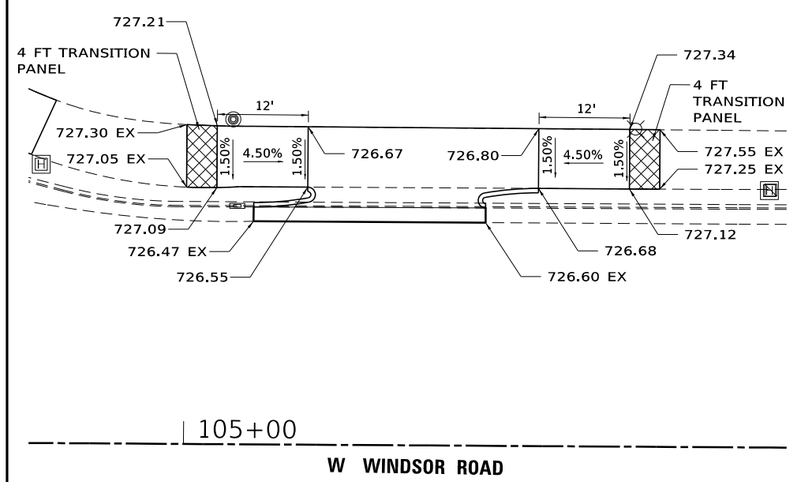

BICYCLE RAMP STA 105+25, LT

0 10 20 30
SCALE IN FEET

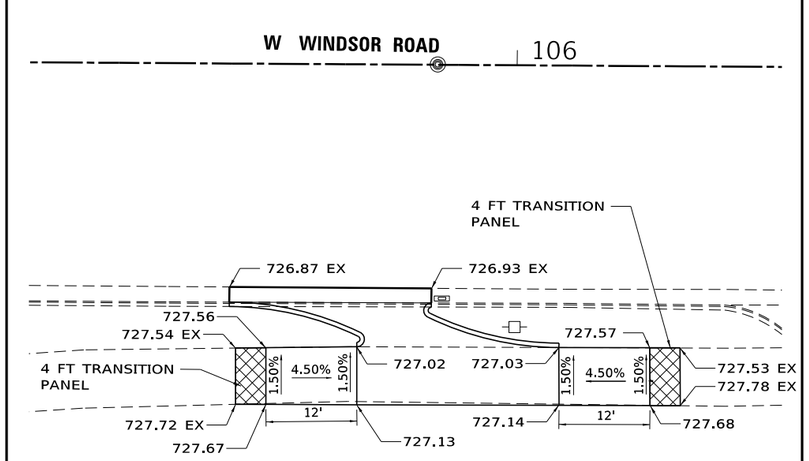

BICYCLE RAMP STA 105+80, RT

0 10 20 30
SCALE IN FEET

MODEL: Entrance Details_02
FILE NAME: X:\Production\Files\2021\421-1003\CADD\CADD Sheets\21-1885 Mattis Ave - @Intersection Details.dgn

LOCHMUELLER GROUP
201 West Springfield Avenue, Suite 1012
Champaign, IL 61820
PHONE: 217.673.7633

USER NAME = Nick.Burrus	DESIGNED -	REVISED -
	DRAWN -	REVISED -
PLOT SCALE = 20.0000 ' / in.	CHECKED -	REVISED -
PLOT DATE = 10/1/2025	DATE -	REVISED -

STATE OF ILLINOIS
DEPARTMENT OF TRANSPORTATION

ENTRANCE DETAILS AND BIKE RAMP DETAILS
SOUTH MATTIS AVENUE AND WINDSOR ROAD

SCALE: 1"=10' | SHEET 2 OF 2 SHEETS | STA. ENTRANCES_02

F.A.U. RTE.	SECTION	COUNTY	TOTAL SHEETS	SHEET NO.
7159	19-000314-00-PV	CHAMPAIGN	197	115
		CONTRACT NO. 91642		
		ILLINOIS FED. AID PROJECT		

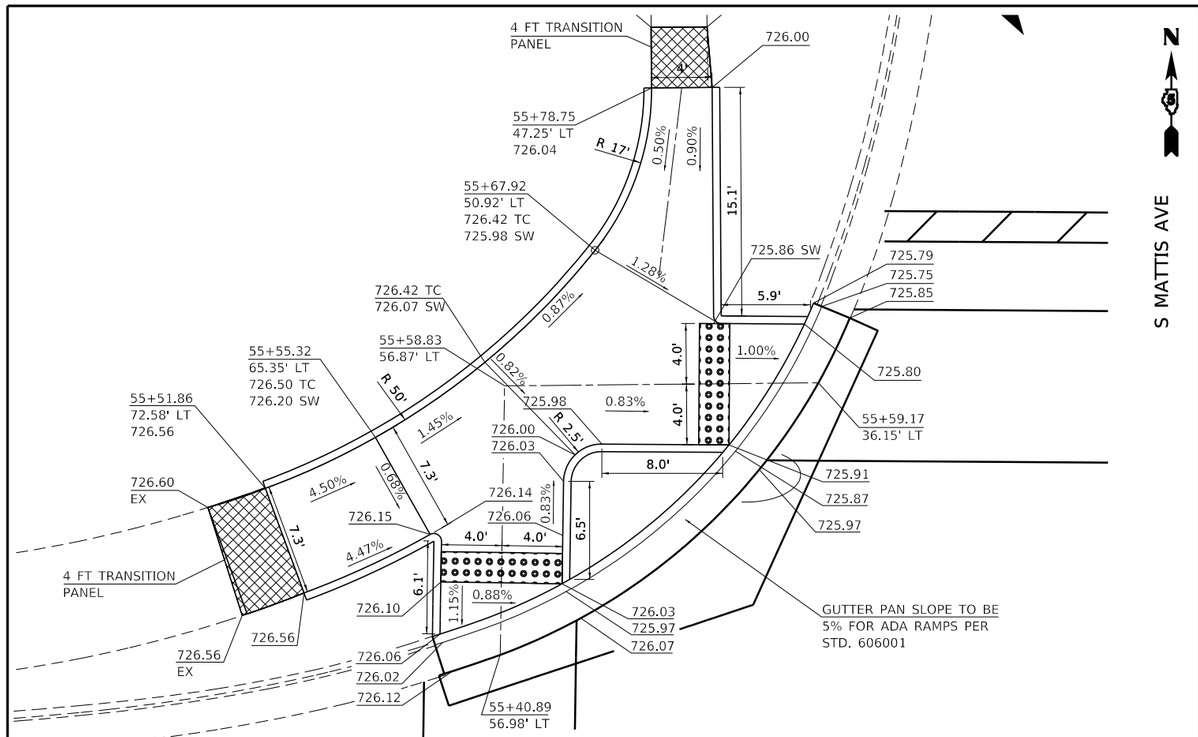

NORTHWEST QUADRANT
SOUTH MATTIS AVENUE AND WEST WINDSOR ROAD

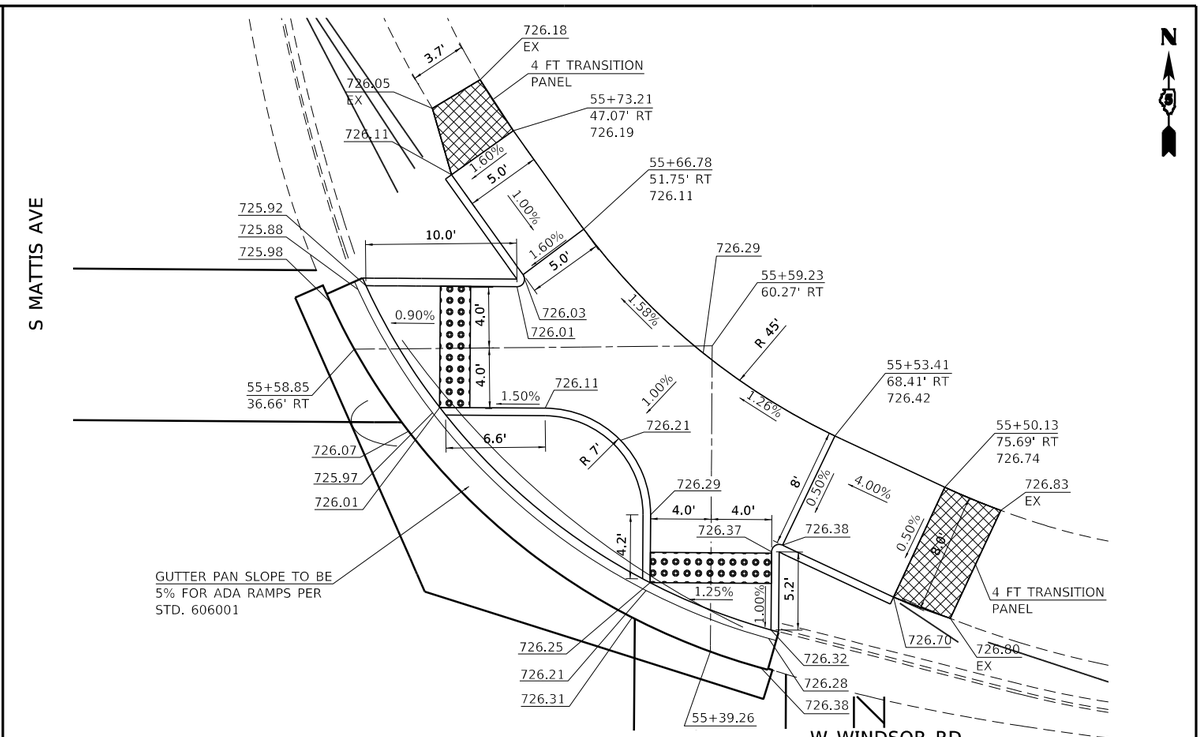

NORTHEAST QUADRANT
SOUTH MATTIS AVENUE AND WEST WINDSOR ROAD

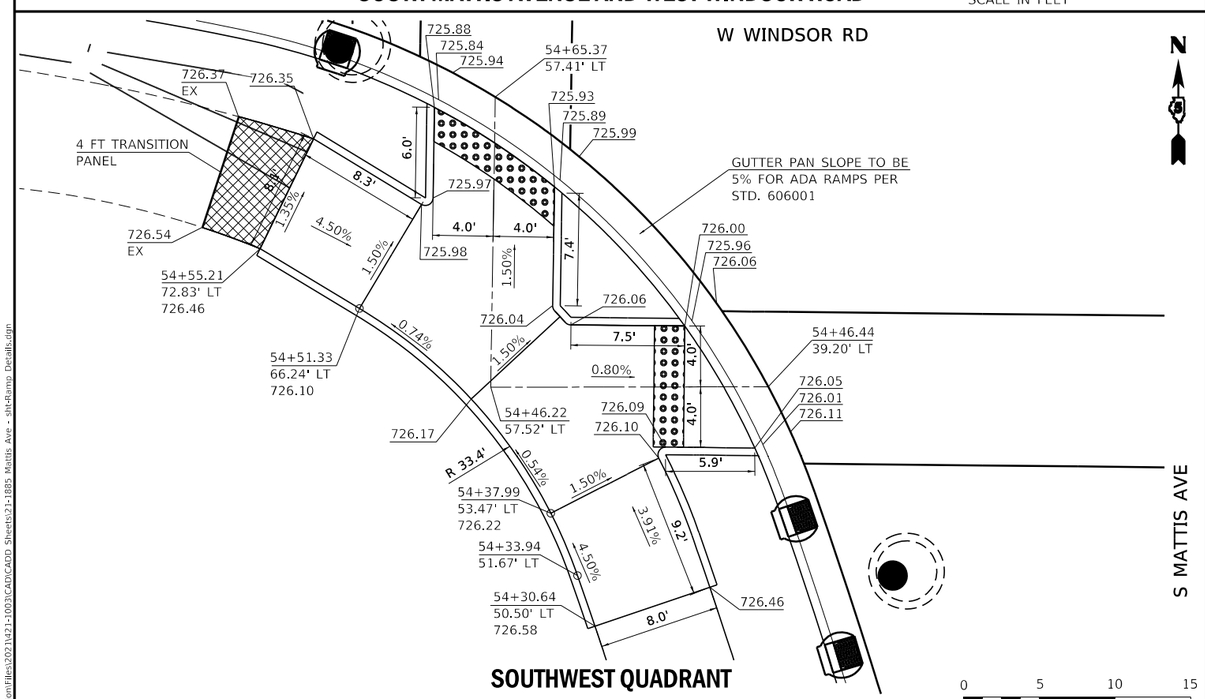

SOUTHWEST QUADRANT
SOUTH MATTIS AVENUE AND WEST WINDSOR ROAD

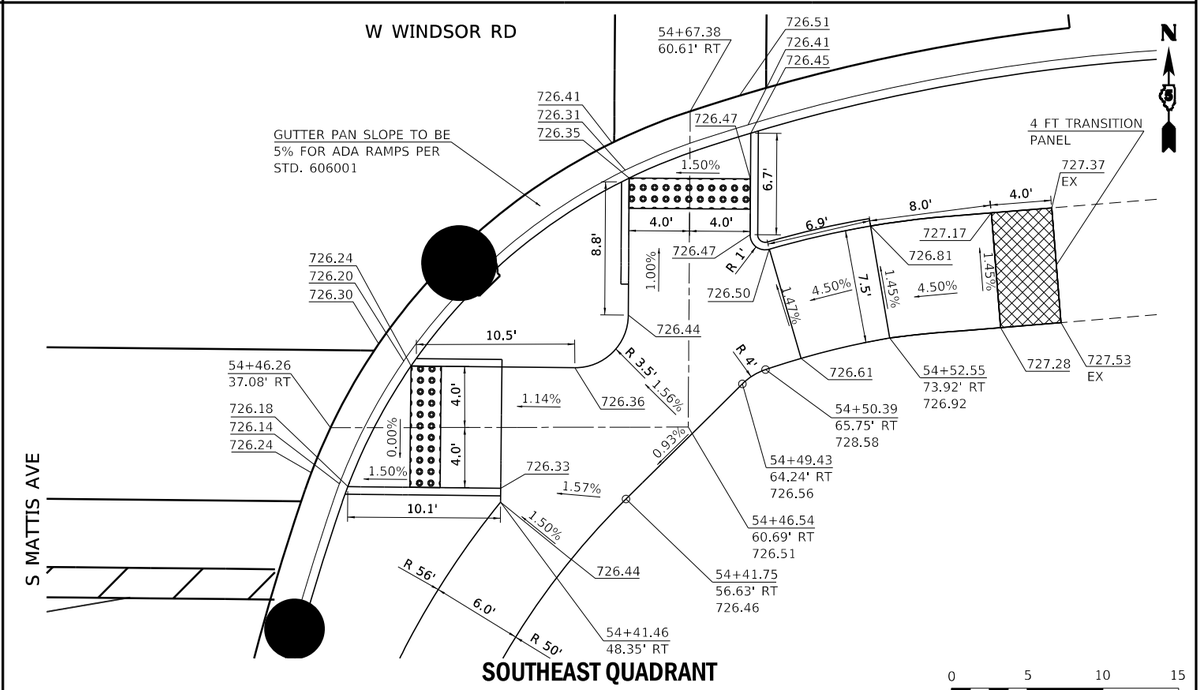

SOUTHEAST QUADRANT
SOUTH MATTIS AVENUE AND WEST WINDSOR ROAD

MODEL: 01 RMP DET
FILE NAME: X:\Production Files\2021\423-1003\CADD\CADD Sheets\21-1885 Mattis Ave - 4ftRamp Details.dgn

LOCHMUELLER GROUP
201 West Springfield Avenue, Suite 1012
Champaign, IL 61820
PHONE: 217.673.7633

USER NAME = Nick.Burrus	DESIGNED -	REVISED -
	DRAWN -	REVISED -
PLOT SCALE = 10.0000 ' / in.	CHECKED -	REVISED -
PLOT DATE = 10/1/2025	DATE -	REVISED -

STATE OF ILLINOIS
DEPARTMENT OF TRANSPORTATION

CURB RAMP DETAILS
SOUTH MATTIS AVENUE AND WEST WINDSOR ROAD

SCALE: 1"=5' | SHEET 1 OF 1 SHEETS | RAMP DET

F.A.U. RTE.	SECTION	COUNTY	TOTAL SHEETS	SHEET NO.
7159	19-000314-00-PV	CHAMPAIGN	197	116
		CONTRACT NO. 91642		
		ILLINOIS FED. AID PROJECT		

Existing Structure: Reinforced Concrete Pipe Culvert 18"

Traffic Control: Mattis Avenue will be closed to traffic.

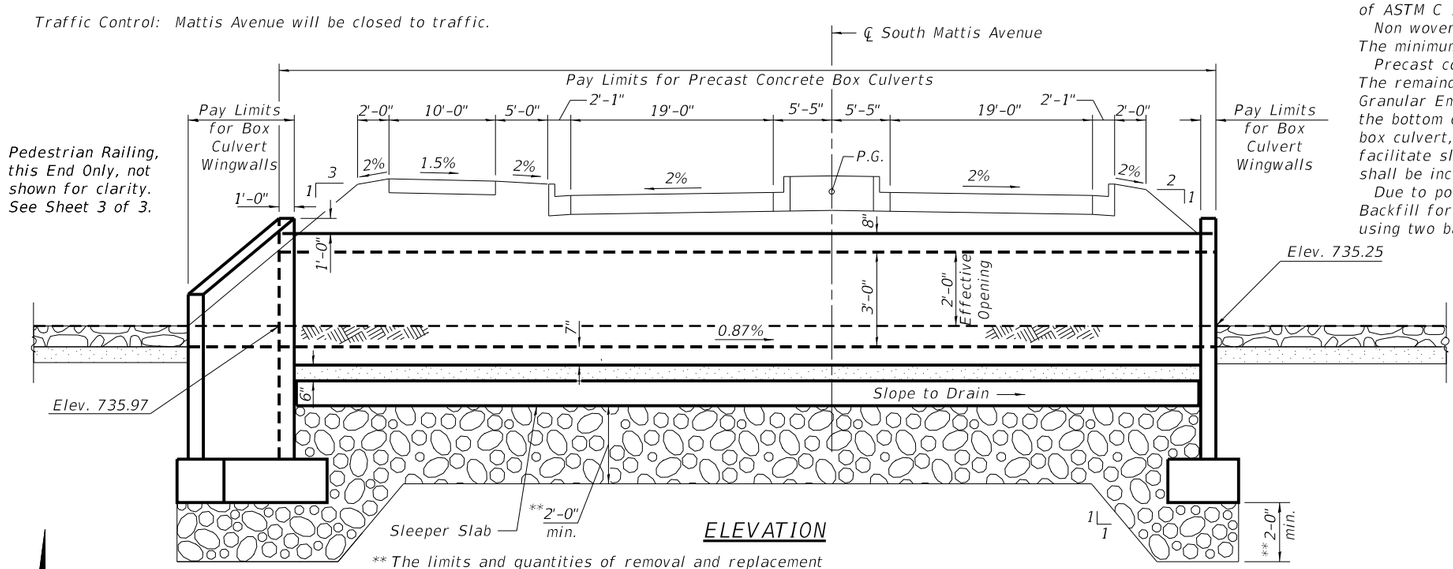

ELEVATION

** The limits and quantities of removal and replacement shown are based on the Boring Data and may be modified by the Engineer and Field Engineers for variable subsurface conditions encountered in the field.

GENERAL NOTES

The design fill height for this box is 1.4 ft. The precast box culvert sections shall conform to the requirements of ASTM C 1577.

Non woven geotextile fabric shall conform to the requirements of Art. 1080.01 of the Standard Specifications. The minimum weight of the fabric shall be 6 ounces per square yard.

Precast concrete box culverts shall be backfilled under the roadway with Controlled Low-Strength Material as shown. The remainder of the precast concrete box culverts and box culvert end sections shall be backfilled with Porous Granular Embankment in the required excavation areas on the sides of the box culvert from the top of the box culvert to the bottom of the box culvert. The 6-inch thick layer of porous granular material required under the precast concrete box culvert, according to Section 540.06 of the standard specifications, shall be placed over the sleeper slab to facilitate sliding assembly of the boxes. The cost of this porous granular material will not be paid for separately but shall be included in the cost of Precast Concrete Box Culverts.

Due to poor soils, a Class SI concrete sleeper slab 7" thick shall be constructed over a minimum of 2'-0" of Granular Backfill for Structures. Place welded wire reinforcement mid-depth of sleeper slab, per Highway Standard 420701-03 using two bays of equal or unequal width.

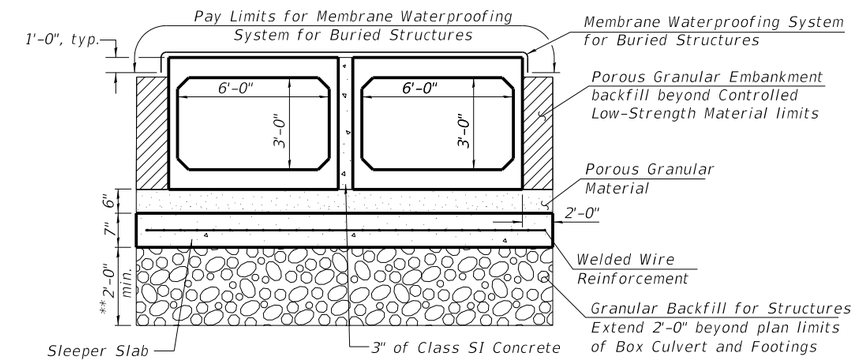

SECTION A-A

Pay Limits for Controlled Low-Strength Material shown as Hatched Area

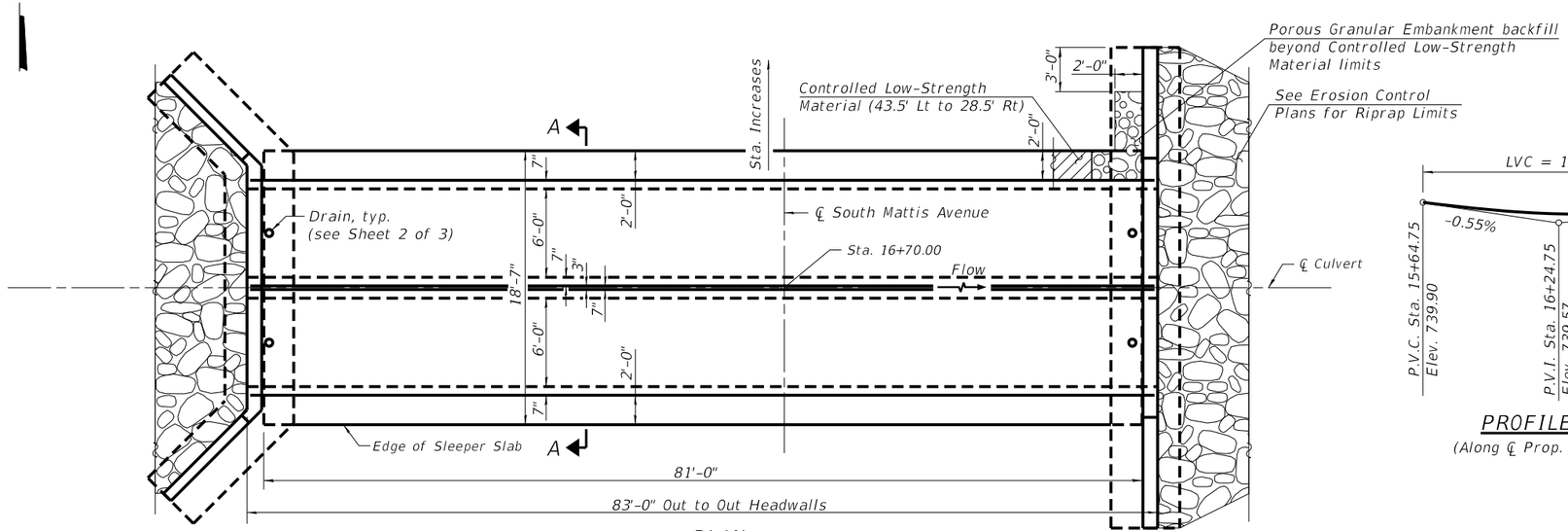

PLAN

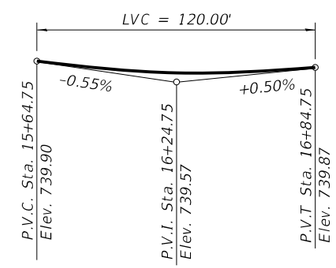

PROFILE GRADE

(Along ℄ Prop. Mattis Avenue)

INDEX OF SHEETS

1. General Plan & Elevation
2. Wingwall & Headwall Details
3. Pedestrian Railing Details

TOTAL BILL OF MATERIAL

ITEM	UNIT	TOTAL
Removal and Disposal of Unsuitable Material for Structures	Cu. Yd.	50
Concrete Box Culverts	Cu. Yd.	26.0
Reinforcement Bars	Pound	2,310
Reinforcement Bars, Epoxy Coated	Pound	260
Precast Concrete Box Culverts, 6 x 3	Foot	166
Controlled Low-Strength Material	Cu. Yd.	39.2
Porous Granular Embankment	Cu. Yd.	26
Granular Backfill for Structures	Cu. Yd.	230
Membrane Waterproofing System for Buried Structures	Sq. Yd.	150
Pedestrian Railing	Foot	30
Sleeper Slab	Sq. Yd.	167.5
Welded Wire Reinforcement	Sq. Yd.	167.5

WATERWAY INFORMATION

Drainage Area = 63.2 acres. Low Grade Elev. = 739.18 @ Sta. 16+62.71

Flood	Freq. Yr.	Q C.F.S.	Opening Sq. Ft. Exist.*	Opening Sq. Ft. Prop.	Nat. H.W.E.	Head - Ft. Exist.	Head - Ft. Prop.	Headwater El. Exist.	Headwater El. Prop.
	10	78	0.8	24	737.77	0.74	0.26	738.51	738.03
	25	92	0.8	24	737.82	0.72	0.44	738.54	738.26
Design	50	102	0.8	24	737.86	0.7	0.55	738.56	738.41
Base		113	0.8	24	737.9	0.67	0.67	738.57	738.57
Max. Calc.		140	0.8	24	737.98	0.63	1.04	738.61	739.02

* Modeling indicates Mattis overtops frequently. Waterway opening does not include overtopping.

DESIGN SPECIFICATIONS

2020 AASHTO LRFD Bridge Design Specifications, 9th Edition
ASTM C1577, current Edition

LOADING HL-93

Allow 50#/s.f. for future wearing surface.
Allowable Soil Bearing Pressure = 2,500 psf

DESIGN STRESSES

PRECAST UNITS

f'c = 5,000 psi
fy = 65,000 psi (Welded Wire Reinf.)

FIELD UNITS

f'c = 3,500 psi
fy = 60,000 psi (Reinf.)

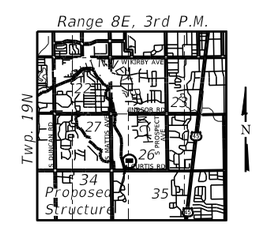

LOCATION SKETCH

GENERAL PLAN & ELEVATION
MATTIS AVENUE OVER
TRIBUTARY TO PHINNEY BRANCH
SEC. 19-000314-00-PV
CHAMPAIGN COUNTY
STATION 16+70.00

LOCHMUELLER GROUP
201 West Springfield Avenue, Suite 1012
Champaign, IL 61820
PHONE: 217.673.7633

USER NAME = Nick.Burrus	DESIGNED - LDG	REVISED -	
	DRAWN - WJS	REVISED -	
PLOT SCALE = 40.0000 ' / in.	CHECKED - TMM	REVISED -	
PLOT DATE = 10/1/2025	DATE - 9/17/2025	REVISED -	

STATE OF ILLINOIS
DEPARTMENT OF TRANSPORTATION

BOX CULVERT STA 16+70.00
SOUTH MATTIS AVENUE

SCALE: N/A | SHEET 1 OF 3 SHEETS | BC 16+70.00 1

F.A.U. RTE.	SECTION	COUNTY	TOTAL SHEETS	SHEET NO.
7159	19-000314-00-PV	CHAMPAIGN	197	117

CONTRACT NO. 91642

ILLINOIS | FED. AID PROJECT

MODEL: BC 01
FILE NAME: X:\ProductionFiles\2021\21-1003\CADD\CADD Sheets\21-1885 Mattis Ave - 9ft-Box Culverts.dgn

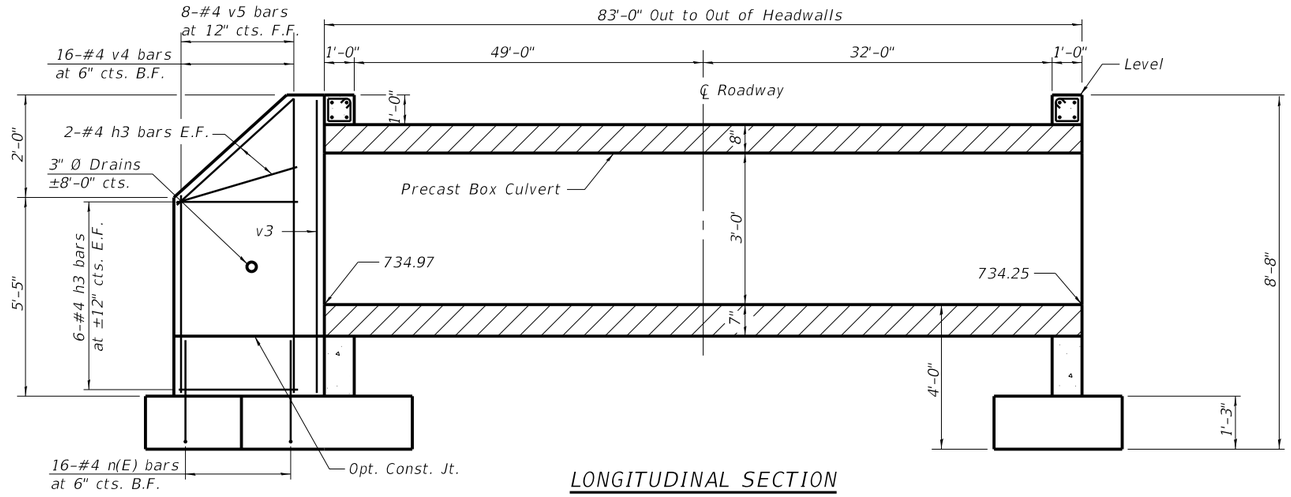

LONGITUDINAL SECTION

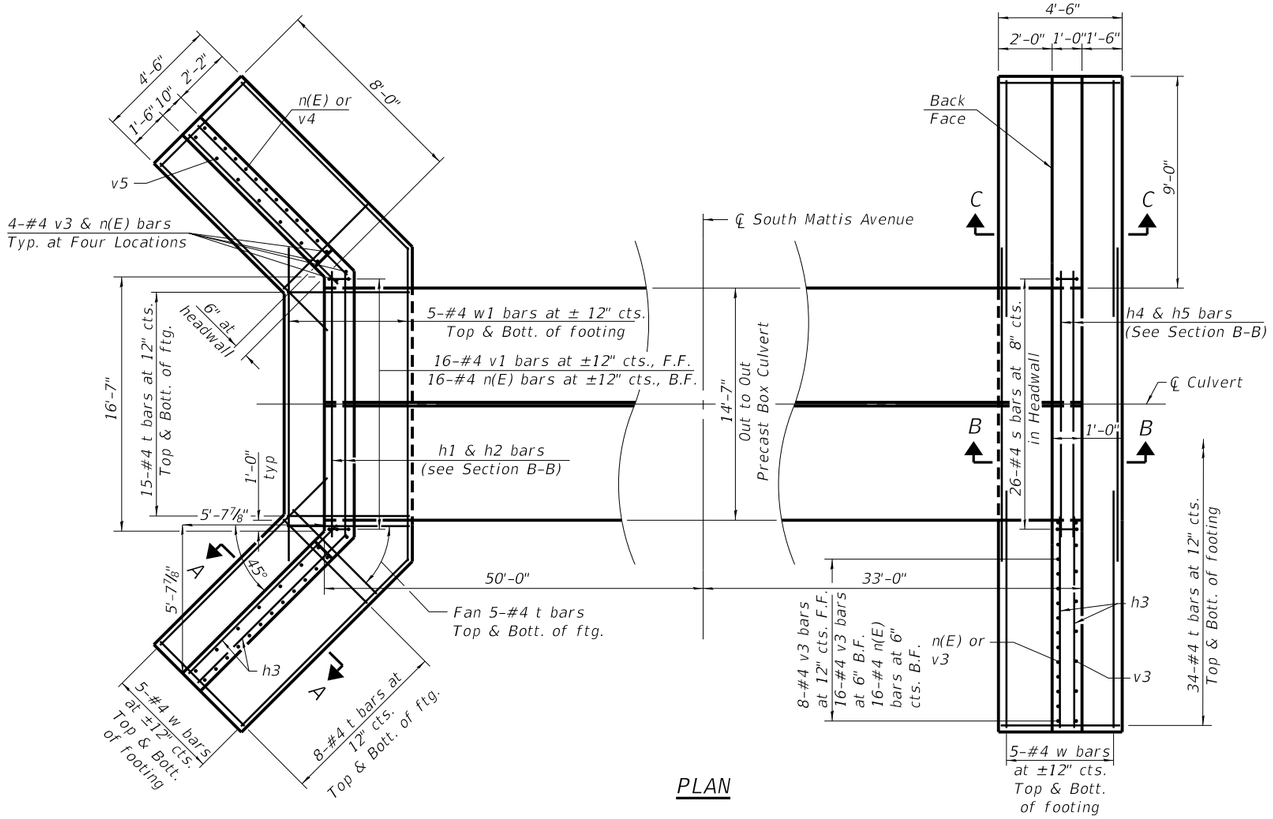

PLAN

SHOWING TOEWALLS & WEST WINGWALLS

SHOWING HEADWALLS & EAST WINGWALLS

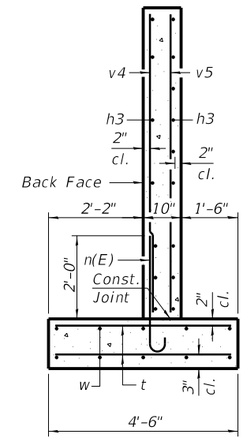

SECTION A-A

(Max. Applied Service Bearing Pressure = 2.3 ksf)

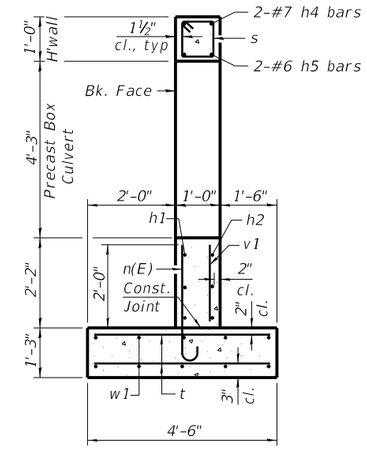

SECTION B-B

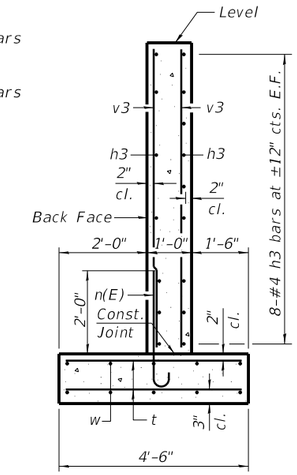

SECTION C-C

(Max. Applied Service Bearing Pressure = 2.3 ksf)

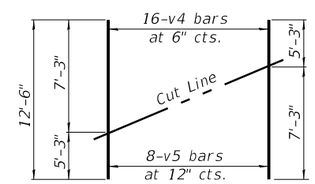

FIELD CUTTING DIAGRAM

Order bars shown full length. Cut as shown and use remainder of bars in opposite wingwall.

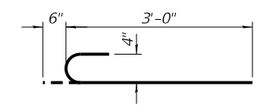

BAR n(E)

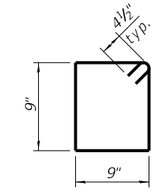

BAR s

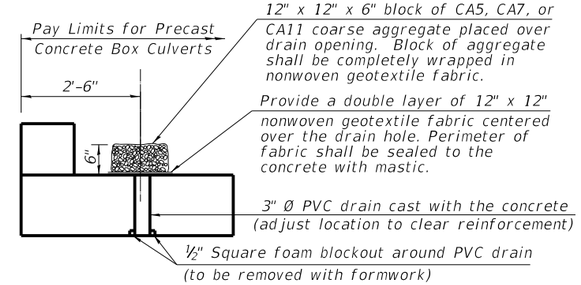

DRAIN DETAIL

(All costs associated with furnishing and constructing the above drain detail will not be measured for payment but shall be included in the contract unit price for the associated work.)

BILL OF MATERIAL

Bar	No.	Size	Length	Shape
h1	6	#4	16'-9"	
h2	6	#4	17'-9"	
h3	64	#4	8'-4"	
h4	4	#7	16'-9"	
h5	4	#6	16'-9"	
n(E)	112	#4	3'-6"	
s	52	#4	3'-9"	
t	150	#4	4'-0"	
v1	32	#4	1'-10"	
v3	64	#4	7'-3"	
v4	16	#4	12'-6"	
v5	8	#4	12'-6"	
w	40	#4	9'-0"	
w1	20	#4	18'-10"	
Concrete Box Culverts		Cu. Yd.	26.0	
Reinforcement Bars		Pound	2,310	
Reinforcement Bars, Epoxy Coated		Pound	260	

LOCHMUELLER GROUP
201 West Springfield Avenue, Suite 1012
Champaign, IL 61820
PHONE: 217.673.7633

USER NAME = Nick.Burrus	DESIGNED - LDG	REVISED -	
	DRAWN - WJS	REVISED -	
PLOT SCALE = 40.0000 ' / in.	CHECKED - TMM	REVISED -	
PLOT DATE = 10/1/2025	DATE - 9/17/2025	REVISED -	

STATE OF ILLINOIS
DEPARTMENT OF TRANSPORTATION

WINGWALL & HEADWALL DETAILS
BOX CULVERT STA 16+70.00

SCALE: N/A | SHEET 2 OF 3 SHEETS | BC 16+70.00 2

F.A.U. RTE.	SECTION	COUNTY	TOTAL SHEETS	SHEET NO.
7159	19-000314-00-PV	CHAMPAIGN	197	118

CONTRACT NO. 91642

ILLINOIS | FED. AID PROJECT

MODEL: BC 03-2
FILE NAME: X:\Production\Files\2021\21-1003\CADD\CADD Sheets\21-1885 Mattis Ave - 4ftx8ft Box Culverts.dgn

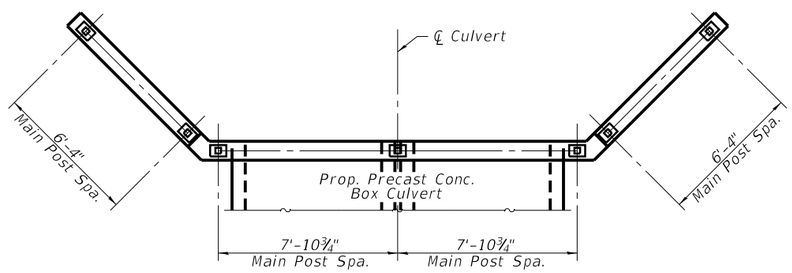

PLAN VIEW

(Upstream side only)

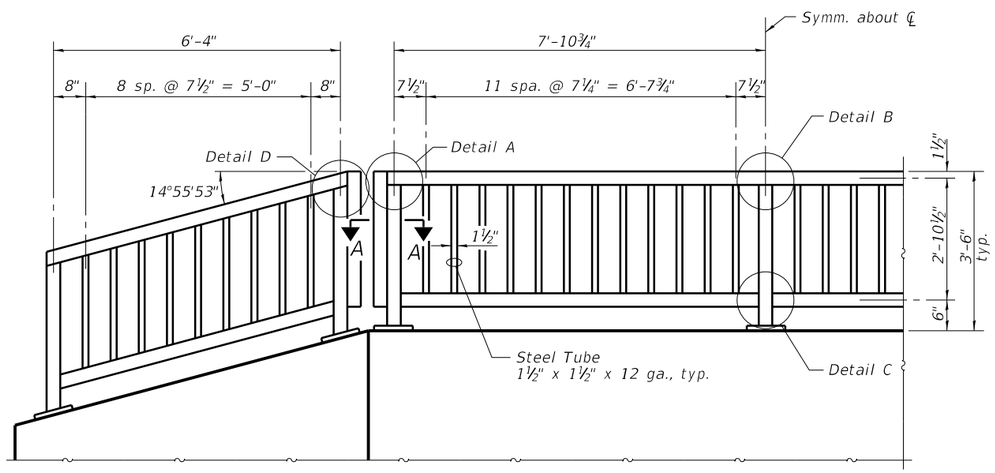

TYPICAL RAILING DETAIL

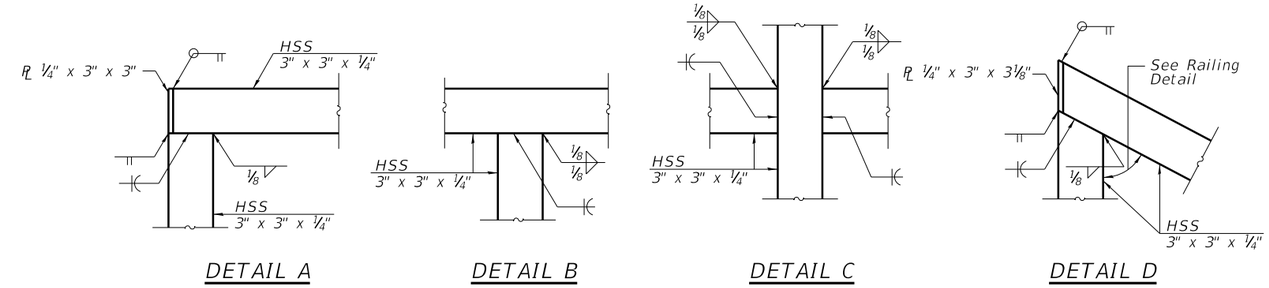

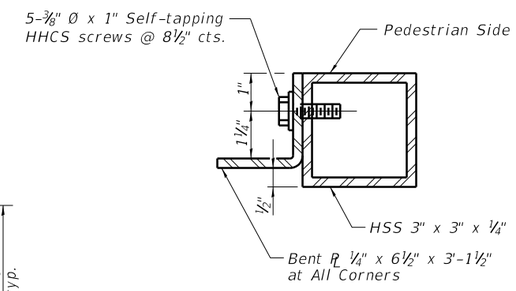

SECTION A-A

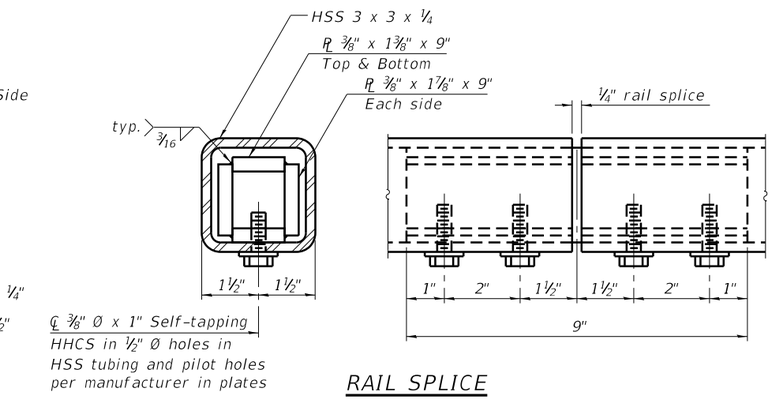

RAIL SPLICE

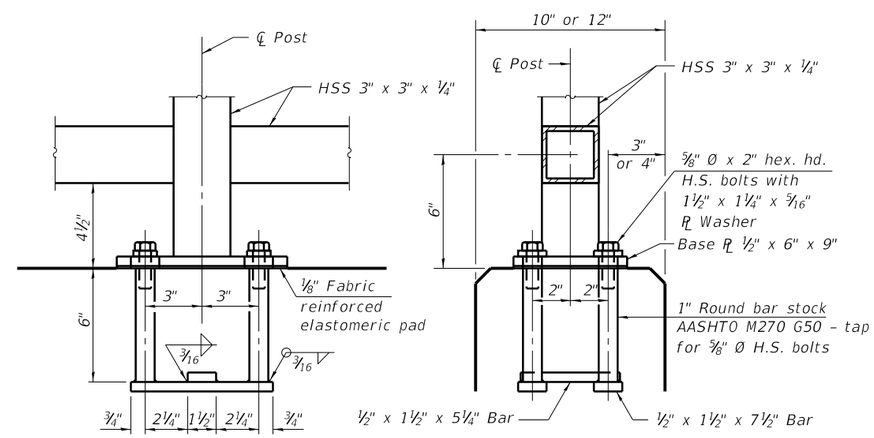

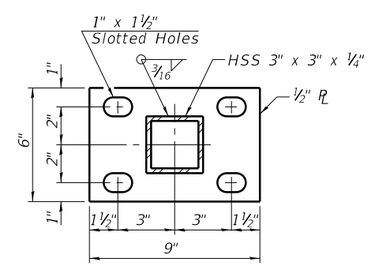

BASE PL

(7 req'd.)

NOTES

Railing shall be according to Section 509 of the Standard Specifications, except as noted, and will be paid for at the Contract Unit Price per foot for Pedestrian Railing.

Hollow structural sections shall conform to the requirements of ASTM designation A 500, Grade B, structural steel tubing.

All other steel shapes and plates shall conform to the requirements of AASHTO M 270 Grade 36.

CVN testing is not required for the HSS tubing used in the Pedestrian Railing.

All heavy hex nuts shall be according to ASTM A 563 grade DH.

All fully threaded anchor rods shall be ASTM F1554 grade 105.

The post base plate shall be fastened to the wall snug tight and given an additional ⅛" turn.

Rail splice inserts may be built out of bent plates of the same thicknesses and outside geometry limits as the 4-plate rail splice inserts shown.

Space reinforcement to miss anchor rods.

All posts, railing, splices, anchor devices, and bent plates shall be galvanized and painted. Galvanizing shall be according to Article 509.05 of the Standard Specifications. See Special Provisions.

ANCHOR BOLT DETAILS

In lieu of the cast-in-place anchor device shown, the Contractor has the option of drilling and setting ⅝" Ø fully threaded anchor rods with the same plate washers as specified above and heavy hex lock nuts according to Article 509.06 of the Standard Specifications. Embedment shall be according to the manufacturer's specifications.

BILL OF MATERIAL

Item	Unit	Quantity
Pedestrian Railing	Foot	30

MODEL: BC 01-3
FILE NAME: X:\Production\Files\2021\421-1003\CAD\CADD Sheets\21-1885 Mattis Ave - slM-Box Culverts.dgn

LOCHMUELLER GROUP
201 West Springfield Avenue, Suite 1012
Champaign, IL 61820
PHONE: 217.673.7633

USER NAME = Nick.Burrus	DESIGNED - LDG	REVISED -	
	DRAWN - WJS	REVISED -	
PLOT SCALE = 40.0000 ' / in.	CHECKED - TMM	REVISED -	
PLOT DATE = 10/1/2025	DATE - 9/17/2025	REVISED -	

STATE OF ILLINOIS
DEPARTMENT OF TRANSPORTATION

PEDESTRIAN RAILING DETAILS
BOX CULVERT STA 16+70.00

SCALE: N/A | SHEET 3 OF 3 SHEETS | BC 16+70.00 3

F.A.U. RTE.	SECTION	COUNTY	TOTAL SHEETS	SHEET NO.
7159	19-000314-00-PV	CHAMPAIGN	197	119
		CONTRACT NO. 91642		
		ILLINOIS	FED. AID PROJECT	

Existing Structure: Reinforced Concrete Pipe Culvert 18"

Traffic Control: Mattis Avenue will be closed to traffic.

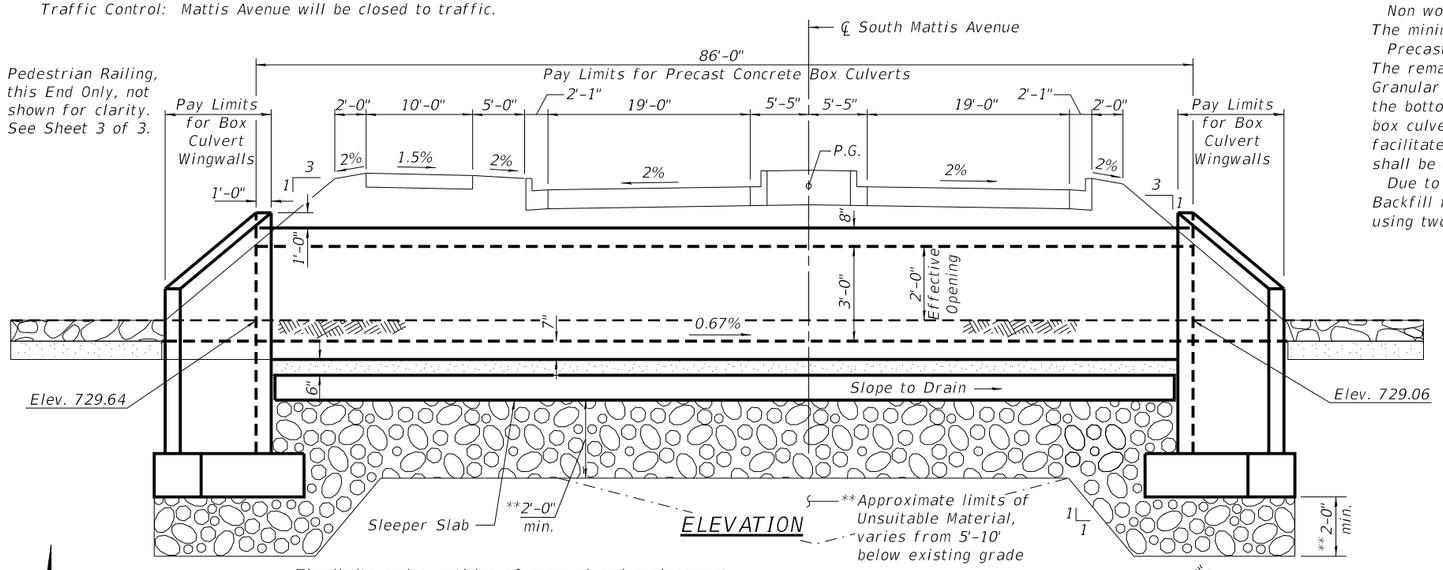

**The limits and quantities of removal and replacement shown are based on the Boring Data and may be modified by the Engineer and Field Engineers for variable subsurface conditions encountered in the field.

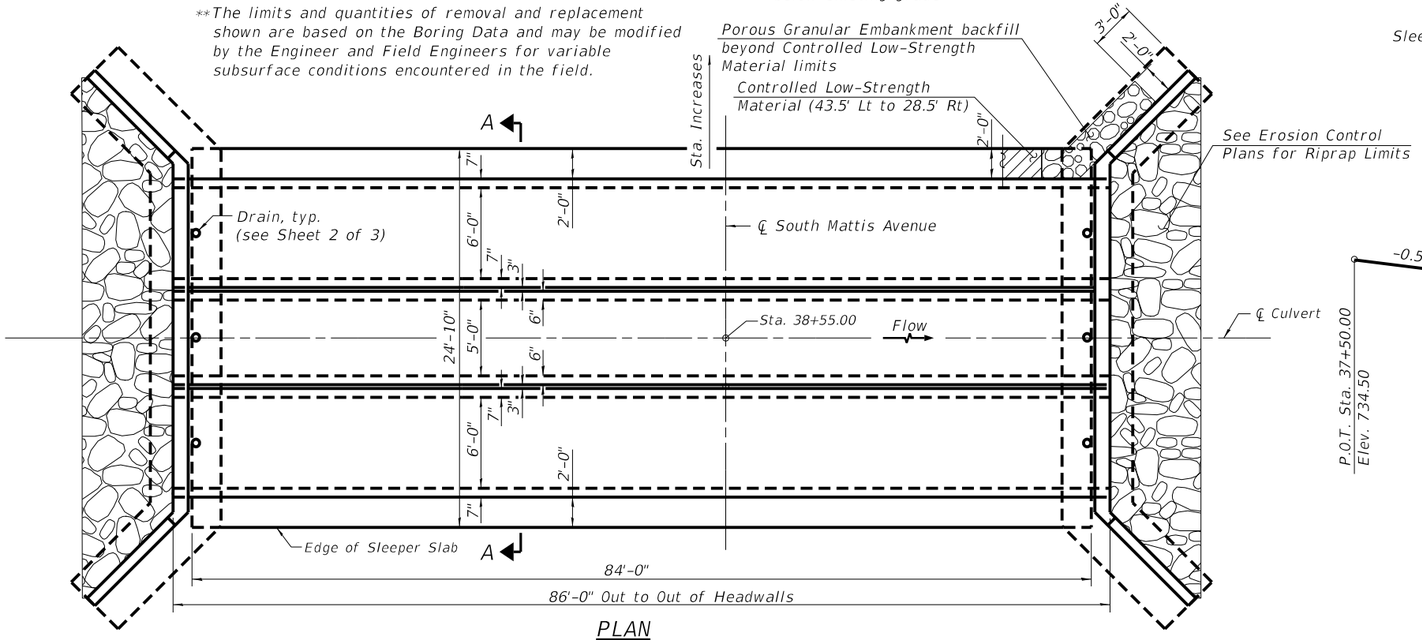

PLAN

WATERWAY INFORMATION

Drainage Area = 123.3 acres. Low Grade Elev. = 733.47 @ Sta. 38+65.38

Flood	Freq. Yr.	Q C.F.S.	Opening Sq. Ft. Exist.*	Opening Sq. Ft. Prop.	Nat. H.W.E.	Head - Ft. Exist.	Head - Ft. Prop.	Headwater El. Exist.	Headwater El. Prop.
	10	121	1.07	34	731.4	0.77	0.21	732.17	731.61
	25	143	1.07	34	731.45	0.78	0.4	732.23	731.85
Design	50	160	1.07	34	731.49	0.77	0.53	732.26	732.02
Base	100	178	1.07	34	731.52	0.76	0.68	732.28	732.2
Max. Calc.	500	223	1.07	34	731.61	0.73	1.17	732.34	732.78

* Modeling indicates Mattis overtops frequently. Waterway opening does not include overtopping.

DESIGN SPECIFICATIONS

2020 AASHTO LRFD Bridge Design Specifications, 9th Edition
ASTM C1577, current Edition

LOADING HL-93

Allow 50#/s.f. for future wearing surface.
Allowable Soil Bearing Pressure = 2,500 psf

DESIGN STRESSES

PRECAST UNITS

f'c = 5,000 psi
fy = 65,000 psi (Welded Wire Reinf.)

FIELD UNITS

f'c = 3,500 psi
fy = 60,000 psi (Reinf.)

GENERAL NOTES

The design fill height for this box is 1.4 ft. The precast box culvert sections shall conform to the requirements of ASTM C 1577.

Non woven geotextile fabric shall conform to the requirements of Art. 1080.01 of the Standard Specifications. The minimum weight of the fabric shall be 6 ounces per square yard.

Precast concrete box culverts shall be backfilled under the roadway with Controlled Low-Strength Material as shown. The remainder of the precast concrete box culverts and box culvert end sections shall be backfilled with Porous Granular Embankment in the required excavation areas on the sides of the box culvert from the top of the box culvert to the bottom of the box culvert. The 6-inch thick layer of porous granular material required under the precast concrete box culvert, according to Section 540.06 of the standard specifications, shall be placed over the sleeper slab to facilitate sliding assembly of the boxes. The cost of this porous granular material will not be paid for separately but shall be included in the cost of Precast Concrete Box Culverts.

Due to poor soils, a Class SI concrete sleeper slab 7" thick shall be constructed over a minimum of 2'-0" of Granular Backfill for Structures. Place welded wire reinforcement mid-depth of sleeper slab, per Highway Standard 420701-03 using two bays of equal or unequal width.

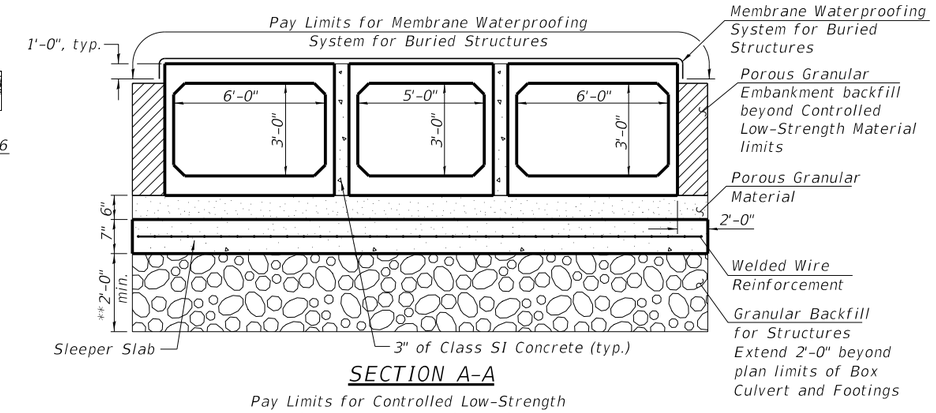

SECTION A-A

Pay Limits for Controlled Low-Strength Material shown as Hatched Area

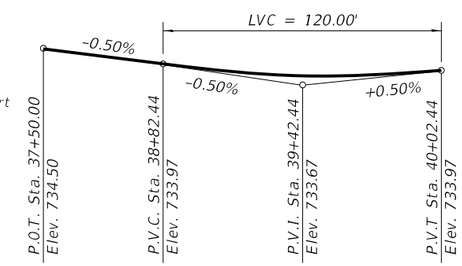

PROFILE GRADE

(Along ℄ Prop. Mattis Avenue)

INDEX OF SHEETS

1. General Plan & Elevation
2. Wingwall & Headwall Details
3. Pedestrian Railing Details

TOTAL BILL OF MATERIAL

ITEM	UNIT	TOTAL
Removal and Disposal of Unsuitable Material for Structures	Cu. Yd.	100
Concrete Box Culverts	Cu. Yd.	29.2
Reinforcement Bars	Pound	2,660
Reinforcement Bars, Epoxy Coated	Pound	290
Precast Concrete Box Culverts, 5 x 3	Foot	86
Precast Concrete Box Culverts, 6 x 3	Foot	172
Controlled Low-Strength Material	Cu. Yd.	39.2
Porous Granular Embankment	Cu. Yd.	26
Granular Backfill for Structures	Cu. Yd.	335
Membrane Waterproofing System for Buried Structures	Sq. Yd.	214
Pedestrian Railing	Foot	36
Sleeper Slab	Sq. Yd.	231.8
Welded Wire Reinforcement	Sq. Yd.	231.8

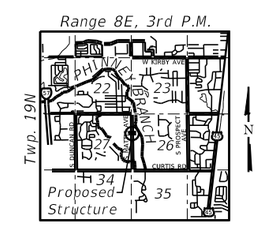

LOCATION SKETCH

GENERAL PLAN & ELEVATION
MATTIS AVENUE OVER
TRIBUTARY TO PHINNEY BRANCH
SEC. 19-000314-00-PV
CHAMPAIGN COUNTY
STATION 38+55.00

LOCHMUELLER GROUP
201 West Springfield Avenue, Suite 1012
Champaign, IL 61820
PHONE: 217.673.7633

USER NAME = Nick.Burrus	DESIGNED - LDG	REVISED -	
	DRAWN - WJS	REVISED -	
PLOT SCALE = 40.0000 ' / in.	CHECKED - ___	REVISED -	
PLOT DATE = 10/1/2025	DATE -	REVISED -	

STATE OF ILLINOIS
DEPARTMENT OF TRANSPORTATION

BOX CULVERT STA 38+55.00
SOUTH MATTIS AVENUE

SCALE: N/A | SHEET 1 OF 3 SHEETS | BC 38+55.00 1

F.A.U. RTE.	SECTION	COUNTY	TOTAL SHEETS	SHEET NO.
7159	19-000314-00-PV	CHAMPAIGN	197	120

CONTRACT NO. 91642

ILLINOIS | FED. AID PROJECT

MODEL: BC 02
FILE NAME: X:\Production\Files\2021\421-1003\CADD\CADD Sheets\21-1885 Mattis Ave - slM-Box Culverts.dgn

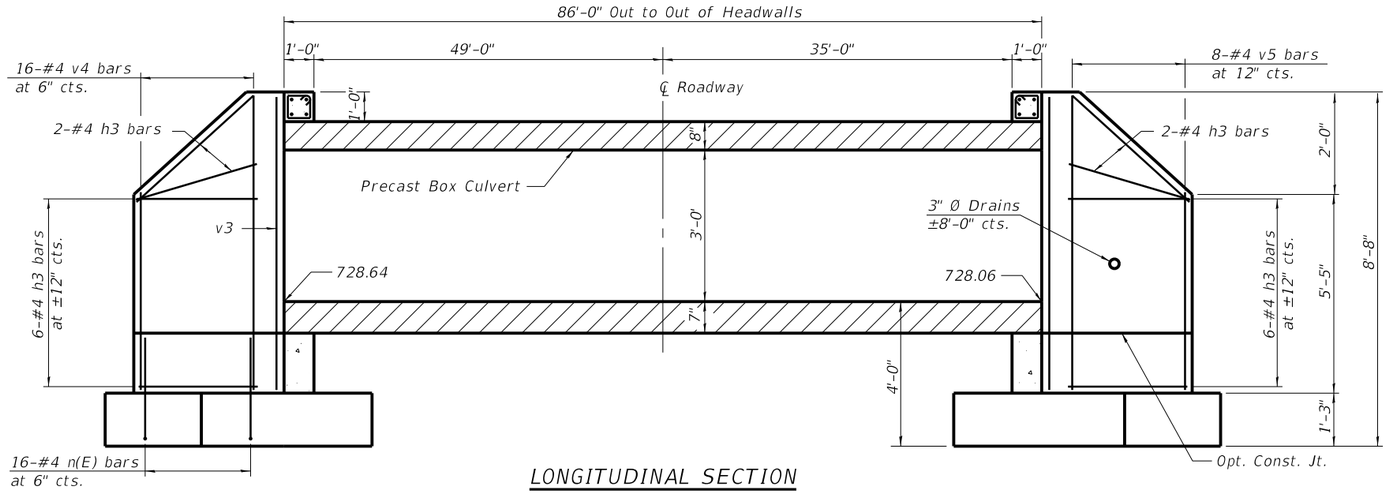

LONGITUDINAL SECTION

REINF. - BACK FACE

REINF. - FRONT FACE

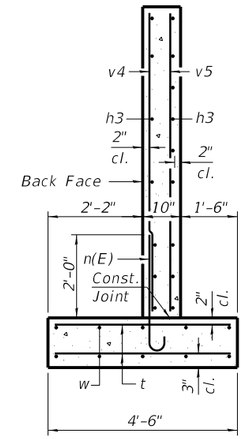

SECTION A-A

(Max. Applied Service Bearing Pressure = 2.3 ksf)

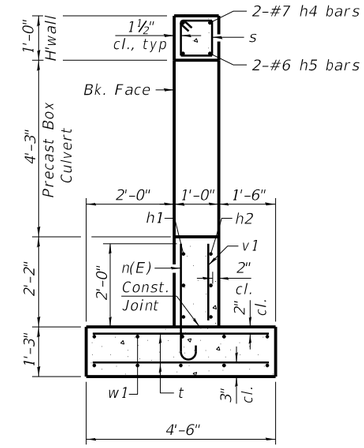

SECTION B-B

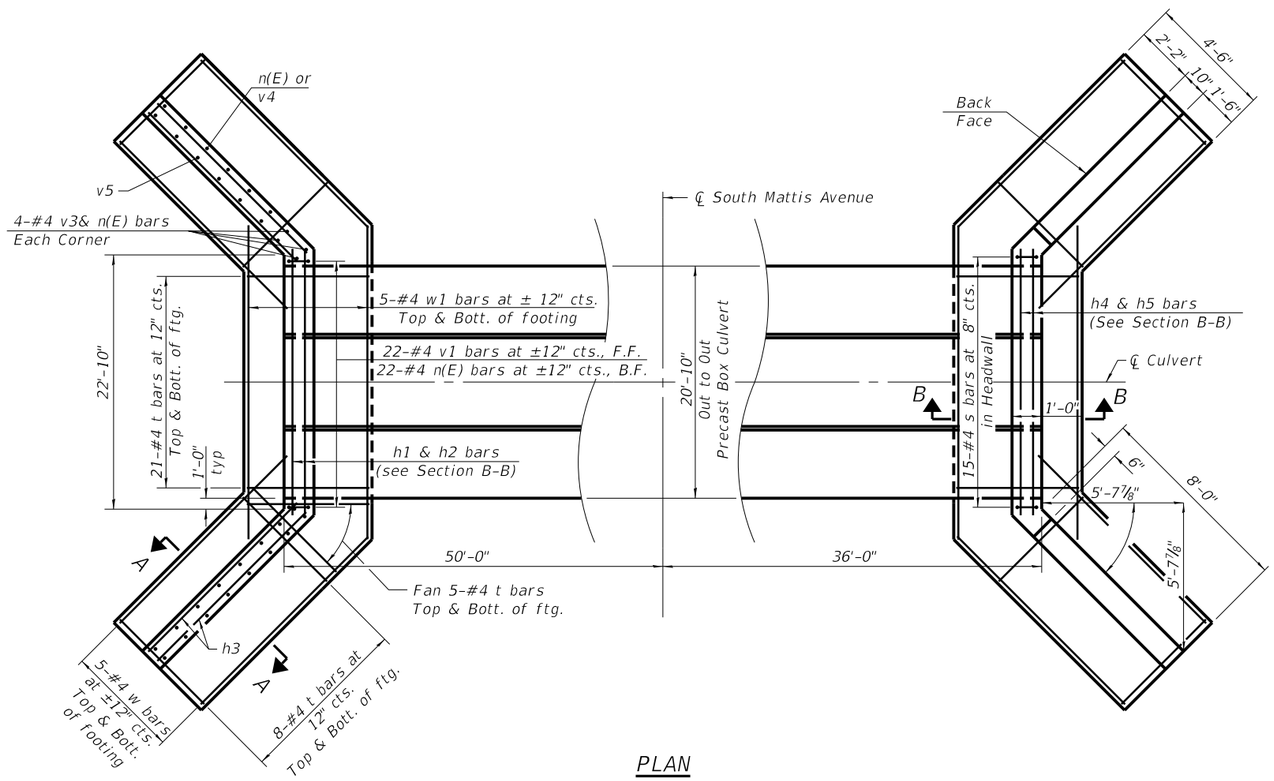

PLAN

SHOWING TOEWALL

SHOWING HEADWALL

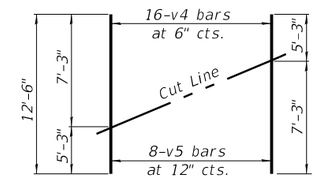

FIELD CUTTING DIAGRAM

Order bars shown full length. Cut as shown and use remainder of bars in opposite wingwall.

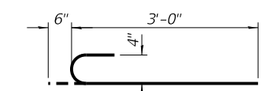

BAR n(E)

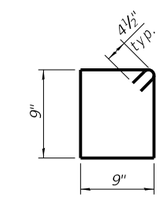

BAR s

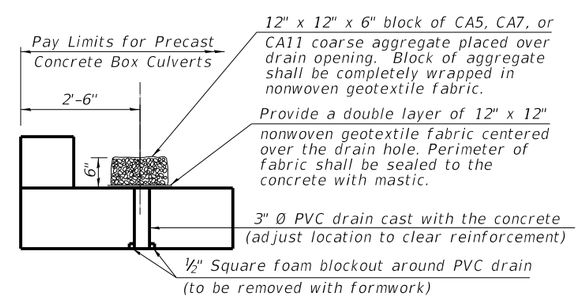

DRAIN DETAIL

(All costs associated with furnishing and constructing the above drain detail will not be measured for payment but shall be included in the contract unit price for the associated work.)

BILL OF MATERIAL

Bar	No.	Size	Length	Shape
h1	6	#4	23'-0"	
h2	6	#4	24'-0"	
h3	64	#4	8'-4"	
h4	4	#7	23'-0"	
h5	4	#6	23'-0"	
n(E)	124	#4	3'-6"	
s	70	#4	3'-9"	
t	188	#4	4'-0"	
v1	44	#4	1'-10"	
v3	16	#4	7'-3"	
v4	32	#4	12'-6"	
v5	16	#4	12'-6"	
w	40	#4	9'-0"	
w1	20	#4	25'-1"	
Concrete Box Culverts			Cu. Yd.	29.2
Reinforcement Bars			Pound	2,660
Reinforcement Bars, Epoxy Coated			Pound	290

LOCHMUELLER GROUP
201 West Springfield Avenue, Suite 1012
Champaign, IL 61820
PHONE: 217.673.7633

USER NAME = Nick.Burrus	DESIGNED - LDG	REVISED -	
	DRAWN - WJS	REVISED -	
PLOT SCALE = 40.0000 ' / in.	CHECKED - ___	REVISED -	
PLOT DATE = 10/1/2025	DATE -	REVISED -	

STATE OF ILLINOIS
DEPARTMENT OF TRANSPORTATION

WINGWALL & HEADWALL DETAILS
BOX CULVERT STA 38+55.00

SCALE: N/A | SHEET 2 OF 3 SHEETS | BC 38+55.00 2

F.A.U. RTE.	SECTION	COUNTY	TOTAL SHEETS	SHEET NO.
7159	19-000314-00-PV	CHAMPAIGN	197	121
		CONTRACT NO. 91642		
		ILLINOIS FED. AID PROJECT		

MODEL: BC 02-2
FILE NAME: X:\Production\Files\2021\21-1003\CADD Sheets\21-1885 Mattis Ave - SN-Box Culverts.dgn

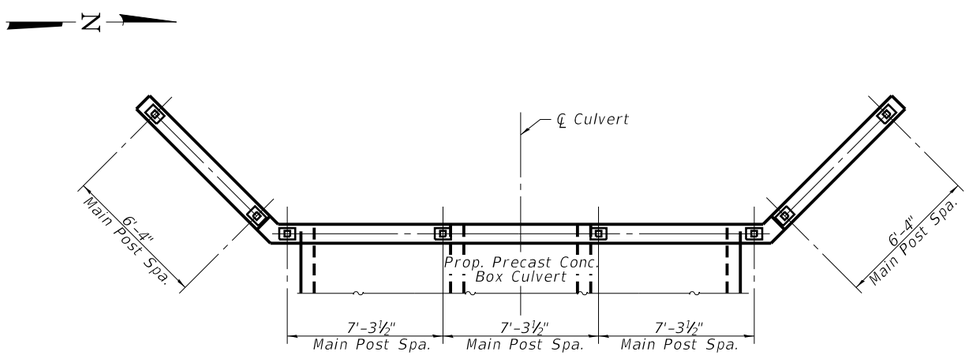

PLAN VIEW

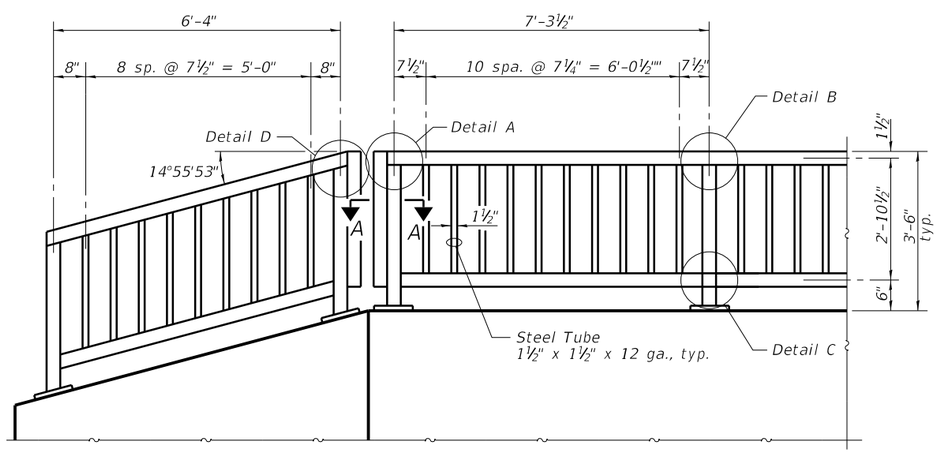

TYPICAL RAILING DETAIL

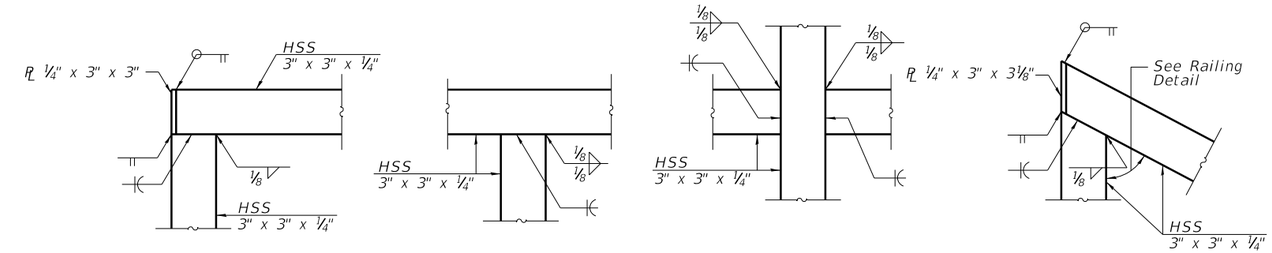

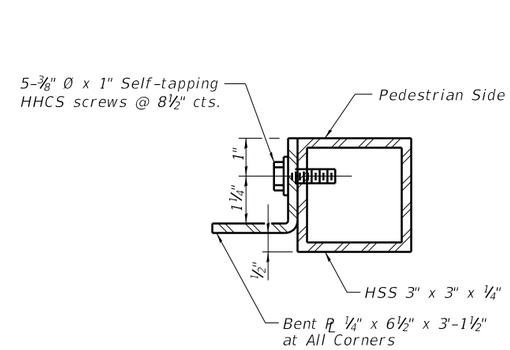

SECTION A-A

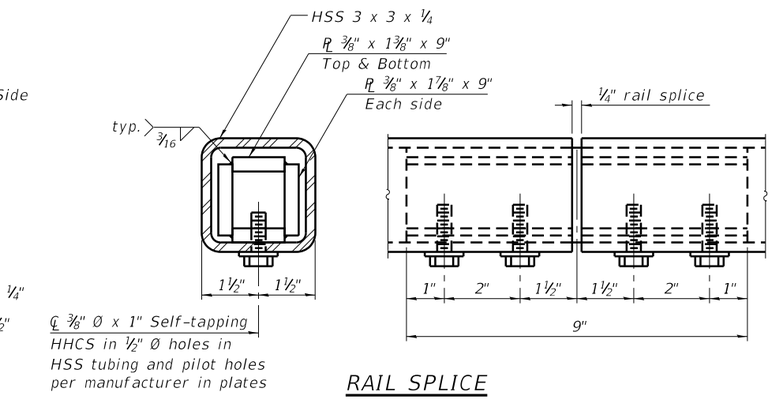

RAIL SPLICE

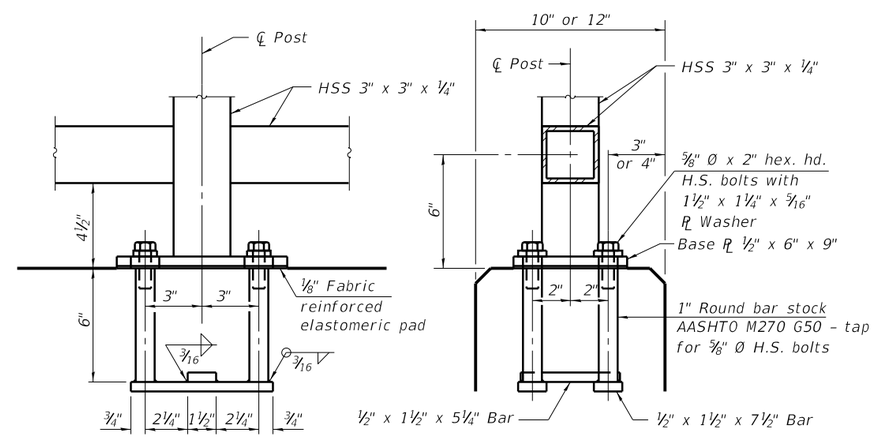

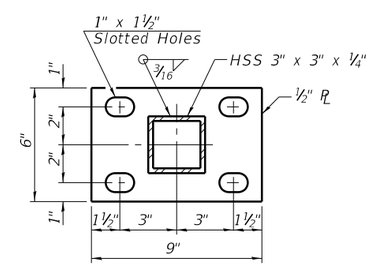

BASE PL
(7 req'd.)

NOTES

Railing shall be according to Section 509 of the Standard Specifications, except as noted, and will be paid for at the Contract Unit Price per foot for Pedestrian Railing.

Hollow structural sections shall conform to the requirements of ASTM designation A 500, Grade B, structural steel tubing.

All other steel shapes and plates shall conform to the requirements of AASHTO M 270 Grade 36.

CVN testing is not required for the HSS tubing used in the Pedestrian Railing.

All heavy hex nuts shall be according to ASTM A 563 grade DH.

All fully threaded anchor rods shall be ASTM F1554 grade 105.

The post base plate shall be fastened to the wall snug tight and given an additional ⅛" turn.

Rail splice inserts may be built out of bent plates of the same thicknesses and outside geometry limits as the 4-plate rail splice inserts shown.

Space reinforcement to miss anchor rods.

All posts, railing, splices, anchor devices, and bent plates shall be galvanized and painted. Galvanizing shall be according to Article 509.05 of the Standard Specifications. See Special Provisions.

ANCHOR BOLT DETAILS

In lieu of the cast-in-place anchor device shown, the Contractor has the option of drilling and setting ⅝" Ø fully threaded anchor rods with the same plate washers as specified above and heavy hex lock nuts according to Article 509.06 of the Standard Specifications. Embedment shall be according to the manufacturer's specifications.

BILL OF MATERIAL

Item	Unit	Quantity
Pedestrian Railing	Foot	36

LOCHMUELLER GROUP
201 West Springfield Avenue, Suite 1012
Champaign, IL 61820
PHONE: 217.673.7633

USER NAME = Nick.Burrus	DESIGNED - LDG	REVISED -	
	DRAWN - WJS	REVISED -	
PLOT SCALE = 40.0000 ' / in.	CHECKED - ___	REVISED -	
PLOT DATE = 10/1/2025	DATE -	REVISED -	

STATE OF ILLINOIS
DEPARTMENT OF TRANSPORTATION

PEDESTRIAN RAILING DETAILS
BOX CULVERT STA 38+55.00

SCALE: N/A | SHEET 3 OF 3 SHEETS | BC 38+55.00 3

F.A.U. RTE.	SECTION	COUNTY	TOTAL SHEETS	SHEET NO.
7159	19-000314-00-PV	CHAMPAIGN	197	122
		CONTRACT NO. 91642		
		ILLINOIS	FED. AID PROJECT	

MODEL: BC 02-3
FILE NAME: X:\Production\Files\2021\421-1003\CAD\CADD Sheets\21-1885 Mattis Ave - sht-Box Culverts.dgn

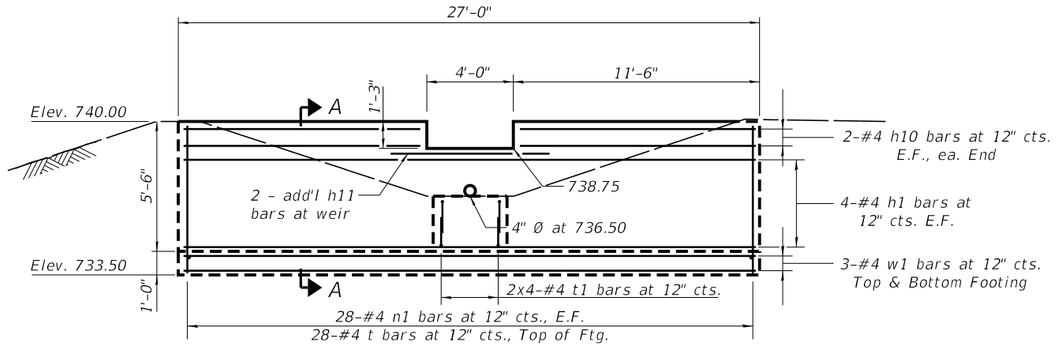

MC1 STRUCTURE OUTLET - NORTH

Sta 16+95.00

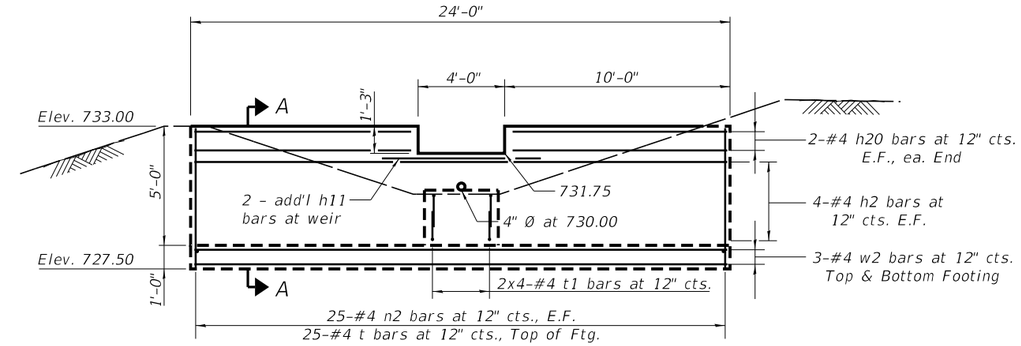

MC2 STRUCTURE OUTLET - NORTH

Sta 38+89.00

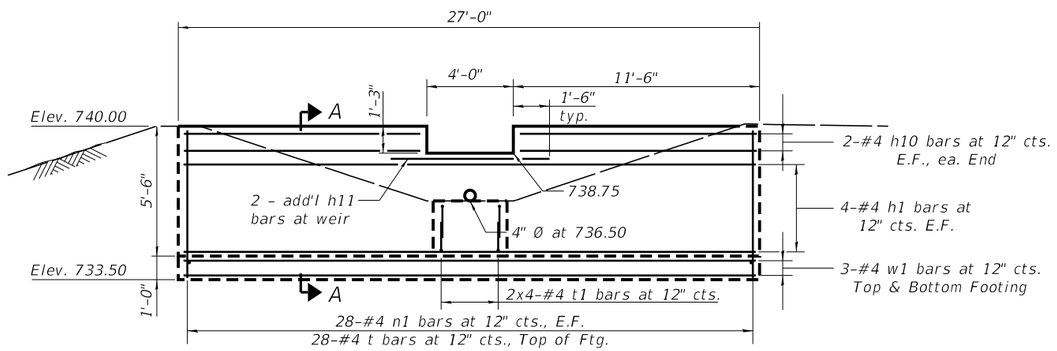

MC1 STRUCTURE OUTLET - SOUTH

Sta 16+48.50

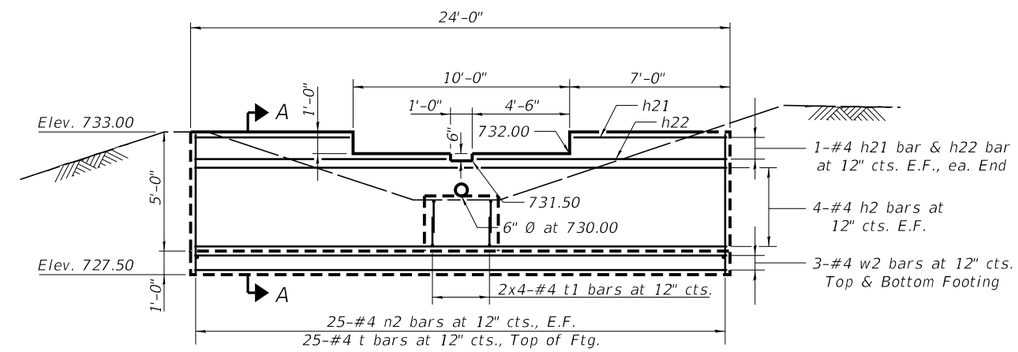

MC2 STRUCTURE OUTLET - SOUTH

Sta 38+23.50

DESIGN STRESSES

f'c = 3,500 psi
fy = 60,000 psi (Reinf.)

NOTES

Space reinforcement to miss small circular drains.

Reinforcement may be cut in the field, as required, to miss weirs.

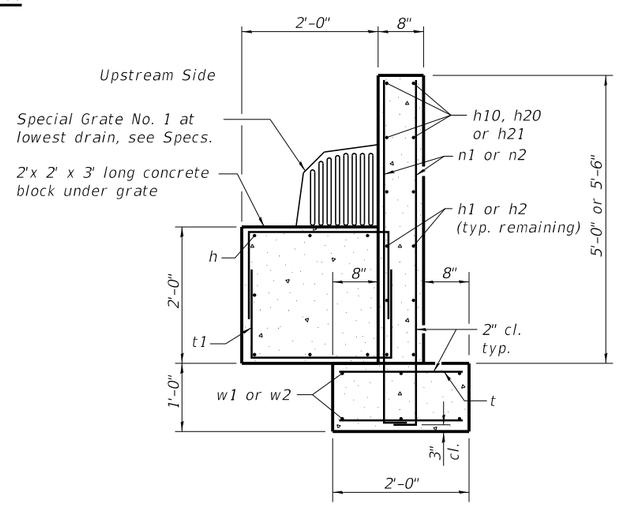

SECTION A-A

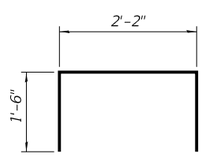

BAR t1

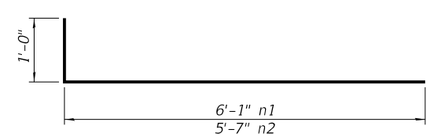

BAR n1 or n2

BILL OF MATERIAL

Bar	No.	Size	Length	Shape
h	28	#4	2'-6"	
h1	16	#4	26'-6"	
h2	16	#4	23'-6"	
h10	8	#4	11'-0"	
h11	6	#4	7'-0"	
h20	4	#4	9'-6"	
h21	4	#4	6'-6"	
h22	4	#4	11'-0"	
n1	112	#4	7'-1"	
n2	100	#4	6'-7"	
t	106	#4	1'-6"	
t1	32	#4	5'-2"	
w1	12	#4	26'-6"	
w2	12	#4	23'-6"	
Concrete Structures			Cu. Yd.	22.0
Reinforcement Bars			Pound	2,330
Special Grate No. 1			Each	4

MODEL: Detention Outlet
FILE NAME: X:\Production\Files\2021\471-1003\CADD Sheets\21-1885 Mattis Ave - 4ft-Box Culverts.dgn

LOCHMUELLER GROUP
201 West Springfield Avenue, Suite 1012
Champaign, IL 61820
PHONE: 217.673.7633

USER NAME = Nick.Burrus	DESIGNED - LDG	REVISED -	
	DRAWN - WJS	REVISED -	
PLOT SCALE = 40.0000 ' / in.	CHECKED - ---	REVISED -	
PLOT DATE = 10/1/2025	DATE -	REVISED -	

STATE OF ILLINOIS
DEPARTMENT OF TRANSPORTATION

SOUTH MATTIS AVENUE
DETENTION OUTLET STRUCTURE DETAILS

SCALE: N/A | SHEET 1 OF 1 SHEETS | DETENTION OUTLET-1

F.A.U. RTE.	SECTION	COUNTY	TOTAL SHEETS	SHEET NO.
7159	19-000314-00-PV	CHAMPAIGN	197	123
		CONTRACT NO. 91642		
		ILLINOIS	FED. AID PROJECT	

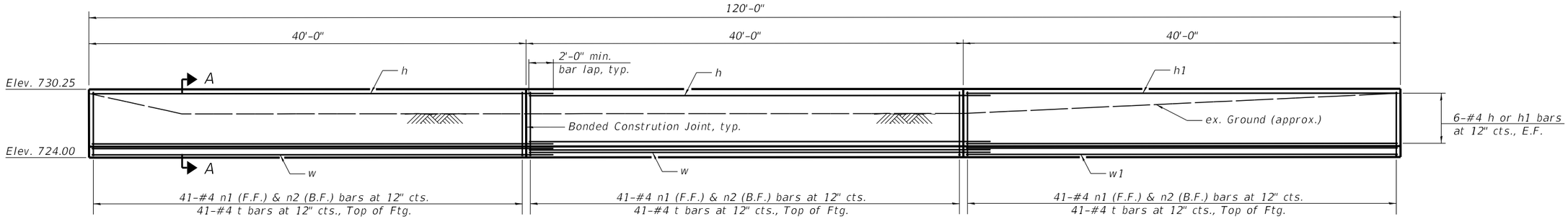

ELEVATION VIEW

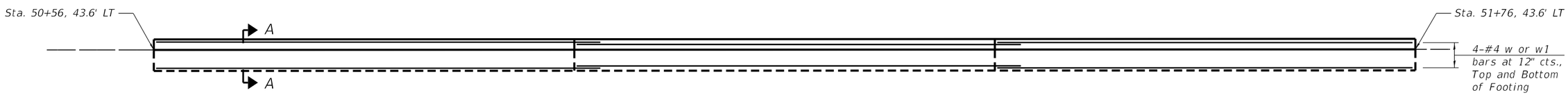

PLAN VIEW

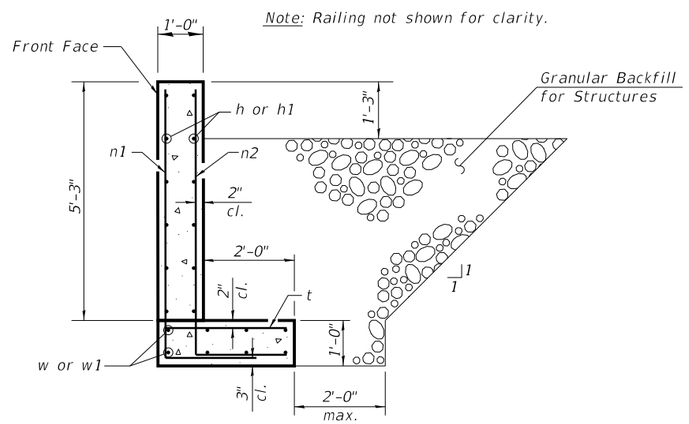

SECTION A-A

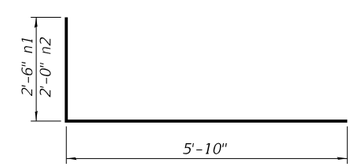

BAR n1 or n2

INDEX OF SHEETS

1. Retaining Wall
2. Pedestrian Railing Details

DESIGN STRESSES

f'c = 3,500 psi
fy = 60,000 psi (Reinf.)

BILL OF MATERIAL

Bar	No.	Size	Length	Shape
h	24	#4	42'-0"	
h1	12	#4	39'-8"	
n1	123	#4	8'-4"	
n2	123	#4	7'-10"	
t	123	#4	2'-6"	
w1	16	#4	42'-0"	
w2	8	#4	39'-8"	
Concrete Structures			Cu. Yd.	36.7
Reinforcement Bars			Pound	3,190
Granular Backfill for Structures			Cu. Yd.	120

LOCHMUELLER GROUP
201 West Springfield Avenue, Suite 1012
Champaign, IL 61820
PHONE: 217.673.7633

USER NAME = Nick.Burrus	DESIGNED - LDG	REVISED -	
	DRAWN - WJS	REVISED -	
PLOT SCALE = 40.0000 ' / in.	CHECKED - ___	REVISED -	
PLOT DATE = 10/1/2025	DATE -	REVISED -	

STATE OF ILLINOIS
DEPARTMENT OF TRANSPORTATION

SOUTH MATTIS AVENUE
RETAINING WALL

SCALE: N/A | SHEET 1 OF 2 SHEETS | RETAINING WALL - 1

F.A.U. RTE.	SECTION	COUNTY	TOTAL SHEETS	SHEET NO.
7159	19-000314-00-PV	CHAMPAIGN	197	124

CONTRACT NO. 91642

ILLINOIS | FED. AID PROJECT

MODEL: Retaining Wall
FILE NAME: X:\ProductionFiles\2021\21-1003\CADD\CADD Sheets\21-1885 Mattis Ave - SH-Box Culverts.dgn

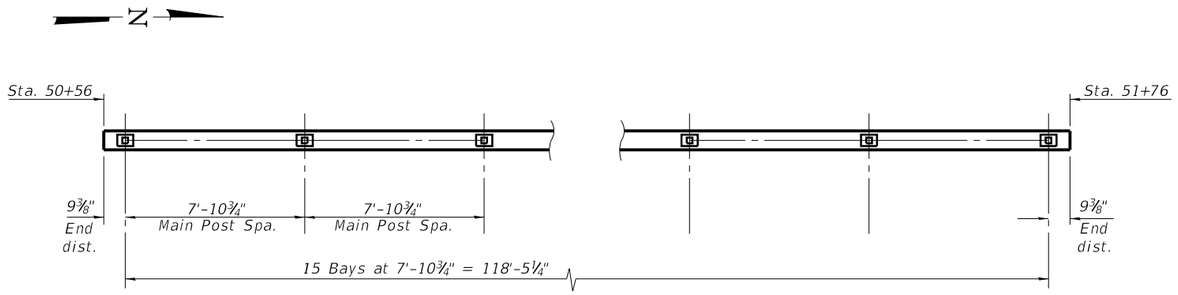

PLAN VIEW

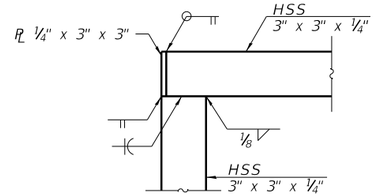

DETAIL A

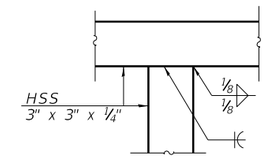

DETAIL B

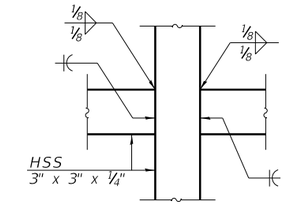

DETAIL C

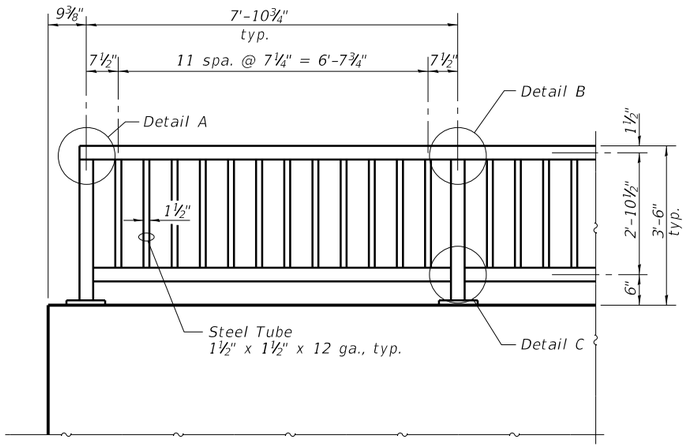

TYPICAL BAY RAILING DETAIL

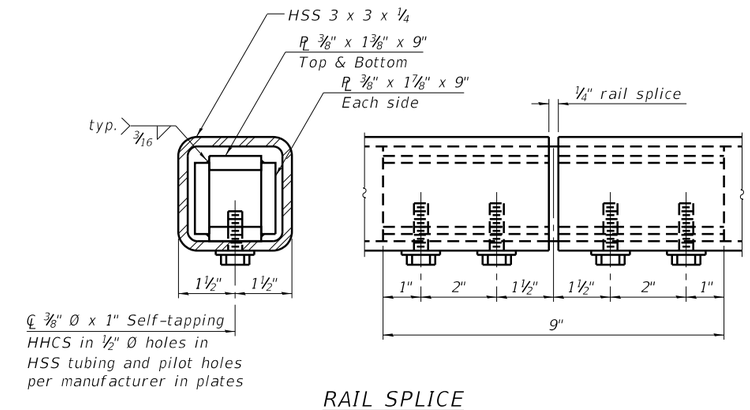

RAIL SPLICE

NOTES

Railing shall be according to Section 509 of the Standard Specifications, except as noted, and will be paid for at the Contract Unit Price per foot for Pedestrian Railing.

Hollow structural sections shall conform to the requirements of ASTM designation A 500, Grade B, structural steel tubing.

All other steel shapes and plates shall conform to the requirements of AASHTO M 270 Grade 36.

CVN testing is not required for the HSS tubing used in the Pedestrian Railing.

All heavy hex nuts shall be according to ASTM A 563 grade DH.

All fully threaded anchor rods shall be ASTM F1554 grade 105.

The post base plate shall be fastened to the wall snug tight and given an additional ⅛" turn.

Rail splice inserts may be built out of bent plates of the same thicknesses and outside geometry limits as the 4-plate rail splice inserts shown.

Space reinforcement to miss anchor rods.

All posts, railing, splices, anchor devices, and bent plates shall be galvanized and painted. Galvanizing shall be according to Article 509.05 of the Standard Specifications. See Special Provisions.

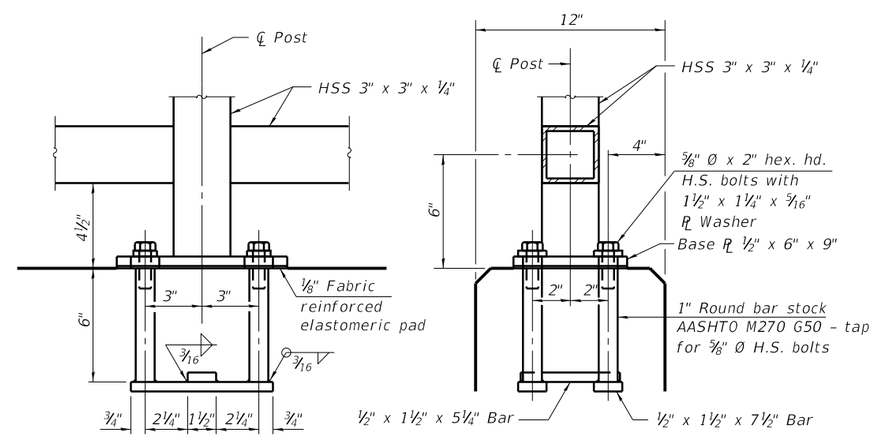

ANCHOR BOLT DETAILS

In lieu of the cast-in-place anchor device shown, the Contractor has the option of drilling and setting ⅝" Ø fully threaded anchor rods with the same plate washers as specified above and heavy hex lock nuts according to Article 509.06 of the Standard Specifications. Embedment shall be according to the manufacturer's specifications.

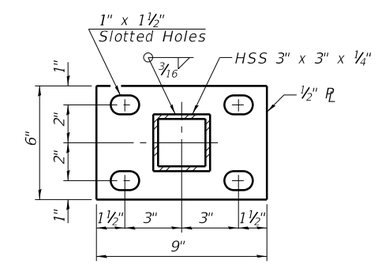

BASE PL
(7 req'd.)

BILL OF MATERIAL

Item	Unit	Quantity
Pedestrian Railing	Foot	120

MODEL: Retaining Wall - Railing
FILE NAME: X:\Production\Files\2021\421-1003\CADD\CADD Sheets\21-1885 Mollis Ave - slit-Box Culverts.dgn

LOCHMUELLER GROUP
201 West Springfield Avenue, Suite 1012
Champaign, IL 61820
PHONE: 217.673.7633

USER NAME = Nick.Burrus	DESIGNED - LDG	REVISED -	
	DRAWN - WJS	REVISED -	
PLOT SCALE = 40.0000 ' / in.	CHECKED - ___	REVISED -	
PLOT DATE = 10/1/2025	DATE -	REVISED -	

STATE OF ILLINOIS
DEPARTMENT OF TRANSPORTATION

PEDESTRIAN RAILING DETAILS
RETAINING WALL

SCALE: N/A | SHEET 2 OF 2 SHEETS | RETAINING WALL - 2

F.A.U. RTE.	SECTION	COUNTY	TOTAL SHEETS	SHEET NO.
7159	19-000314-00-PV	CHAMPAIGN	197	125
		CONTRACT NO. 91642		
		ILLINOIS FED. AID PROJECT		

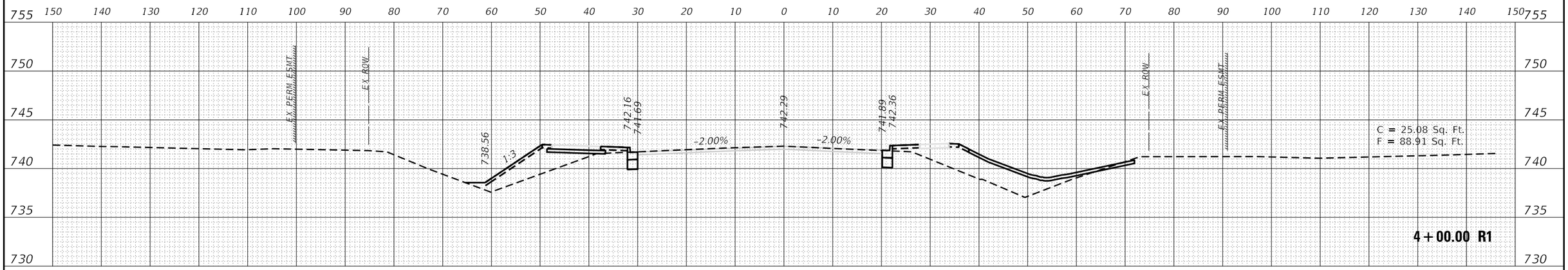

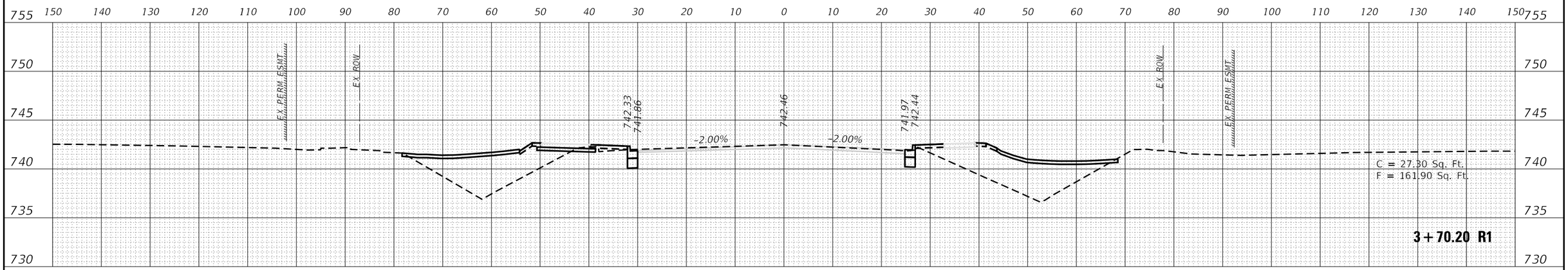

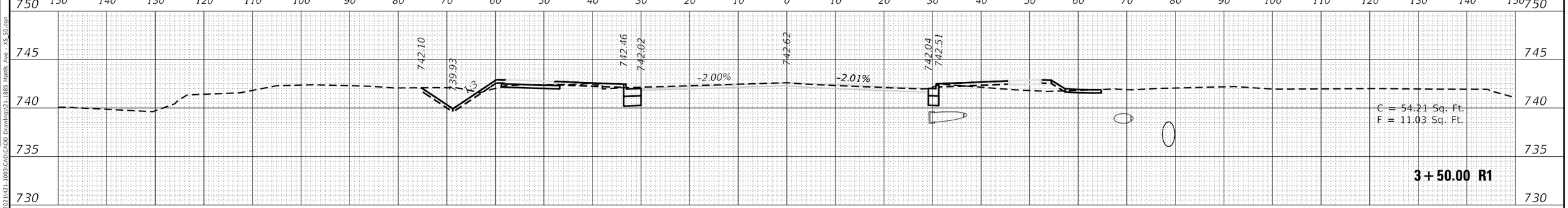

USER NAME = Nick.Burrus	DESIGNED -	REVISED -	
	DRAWN -	REVISED -	
PLOT SCALE = 20.0000 ' / in.	CHECKED -	REVISED -	
PLOT DATE = 10/1/2025	DATE -	REVISED -	

STATE OF ILLINOIS
DEPARTMENT OF TRANSPORTATION

MATTIS AVE.
CROSS SECTIONS

SCALE: | SHEET OF SHEETS | STA. 3+50.00 R1 TO STA. 4+00.00 R1

F.A. RTE.	SECTION	COUNTY	TOTAL SHEETS	SHEET NO.
7159	19-000314-00-PV	CHAMPAIGN	197	126
		CONTRACT NO. 91642		
		ILLINOIS FED. AID PROJECT		

FINAL SURVEY | NOTE BOOK NO. | SURVEYED | PLOTTED | TEMPLATE | AREAS | AREAS CHECKED | BY | DATE

ORIGINAL SURVEY | NOTE BOOK NO. | SURVEYED | PLOTTED | TEMPLATE | AREAS | AREAS CHECKED | BY | DATE

MODEL: PR_MattisREV9_23_25
FILE NAME: X:\Production\files\2021\421-1003\CAD\CADD Drawings\21-1885 Mattis Ave - XS 30.dgn

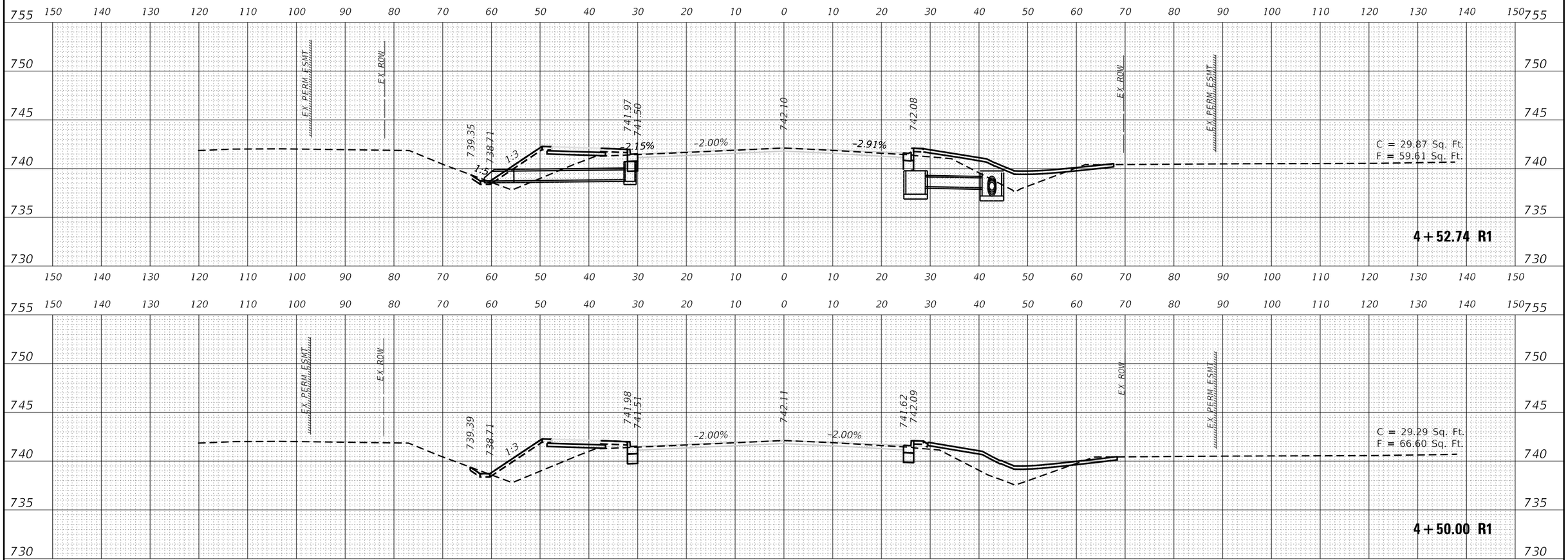

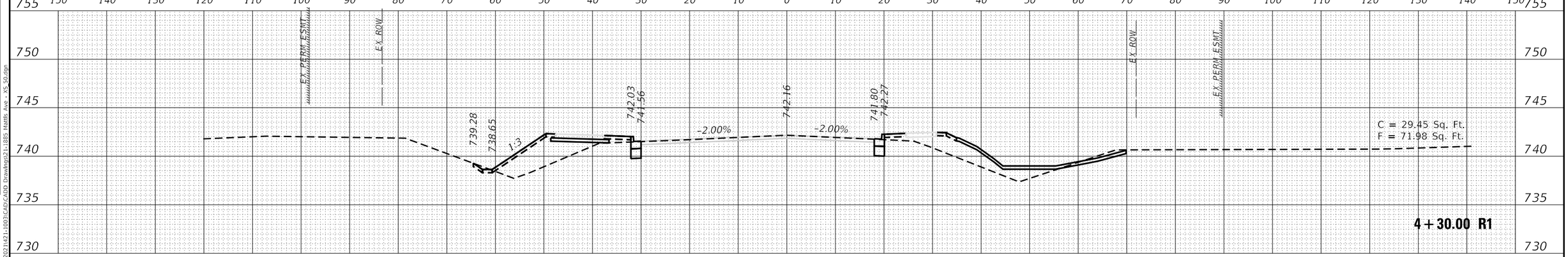

FINAL SURVEY		BY	DATE
NOTE BOOK	SURVEYED		
	PLOTTED		
	TEMPLATE		
	AREAS		
NO.	AREAS CHECKED		

ORIGINAL SURVEY		BY	DATE
NOTE BOOK	SURVEYED		
	PLOTTED		
	TEMPLATE		
	AREAS		
NO.	AREAS CHECKED		

MODEL: PR_MattisREV9_23_25
FILE NAME: X:\Production\Files\2021\21-1003\CAD\CADD Drawings\21-1885 Mattis Ave - XS 30.dgn

USER NAME = Nick.Burrus	DESIGNED -	REVISED -
	DRAWN -	REVISED -
PLOT SCALE = 20.0000 ' / in.	CHECKED -	REVISED -
PLOT DATE = 10/1/2025	DATE -	REVISED -

STATE OF ILLINOIS
DEPARTMENT OF TRANSPORTATION

MATTIS AVE.
CROSS SECTIONS

SCALE: | SHEET OF SHEETS | STA. 4+30.00 R1 TO STA. 4+52.74 R1

F.A. RTE.	SECTION	COUNTY	TOTAL SHEETS	SHEET NO.
7159	19-000314-00-PV	CHAMPAIGN	197	127
		CONTRACT NO. 91642		
		ILLINOIS FED. AID PROJECT		

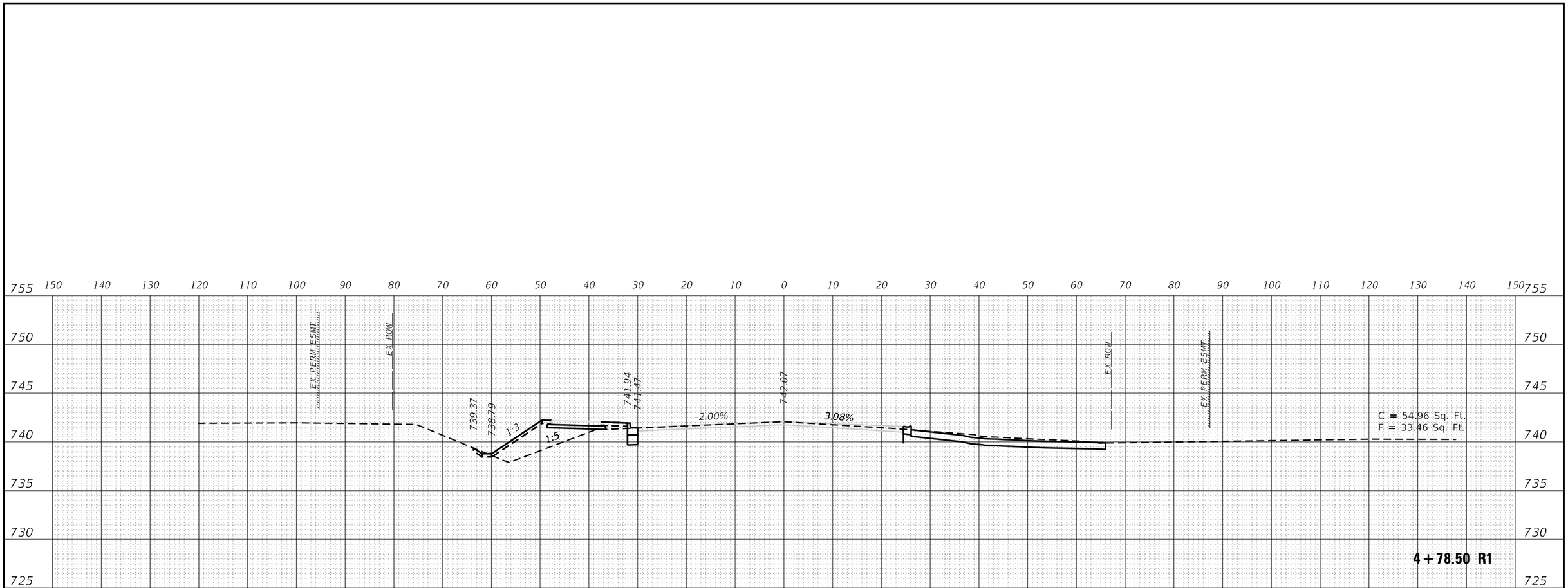

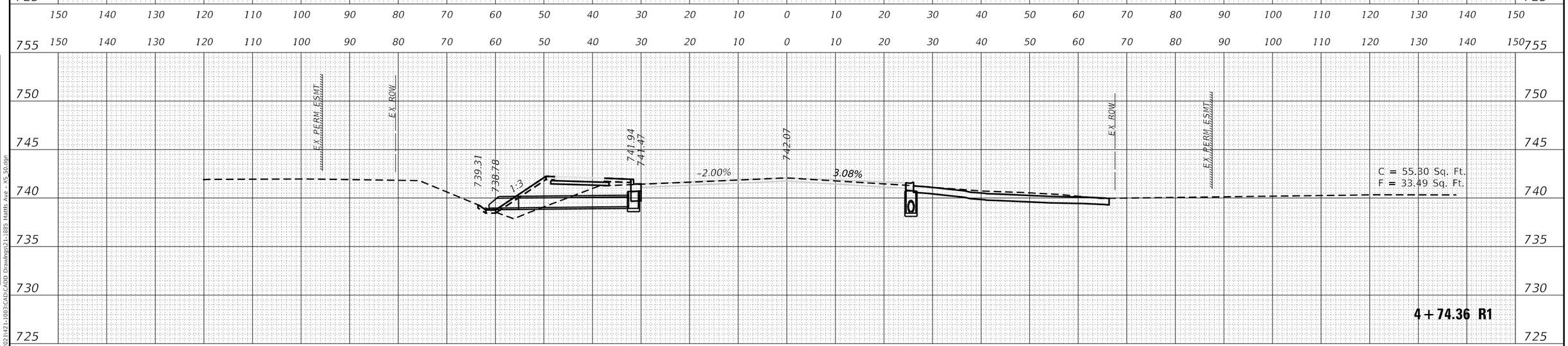

FINAL SURVEY	BY	DATE
SURVEYED		
PLOTTED		
TEMPLATE		
AREAS		
AREAS CHECKED		
NOTE BOOK		
NO.		

ORIGINAL SURVEY	BY	DATE
SURVEYED		
PLOTTED		
TEMPLATE		
AREAS		
AREAS CHECKED		
NOTE BOOK		
NO.		

MODEL: PB_MattisREV9_23_25
FILE NAME: X:\Production\Files\2021\21-1083\CAD\CADD Drawings\21-1885 Mattis Ave - XS 50.dgn

USER NAME = Nick.Burrus	DESIGNED -	REVISED -
	DRAWN -	REVISED -
PLOT SCALE = 20.0000 ' / in.	CHECKED -	REVISED -
PLOT DATE = 10/1/2025	DATE -	REVISED -

STATE OF ILLINOIS
DEPARTMENT OF TRANSPORTATION

MATTIS AVE.
CROSS SECTIONS

SCALE: | SHEET OF SHEETS | STA. 4+74.36 R1 TO STA. 4+78.50 R1

F.A. RTE.	SECTION	COUNTY	TOTAL SHEETS	SHEET NO.
7159	19-000314-00-PV	CHAMPAIGN	197	128
		CONTRACT NO. 91642		
		ILLINOIS	FED. AID PROJECT	

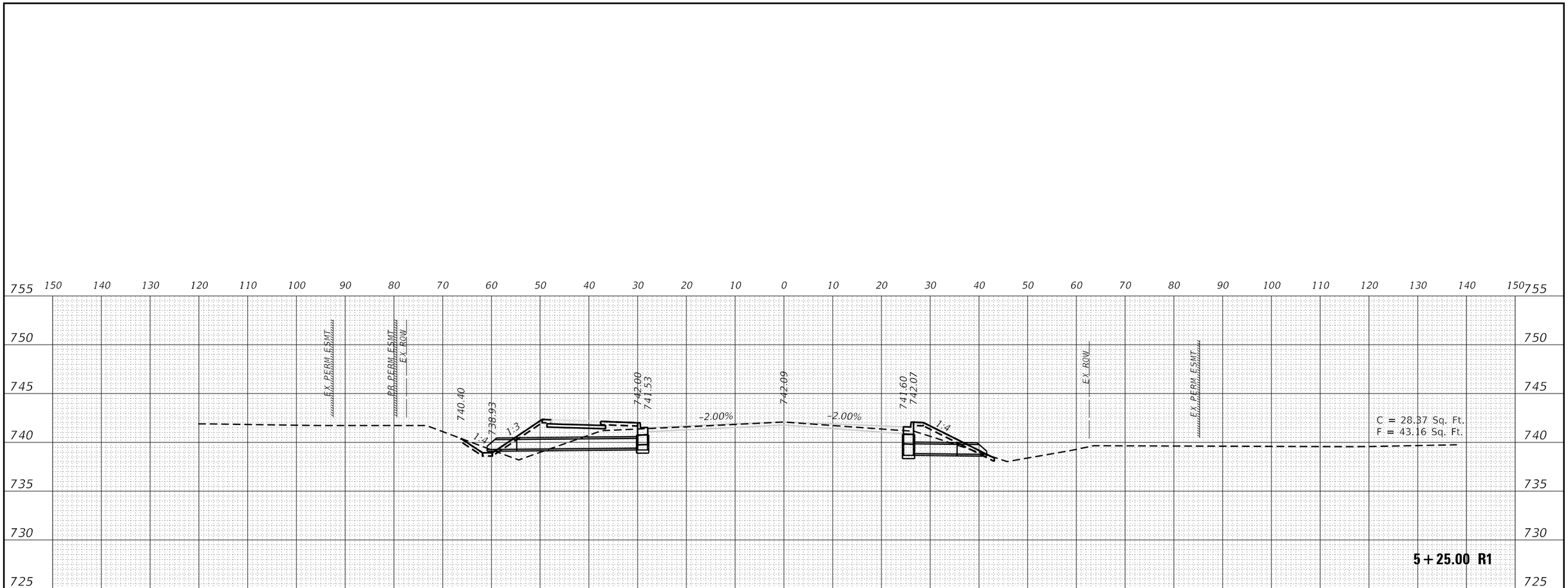

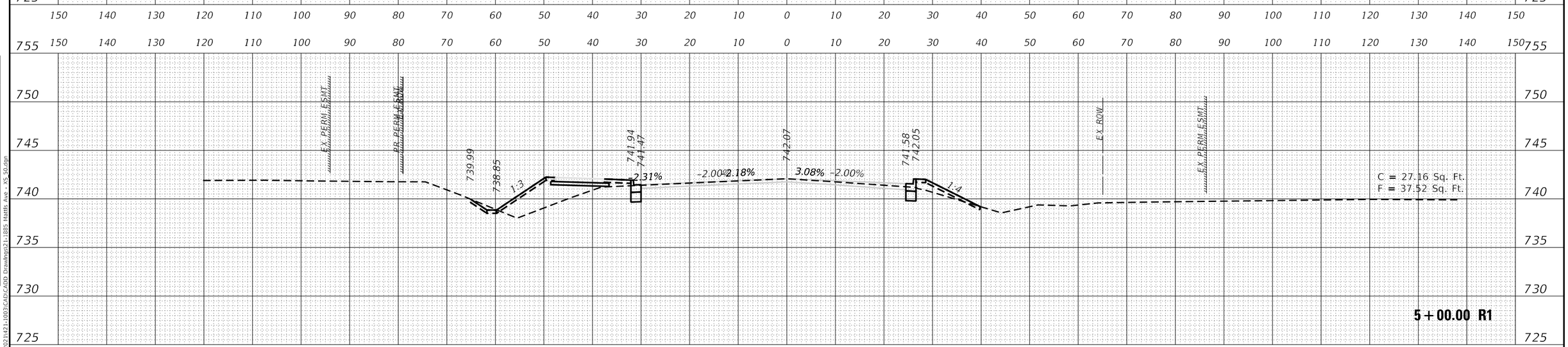

FINAL SURVEY		BY	DATE
NOTE BOOK	SURVEYED		
	PLOTTED		
	TEMPLATE		
	AREAS		
	AREAS CHECKED		
NO.			

ORIGINAL SURVEY		BY	DATE
NOTE BOOK	SURVEYED		
	PLOTTED		
	TEMPLATE		
	AREAS		
	AREAS CHECKED		
NO.			

MODEL: PR_MattisREV9_23_25
FILE NAME: X:\Production\Files\2021\421-1003\CADD Drawings\21-1885 Mattis Ave - XS 50.dgn

USER NAME = Nick.Burrus	DESIGNED -	REVISED -
	DRAWN -	REVISED -
PLOT SCALE = 20.0000 ' / in.	CHECKED -	REVISED -
PLOT DATE = 10/1/2025	DATE -	REVISED -

STATE OF ILLINOIS
DEPARTMENT OF TRANSPORTATION

MATTIS AVE.
CROSS SECTIONS

SCALE: | SHEET OF SHEETS | STA. 5+00.00 R1 TO STA. 5+25.00 R1

F.A. RTE.	SECTION	COUNTY	TOTAL SHEETS	SHEET NO.
7159	19-000314-00-PV	CHAMPAIGN	197	129
		CONTRACT NO. 91642		
		ILLINOIS	FED. AID PROJECT	

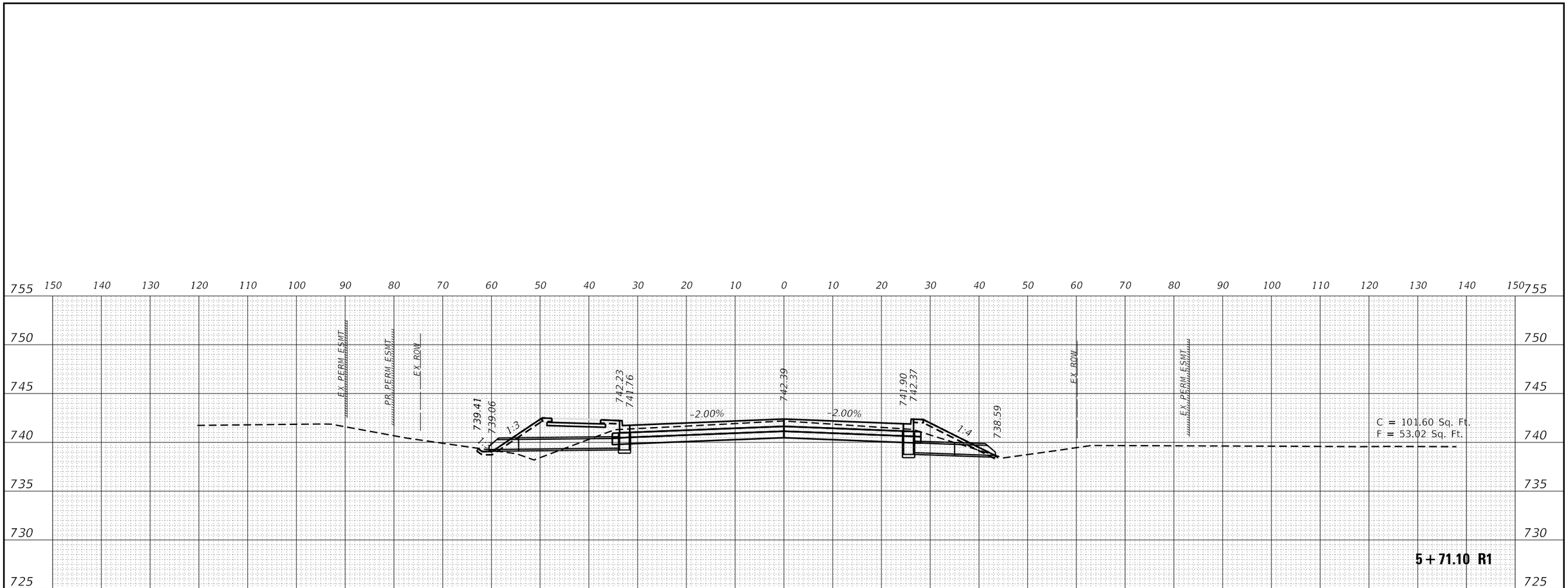

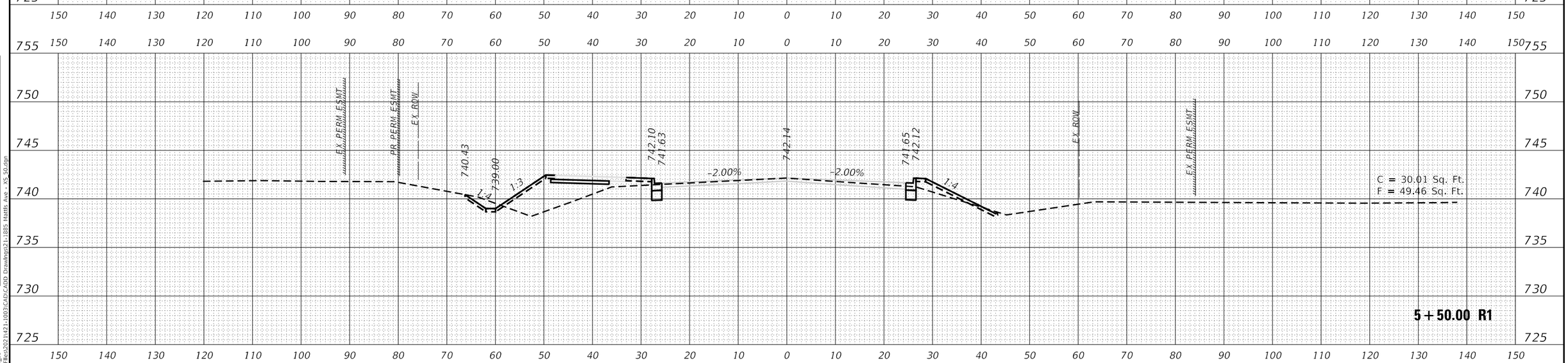

FINAL SURVEY		BY	DATE
NOTE BOOK	SURVEYED		
	PLOTTED		
	TEMPLATE		
	AREAS		
	AREAS CHECKED		
NO.			

ORIGINAL SURVEY		BY	DATE
NOTE BOOK	SURVEYED		
	PLOTTED		
	TEMPLATE		
	AREAS		
	AREAS CHECKED		
NO.			

MODEL: PR_MattisREV9_23_25
FILE NAME: X:\Production\Files\2021\421-1003\CADD Drawings\21-188S Mattis Ave - XS 50.dgn

USER NAME = Nick.Burrus	DESIGNED -	REVISED -
	DRAWN -	REVISED -
PLOT SCALE = 20.0000 ' / in.	CHECKED -	REVISED -
PLOT DATE = 10/1/2025	DATE -	REVISED -

STATE OF ILLINOIS
DEPARTMENT OF TRANSPORTATION

MATTIS AVE.
CROSS SECTIONS

SCALE: | SHEET OF SHEETS | STA. 5+50.00 R1 TO STA. 5+71.10 R1

F.A. RTE.	SECTION	COUNTY	TOTAL SHEETS	SHEET NO.
7159	19-000314-00-PV	CHAMPAIGN	197	130
		CONTRACT NO. 91642		
		ILLINOIS	FED. AID PROJECT	

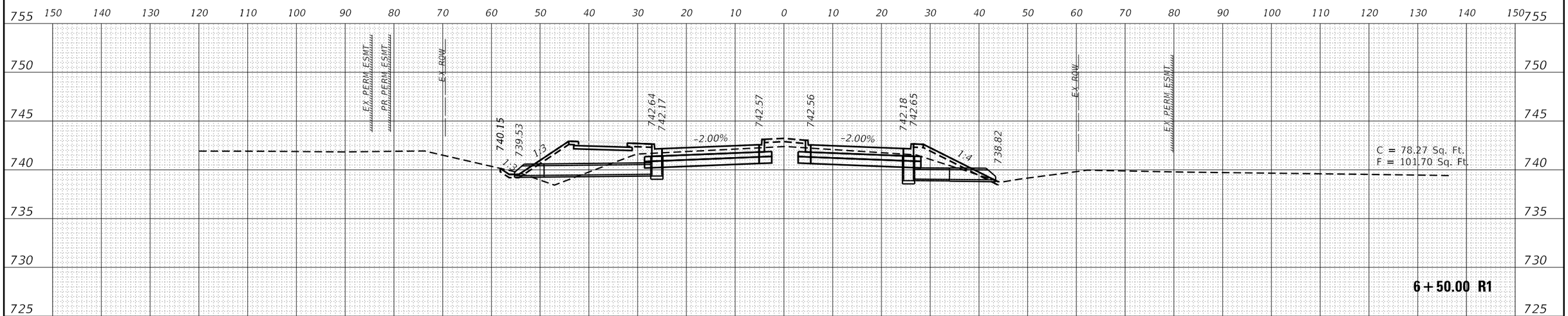

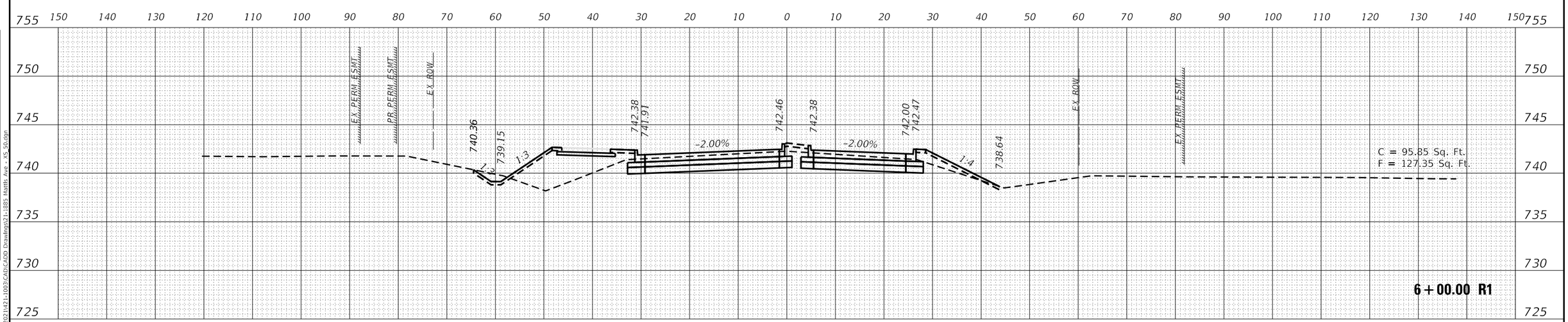

FINAL SURVEY	BY	DATE
SURVEYED		
PLOTTED		
TEMPLATE		
AREAS		
AREAS CHECKED		
NOTE BOOK NO.		

ORIGINAL SURVEY	BY	DATE
SURVEYED		
PLOTTED		
TEMPLATE		
AREAS		
AREAS CHECKED		
NOTE BOOK NO.		

MODEL: PR_MattisREV9_23_25
FILE NAME: X:\Production\Files\2021\421-1003\CAD\CADD Drawings\21-1885 Mattis Ave - XS 50.dgn

USER NAME = Nick.Burrus	DESIGNED -	REVISED -
	DRAWN -	REVISED -
PLOT SCALE = 20.0000 ' / in.	CHECKED -	REVISED -
PLOT DATE = 10/1/2025	DATE -	REVISED -

STATE OF ILLINOIS
DEPARTMENT OF TRANSPORTATION

MATTIS AVE.
CROSS SECTIONS

SCALE: | SHEET OF SHEETS | STA. 6+00.00 R1 TO STA. 6+50.00 R1

F.A. RTE.	SECTION	COUNTY	TOTAL SHEETS	SHEET NO.
7159	19-000314-00-PV	CHAMPAIGN	197	131
		CONTRACT NO. 91642		
		ILLINOIS	FED. AID PROJECT	

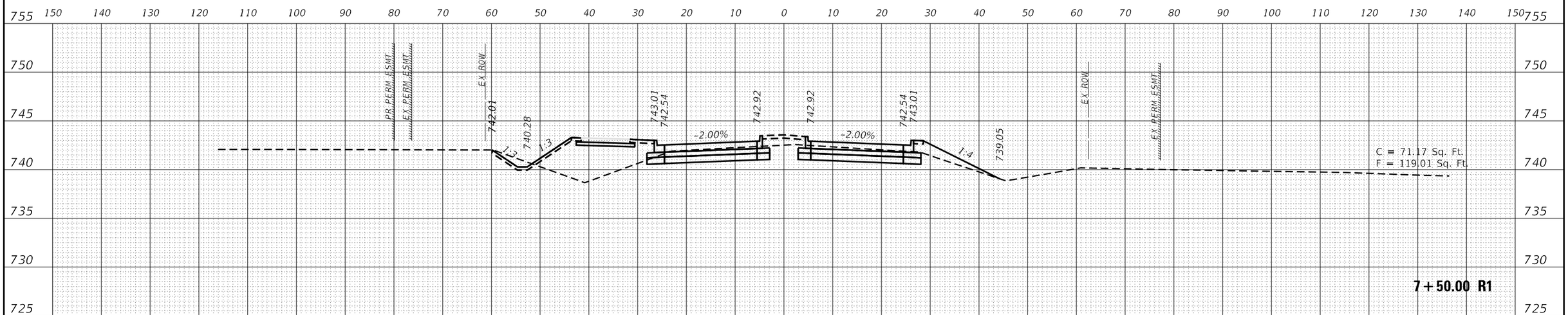

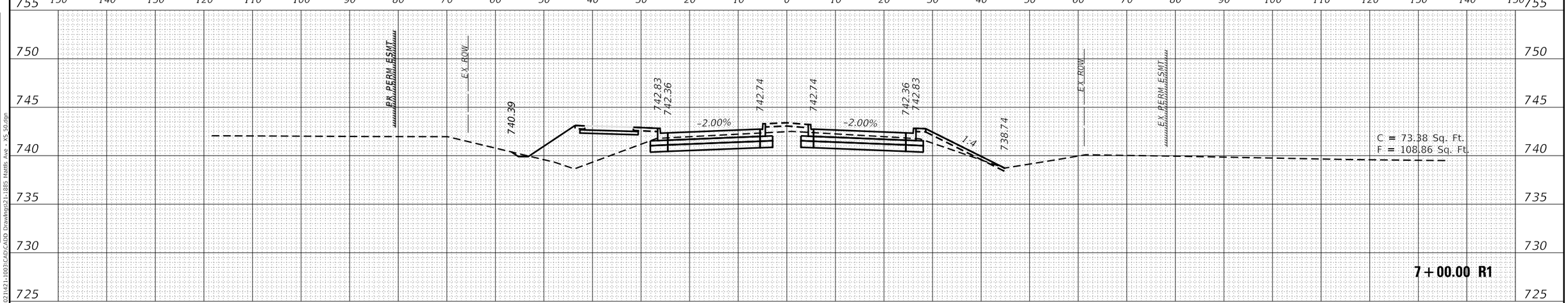

FINAL SURVEY		BY	DATE
NOTE BOOK	SURVEYED		
	PLOTTED		
	TEMPLATE		
	AREAS		
NO.	AREAS CHECKED		

ORIGINAL SURVEY		BY	DATE
NOTE BOOK	SURVEYED		
	PLOTTED		
	TEMPLATE		
	AREAS		
NO.	AREAS CHECKED		

MODEL: PR_MattisREV9_23_25
FILE NAME: X:\Production\Files\2021\21-1093\CADD Drawings\21-1885 Mattis Ave - XS 50.dgn

USER NAME = Nick.Burrus	DESIGNED -	REVISED -
	DRAWN -	REVISED -
PLOT SCALE = 20.0000 ' / in.	CHECKED -	REVISED -
PLOT DATE = 10/1/2025	DATE -	REVISED -

STATE OF ILLINOIS
DEPARTMENT OF TRANSPORTATION

MATTIS AVE.
CROSS SECTIONS

SCALE: | SHEET OF SHEETS | STA. 7+00.00 R1 TO STA. 7+50.00 R1

F.A. RTE.	SECTION	COUNTY	TOTAL SHEETS	SHEET NO.
7159	19-000314-00-PV	CHAMPAIGN	197	132
		CONTRACT NO. 91642		
		ILLINOIS	FED. AID PROJECT	

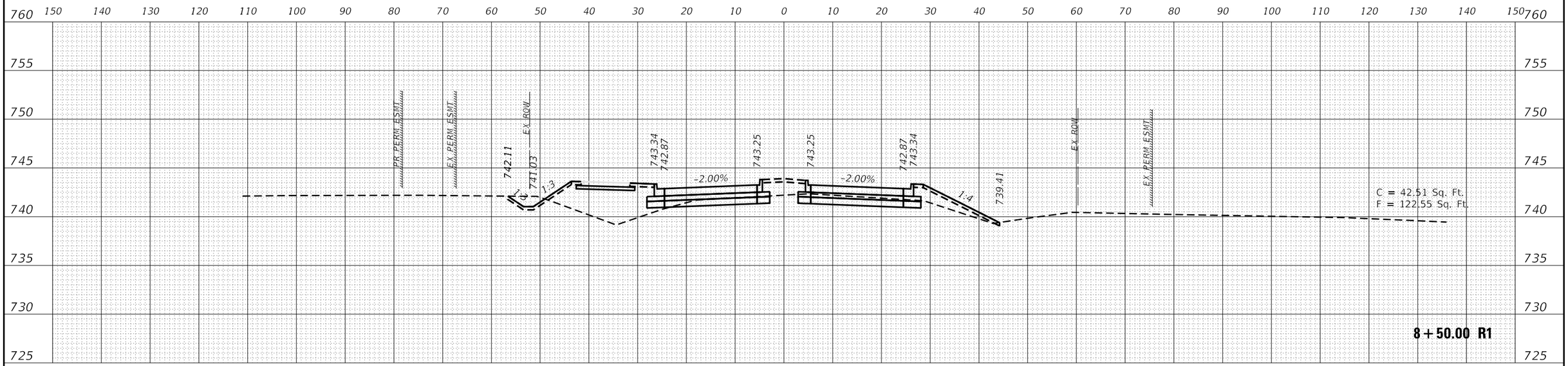

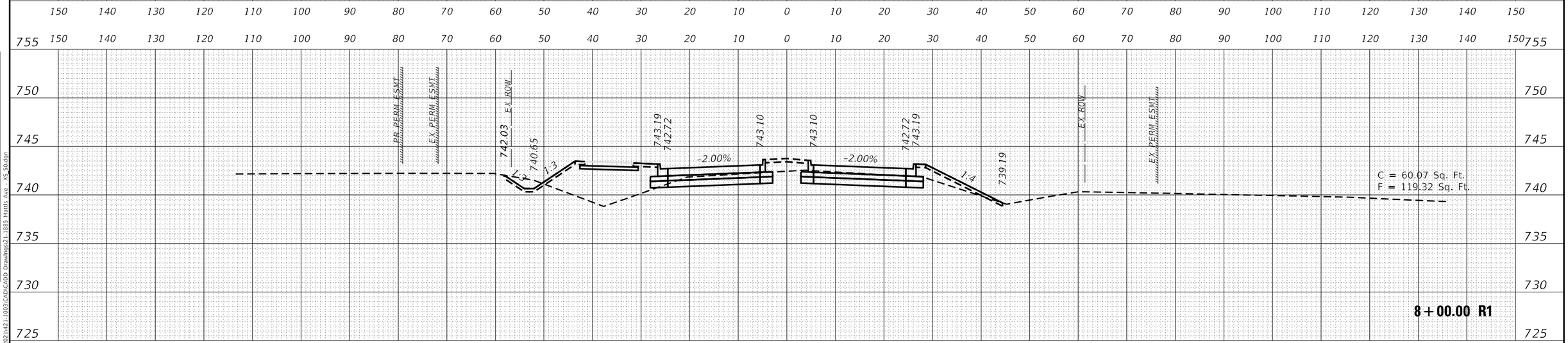

FINAL SURVEY	BY	DATE
SURVEYED		
PLOTTED		
TEMPLATE		
AREAS		
AREAS CHECKED		
NOTE BOOK NO.		

ORIGINAL SURVEY	BY	DATE
SURVEYED		
PLOTTED		
TEMPLATE		
AREAS		
AREAS CHECKED		
NOTE BOOK NO.		

MODEL: PR_MattisREV9_23_25
FILE NAME: X:\Production\Files\2021\421-1003\CADD Drawings\21-188S Mattis Ave - XS 50.dgn

USER NAME = Nick.Burrus	DESIGNED -	REVISED -
	DRAWN -	REVISED -
PLOT SCALE = 20.0000 ' / in.	CHECKED -	REVISED -
PLOT DATE = 10/1/2025	DATE -	REVISED -

STATE OF ILLINOIS
DEPARTMENT OF TRANSPORTATION

MATTIS AVE.
CROSS SECTIONS

SCALE: | SHEET OF SHEETS | STA. 8+00.00 R1 TO STA. 8+50.00 R1

F.A. RTE.	SECTION	COUNTY	TOTAL SHEETS	SHEET NO.
7159	19-000314-00-PV	CHAMPAIGN	197	133
		CONTRACT NO. 91642		
		ILLINOIS	FED. AID PROJECT	

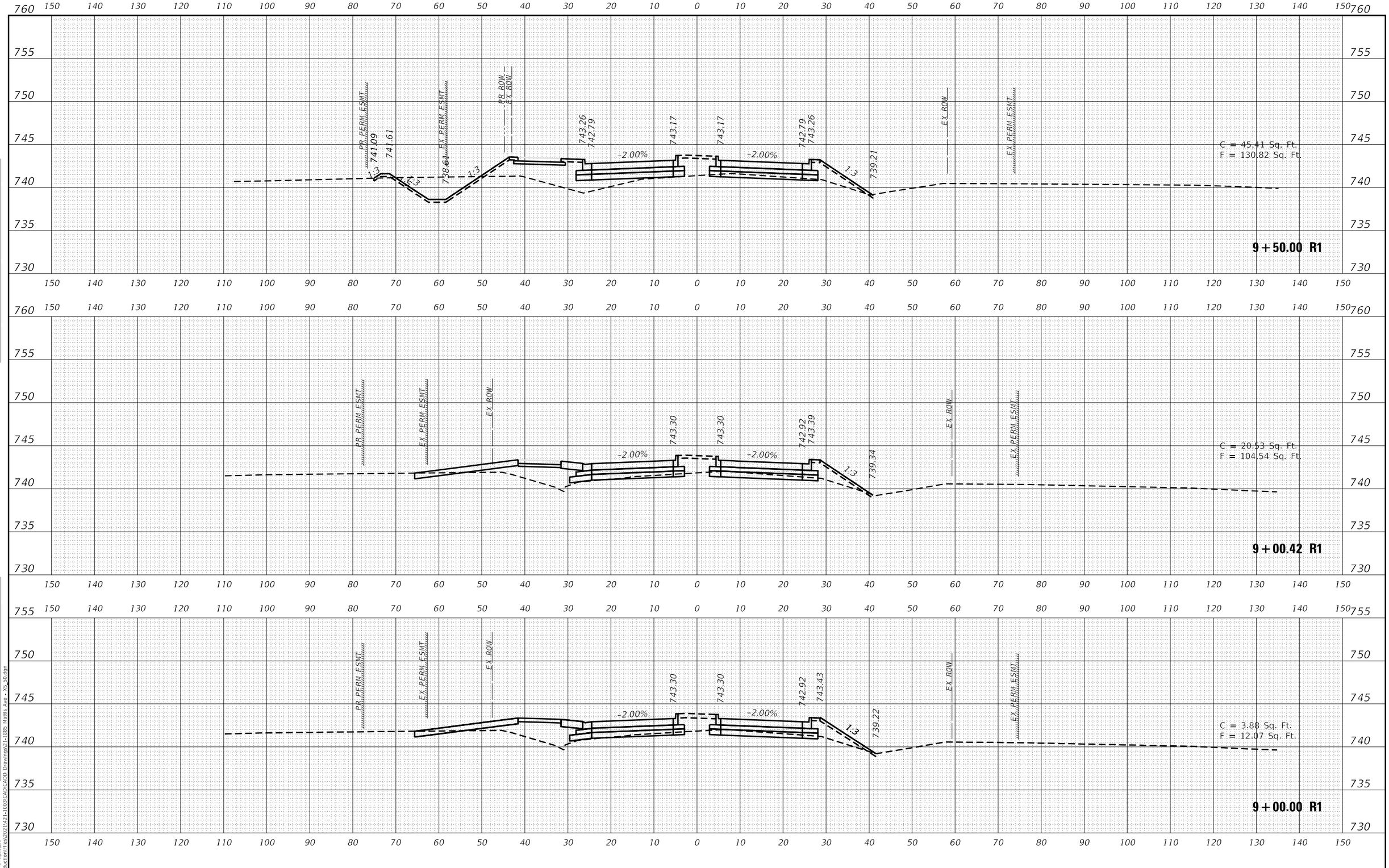

FINAL SURVEY		BY	DATE
NOTE BOOK	SURVEYED		
	PLOTTED		
	TEMPLATE		
	AREAS		
	AREAS CHECKED		
NO.	REMARKS		

ORIGINAL SURVEY		BY	DATE
NOTE BOOK	SURVEYED		
	PLOTTED		
	TEMPLATE		
	AREAS		
	AREAS CHECKED		
NO.	REMARKS		

MODEL: PR_MattisREV9_23_25
FILE NAME: X:\Production\Files\2021\21-1003\CADD Drawings\21-1003 Mattis Ave - XS 50.dgn

USER NAME = Nick.Burrus	DESIGNED -	REVISED -	
	DRAWN -	REVISED -	
PLOT SCALE = 20.0000 ' / in.	CHECKED -	REVISED -	
PLOT DATE = 10/1/2025	DATE -	REVISED -	

STATE OF ILLINOIS
DEPARTMENT OF TRANSPORTATION

MATTIS AVE.
CROSS SECTIONS

SCALE: | SHEET OF SHEETS | STA. 9+00.00 R1 TO STA. 9+50.00 R1

F.A. RTE.	SECTION	COUNTY	TOTAL SHEETS	SHEET NO.
7159	19-000314-00-PV	CHAMPAIGN	197	134
		CONTRACT NO. 91642		
		ILLINOIS	FED. AID PROJECT	

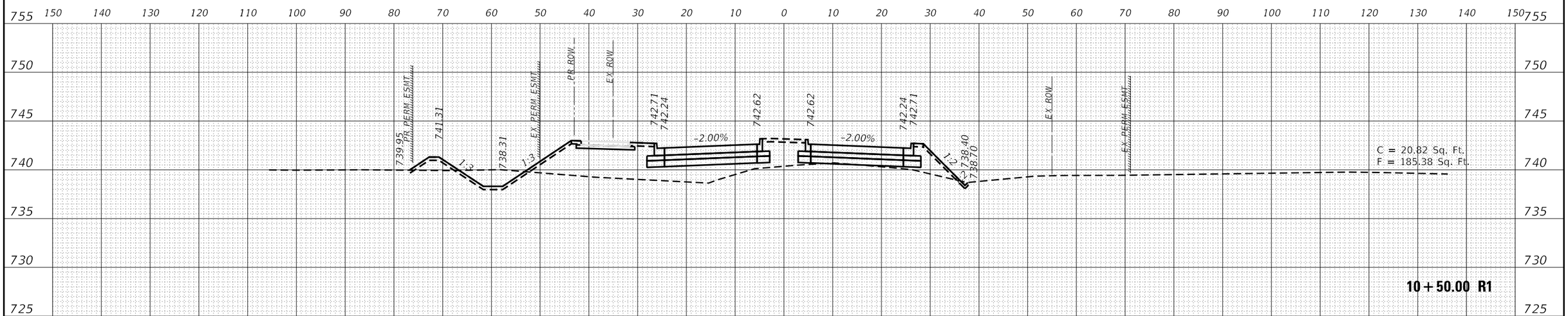

FINAL SURVEY		BY	DATE
NOTE BOOK	SURVEYED		
	PLOTTED		
	TEMPLATE		
	AREAS		
NO.	AREAS CHECKED		

ORIGINAL SURVEY		BY	DATE
NOTE BOOK	SURVEYED		
	PLOTTED		
	TEMPLATE		
	AREAS		
NO.	AREAS CHECKED		

MODEL: PR_MattisREV9_23_25
FILE NAME: X:\Production\Files\2021\21-1003\CADD Drawings\21-1885 Mattis Ave - XS 50.dgn

USER NAME = Nick.Burrus	DESIGNED -	REVISED -
	DRAWN -	REVISED -
PLOT SCALE = 20.0000 ' / in.	CHECKED -	REVISED -
PLOT DATE = 10/1/2025	DATE -	REVISED -

STATE OF ILLINOIS
DEPARTMENT OF TRANSPORTATION

MATTIS AVE.
CROSS SECTIONS

SCALE: | SHEET OF SHEETS | STA. 10+00.00 R1 TO STA. 10+50.00 R1

F.A. RTE.	SECTION	COUNTY	TOTAL SHEETS	SHEET NO.
7159	19-000314-00-PV	CHAMPAIGN	197	135
		CONTRACT NO. 91642		
		ILLINOIS	FED. AID PROJECT	

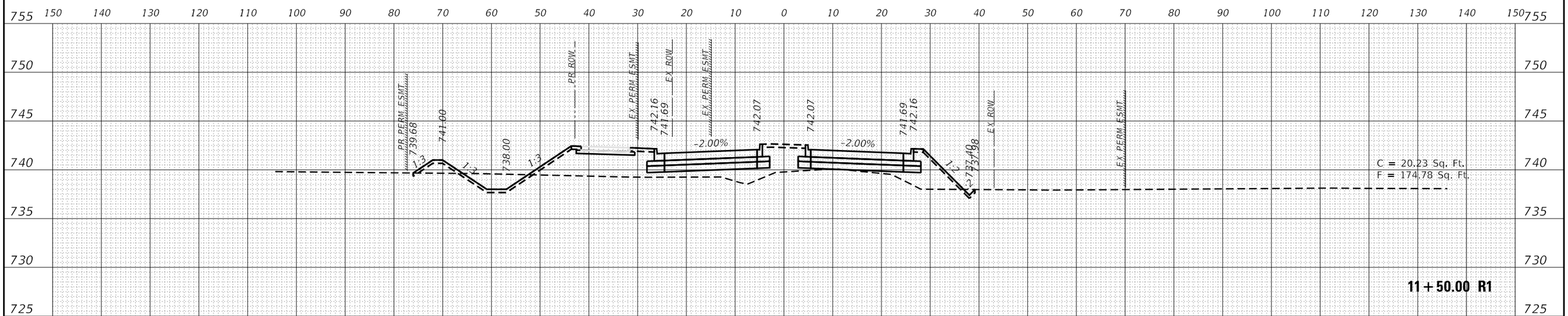

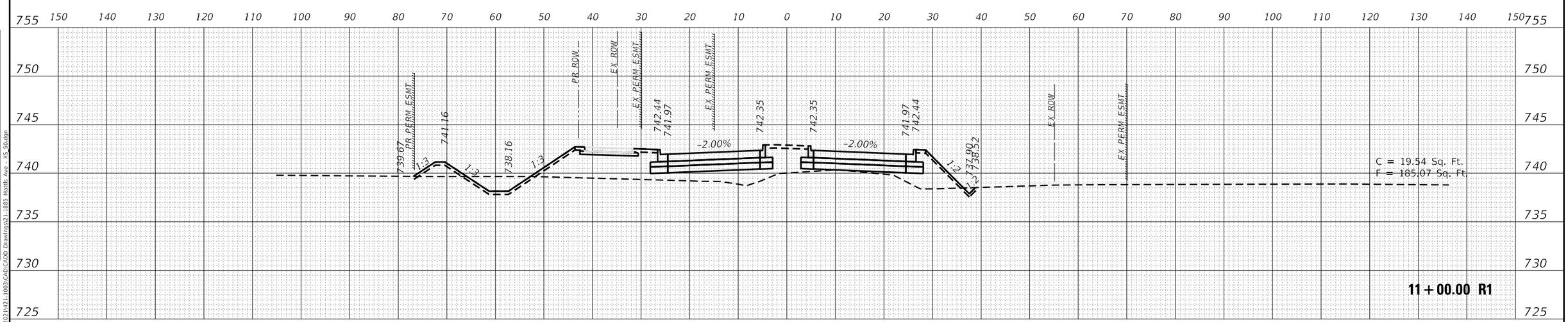

FINAL SURVEY	BY	DATE
SURVEYED		
PLOTTED		
TEMPLATE		
AREAS		
AREAS CHECKED		
NOTE BOOK NO.		

ORIGINAL SURVEY	BY	DATE
SURVEYED		
PLOTTED		
TEMPLATE		
AREAS		
AREAS CHECKED		
NOTE BOOK NO.		

MODEL: PR_MattisREV9_23_25
FILE NAME: X:\Production\Files\2021\21-1003\CADD Drawings\21-1885 Mattis Ave - XS 50.dgn

USER NAME = Nick.Burrus	DESIGNED -	REVISED -
	DRAWN -	REVISED -
PLOT SCALE = 20.0000 ' / in.	CHECKED -	REVISED -
PLOT DATE = 10/1/2025	DATE -	REVISED -

STATE OF ILLINOIS
DEPARTMENT OF TRANSPORTATION

MATTIS AVE.
CROSS SECTIONS

SCALE: | SHEET OF SHEETS | STA. 11+00.00 R1 TO STA. 11+50.00 R1

F.A. RTE.	SECTION	COUNTY	TOTAL SHEETS	SHEET NO.
7159	19-000314-00-PV	CHAMPAIGN	197	136
		CONTRACT NO. 91642		
		ILLINOIS	FED. AID PROJECT	

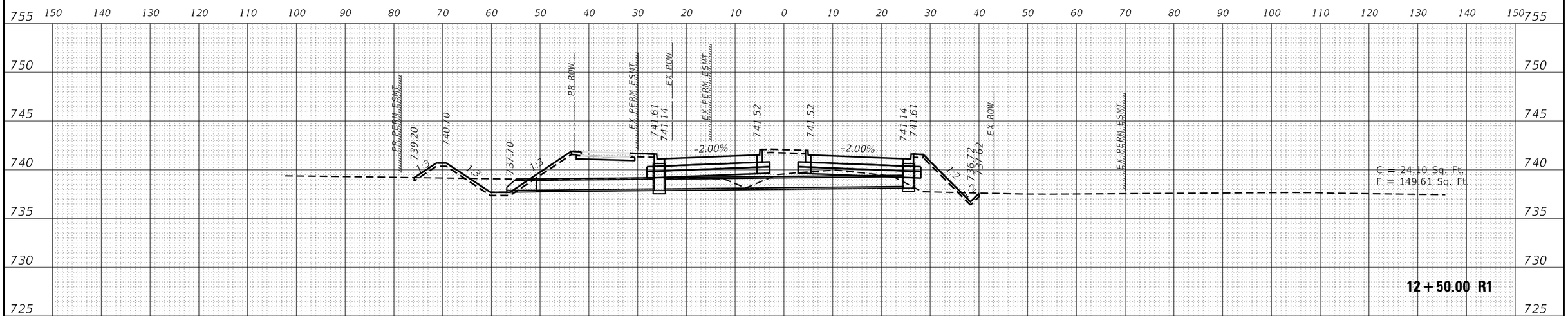

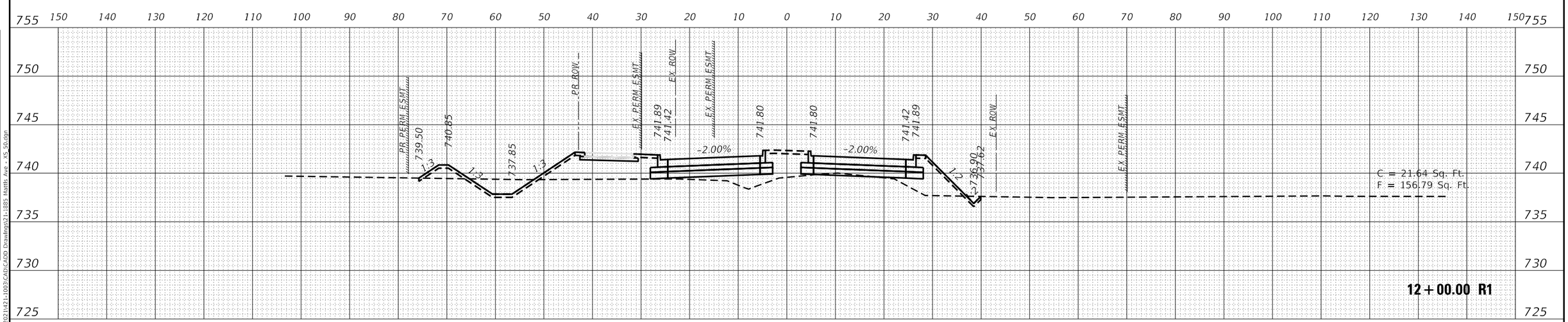

FINAL SURVEY	BY	DATE
SURVEYED		
PLOTTED		
TEMPLATE		
AREAS		
AREAS CHECKED		
NOTE BOOK		
NO.		

ORIGINAL SURVEY	BY	DATE
SURVEYED		
PLOTTED		
TEMPLATE		
AREAS		
AREAS CHECKED		
NOTE BOOK		
NO.		

MODEL: PR_MattisREV9_23_25
FILE NAME: X:\Production\Files\2021\21-1003\CADD Drawings\21-1885 Mattis Ave - XS 50.dgn

USER NAME = Nick.Burrus	DESIGNED -	REVISED -
	DRAWN -	REVISED -
PLOT SCALE = 20.0000 ' / in.	CHECKED -	REVISED -
PLOT DATE = 10/1/2025	DATE -	REVISED -

STATE OF ILLINOIS
DEPARTMENT OF TRANSPORTATION

MATTIS AVE.
CROSS SECTIONS

SCALE: | SHEET OF SHEETS | STA. 12+00.00 R1 TO STA. 12+50.00 R1

F.A. RTE.	SECTION	COUNTY	TOTAL SHEETS	SHEET NO.
7159	19-000314-00-PV	CHAMPAIGN	197	137
		CONTRACT NO. 91642		
		ILLINOIS	FED. AID PROJECT	

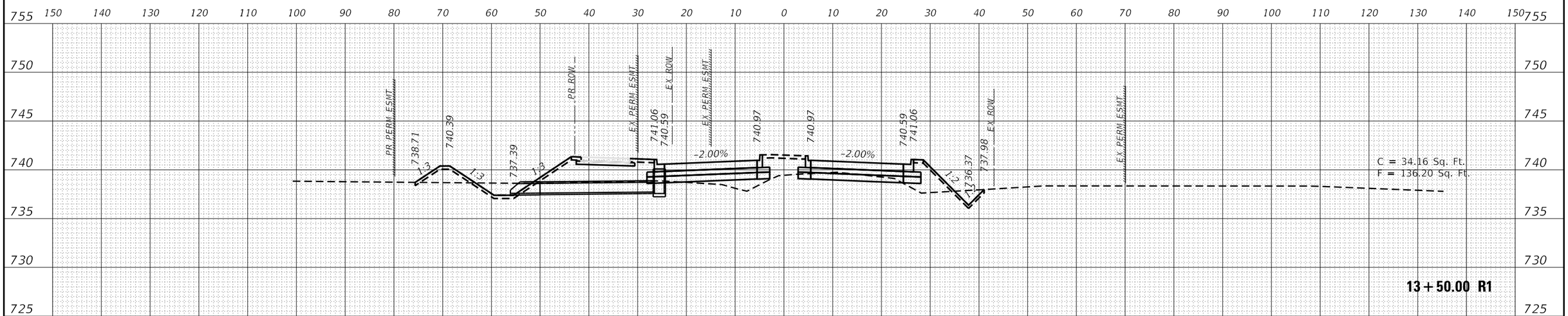

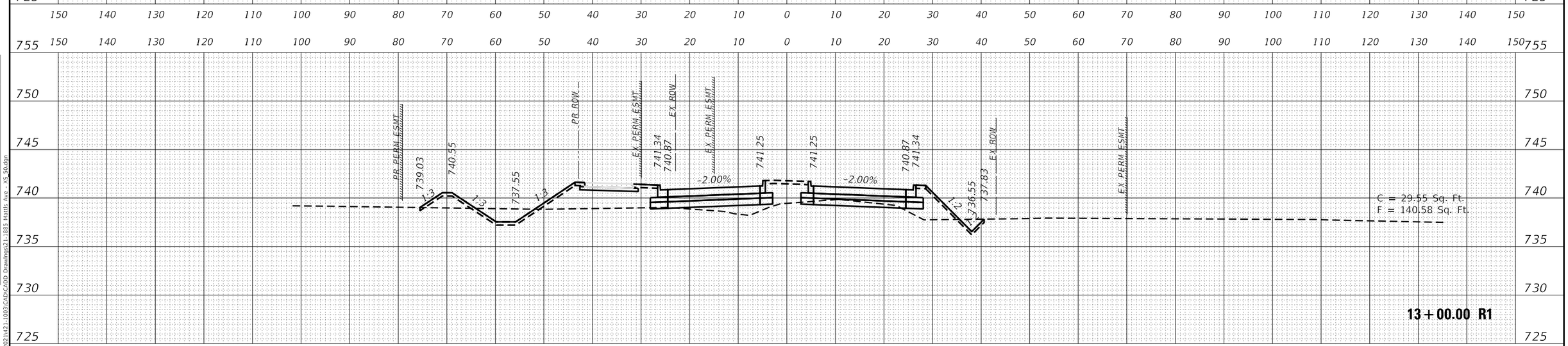

USER NAME = Nick.Burrus	DESIGNED -	REVISED -	
	DRAWN -	REVISED -	
PLOT SCALE = 20.0000 ' / in.	CHECKED -	REVISED -	
PLOT DATE = 10/1/2025	DATE -	REVISED -	

STATE OF ILLINOIS
DEPARTMENT OF TRANSPORTATION

MATTIS AVE.
CROSS SECTIONS

SCALE: SHEET OF SHEETS STA. 13+00.00 R1 TO STA. 13+50.00 R1

F.A. RTE.	SECTION	COUNTY	TOTAL SHEETS	SHEET NO.
7159	19-000314-00-PV	CHAMPAIGN	197	138
		CONTRACT NO. 91642		
		ILLINOIS FED. AID PROJECT		

FINAL SURVEY — NOTE BOOK NO. — SURVEYED — PLOTTED — TEMPLATE — AREAS — AREAS CHECKED — BY — DATE

ORIGINAL SURVEY — NOTE BOOK NO. — SURVEYED — PLOTTED — TEMPLATE — AREAS — AREAS CHECKED — BY — DATE

MODEL: PR_MattisREV9_23_25
FILE NAME: X:\Production\Files\2021\421-1093\CADD Drawings\21-188S Mattis Ave - XS 50.dgn

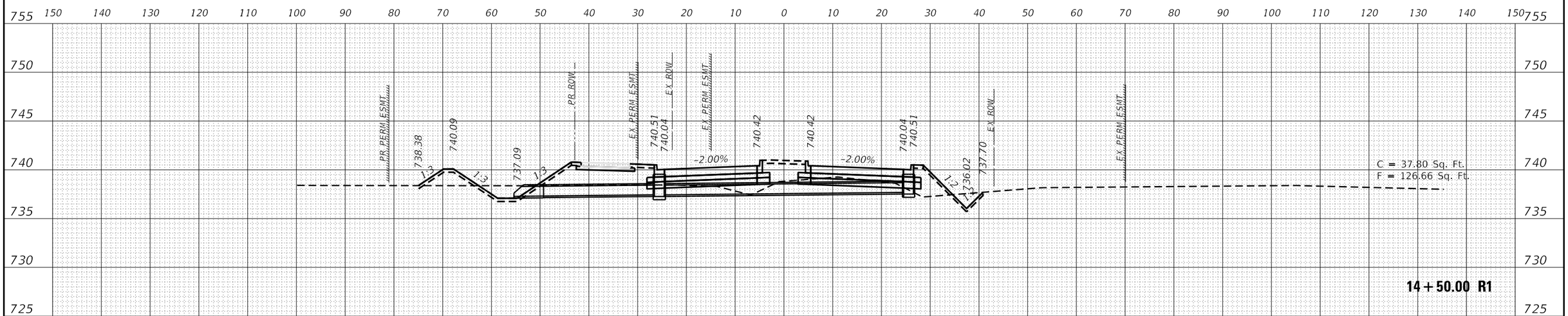

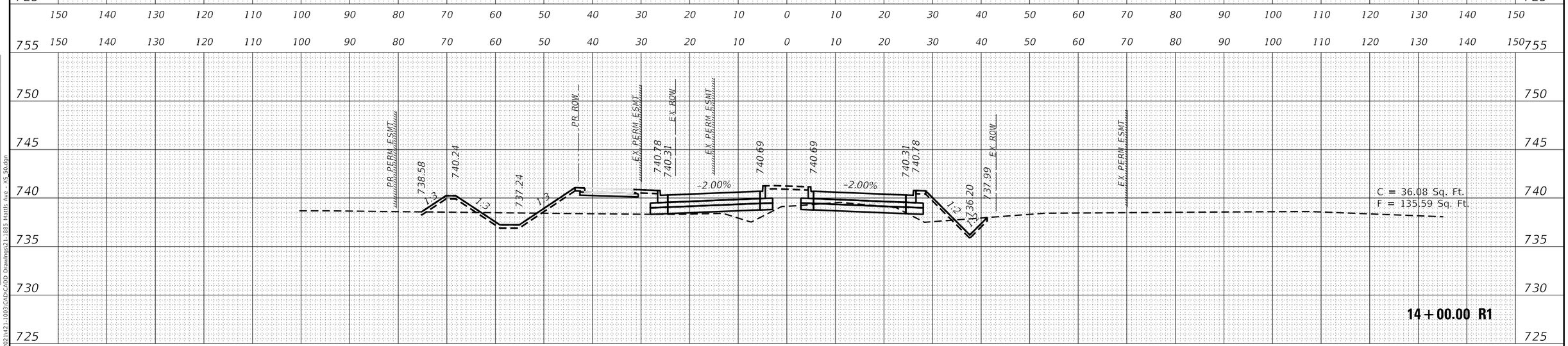

FINAL SURVEY	BY	DATE
SURVEYED		
PLOTTED		
TEMPLATE		
AREAS		
AREAS CHECKED		
NOTE BOOK NO.		

ORIGINAL SURVEY	BY	DATE
SURVEYED		
PLOTTED		
TEMPLATE		
AREAS		
AREAS CHECKED		
NOTE BOOK NO.		

MODEL: PR_MattisREV9_23_25
FILE NAME: X:\Production\Files\2021\421-1003\CADD Drawings\21-1885 Mattis Ave - XS 50.dgn

USER NAME = Nick.Burrus	DESIGNED -	REVISED -
	DRAWN -	REVISED -
PLOT SCALE = 20.0000 ' / in.	CHECKED -	REVISED -
PLOT DATE = 10/1/2025	DATE -	REVISED -

STATE OF ILLINOIS
DEPARTMENT OF TRANSPORTATION

MATTIS AVE.
CROSS SECTIONS

SCALE: | SHEET OF SHEETS | STA. 14+00.00 R1 TO STA. 14+50.00 R1

F.A. RTE.	SECTION	COUNTY	TOTAL SHEETS	SHEET NO.
7159	19-000314-00-PV	CHAMPAIGN	197	139
		CONTRACT NO. 91642		
		ILLINOIS	FED. AID PROJECT	

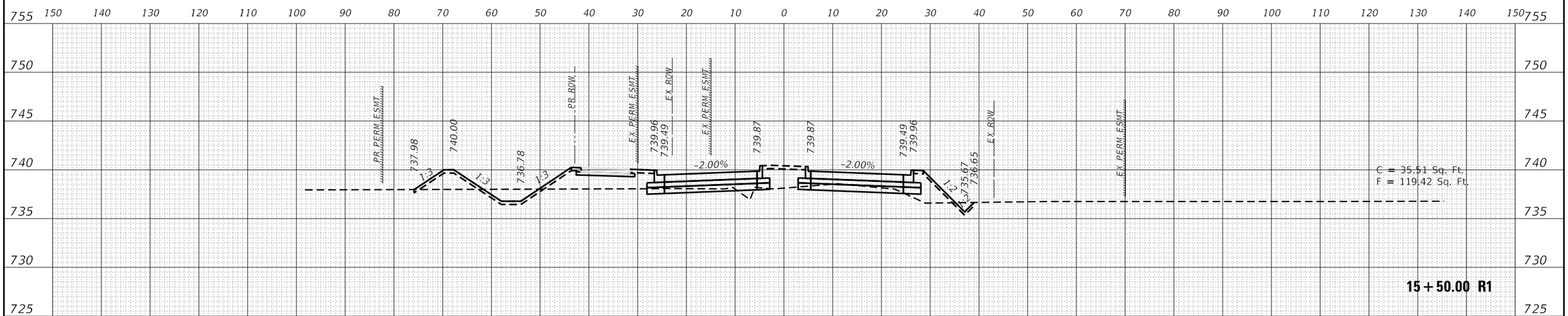

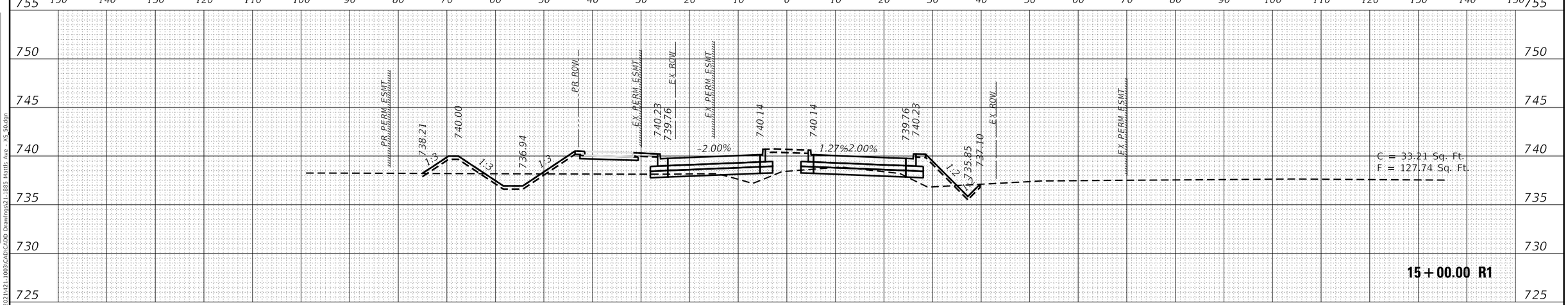

FINAL SURVEY	BY	DATE
SURVEYED		
PLOTTED		
TEMPLATE		
AREAS		
AREAS CHECKED		
NOTE BOOK NO.		

ORIGINAL SURVEY	BY	DATE
SURVEYED		
PLOTTED		
TEMPLATE		
AREAS		
AREAS CHECKED		
NOTE BOOK NO.		

MODEL: PR_MattisREV9_23_25
FILE NAME: X:\Production\Files\2021\421-1003\CADD Drawings\21-188S Mattis Ave - XS 50.dgn

USER NAME = Nick.Burrus	DESIGNED -	REVISED -
	DRAWN -	REVISED -
PLOT SCALE = 20.0000 ' / in.	CHECKED -	REVISED -
PLOT DATE = 10/1/2025	DATE -	REVISED -

STATE OF ILLINOIS
DEPARTMENT OF TRANSPORTATION

MATTIS AVE.
CROSS SECTIONS

SCALE: | SHEET OF SHEETS | STA. 15+00.00 R1 TO STA. 15+50.00 R1

F.A. RTE.	SECTION	COUNTY	TOTAL SHEETS	SHEET NO.
7159	19-000314-00-PV	CHAMPAIGN	197	140
		CONTRACT NO. 91642		
		ILLINOIS	FED. AID PROJECT	

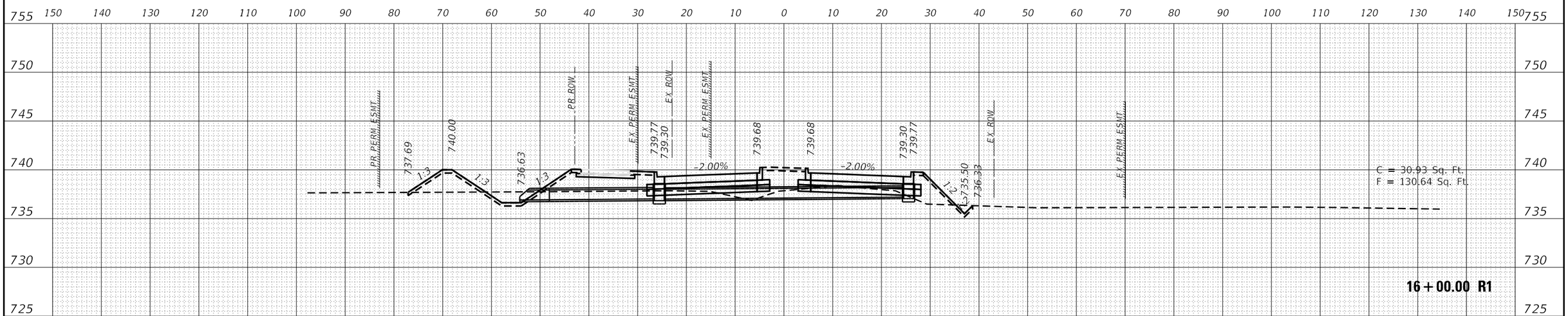

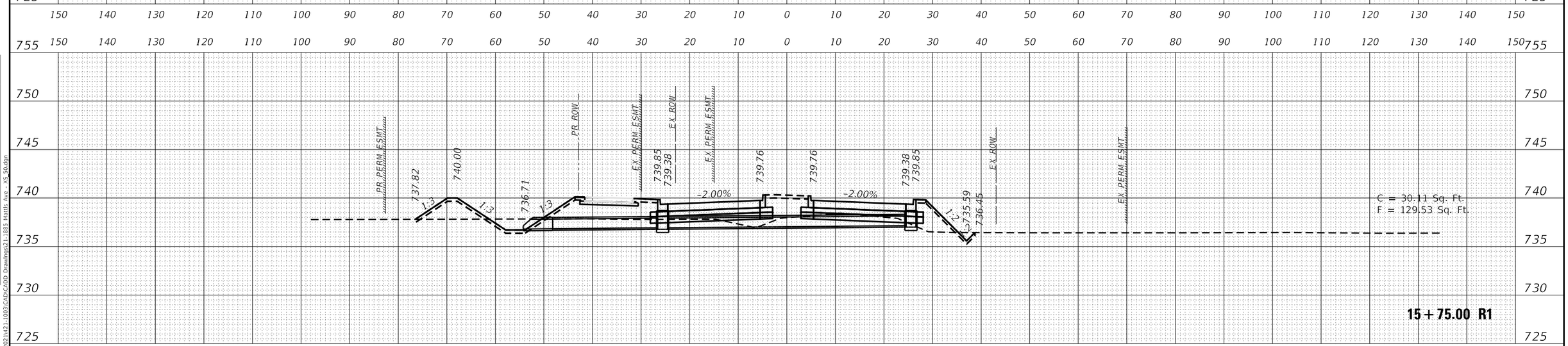

FINAL SURVEY		BY	DATE
NOTE BOOK	SURVEYED		
	PLOTTED		
	TEMPLATE		
	AREAS		
NO.	AREAS CHECKED		

ORIGINAL SURVEY		BY	DATE
NOTE BOOK	SURVEYED		
	PLOTTED		
	TEMPLATE		
	AREAS		
NO.	AREAS CHECKED		

MODEL: PR_MattisREV9_23_25
FILE NAME: X:\Production\Files\2021\421-1003\CADD Drawings\21-1885 Mattis Ave - XS 50.dgn

USER NAME = Nick.Burrus	DESIGNED -	REVISED -
	DRAWN -	REVISED -
PLOT SCALE = 20.0000 ' / in.	CHECKED -	REVISED -
PLOT DATE = 10/1/2025	DATE -	REVISED -

STATE OF ILLINOIS
DEPARTMENT OF TRANSPORTATION

MATTIS AVE.
CROSS SECTIONS

SCALE: | SHEET OF SHEETS | STA. 15+75.00 R1 TO STA. 16+00.00 R1

F.A. RTE.	SECTION	COUNTY	TOTAL SHEETS	SHEET NO.
7159	19-000314-00-PV	CHAMPAIGN	197	141
		CONTRACT NO. 91642		
		ILLINOIS	FED. AID PROJECT	

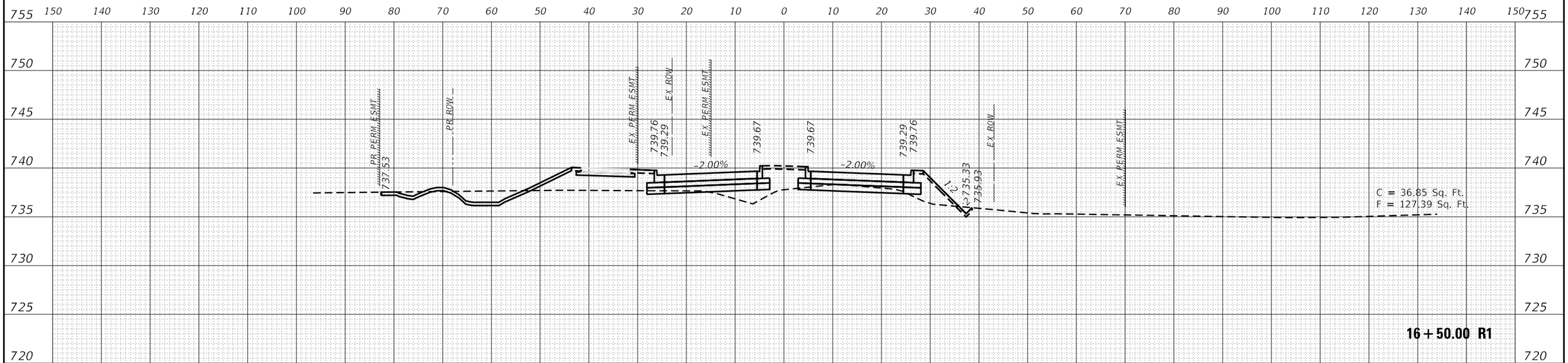

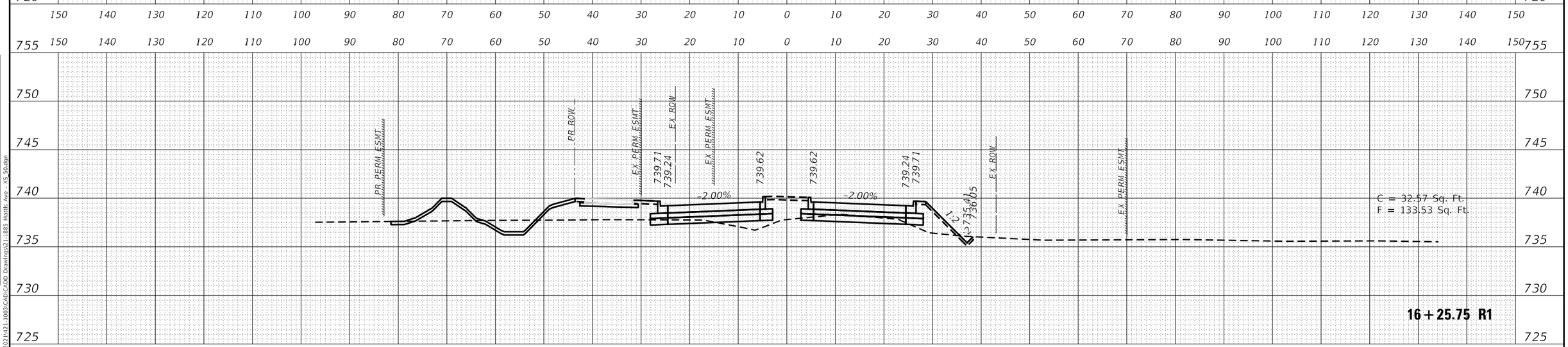

FINAL SURVEY	BY	DATE
SURVEYED		
PLOTTED		
TEMPLATE		
AREAS		
AREAS CHECKED		
NOTE BOOK NO.		

ORIGINAL SURVEY	BY	DATE
SURVEYED		
PLOTTED		
TEMPLATE		
AREAS		
AREAS CHECKED		
NOTE BOOK NO.		

MODEL: PR_MattisREV9_23_25
FILE NAME: X:\Production\Files\2021\21-1003\CADD Drawings\21-1885 Mattis Ave - XS 50.dgn

USER NAME = Nick.Burrus	DESIGNED -	REVISED -
	DRAWN -	REVISED -
PLOT SCALE = 20.0000 ' / in.	CHECKED -	REVISED -
PLOT DATE = 10/1/2025	DATE -	REVISED -

STATE OF ILLINOIS
DEPARTMENT OF TRANSPORTATION

MATTIS AVE.
CROSS SECTIONS

SCALE: | SHEET OF SHEETS | STA. 16+25.75 R1 TO STA. 16+50.00 R1

F.A. RTE.	SECTION	COUNTY	TOTAL SHEETS	SHEET NO.
7159	19-000314-00-PV	CHAMPAIGN	197	142
		CONTRACT NO. 91642		
		ILLINOIS	FED. AID PROJECT	

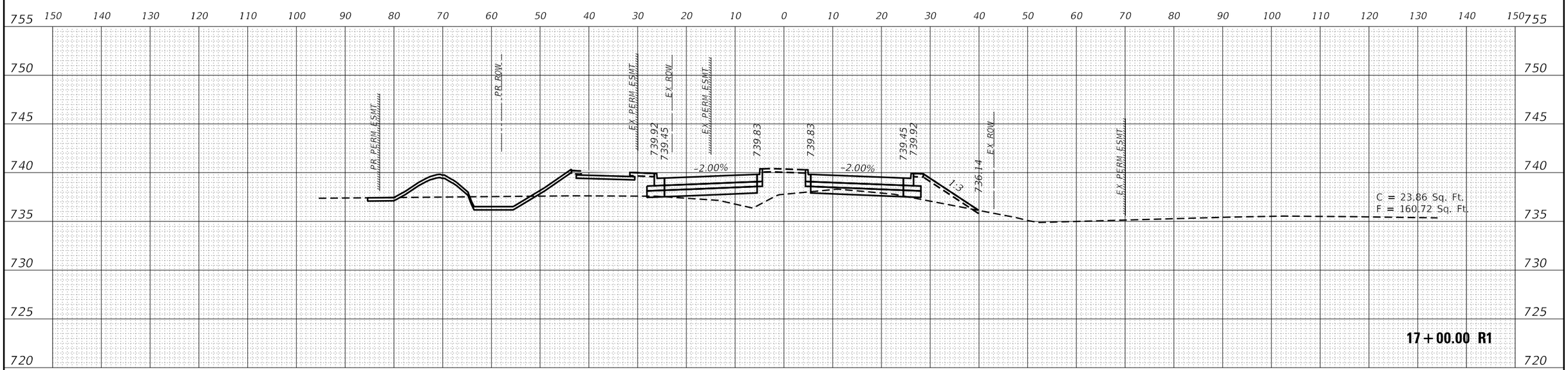

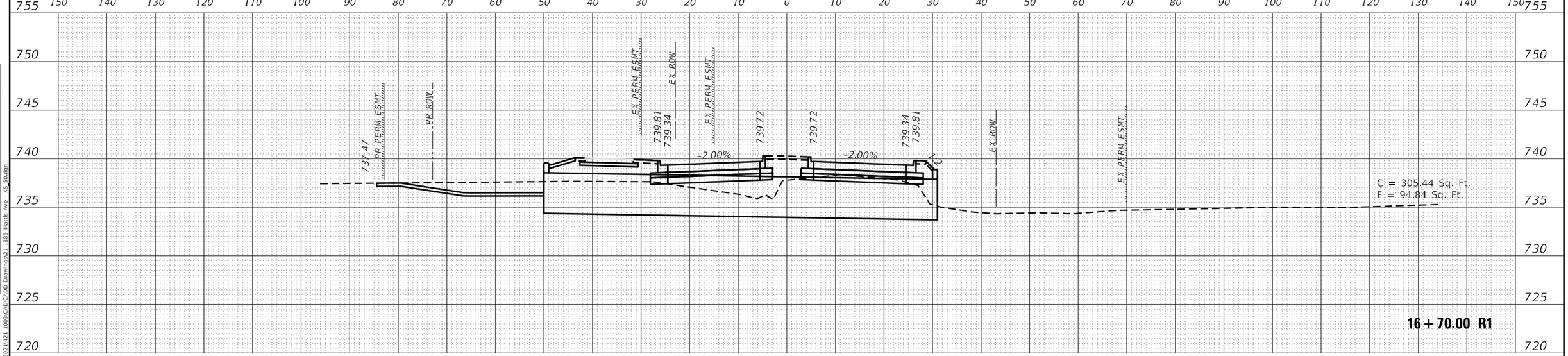

FINAL SURVEY		BY	DATE
SURVEYED			
PLOTTED			
TEMPLATE			
AREAS			
AREAS CHECKED			
NOTE BOOK			
NO.			

ORIGINAL SURVEY		BY	DATE
SURVEYED			
PLOTTED			
TEMPLATE			
AREAS			
AREAS CHECKED			
NOTE BOOK			
NO.			

MODEL: PR_MattisREV9_23_25
FILE NAME: X:\Production\Files\2021\21-1003\CADD Drawings\21-1885 Mattis Ave - XS 50.dgn

USER NAME = Nick.Burrus	DESIGNED -	REVISED -	
	DRAWN -	REVISED -	
PLOT SCALE = 20.0000 ' / in.	CHECKED -	REVISED -	
PLOT DATE = 10/1/2025	DATE -	REVISED -	

STATE OF ILLINOIS
DEPARTMENT OF TRANSPORTATION

MATTIS AVE.
CROSS SECTIONS

SCALE: | SHEET OF SHEETS | STA. 16+70.00 R1 TO STA. 17+00.00 R1

F.A. RTE.	SECTION	COUNTY	TOTAL SHEETS	SHEET NO.
7159	19-000314-00-PV	CHAMPAIGN	197	143
		CONTRACT NO. 91642		
		ILLINOIS	FED. AID PROJECT	

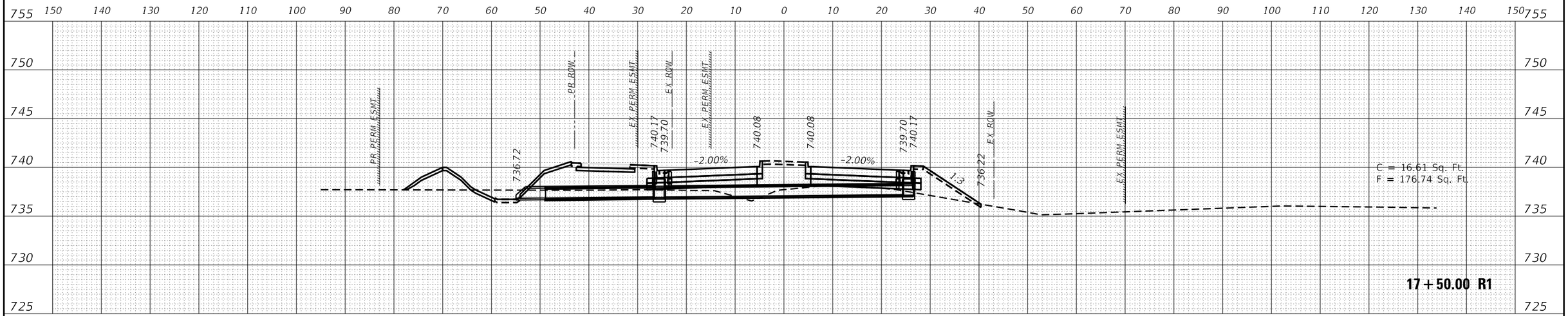

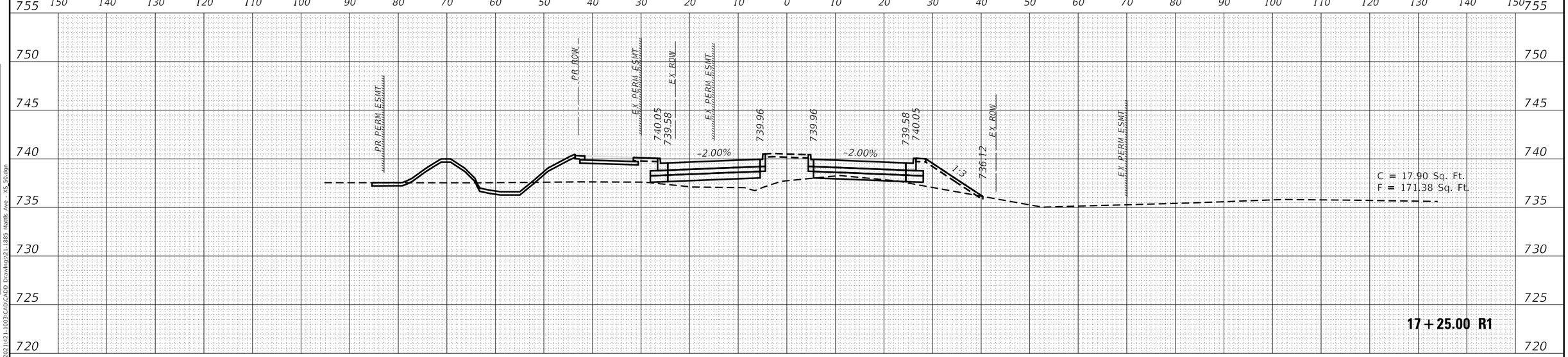

FINAL SURVEY	BY	DATE
SURVEYED		
PLOTTED		
TEMPLATE		
AREAS		
AREAS CHECKED		
NOTE BOOK		
NO.		

ORIGINAL SURVEY	BY	DATE
SURVEYED		
PLOTTED		
TEMPLATE		
AREAS		
AREAS CHECKED		
NOTE BOOK		
NO.		

MODEL: PR_MattisREV9_23_25
FILE NAME: X:\Production\Files\2021\21-1003\CADD Drawings\21-1885 Mattis Ave - XS 50.dgn

USER NAME = Nick.Burrus	DESIGNED -	REVISED -
	DRAWN -	REVISED -
PLOT SCALE = 20.0000 ' / in.	CHECKED -	REVISED -
PLOT DATE = 10/1/2025	DATE -	REVISED -

STATE OF ILLINOIS
DEPARTMENT OF TRANSPORTATION

MATTIS AVE.
CROSS SECTIONS

SCALE: | SHEET OF SHEETS | STA. 17+25.00 R1 TO STA. 17+50.00 R1

F.A. RTE.	SECTION	COUNTY	TOTAL SHEETS	SHEET NO.
7159	19-000314-00-PV	CHAMPAIGN	197	144
		CONTRACT NO. 91642		
		ILLINOIS	FED. AID PROJECT	

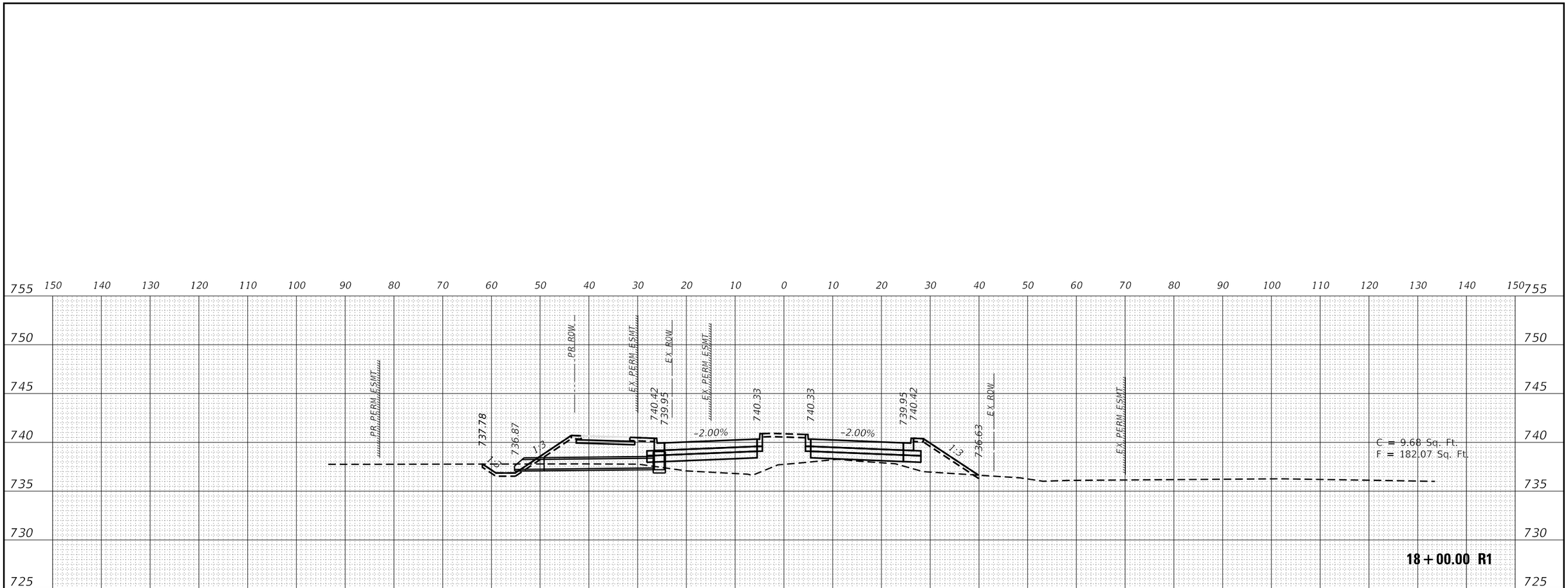

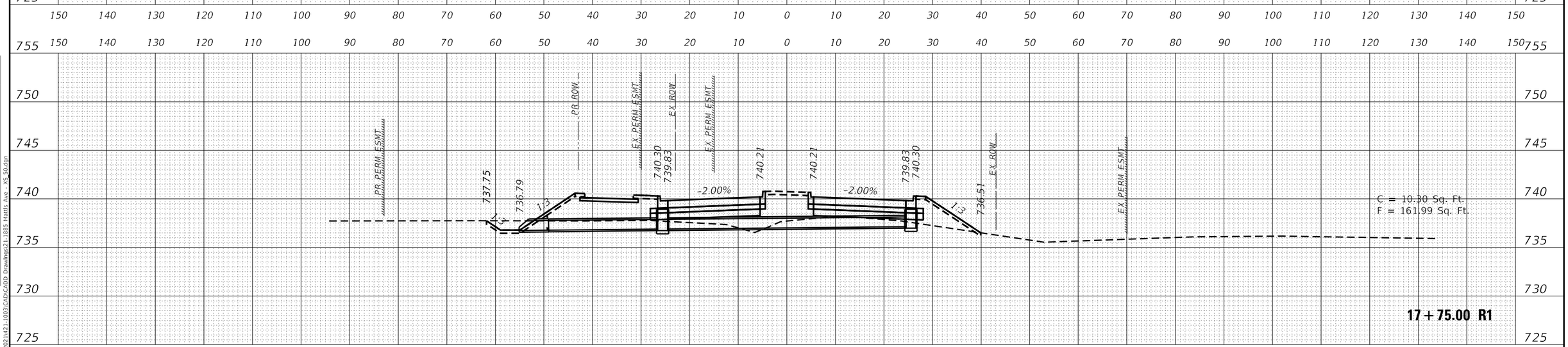

FINAL SURVEY	BY	DATE
SURVEYED		
PLOTTED		
TEMPLATE		
AREAS		
AREAS CHECKED		
NOTE BOOK		
NO.		

ORIGINAL SURVEY	BY	DATE
SURVEYED		
PLOTTED		
TEMPLATE		
AREAS		
AREAS CHECKED		
NOTE BOOK		
NO.		

MODEL: PR_MattisREV9_23_25
FILE NAME: X:\Production\Files\2021\421-1003\CADD Drawings\21-1885 Mattis Ave - XS 50.dgn

USER NAME = Nick.Burrus	DESIGNED -	REVISED -
	DRAWN -	REVISED -
PLOT SCALE = 20.0000 ' / in.	CHECKED -	REVISED -
PLOT DATE = 10/1/2025	DATE -	REVISED -

STATE OF ILLINOIS
DEPARTMENT OF TRANSPORTATION

MATTIS AVE.
CROSS SECTIONS

SCALE: | SHEET OF SHEETS | STA. 17+75.00 R1 TO STA. 18+00.00 R1

F.A. RTE.	SECTION	COUNTY	TOTAL SHEETS	SHEET NO.
7159	19-000314-00-PV	CHAMPAIGN	197	145
		CONTRACT NO. 91642		
		ILLINOIS	FED. AID PROJECT	

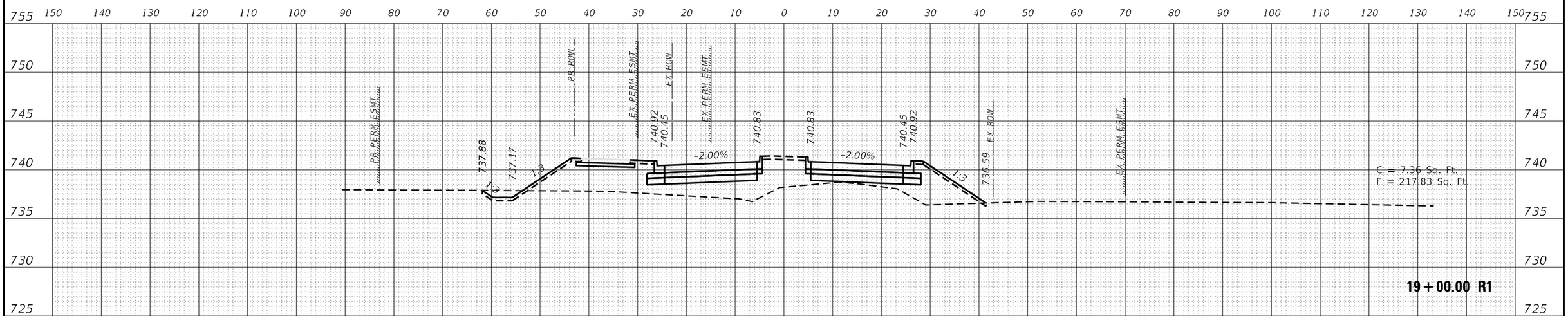

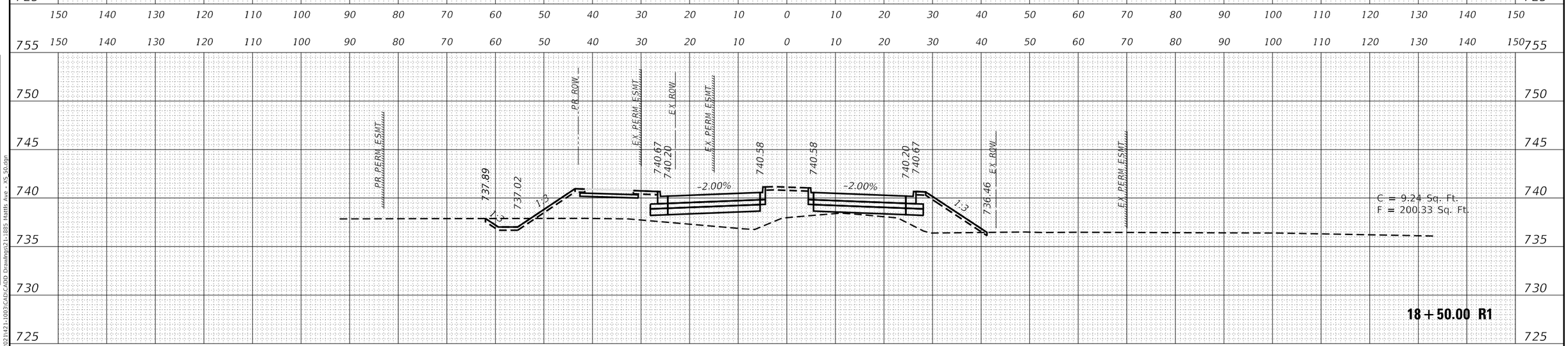

USER NAME = Nick.Burrus	DESIGNED -	REVISED -	
	DRAWN -	REVISED -	
PLOT SCALE = 20.0000 ' / in.	CHECKED -	REVISED -	
PLOT DATE = 10/1/2025	DATE -	REVISED -	

STATE OF ILLINOIS
DEPARTMENT OF TRANSPORTATION

MATTIS AVE.
CROSS SECTIONS

SCALE: | SHEET OF SHEETS | STA. 18+50.00 R1 TO STA. 19+00.00 R1

F.A. RTE.	SECTION	COUNTY	TOTAL SHEETS	SHEET NO.
7159	19-000314-00-PV	CHAMPAIGN	197	146
		CONTRACT NO. 91642		
		ILLINOIS	FED. AID PROJECT	

FINAL SURVEY — NOTE BOOK NO. — SURVEYED — PLOTTED — TEMPLATE — AREAS — AREAS CHECKED — BY — DATE

ORIGINAL SURVEY — NOTE BOOK NO. — SURVEYED — PLOTTED — TEMPLATE — AREAS — AREAS CHECKED — BY — DATE

MODEL: PR_MattisREV9_23_25
FILE NAME: X:\Production\Files\2021\21-1093\CADD Drawings\21-1885 Mattis Ave - XS 50.dgn

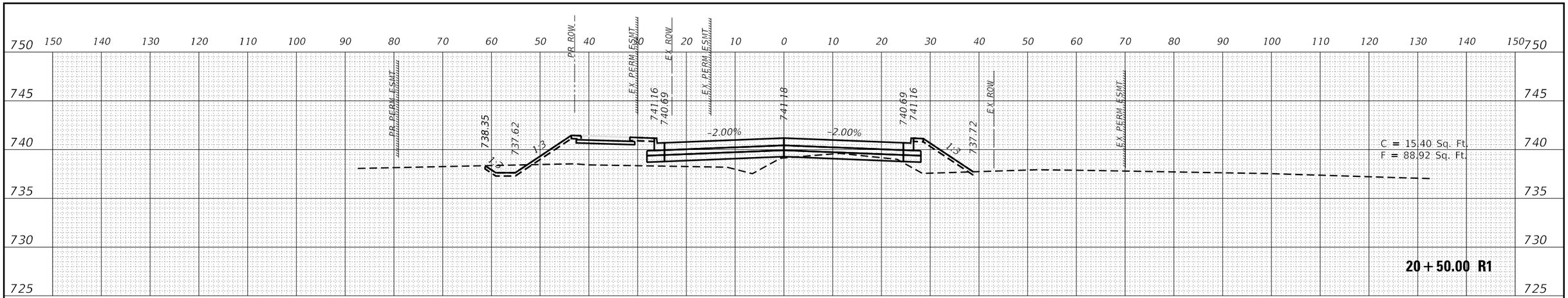

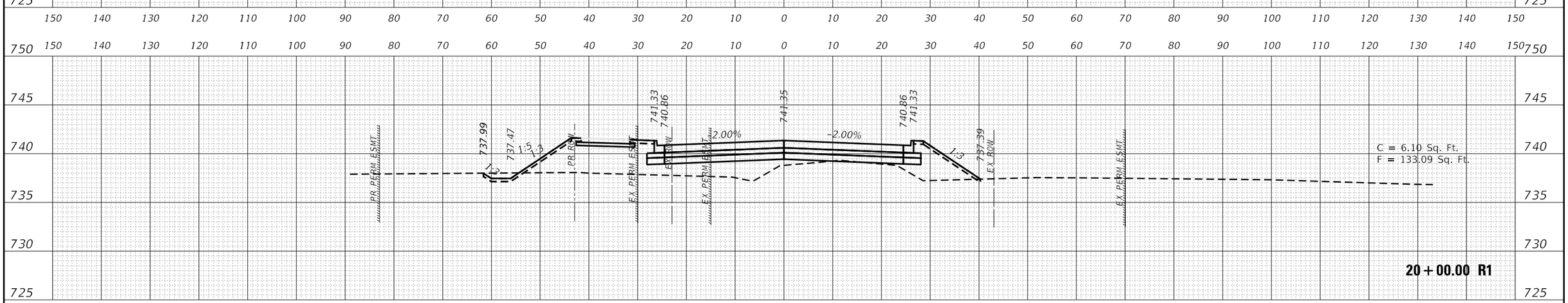

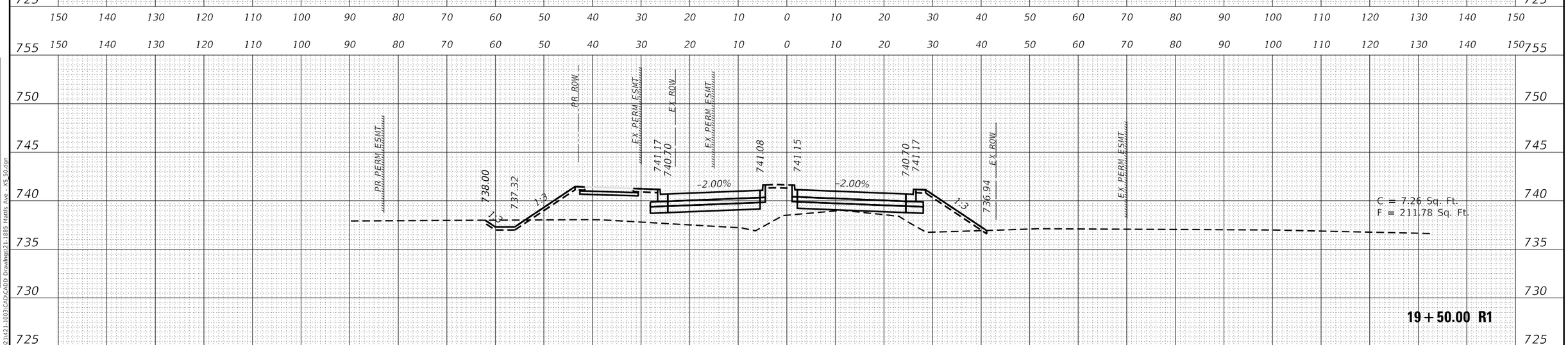

FINAL SURVEY	BY	DATE
SURVEYED		
PLOTTED		
TEMPLATE		
AREAS		
AREAS CHECKED		
NOTE BOOK NO.		

ORIGINAL SURVEY	BY	DATE
SURVEYED		
PLOTTED		
TEMPLATE		
AREAS		
AREAS CHECKED		
NOTE BOOK NO.		

MODEL: PR_MattisREV9_23_25
FILE NAME: X:\Production\Files\2021\421-1003\CADD Drawings\21-1885 Mattis Ave - XS 50.dgn

USER NAME = Nick.Burrus	DESIGNED -	REVISED -
	DRAWN -	REVISED -
PLOT SCALE = 20.0000 ' / in.	CHECKED -	REVISED -
PLOT DATE = 10/1/2025	DATE -	REVISED -

STATE OF ILLINOIS
DEPARTMENT OF TRANSPORTATION

MATTIS AVE.
CROSS SECTIONS

SCALE: | SHEET OF SHEETS | STA. 19+50.00 R1 TO STA. 20+50.00 R1

F.A. RTE.	SECTION	COUNTY	TOTAL SHEETS	SHEET NO.
7159	19-000314-00-PV	CHAMPAIGN	197	147
		CONTRACT NO. 91642		
		ILLINOIS	FED. AID PROJECT	

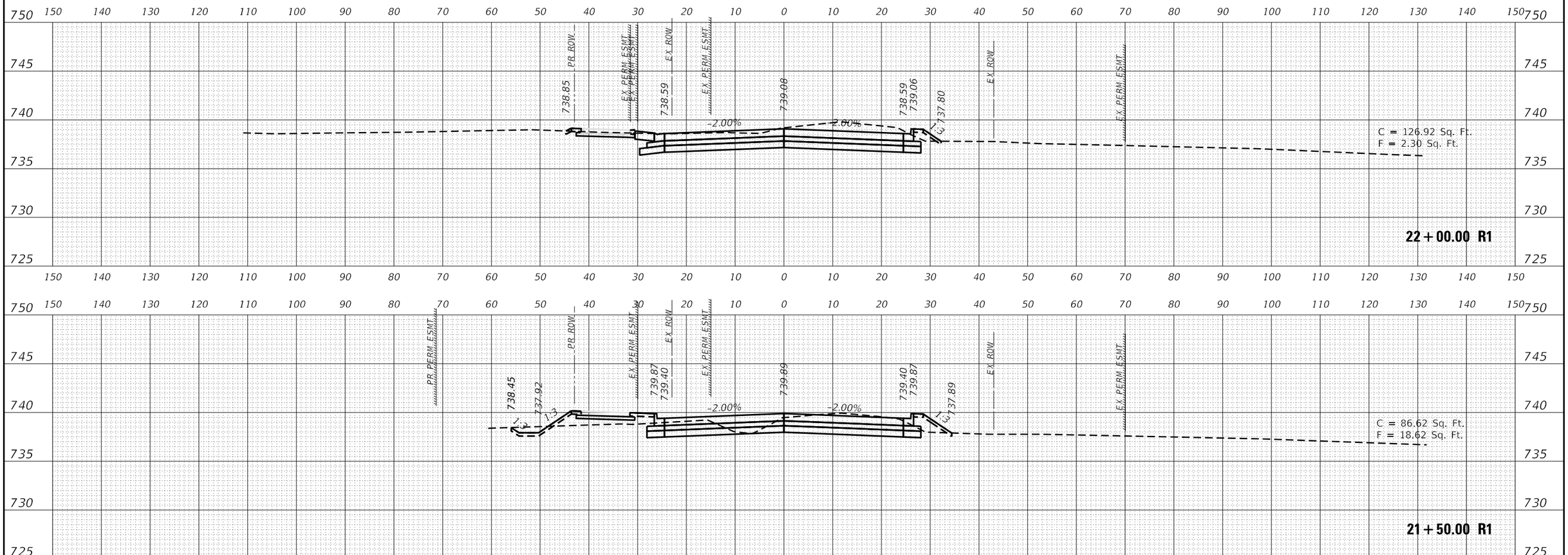

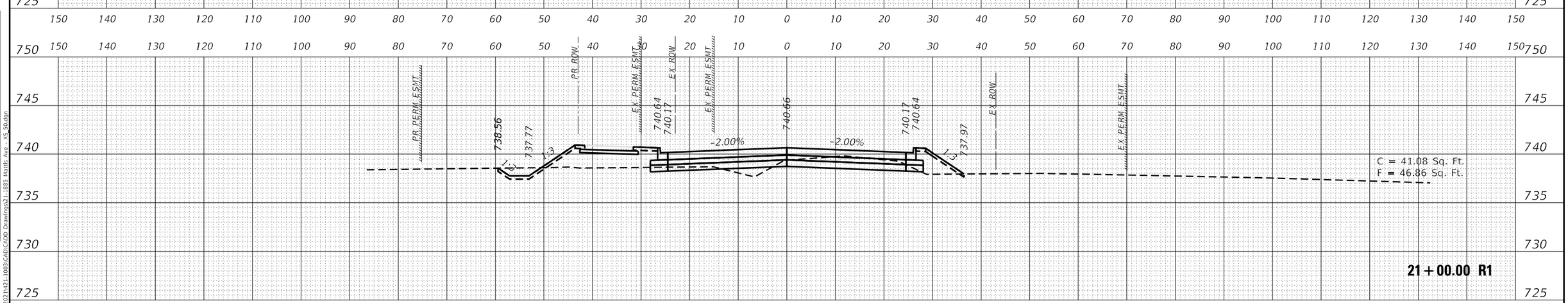

FINAL SURVEY		BY	DATE
NOTE BOOK	SURVEYED		
	PLOTTED		
	TEMPLATE		
	AREAS		
NO.	AREAS CHECKED		

ORIGINAL SURVEY		BY	DATE
NOTE BOOK	SURVEYED		
	PLOTTED		
	TEMPLATE		
	AREAS		
NO.	AREAS CHECKED		

MODEL: PR_MattisREV9_23_25
FILE NAME: X:\Production\Files\2021\421-1003\CADD Drawings\21-188S Mattis Ave - XS 30.dgn

USER NAME = Nick.Burrus	DESIGNED -	REVISED -	
	DRAWN -	REVISED -	
PLOT SCALE = 20.0000 ' / in.	CHECKED -	REVISED -	
PLOT DATE = 10/1/2025	DATE -	REVISED -	

STATE OF ILLINOIS
DEPARTMENT OF TRANSPORTATION

MATTIS AVE.
CROSS SECTIONS

SCALE: | SHEET OF SHEETS | STA. 21+00.00 R1 TO STA. 22+00.00 R1

F.A. RTE.	SECTION	COUNTY	TOTAL SHEETS	SHEET NO.
7159	19-000314-00-PV	CHAMPAIGN	197	148
		CONTRACT NO. 91642		
		ILLINOIS	FED. AID PROJECT	

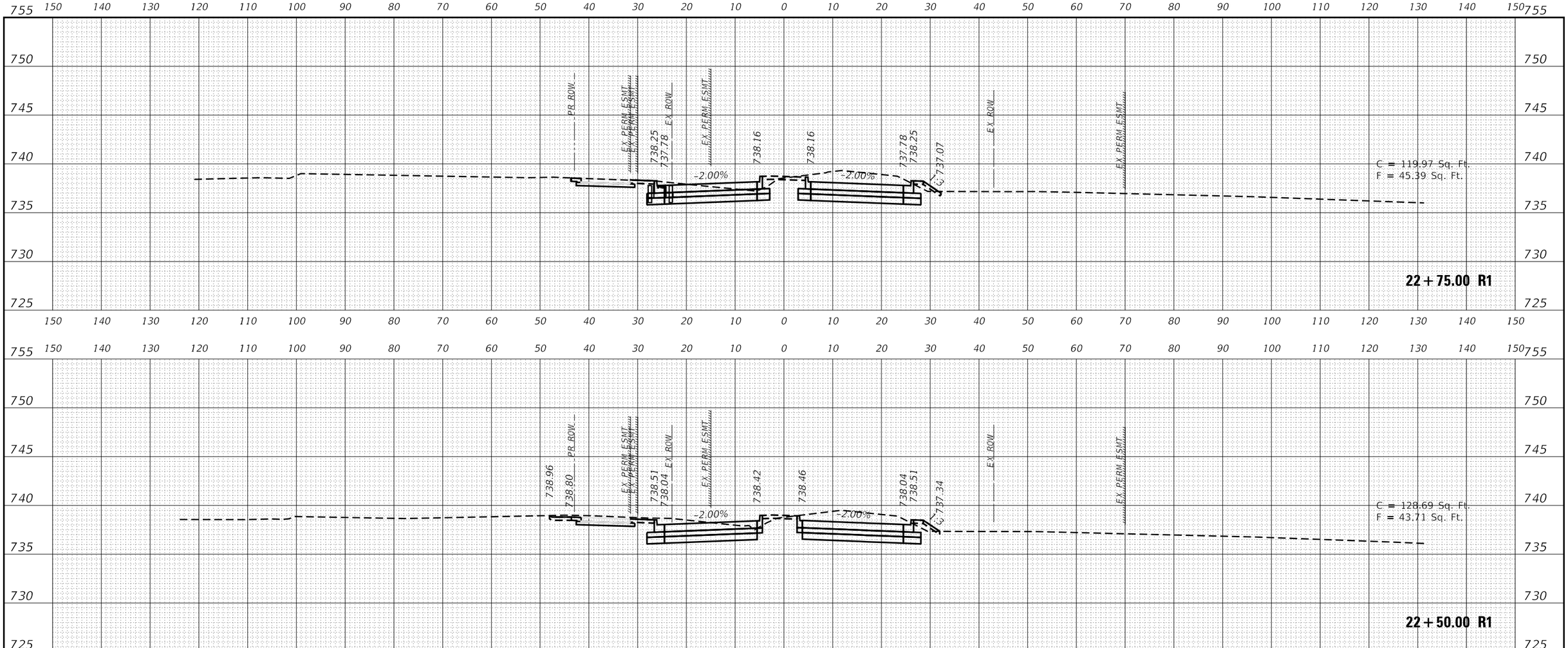

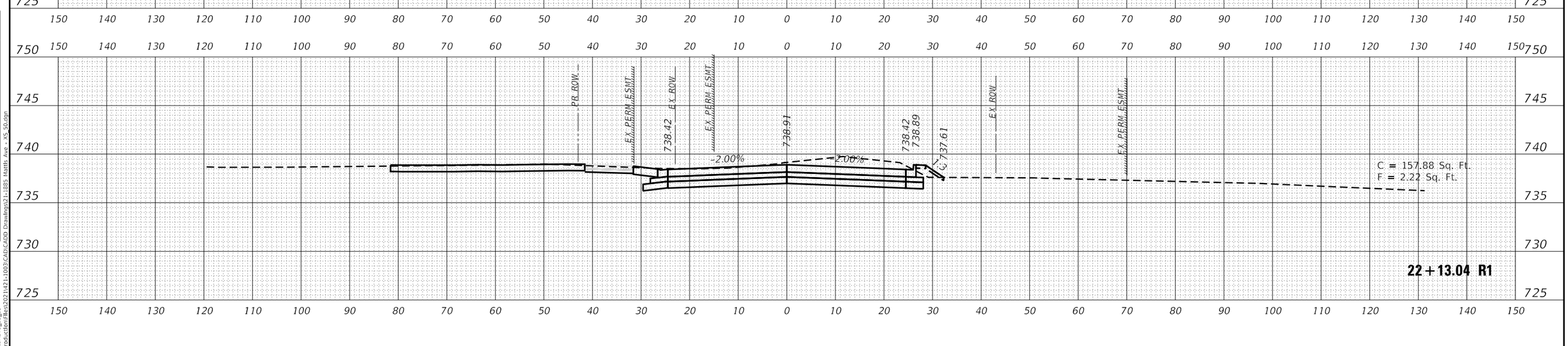

FINAL SURVEY	BY	DATE
SURVEYED		
PLOTTED		
TEMPLATE		
AREAS		
AREAS CHECKED		
NOTE BOOK NO.		

ORIGINAL SURVEY	BY	DATE
SURVEYED		
PLOTTED		
TEMPLATE		
AREAS		
AREAS CHECKED		
NOTE BOOK NO.		

MODEL: PR_MattisREV9_23_25
FILE NAME: X:\Production\Files\2021\421-1003\CAD\CADD Drawings\21-188S Mattis Ave - XS 30.dgn

USER NAME = Nick.Burrus	DESIGNED -	REVISED -	
	DRAWN -	REVISED -	
PLOT SCALE = 20.0000 ' / in.	CHECKED -	REVISED -	
PLOT DATE = 10/1/2025	DATE -	REVISED -	

STATE OF ILLINOIS
DEPARTMENT OF TRANSPORTATION

MATTIS AVE.
CROSS SECTIONS

SCALE: | SHEET OF SHEETS | STA. 22+13.04 R1 TO STA. 22+75.00 R1

F.A. RTE.	SECTION	COUNTY	TOTAL SHEETS	SHEET NO.
7159	19-000314-00-PV	CHAMPAIGN	197	149
		CONTRACT NO. 91642		
		ILLINOIS	FED. AID PROJECT	

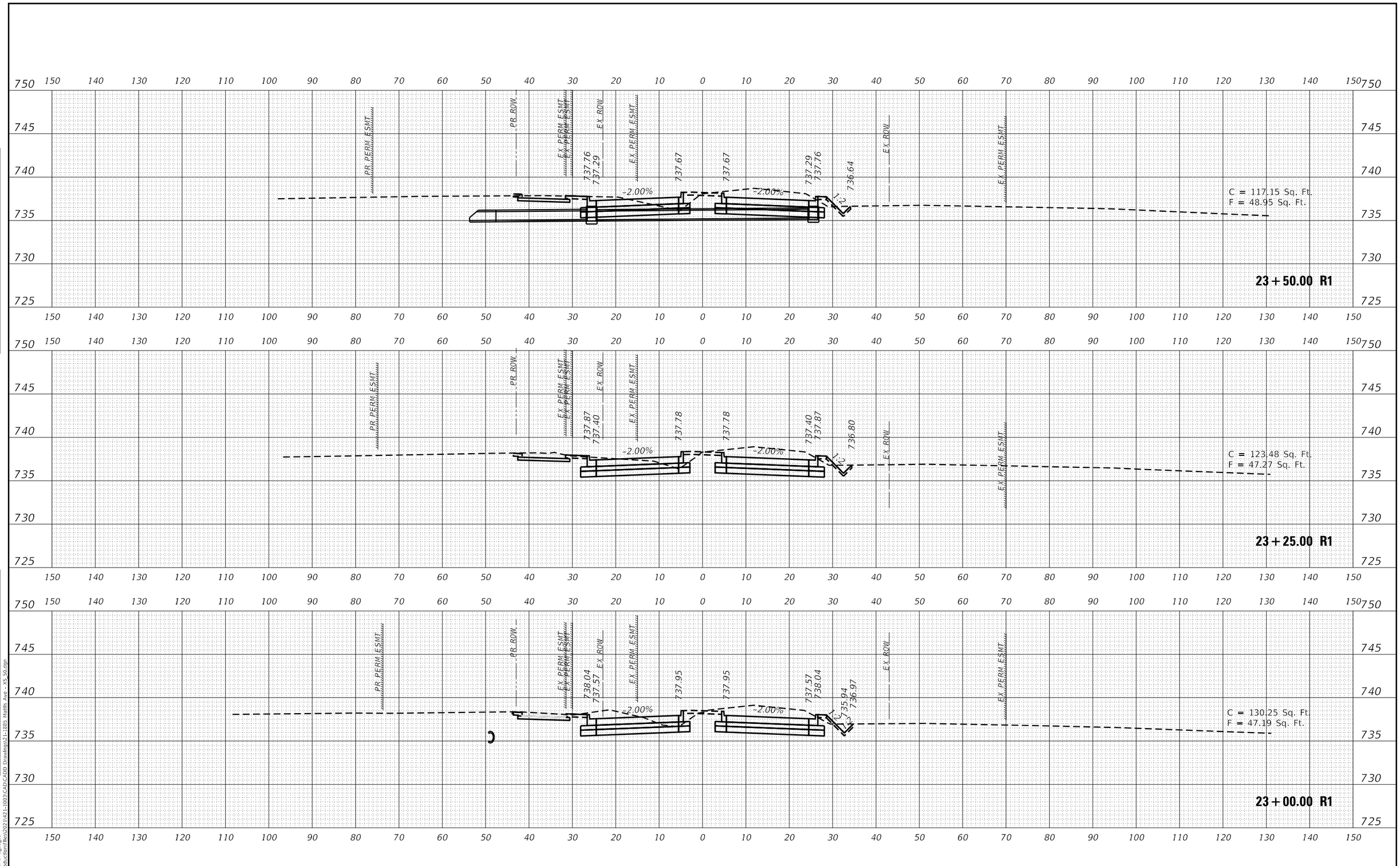

FINAL SURVEY		BY	DATE
NOTE BOOK	SURVEYED		
	PLOTTED		
	TEMPLATE		
	AREAS		
NO.	AREAS CHECKED		

ORIGINAL SURVEY		BY	DATE
NOTE BOOK	SURVEYED		
	PLOTTED		
	TEMPLATE		
	AREAS		
NO.	AREAS CHECKED		

MODEL: PR_MattisREV9_23_25
FILE NAME: X:\Production\Files\2021\421-1003\CADD Drawings\21-188S Mattis Ave - XS 30.dgn

USER NAME = Nick.Burrus	DESIGNED -	REVISED -
	DRAWN -	REVISED -
PLOT SCALE = 20.0000 ' / in.	CHECKED -	REVISED -
PLOT DATE = 10/1/2025	DATE -	REVISED -

STATE OF ILLINOIS
DEPARTMENT OF TRANSPORTATION

MATTIS AVE.
CROSS SECTIONS

SCALE: | SHEET OF SHEETS | STA. 23+00.00 R1 TO STA. 23+50.00 R1

F.A. RTE.	SECTION	COUNTY	TOTAL SHEETS	SHEET NO.
7159	19-000314-00-PV	CHAMPAIGN	197	150
		CONTRACT NO. 91642		
		ILLINOIS	FED. AID PROJECT	

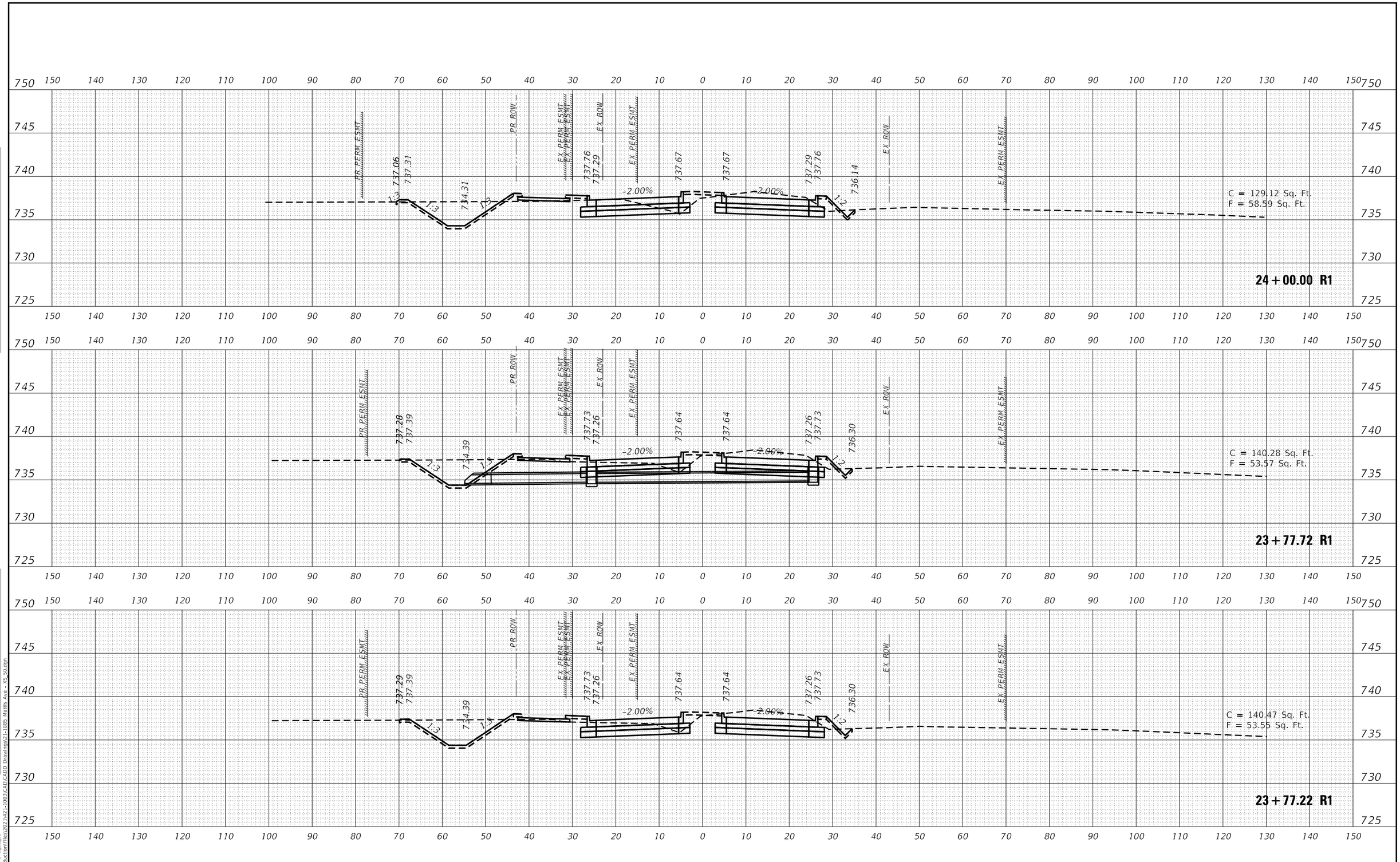

FINAL SURVEY	BY	DATE
SURVEYED		
PLOTTED		
TEMPLATE		
AREAS		
AREAS CHECKED		
NOTE BOOK NO.		

ORIGINAL SURVEY	BY	DATE
SURVEYED		
PLOTTED		
TEMPLATE		
AREAS		
AREAS CHECKED		
NOTE BOOK NO.		

MODEL: PR_MattisREV9_23_25
FILE NAME: X:\Production\files\2021\21-1003\CADD Drawings\21-1085 Mattis Ave - XS 50.dgn

USER NAME = Nick.Burrus	DESIGNED -	REVISED -
	DRAWN -	REVISED -
PLOT SCALE = 20.0000 ' / in.	CHECKED -	REVISED -
PLOT DATE = 10/1/2025	DATE -	REVISED -

STATE OF ILLINOIS
DEPARTMENT OF TRANSPORTATION

MATTIS AVE.
CROSS SECTIONS

SCALE: | SHEET OF SHEETS | STA. 23+77.22 R1 TO STA. 24+00.00 R1

F.A. RTE.	SECTION	COUNTY	TOTAL SHEETS	SHEET NO.
7159	19-000314-00-PV	CHAMPAIGN	197	151
		CONTRACT NO. 91642		
		ILLINOIS	FED. AID PROJECT	

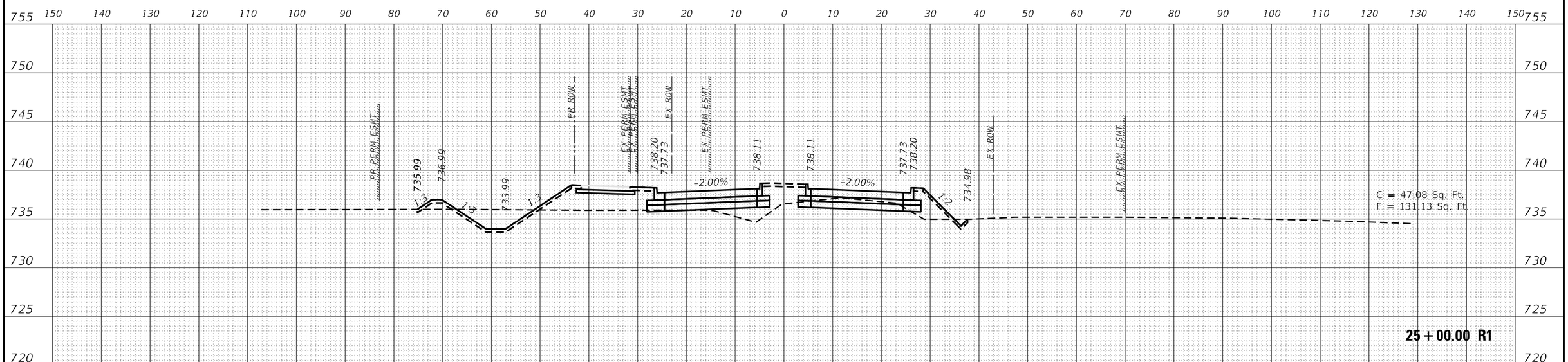

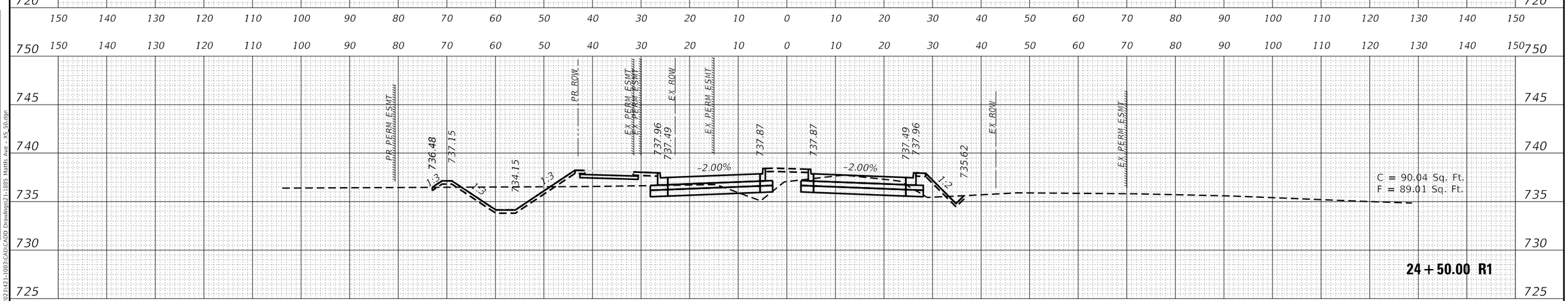

FINAL SURVEY		BY	DATE
NOTE BOOK	SURVEYED		
	PLOTTED		
	TEMPLATE		
	AREAS		
NO.	AREAS CHECKED		

ORIGINAL SURVEY		BY	DATE
NOTE BOOK	SURVEYED		
	PLOTTED		
	TEMPLATE		
	AREAS		
NO.	AREAS CHECKED		

MODEL: PR_MattisREV9_23_25
FILE NAME: X:\Production\Files\2021\421-1003\CADD Drawings\21-188S Mattis Ave - XS 30.dgn

USER NAME = Nick.Burrus	DESIGNED -	REVISED -
	DRAWN -	REVISED -
PLOT SCALE = 20.0000 ' / in.	CHECKED -	REVISED -
PLOT DATE = 10/1/2025	DATE -	REVISED -

STATE OF ILLINOIS
DEPARTMENT OF TRANSPORTATION

MATTIS AVE.
CROSS SECTIONS

SCALE: | SHEET OF SHEETS | STA. 24+50.00 R1 TO STA. 25+00.00 R1

F.A. RTE.	SECTION	COUNTY	TOTAL SHEETS	SHEET NO.
7159	19-000314-00-PV	CHAMPAIGN	197	152
		CONTRACT NO. 91642		
		ILLINOIS	FED. AID PROJECT	

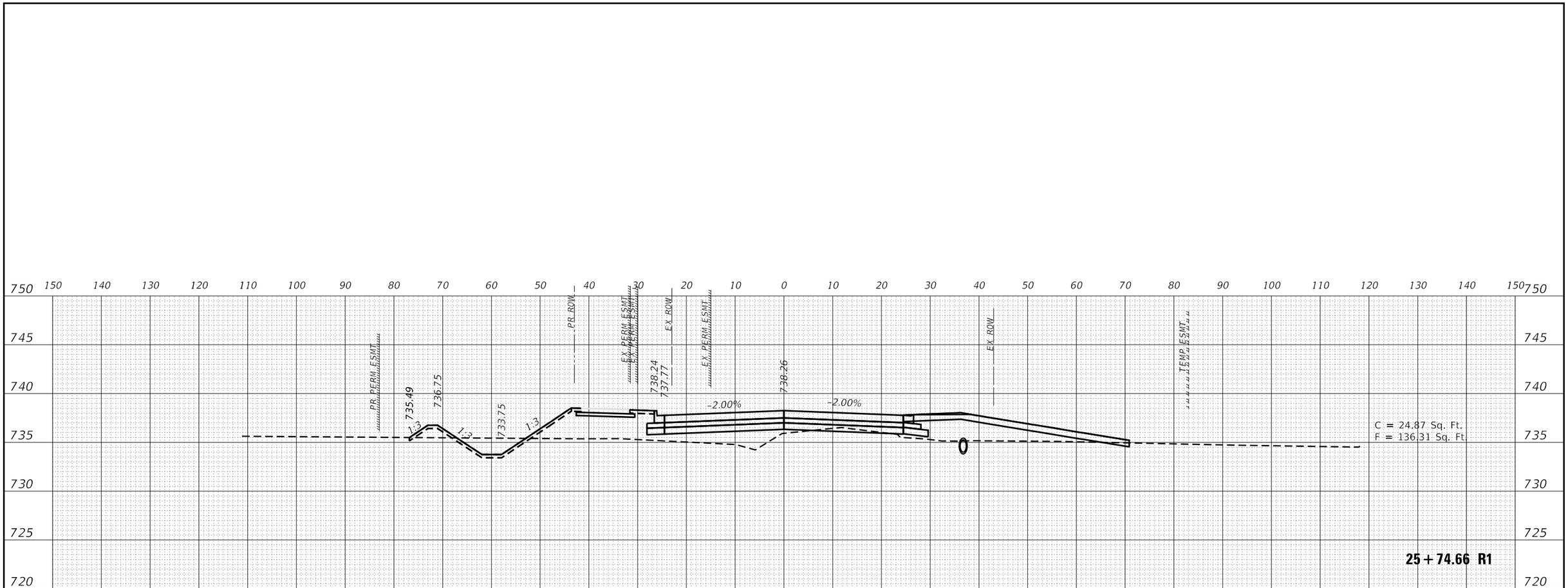

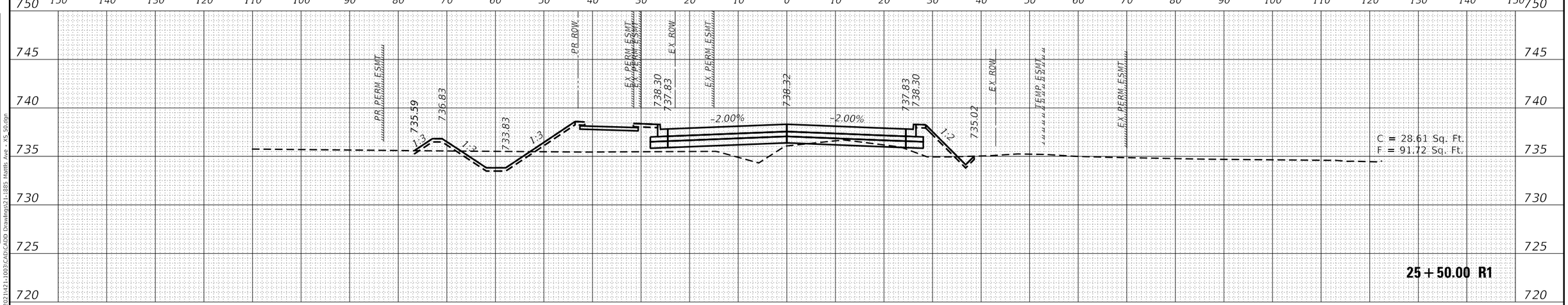

USER NAME = Nick.Burrus	DESIGNED -	REVISED -	
	DRAWN -	REVISED -	
PLOT SCALE = 20.0000 ' / in.	CHECKED -	REVISED -	
PLOT DATE = 10/1/2025	DATE -	REVISED -	

STATE OF ILLINOIS
DEPARTMENT OF TRANSPORTATION

MATTIS AVE.
CROSS SECTIONS

SCALE: | SHEET OF SHEETS | STA. 25+50.00 R1 TO STA. 25+74.66 R1

F.A. RTE.	SECTION	COUNTY	TOTAL SHEETS	SHEET NO.
7159	19-000314-00-PV	CHAMPAIGN	197	153
		CONTRACT NO. 91642		
		ILLINOIS	FED. AID PROJECT	

FINAL SURVEY — NOTE BOOK NO. — SURVEYED — PLOTTED — TEMPLATE — AREAS — AREAS CHECKED — BY — DATE

ORIGINAL SURVEY — NOTE BOOK NO. — SURVEYED — PLOTTED — TEMPLATE — AREAS — AREAS CHECKED — BY — DATE

MODEL: PR_MattisREV9_23_25
FILE NAME: X:\Production\Files\2021\21-1003\CAD\CADD Drawings\21-1885 Mattis Ave - XS 50.dgn

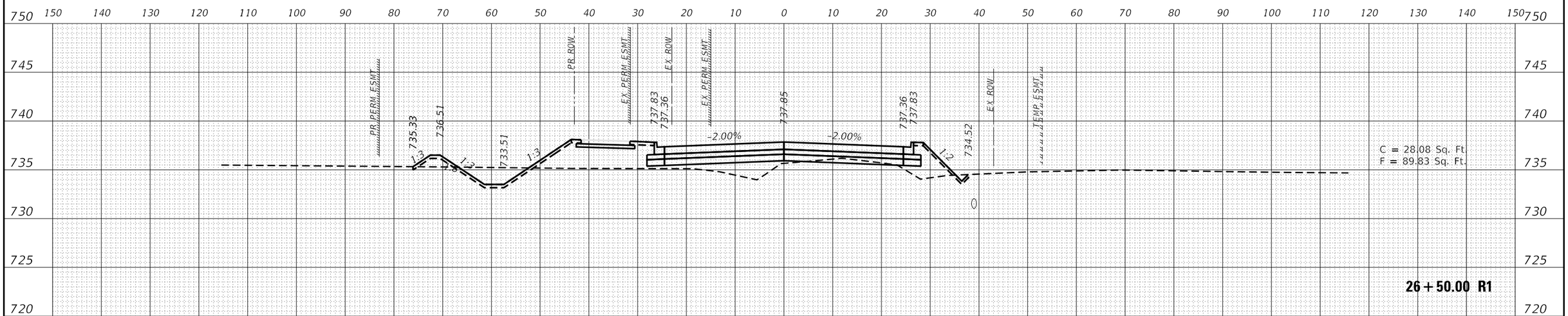

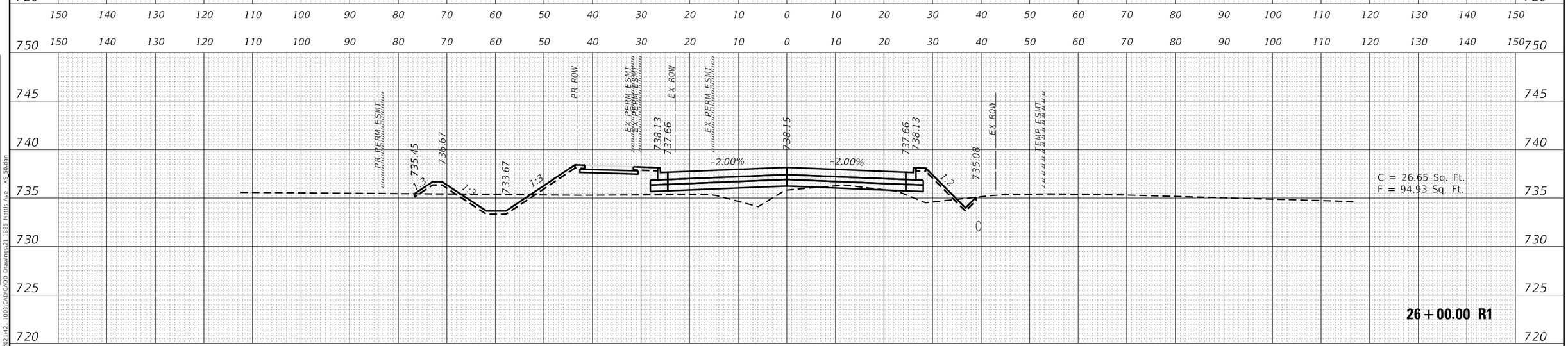

FINAL SURVEY	BY	DATE
SURVEYED		
PLOTTED		
TEMPLATE		
AREAS		
AREAS CHECKED		
NOTE BOOK NO.		

ORIGINAL SURVEY	BY	DATE
SURVEYED		
PLOTTED		
TEMPLATE		
AREAS		
AREAS CHECKED		
NOTE BOOK NO.		

MODEL: PR_MattisREV9_23_25
FILE NAME: X:\Production\Files\2021\421-1003\CADD Drawings\21-1885 Mattis Ave - XS 50.dgn

USER NAME = Nick.Burrus	DESIGNED -	REVISED -
	DRAWN -	REVISED -
PLOT SCALE = 20.0000 ' / in.	CHECKED -	REVISED -
PLOT DATE = 10/1/2025	DATE -	REVISED -

STATE OF ILLINOIS
DEPARTMENT OF TRANSPORTATION

MATTIS AVE.
CROSS SECTIONS

SCALE: | SHEET OF SHEETS | STA. 26+00.00 R1 TO STA. 26+50.00 R1

F.A. RTE.	SECTION	COUNTY	TOTAL SHEETS	SHEET NO.
7159	19-000314-00-PV	CHAMPAIGN	197	154
		CONTRACT NO. 91642		
		ILLINOIS	FED. AID PROJECT	

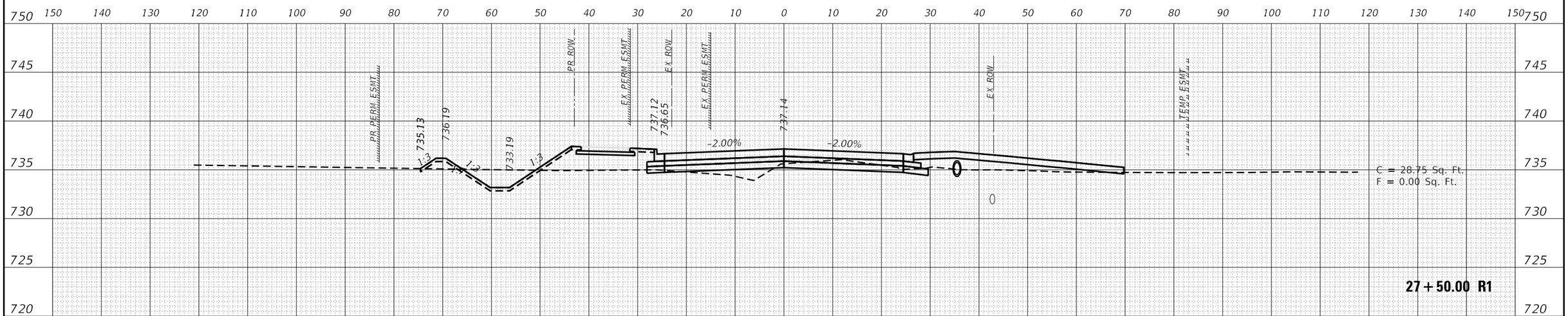

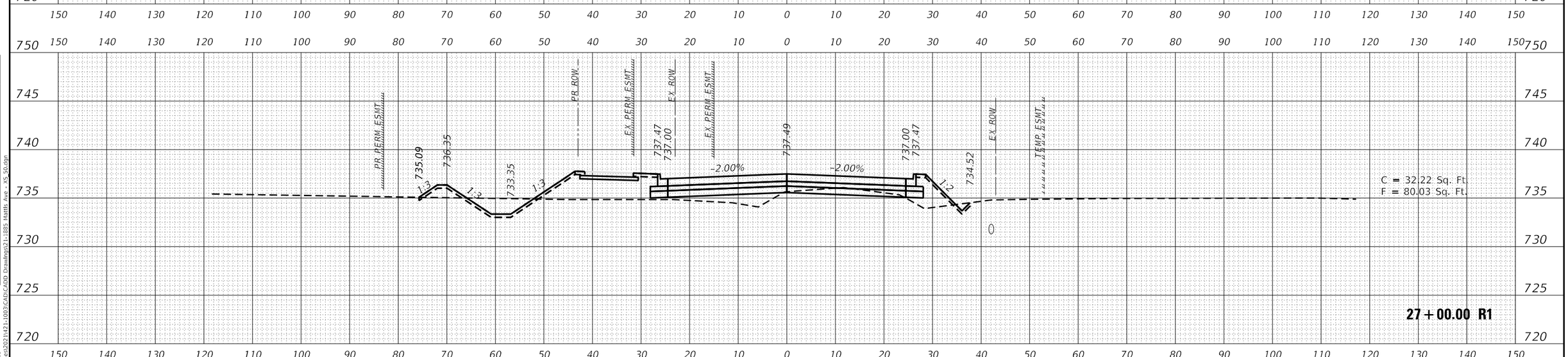

FINAL SURVEY	BY	DATE
SURVEYED		
PLOTTED		
TEMPLATE		
AREAS		
AREAS CHECKED		
NOTE BOOK NO.		

ORIGINAL SURVEY	BY	DATE
SURVEYED		
PLOTTED		
TEMPLATE		
AREAS		
AREAS CHECKED		
NOTE BOOK NO.		

MODEL: PR_MattisREV9_23_25
FILE NAME: X:\Production\Files\2021\421-1003\CADD Drawings\21-188S Mattis Ave - XS 50.dgn

USER NAME = Nick.Burrus	DESIGNED -	REVISED -
	DRAWN -	REVISED -
PLOT SCALE = 20.0000 ' / in.	CHECKED -	REVISED -
PLOT DATE = 10/1/2025	DATE -	REVISED -

STATE OF ILLINOIS
DEPARTMENT OF TRANSPORTATION

MATTIS AVE.
CROSS SECTIONS

SCALE: | SHEET OF SHEETS | STA. 27+00.00 R1 TO STA. 27+50.00 R1

F.A. RTE.	SECTION	COUNTY	TOTAL SHEETS	SHEET NO.
7159	19-000314-00-PV	CHAMPAIGN	197	155
		CONTRACT NO. 91642		
		ILLINOIS	FED. AID PROJECT	

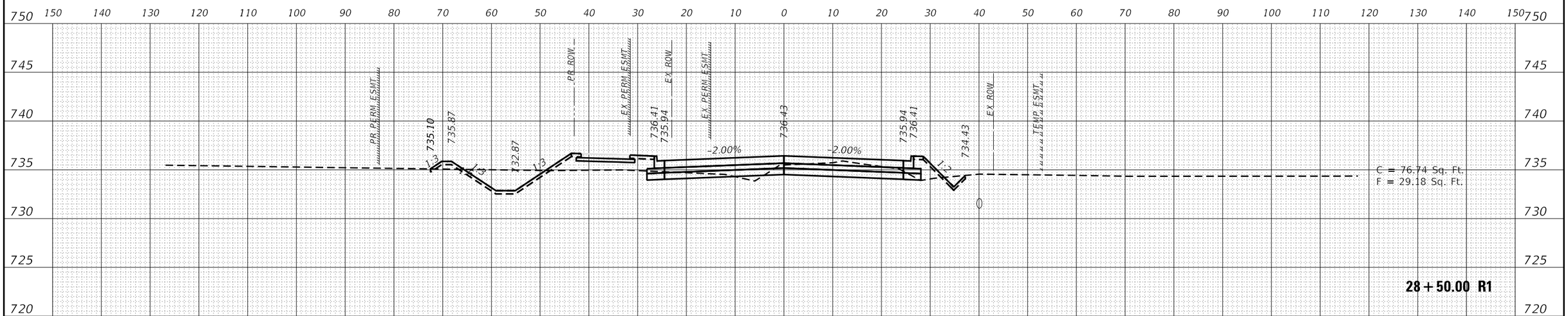

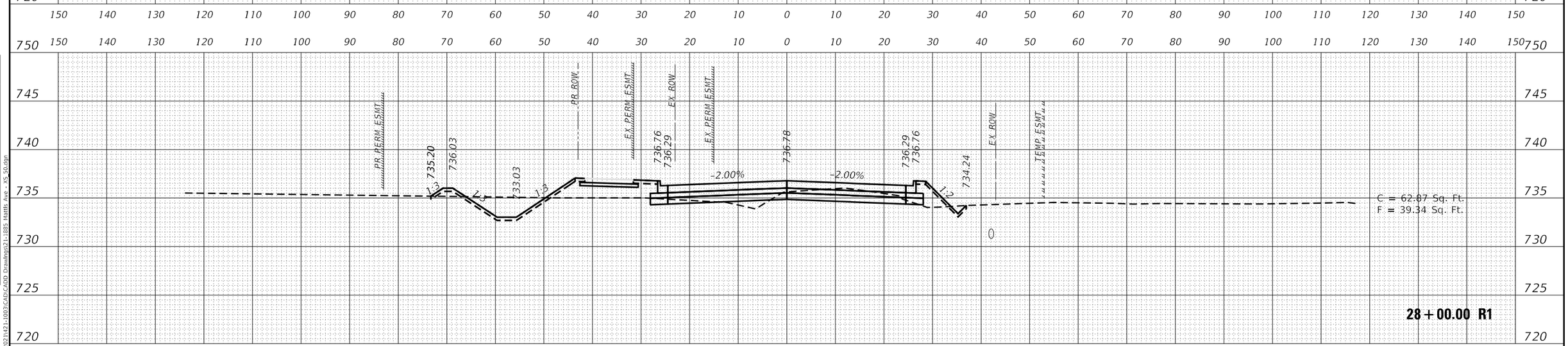

FINAL SURVEY		BY	DATE
NOTE BOOK	SURVEYED		
	PLOTTED		
	TEMPLATE		
	AREAS		
	AREAS CHECKED		
NO.			

ORIGINAL SURVEY		BY	DATE
NOTE BOOK	SURVEYED		
	PLOTTED		
	TEMPLATE		
	AREAS		
	AREAS CHECKED		
NO.			

MODEL: PR_MattisREV9_23_25
FILE NAME: X:\Production\Files\2021\21-1003\CADD Drawings\21-1885 Mattis Ave - XS 50.dgn

USER NAME = Nick.Burrus	DESIGNED -	REVISED -
	DRAWN -	REVISED -
PLOT SCALE = 20.0000 ' / in.	CHECKED -	REVISED -
PLOT DATE = 10/1/2025	DATE -	REVISED -

STATE OF ILLINOIS
DEPARTMENT OF TRANSPORTATION

MATTIS AVE.
CROSS SECTIONS

SCALE: | SHEET OF SHEETS | STA. 28+00.00 R1 TO STA. 28+50.00 R1

F.A. RTE.	SECTION	COUNTY	TOTAL SHEETS	SHEET NO.
7159	19-000314-00-PV	CHAMPAIGN	197	156
		CONTRACT NO. 91642		
		ILLINOIS	FED. AID PROJECT	

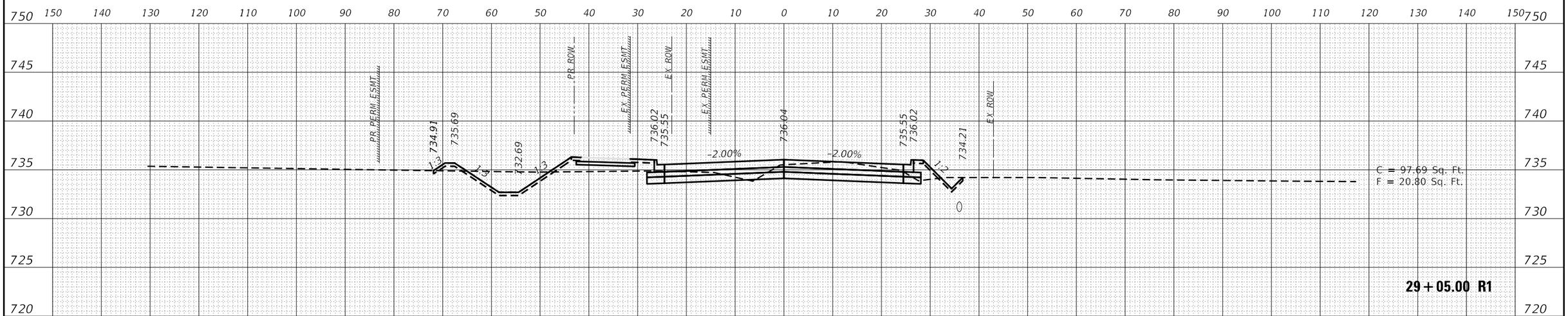

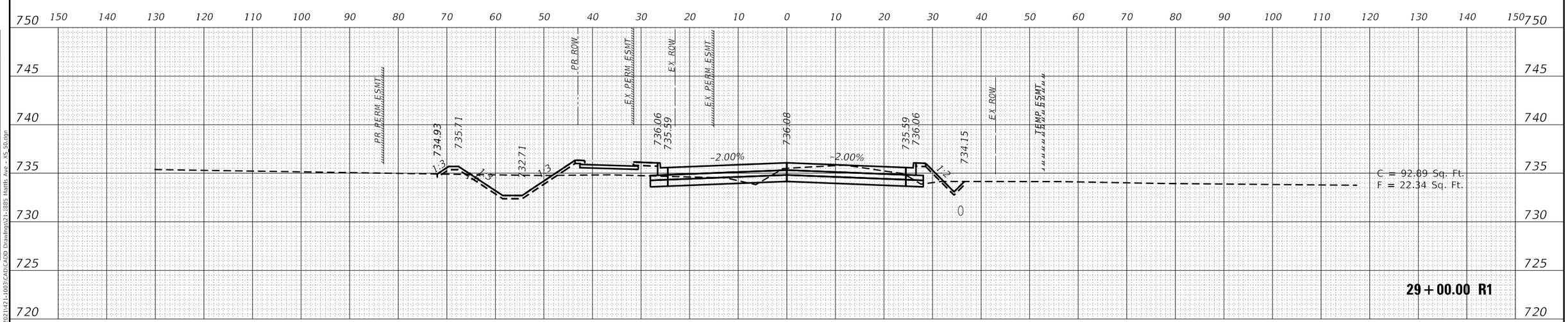

FINAL SURVEY		BY	DATE
NOTE BOOK	SURVEYED		
	PLOTTED		
	TEMPLATE		
	AREAS		
NO.	AREAS CHECKED		

ORIGINAL SURVEY		BY	DATE
NOTE BOOK	SURVEYED		
	PLOTTED		
	TEMPLATE		
	AREAS		
NO.	AREAS CHECKED		

MODEL: PR_MattisREV9_23_25
FILE NAME: X:\Production\Files\2021\421-1003\CADD Drawings\21-188S Mattis Ave - XS 50.dgn

USER NAME = Nick.Burrus	DESIGNED -	REVISED -
	DRAWN -	REVISED -
PLOT SCALE = 20.0000 ' / in.	CHECKED -	REVISED -
PLOT DATE = 10/1/2025	DATE -	REVISED -

STATE OF ILLINOIS
DEPARTMENT OF TRANSPORTATION

MATTIS AVE.
CROSS SECTIONS

SCALE: | SHEET OF SHEETS | STA. 29+00.00 R1 TO STA. 29+05.00 R1

F.A. RTE.	SECTION	COUNTY	TOTAL SHEETS	SHEET NO.
7159	19-000314-00-PV	CHAMPAIGN	197	157
		CONTRACT NO. 91642		
		ILLINOIS	FED. AID PROJECT	

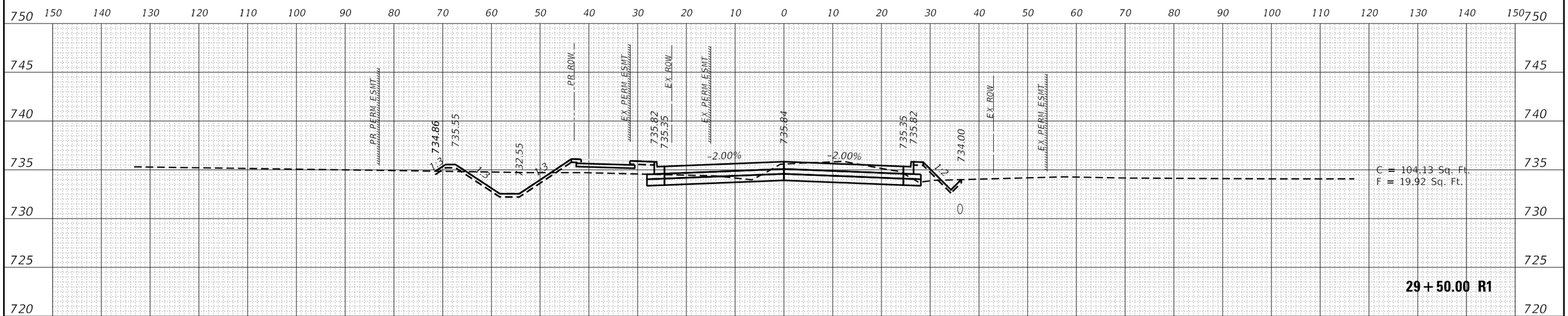

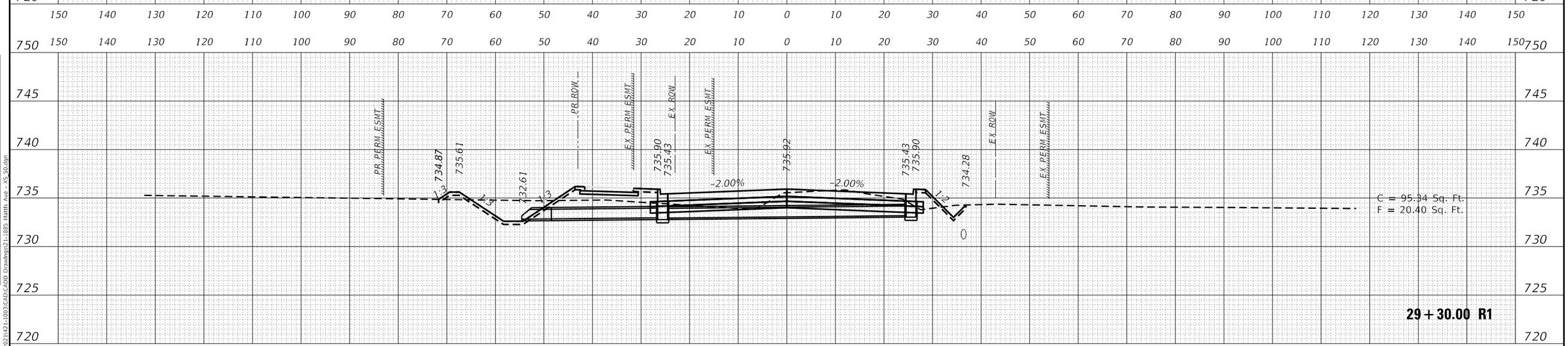

FINAL SURVEY		BY	DATE
NOTE BOOK	SURVEYED		
	PLOTTED		
	TEMPLATE		
	AREAS		
NO.	AREAS CHECKED		

ORIGINAL SURVEY		BY	DATE
NOTE BOOK	SURVEYED		
	PLOTTED		
	TEMPLATE		
	AREAS		
NO.	AREAS CHECKED		

MODEL: PR_MattisREV9_23_25
FILE NAME: X:\Production\Files\2021\421-1003\CADD Drawings\21-188S Mattis Ave - XS 50.dgn

USER NAME = Nick.Burrus	DESIGNED -	REVISED -
	DRAWN -	REVISED -
PLOT SCALE = 20.0000 ' / in.	CHECKED -	REVISED -
PLOT DATE = 10/1/2025	DATE -	REVISED -

STATE OF ILLINOIS
DEPARTMENT OF TRANSPORTATION

MATTIS AVE.
CROSS SECTIONS

SCALE: | SHEET OF SHEETS | STA. 29+30.00 R1 TO STA. 29+50.00 R1

F.A. RTE.	SECTION	COUNTY	TOTAL SHEETS	SHEET NO.
7159	19-000314-00-PV	CHAMPAIGN	197	158
		CONTRACT NO. 91642		
		ILLINOIS	FED. AID PROJECT	

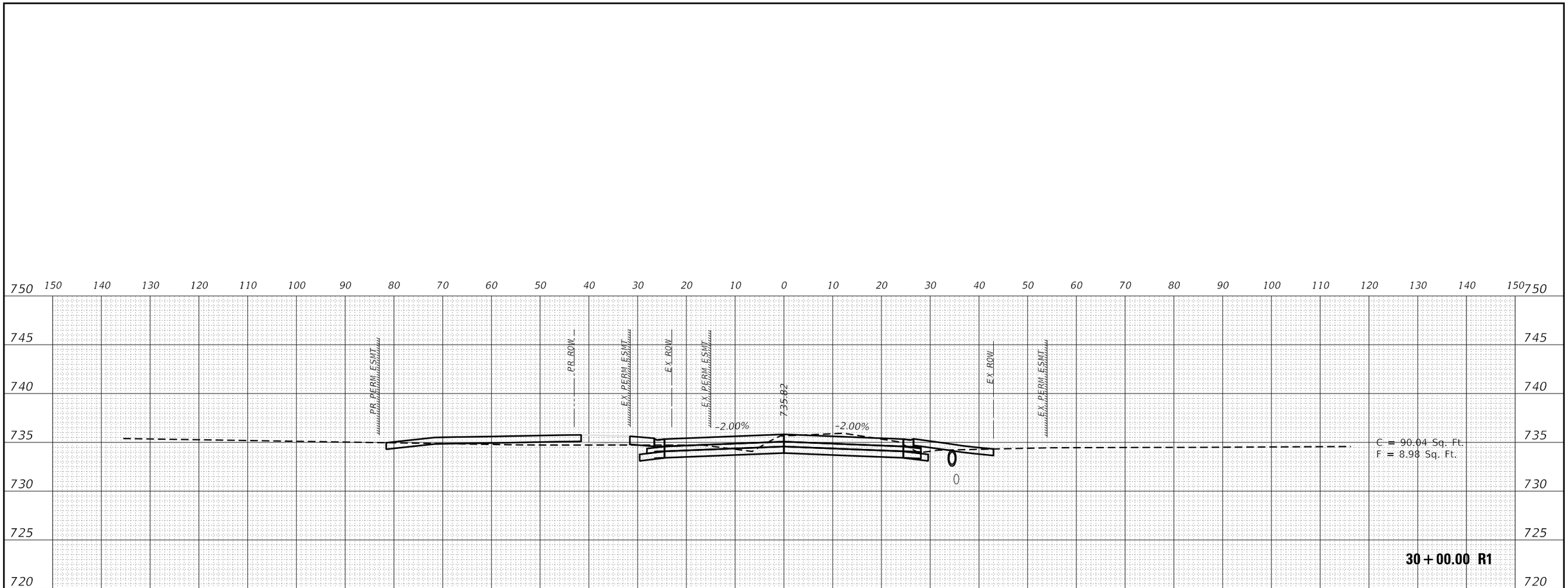

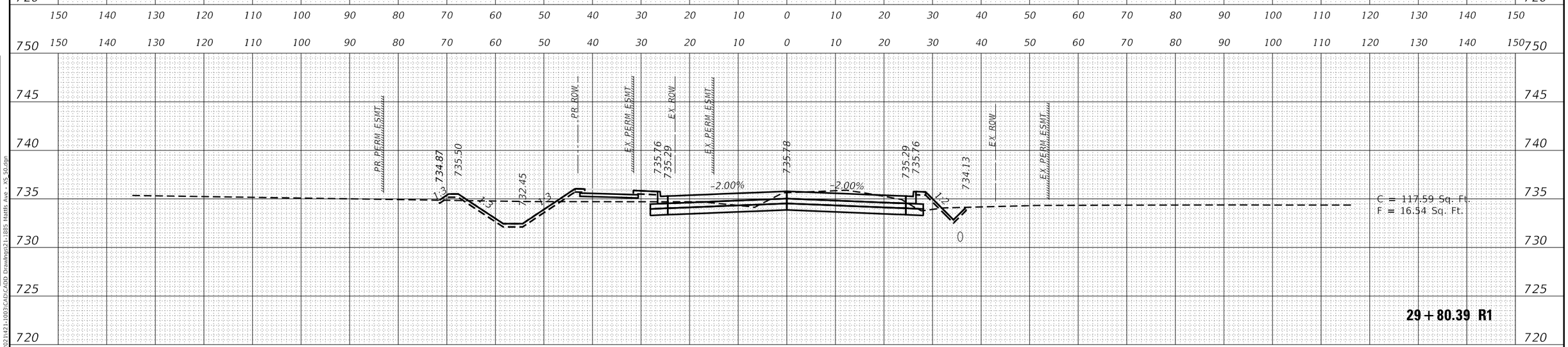

FINAL SURVEY		BY	DATE
NOTE BOOK	SURVEYED		
	PLOTTED		
	TEMPLATE		
	AREAS		
NO.	AREAS CHECKED		

ORIGINAL SURVEY		BY	DATE
NOTE BOOK	SURVEYED		
	PLOTTED		
	TEMPLATE		
	AREAS		
NO.	AREAS CHECKED		

MODEL: PR_MattisREV9_23_25
FILE NAME: X:\Production\Files\2021\421-1003\CADD Drawings\21-188S Mattis Ave - XS 30.dgn

USER NAME = Nick.Burrus	DESIGNED -	REVISED -
	DRAWN -	REVISED -
PLOT SCALE = 20.0000 ' / in.	CHECKED -	REVISED -
PLOT DATE = 10/1/2025	DATE -	REVISED -

STATE OF ILLINOIS
DEPARTMENT OF TRANSPORTATION

MATTIS AVE.
CROSS SECTIONS

SCALE: | SHEET OF SHEETS | STA. 29+80.39 R1 TO STA. 30+00.00 R1

F.A. RTE.	SECTION	COUNTY	TOTAL SHEETS	SHEET NO.
7159	19-000314-00-PV	CHAMPAIGN	197	159
		CONTRACT NO. 91642		
		ILLINOIS	FED. AID PROJECT	

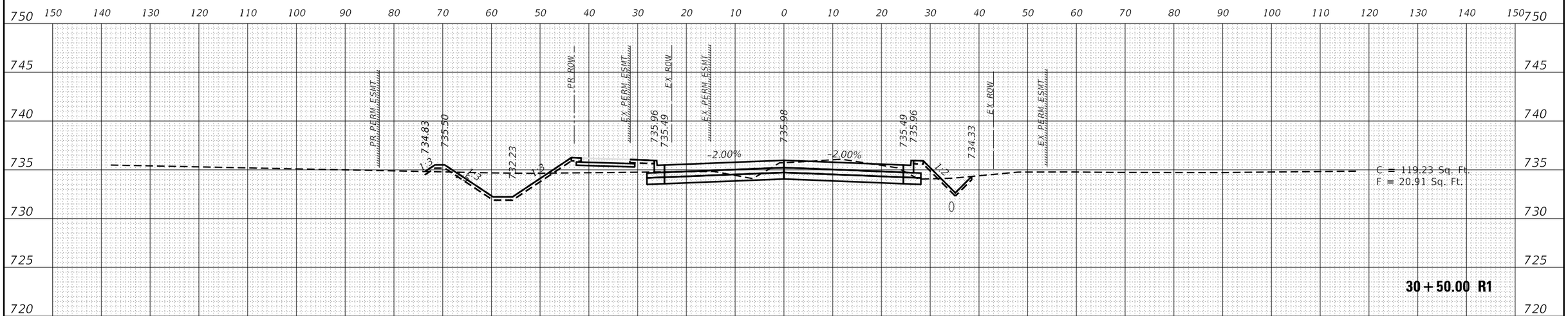

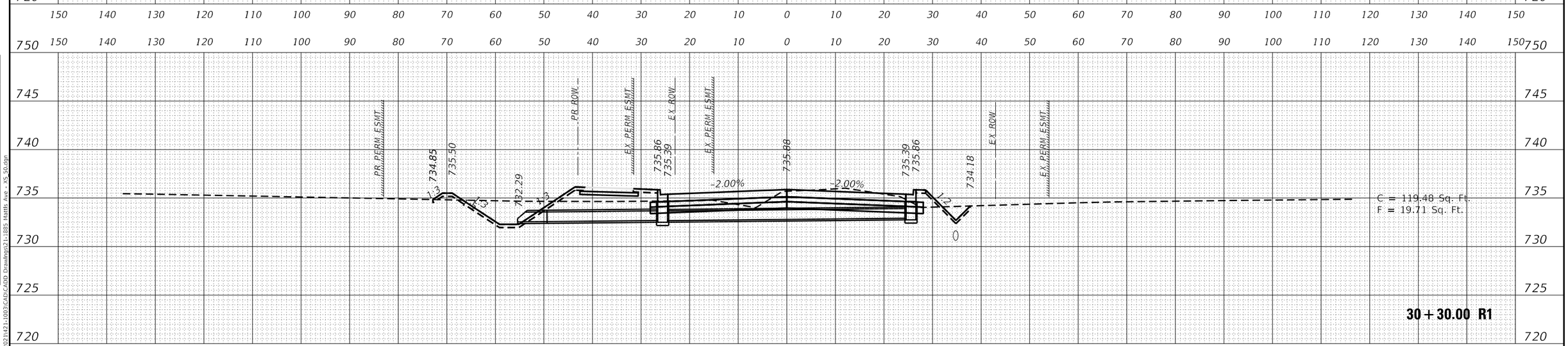

FINAL SURVEY		BY	DATE
SURVEYED			
PLOTTED			
TEMPLATE			
AREAS			
AREAS CHECKED			
NOTE BOOK			
NO.			

ORIGINAL SURVEY		BY	DATE
SURVEYED			
PLOTTED			
TEMPLATE			
AREAS			
AREAS CHECKED			
NOTE BOOK			
NO.			

MODEL: PR_MattisREV9_23_25
FILE NAME: X:\Production\Files\2021\421-1003\CAD\CADD Drawings\21-1885 Mattis Ave - XS 50.dgn

USER NAME = Nick.Burrus	DESIGNED -	REVISED -
	DRAWN -	REVISED -
PLOT SCALE = 20.0000 ' / in.	CHECKED -	REVISED -
PLOT DATE = 10/1/2025	DATE -	REVISED -

STATE OF ILLINOIS
DEPARTMENT OF TRANSPORTATION

MATTIS AVE.
CROSS SECTIONS

SCALE: | SHEET OF SHEETS | STA. 30+30.00 R1 TO STA. 30+50.00 R1

F.A. RTE.	SECTION	COUNTY	TOTAL SHEETS	SHEET NO.
7159	19-000314-00-PV	CHAMPAIGN	197	160
		CONTRACT NO. 91642		
		ILLINOIS	FED. AID PROJECT	

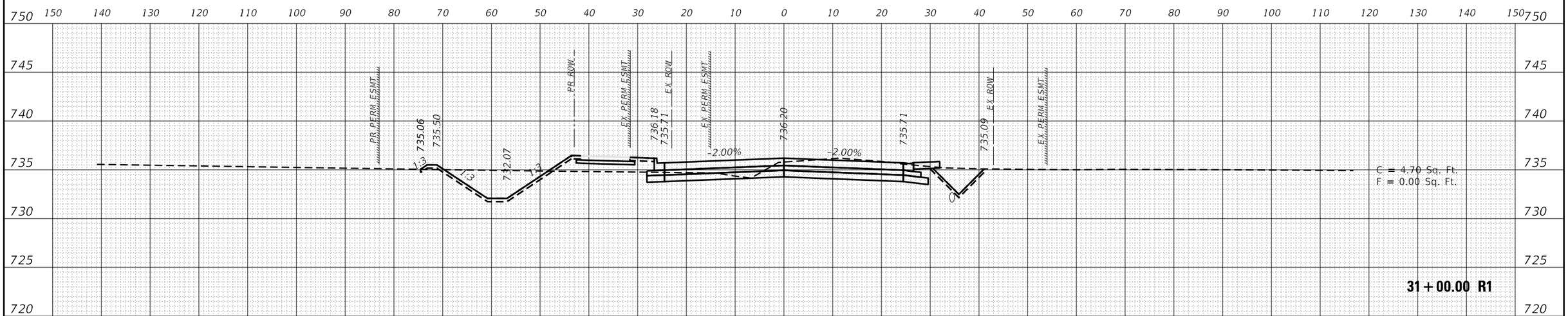

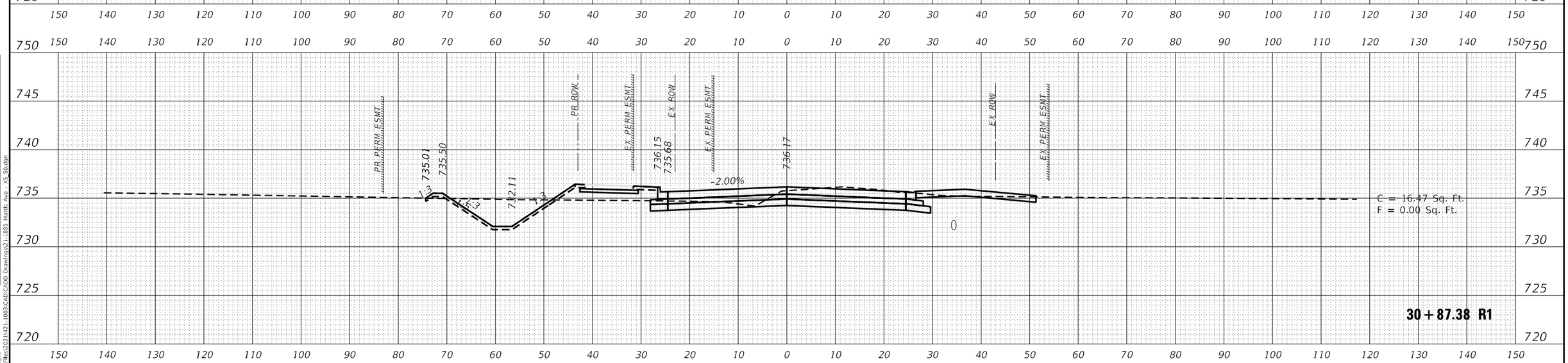

FINAL SURVEY	BY	DATE
SURVEYED		
PLOTTED		
TEMPLATE		
AREAS		
AREAS CHECKED		
NOTE BOOK NO.		

ORIGINAL SURVEY	BY	DATE
SURVEYED		
PLOTTED		
TEMPLATE		
AREAS		
AREAS CHECKED		
NOTE BOOK NO.		

MODEL: PR_MattisREV9_23_25
FILE NAME: X:\Production\Files\2021\421-1003\CADD Drawings\21-188S Mattis Ave - XS 30.dgn

USER NAME = Nick.Burrus	DESIGNED -	REVISED -
	DRAWN -	REVISED -
PLOT SCALE = 20.0000 ' / in.	CHECKED -	REVISED -
PLOT DATE = 10/1/2025	DATE -	REVISED -

STATE OF ILLINOIS
DEPARTMENT OF TRANSPORTATION

MATTIS AVE.
CROSS SECTIONS

SCALE: | SHEET OF SHEETS | STA. 30+87.38 R1 TO STA. 31+00.00 R1

F.A. RTE.	SECTION	COUNTY	TOTAL SHEETS	SHEET NO.
7159	19-000314-00-PV	CHAMPAIGN	197	161
		CONTRACT NO. 91642		
		ILLINOIS	FED. AID PROJECT	

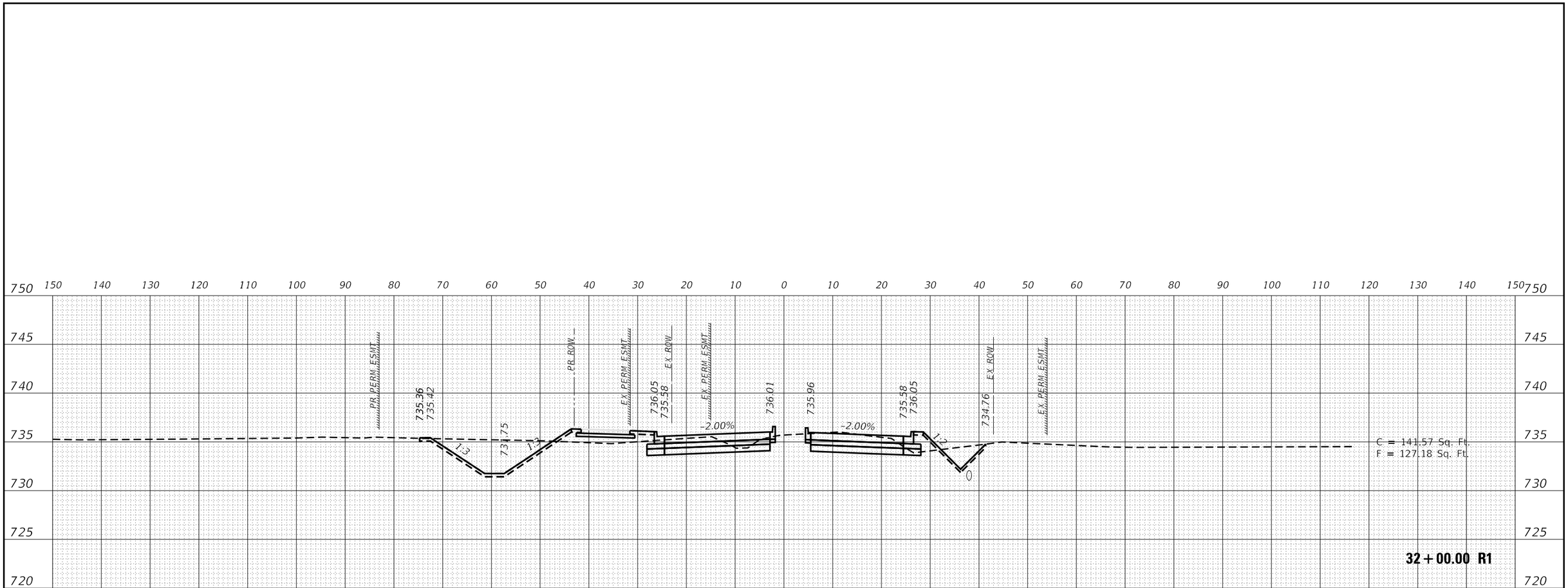

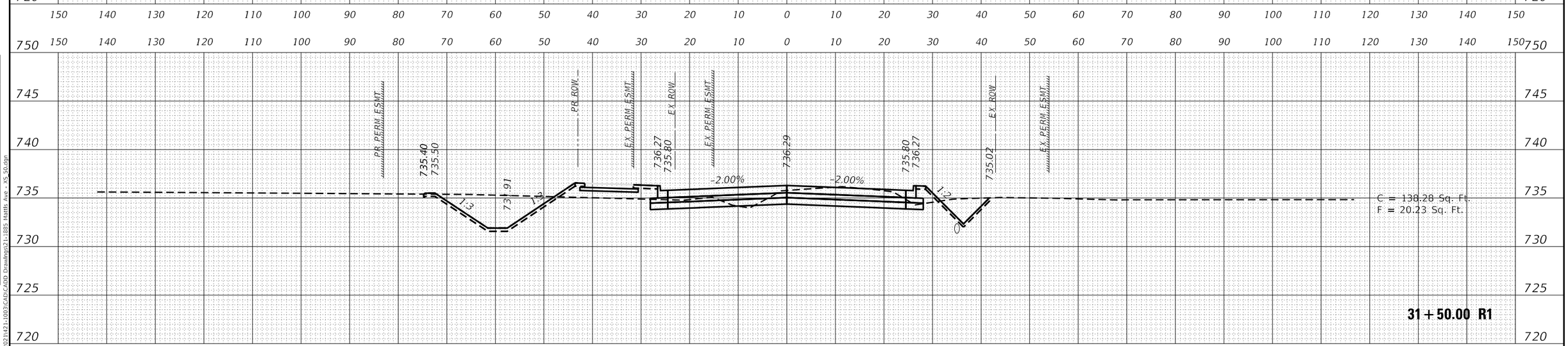

FINAL SURVEY	BY	DATE
SURVEYED		
PLOTTED		
TEMPLATE		
AREAS		
AREAS CHECKED		
NOTE BOOK NO.		

ORIGINAL SURVEY	BY	DATE
SURVEYED		
PLOTTED		
TEMPLATE		
AREAS		
AREAS CHECKED		
NOTE BOOK NO.		

MODEL: PR_MattisREV9_23_25
FILE NAME: X:\Production\Files\2021\421-1003\CADD Drawings\21-1885 Mattis Ave - XS 50.dgn

USER NAME = Nick.Burrus	DESIGNED -	REVISED -
	DRAWN -	REVISED -
PLOT SCALE = 20.0000 ' / in.	CHECKED -	REVISED -
PLOT DATE = 10/1/2025	DATE -	REVISED -

STATE OF ILLINOIS
DEPARTMENT OF TRANSPORTATION

MATTIS AVE.
CROSS SECTIONS

SCALE: | SHEET OF SHEETS | STA. 31+50.00 R1 TO STA. 32+00.00 R1

F.A. RTE.	SECTION	COUNTY	TOTAL SHEETS	SHEET NO.
7159	19-000314-00-PV	CHAMPAIGN	197	162
		CONTRACT NO. 91642		
		ILLINOIS	FED. AID PROJECT	

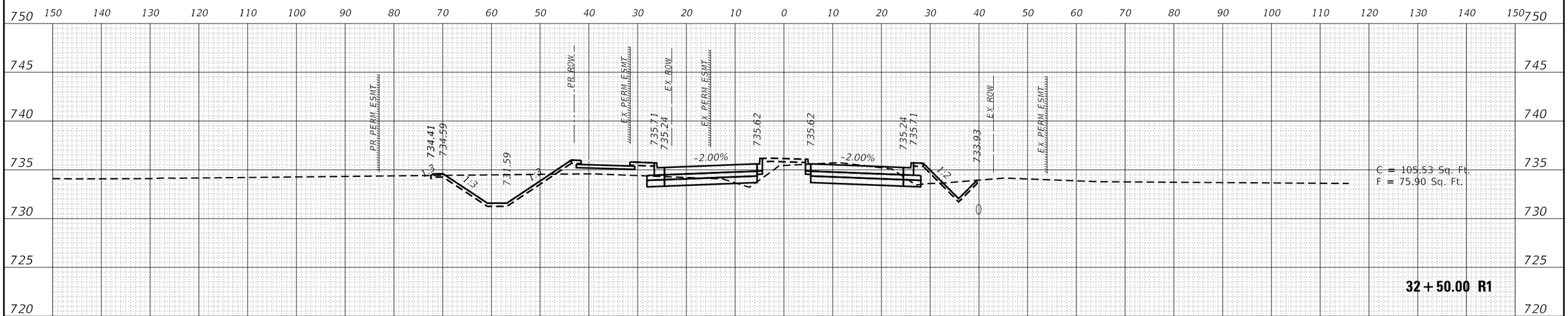

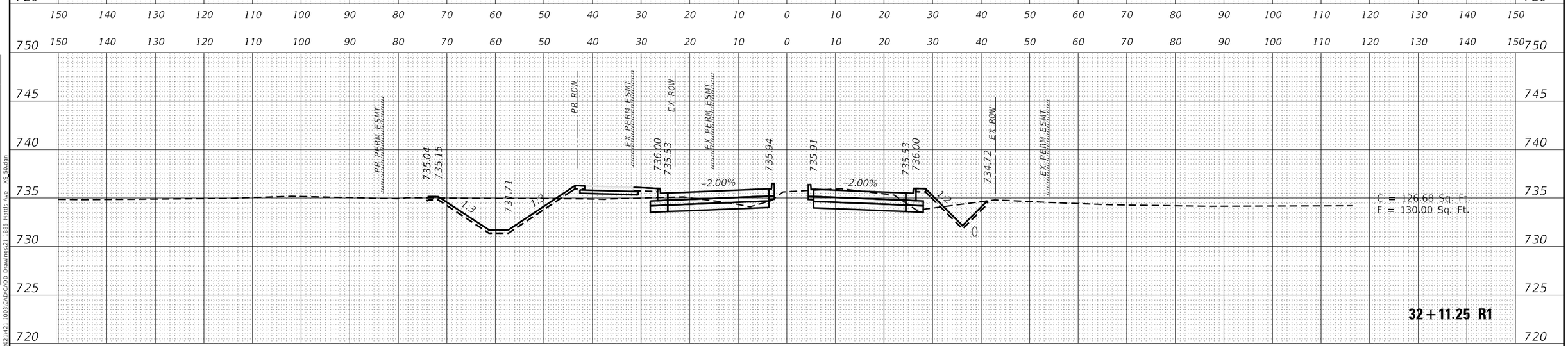

USER NAME = Nick.Burrus	DESIGNED -	REVISED -	
	DRAWN -	REVISED -	
PLOT SCALE = 20.0000 ' / in.	CHECKED -	REVISED -	
PLOT DATE = 10/1/2025	DATE -	REVISED -	

STATE OF ILLINOIS
DEPARTMENT OF TRANSPORTATION

MATTIS AVE.
CROSS SECTIONS

SCALE: SHEET OF SHEETS STA. 32+11.25 R1 TO STA. 32+50.00 R1

F.A. RTE.	SECTION	COUNTY	TOTAL SHEETS	SHEET NO.
7159	19-000314-00-PV	CHAMPAIGN	197	163
		CONTRACT NO. 91642		
		ILLINOIS FED. AID PROJECT		

FINAL SURVEY — NOTE BOOK NO. — SURVEYED — PLOTTED — TEMPLATE — AREAS — AREAS CHECKED — BY — DATE

ORIGINAL SURVEY — NOTE BOOK NO. — SURVEYED — PLOTTED — TEMPLATE — AREAS — AREAS CHECKED — BY — DATE

MODEL: PR_MattisREV9_23_25
FILE NAME: X:\Production\Files\2021\421-1003\CAD\CADD Drawings\21-1885 Mattis Ave - XS 50.dgn

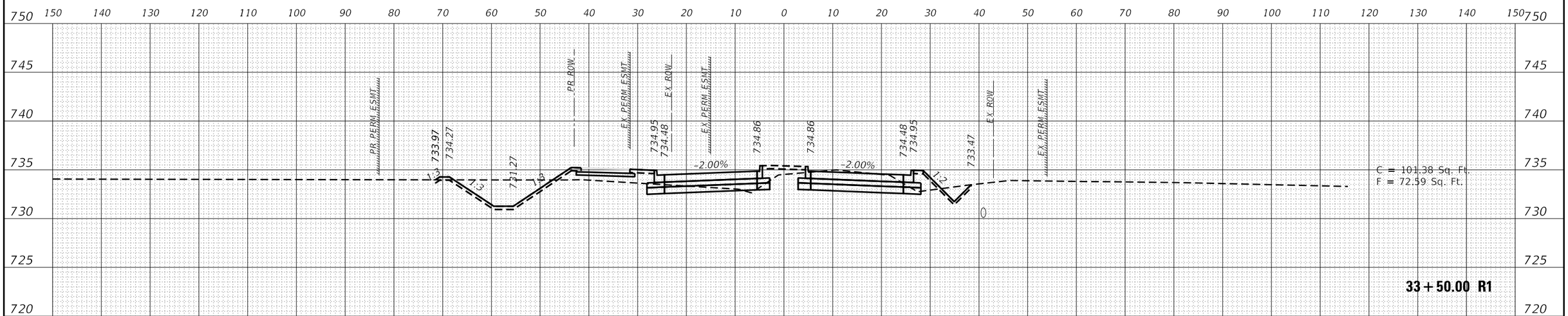

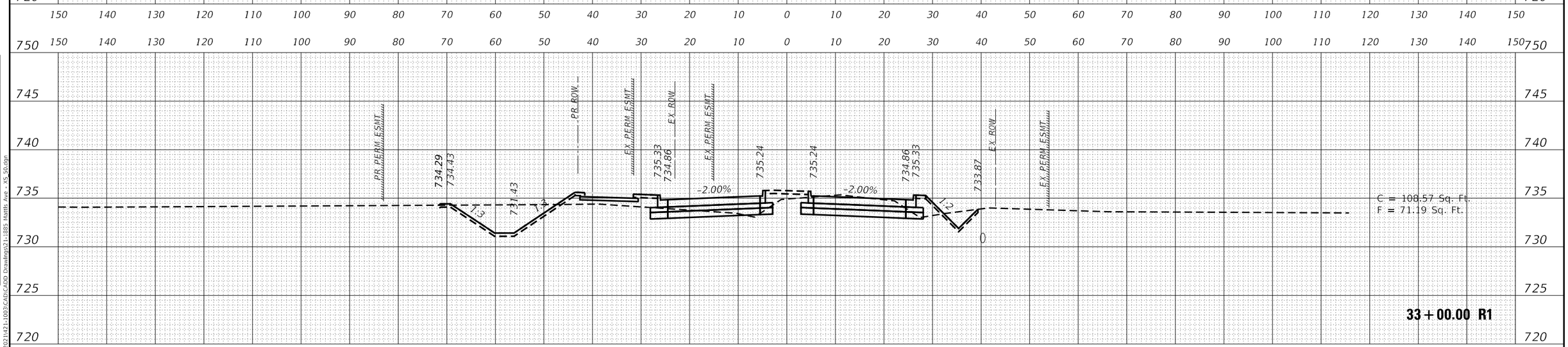

FINAL SURVEY		BY	DATE
NOTE BOOK NO.	SURVEYED		
	PLOTTED		
	TEMPLATE		
	AREAS		
	AREAS CHECKED		

ORIGINAL SURVEY		BY	DATE
NOTE BOOK NO.	SURVEYED		
	PLOTTED		
	TEMPLATE		
	AREAS		
	AREAS CHECKED		

MODEL: PR_MattisREV9_23_25
FILE NAME: X:\Production\Files\2021\21-1093\CADD Drawings\21-1885 Mattis Ave - XS 50.dgn

USER NAME = Nick.Burrus	DESIGNED -	REVISED -
	DRAWN -	REVISED -
PLOT SCALE = 20.0000 ' / in.	CHECKED -	REVISED -
PLOT DATE = 10/1/2025	DATE -	REVISED -

STATE OF ILLINOIS
DEPARTMENT OF TRANSPORTATION

MATTIS AVE.
CROSS SECTIONS

SCALE: | SHEET OF SHEETS | STA. 33+00.00 R1 TO STA. 33+50.00 R1

F.A. RTE.	SECTION	COUNTY	TOTAL SHEETS	SHEET NO.
7159	19-000314-00-PV	CHAMPAIGN	197	164
		CONTRACT NO. 91642		
		ILLINOIS	FED. AID PROJECT	

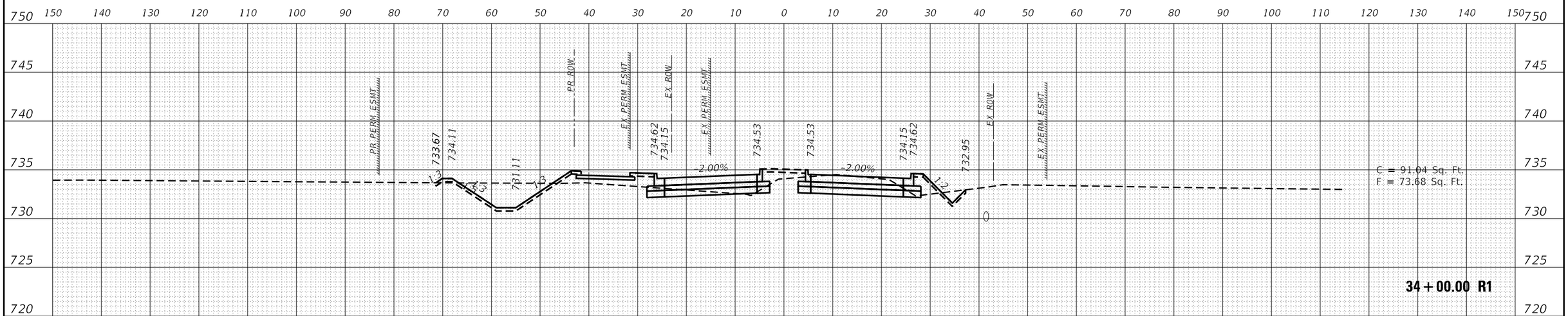

FINAL SURVEY		BY	DATE
NOTE BOOK	SURVEYED		
	PLOTTED		
	TEMPLATE		
	AREAS		
	AREAS CHECKED		
NO.			

ORIGINAL SURVEY		BY	DATE
NOTE BOOK	SURVEYED		
	PLOTTED		
	TEMPLATE		
	AREAS		
	AREAS CHECKED		
NO.			

MODEL: PR_MattisREV9_23_25
FILE NAME: X:\Production\Files\2021\421-1093\CADD Drawings\21-1885 Mattis Ave - XS 50.dgn

USER NAME = Nick.Burrus	DESIGNED -	REVISED -
	DRAWN -	REVISED -
PLOT SCALE = 20.0000 ' / in.	CHECKED -	REVISED -
PLOT DATE = 10/1/2025	DATE -	REVISED -

STATE OF ILLINOIS
DEPARTMENT OF TRANSPORTATION

MATTIS AVE.
CROSS SECTIONS

SCALE: | SHEET OF SHEETS | STA. 33+65.00 R1 TO STA. 34+00.00 R1

F.A. RTE.	SECTION	COUNTY	TOTAL SHEETS	SHEET NO.
7159	19-000314-00-PV	CHAMPAIGN	197	165
		CONTRACT NO. 91642		
		ILLINOIS	FED. AID PROJECT	

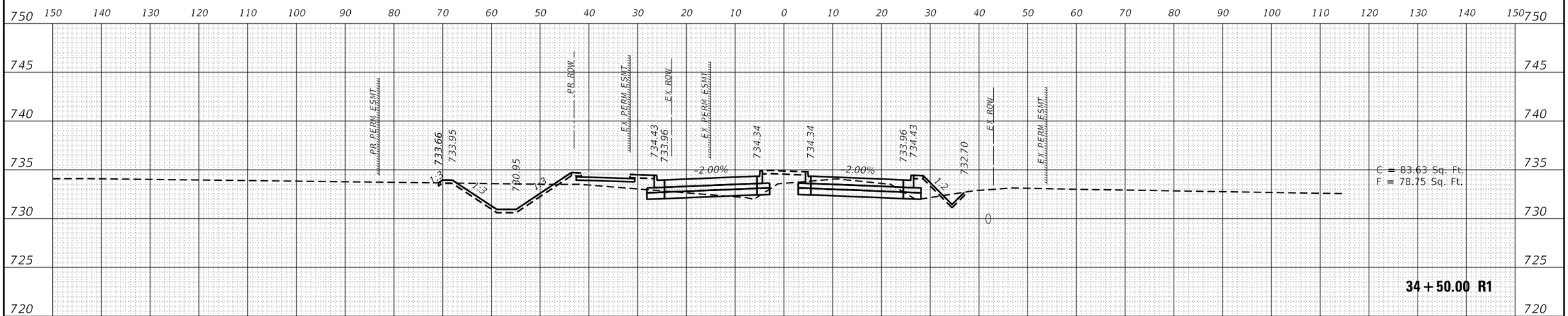

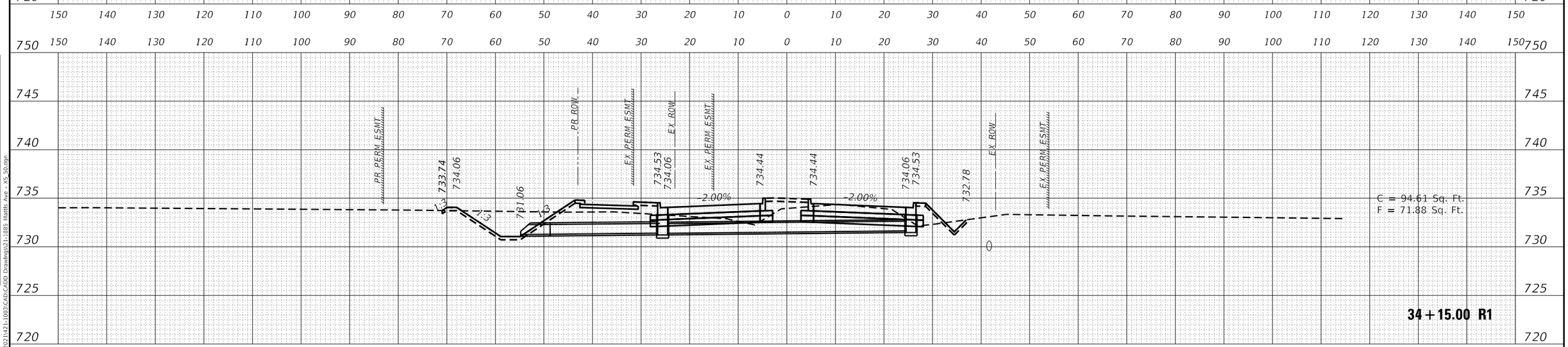

FINAL SURVEY	BY	DATE
SURVEYED		
PLOTTED		
TEMPLATE		
AREAS		
AREAS CHECKED		
NOTE BOOK NO.		

ORIGINAL SURVEY	BY	DATE
SURVEYED		
PLOTTED		
TEMPLATE		
AREAS		
AREAS CHECKED		
NOTE BOOK NO.		

MODEL: PR_MattisREV9_23_25
FILE NAME: X:\Production\Files\2021\421-1003\CADD Drawings\21-1885 Mattis Ave - XS 50.dgn

USER NAME = Nick.Burrus	DESIGNED -	REVISED -
	DRAWN -	REVISED -
PLOT SCALE = 20.0000 ' / in.	CHECKED -	REVISED -
PLOT DATE = 10/1/2025	DATE -	REVISED -

STATE OF ILLINOIS
DEPARTMENT OF TRANSPORTATION

MATTIS AVE.
CROSS SECTIONS

SCALE: | SHEET OF SHEETS | STA. 34+15.00 R1 TO STA. 34+50.00 R1

F.A. RTE.	SECTION	COUNTY	TOTAL SHEETS	SHEET NO.
7159	19-000314-00-PV	CHAMPAIGN	197	166
		CONTRACT NO. 91642		
		ILLINOIS	FED. AID PROJECT	

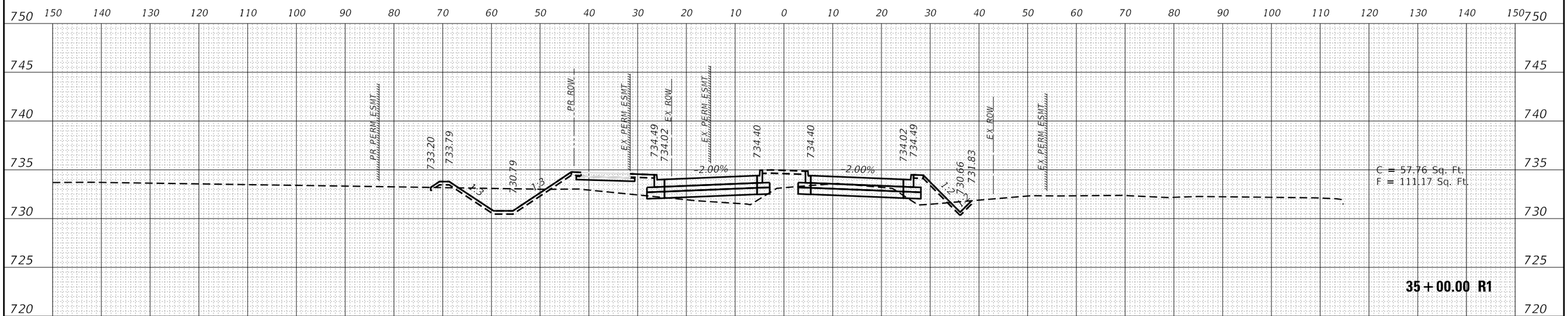

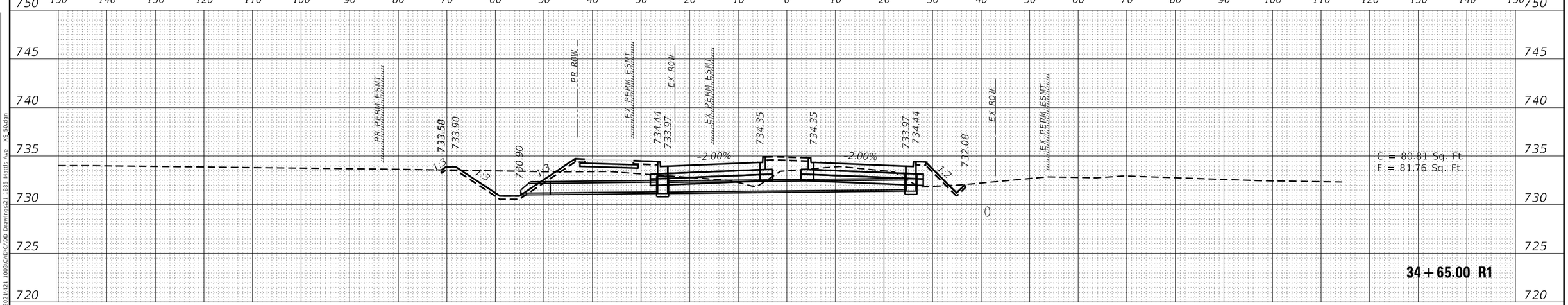

FINAL SURVEY	BY	DATE
SURVEYED		
PLOTTED		
TEMPLATE		
AREAS		
AREAS CHECKED		
NOTE BOOK		
NO.		

ORIGINAL SURVEY	BY	DATE
SURVEYED		
PLOTTED		
TEMPLATE		
AREAS		
AREAS CHECKED		
NOTE BOOK		
NO.		

MODEL: PR_MattisREV9_23_25
FILE NAME: X:\Production\Files\2021\421-1003\CADD Drawings\21-1885 Mattis Ave - XS 50.dgn

USER NAME = Nick.Burrus	DESIGNED -	REVISED -
	DRAWN -	REVISED -
PLOT SCALE = 20.0000 ' / in.	CHECKED -	REVISED -
PLOT DATE = 10/1/2025	DATE -	REVISED -

STATE OF ILLINOIS
DEPARTMENT OF TRANSPORTATION

MATTIS AVE.
CROSS SECTIONS

SCALE: | SHEET OF SHEETS | STA. 34+65.00 R1 TO STA. 35+00.00 R1

F.A. RTE.	SECTION	COUNTY	TOTAL SHEETS	SHEET NO.
7159	19-000314-00-PV	CHAMPAIGN	197	167
		CONTRACT NO. 91642		
		ILLINOIS	FED. AID PROJECT	

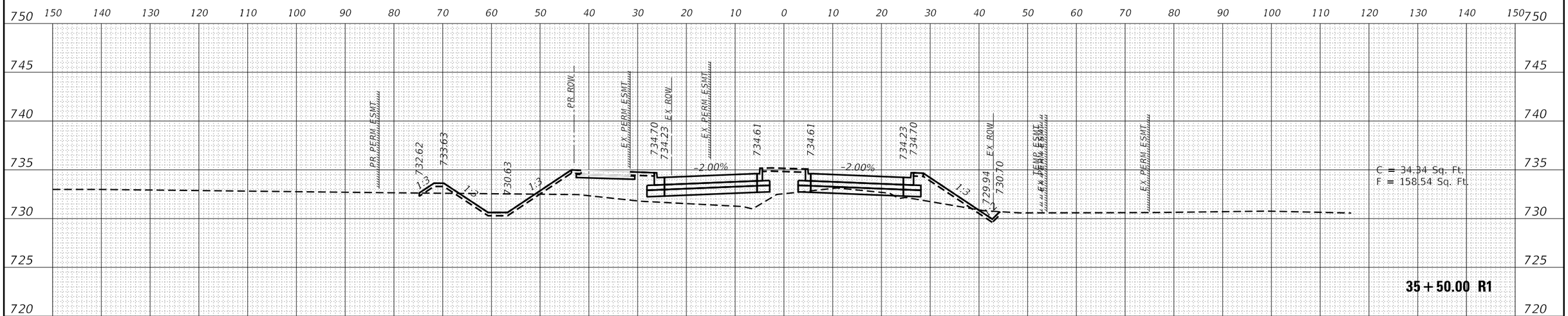

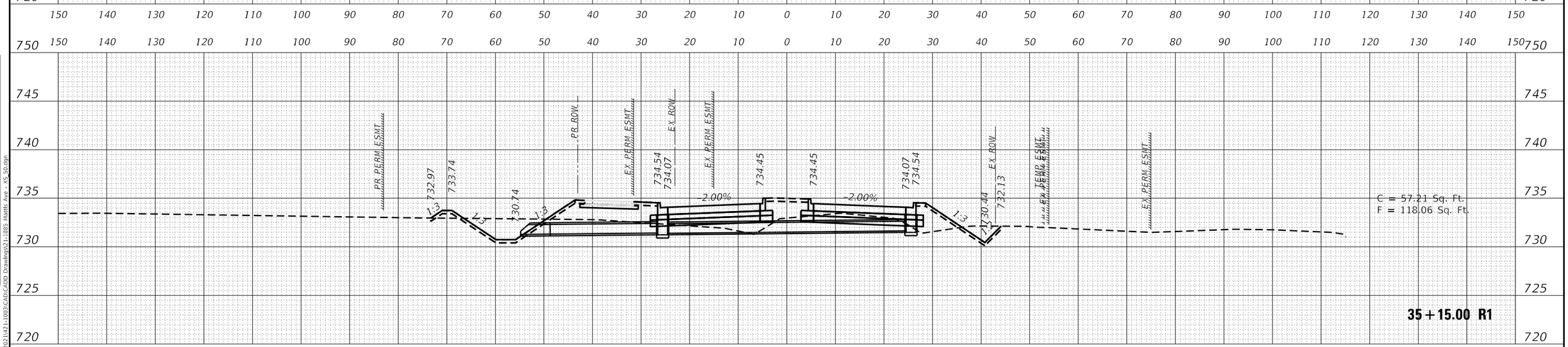

FINAL SURVEY	BY	DATE
SURVEYED		
PLOTTED		
TEMPLATE		
AREAS		
AREAS CHECKED		
NOTE BOOK NO.		

ORIGINAL SURVEY	BY	DATE
SURVEYED		
PLOTTED		
TEMPLATE		
AREAS		
AREAS CHECKED		
NOTE BOOK NO.		

MODEL: PR_MattisREV9_23_25
FILE NAME: X:\Production\Files\2021\21-1003\CADD Drawings\21-1885 Mattis Ave - XS 50.dgn

USER NAME = Nick.Burrus	DESIGNED -	REVISED -
	DRAWN -	REVISED -
PLOT SCALE = 20.0000 ' / in.	CHECKED -	REVISED -
PLOT DATE = 10/1/2025	DATE -	REVISED -

STATE OF ILLINOIS
DEPARTMENT OF TRANSPORTATION

MATTIS AVE.
CROSS SECTIONS

SCALE: | SHEET OF SHEETS | STA. 35+15.00 R1 TO STA. 35+50.00 R1

F.A. RTE.	SECTION	COUNTY	TOTAL SHEETS	SHEET NO.
7159	19-000314-00-PV	CHAMPAIGN	197	168
		CONTRACT NO. 91642		
		ILLINOIS	FED. AID PROJECT	

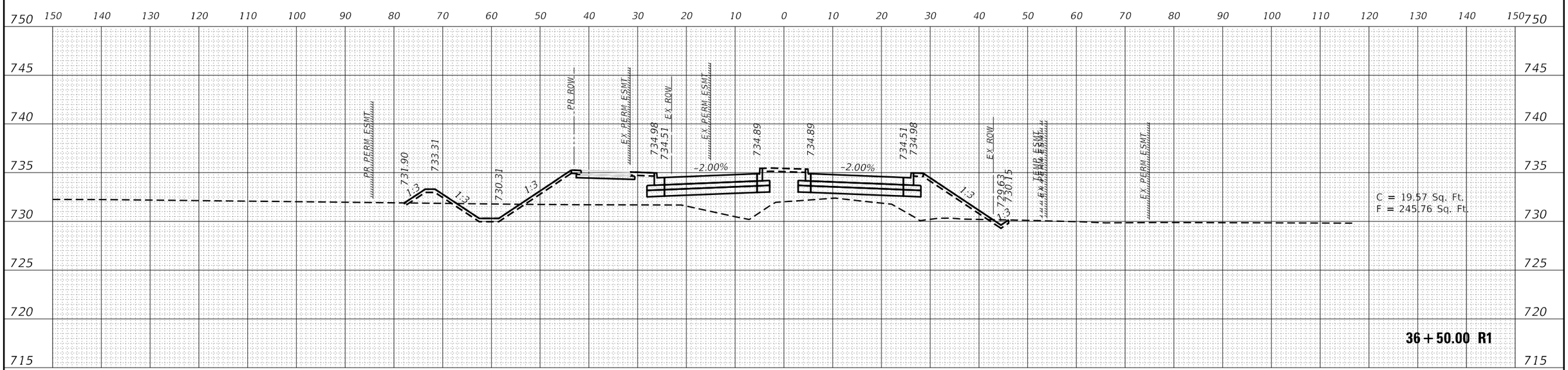

FINAL SURVEY		BY	DATE
SURVEYED			
PLOTTED			
TEMPLATE			
AREAS			
AREAS CHECKED			
NOTE BOOK			
NO.			

ORIGINAL SURVEY		BY	DATE
SURVEYED			
PLOTTED			
TEMPLATE			
AREAS			
AREAS CHECKED			
NOTE BOOK			
NO.			

MODEL: PR_MattisREV9_23_25
FILE NAME: X:\Production\Files\2021\21-1003\CADD Drawings\21-1885 Mattis Ave - XS 50.dgn

USER NAME = Nick.Burrus	DESIGNED -	REVISED -
	DRAWN -	REVISED -
PLOT SCALE = 20.0000 ' / in.	CHECKED -	REVISED -
PLOT DATE = 10/1/2025	DATE -	REVISED -

STATE OF ILLINOIS
DEPARTMENT OF TRANSPORTATION

MATTIS AVE.
CROSS SECTIONS

SCALE: | SHEET OF SHEETS | STA. 36+00.00 R1 TO STA. 36+50.00 R1

F.A. RTE.	SECTION	COUNTY	TOTAL SHEETS	SHEET NO.
7159	19-000314-00-PV	CHAMPAIGN	197	169
		CONTRACT NO. 91642		
		ILLINOIS	FED. AID PROJECT	

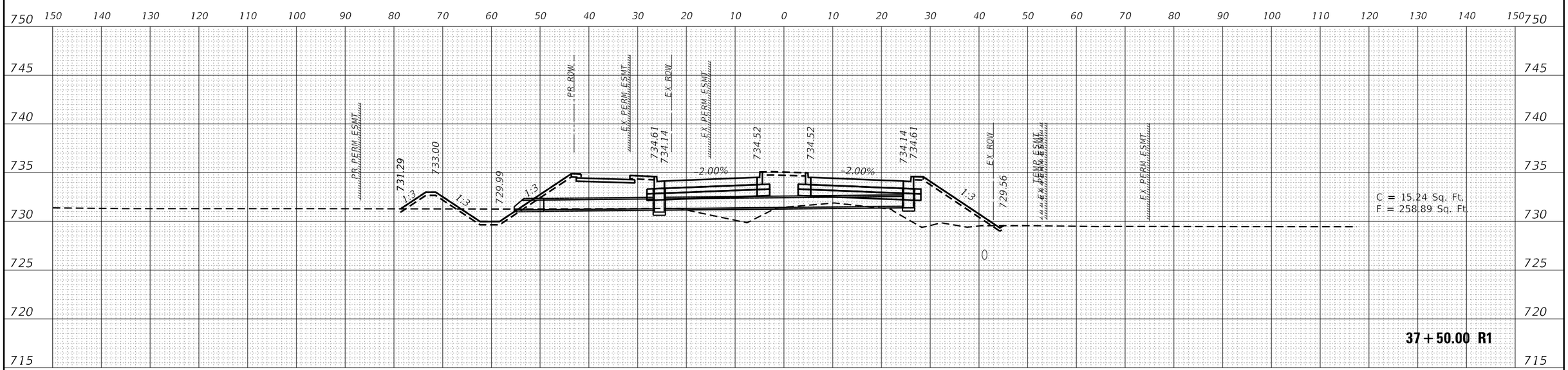

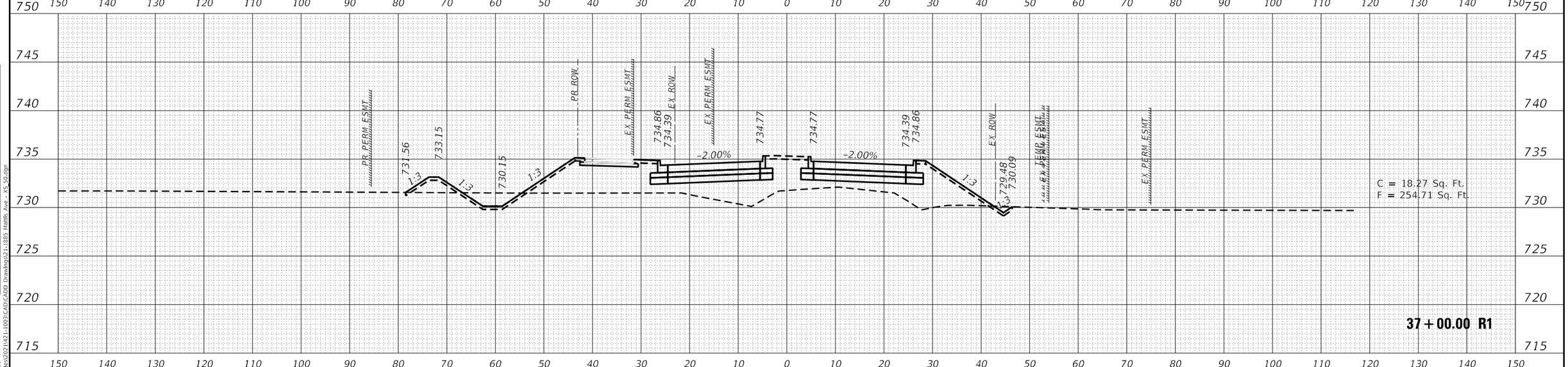

USER NAME = Nick.Burrus	DESIGNED -	REVISED -	
	DRAWN -	REVISED -	
PLOT SCALE = 20.0000 ' / in.	CHECKED -	REVISED -	
PLOT DATE = 10/1/2025	DATE -	REVISED -	

STATE OF ILLINOIS
DEPARTMENT OF TRANSPORTATION

MATTIS AVE.
CROSS SECTIONS

SCALE: | SHEET OF SHEETS | STA. 37+00.00 R1 TO STA. 37+50.00 R1

F.A. RTE.	SECTION	COUNTY	TOTAL SHEETS	SHEET NO.
7159	19-000314-00-PV	CHAMPAIGN	197	170
		CONTRACT NO. 91642		
		ILLINOIS	FED. AID PROJECT	

FINAL SURVEY | NOTE BOOK NO. | SURVEYED | PLOTTED | TEMPLATE | AREAS | AREAS CHECKED | BY | DATE

ORIGINAL SURVEY | NOTE BOOK NO. | SURVEYED | PLOTTED | TEMPLATE | AREAS | AREAS CHECKED | BY | DATE

MODEL: PR_MattisREV9_23_25
FILE NAME: X:\Production\Files\2021\21-1003\CADD Drawings\21-1885 Mattis Ave - XS 50.dgn

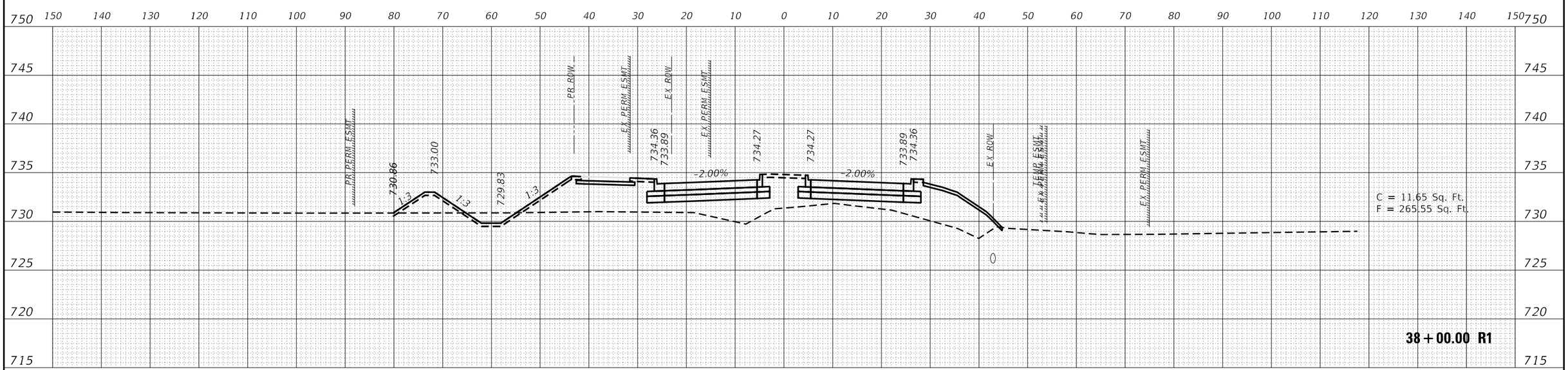

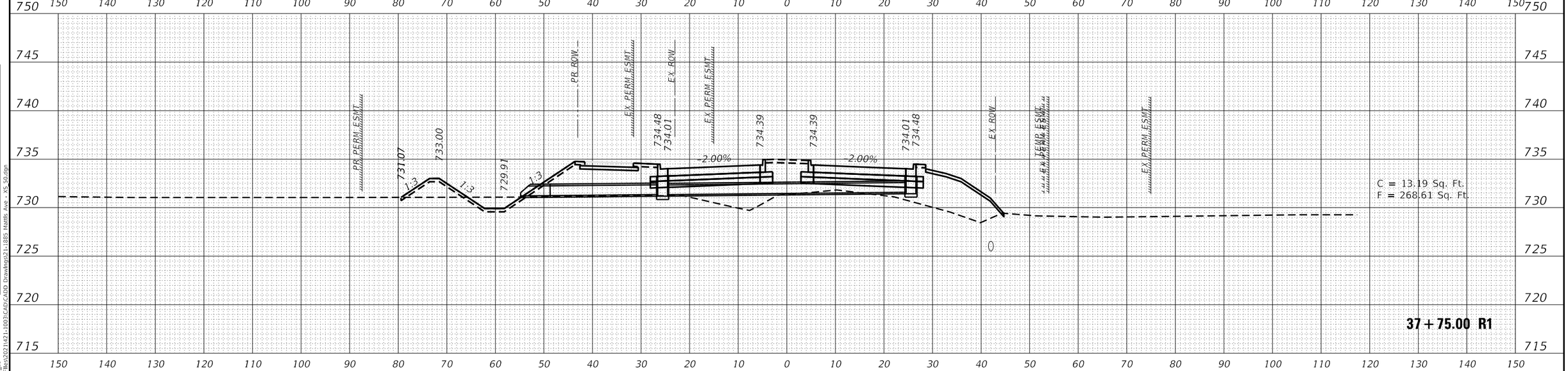

FINAL SURVEY		BY	DATE
NOTE BOOK	SURVEYED		
	PLOTTED		
	TEMPLATE		
	AREAS		
NO.	AREAS CHECKED		

ORIGINAL SURVEY		BY	DATE
NOTE BOOK	SURVEYED		
	PLOTTED		
	TEMPLATE		
	AREAS		
NO.	AREAS CHECKED		

MODEL: PR_MattisREV9_23_25
FILE NAME: X:\Production\files\2021\21-1003\CADD Drawings\21-1885 Mattis Ave - XS 50.dgn

USER NAME = Nick.Burrus	DESIGNED -	REVISED -	
	DRAWN -	REVISED -	
PLOT SCALE = 20.0000 ' / in.	CHECKED -	REVISED -	
PLOT DATE = 10/1/2025	DATE -	REVISED -	

STATE OF ILLINOIS
DEPARTMENT OF TRANSPORTATION

MATTIS AVE.
CROSS SECTIONS

SCALE: | SHEET OF SHEETS | STA. 37+75.00 R1 TO STA. 38+00.00 R1

F.A. RTE.	SECTION	COUNTY	TOTAL SHEETS	SHEET NO.
7159	19-000314-00-PV	CHAMPAIGN	197	171
		CONTRACT NO. 91642		
		ILLINOIS	FED. AID PROJECT	

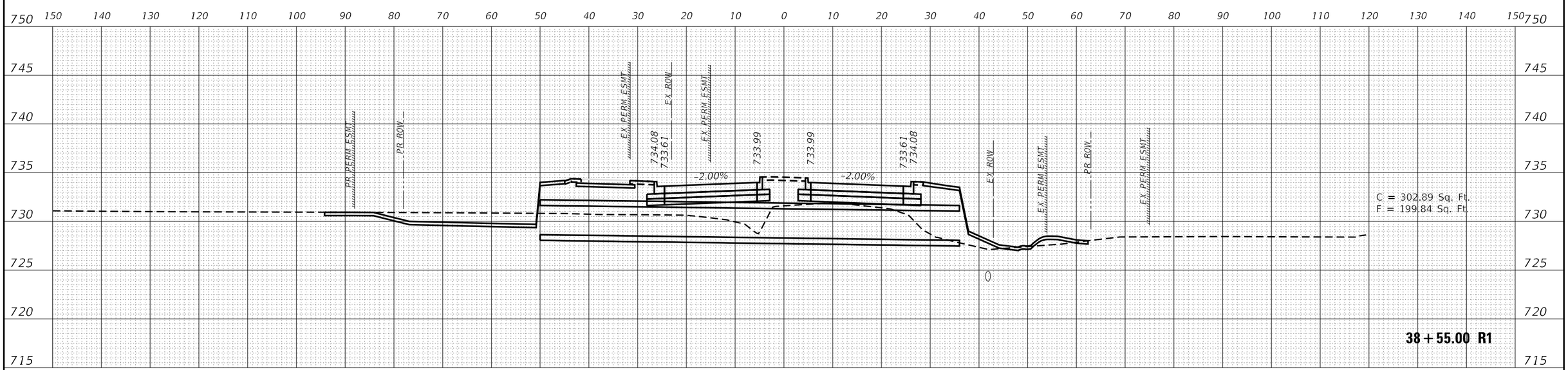

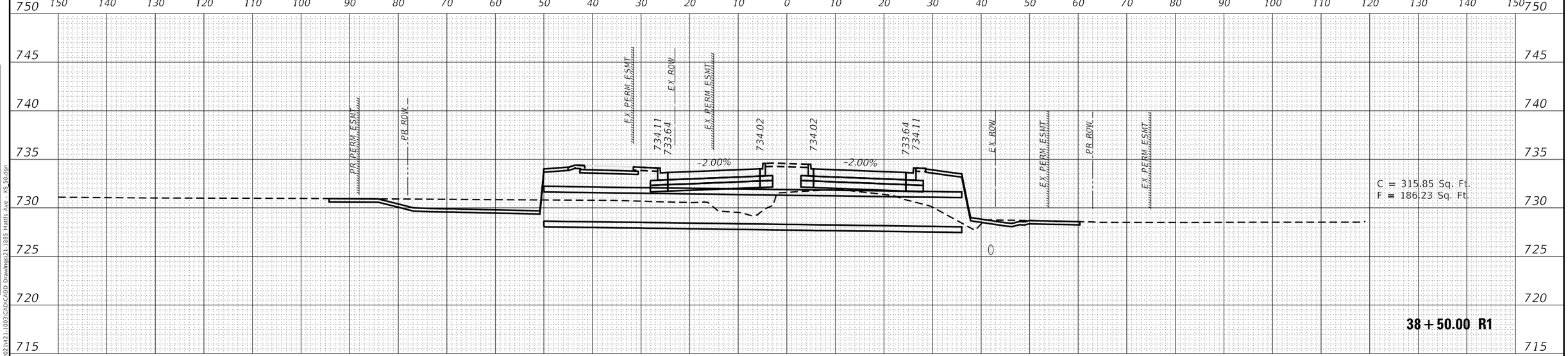

FINAL SURVEY	DATE	BY
SURVEYED		
PLOTTED		
TEMPLATE		
AREAS		
AREAS CHECKED		
NOTE BOOK NO.		

ORIGINAL SURVEY	DATE	BY
SURVEYED		
PLOTTED		
TEMPLATE		
AREAS		
AREAS CHECKED		
NOTE BOOK NO.		

MODEL: PR_MattisREV9_23_25
FILE NAME: X:\Production\Files\2021\21-1003\CADD Drawings\21-1885 Mattis Ave - XS 50.dgn

USER NAME = Nick.Burrus	DESIGNED -	REVISED -	
	DRAWN -	REVISED -	
PLOT SCALE = 20.0000 ' / in.	CHECKED -	REVISED -	
PLOT DATE = 10/1/2025	DATE -	REVISED -	

STATE OF ILLINOIS
DEPARTMENT OF TRANSPORTATION

MATTIS AVE.
CROSS SECTIONS

SCALE: | SHEET OF SHEETS | STA. 38+50.00 R1 TO STA. 38+55.00 R1

F.A. RTE.	SECTION	COUNTY	TOTAL SHEETS	SHEET NO.
7159	19-000314-00-PV	CHAMPAIGN	197	172
		CONTRACT NO. 91642		
		ILLINOIS	FED. AID PROJECT	

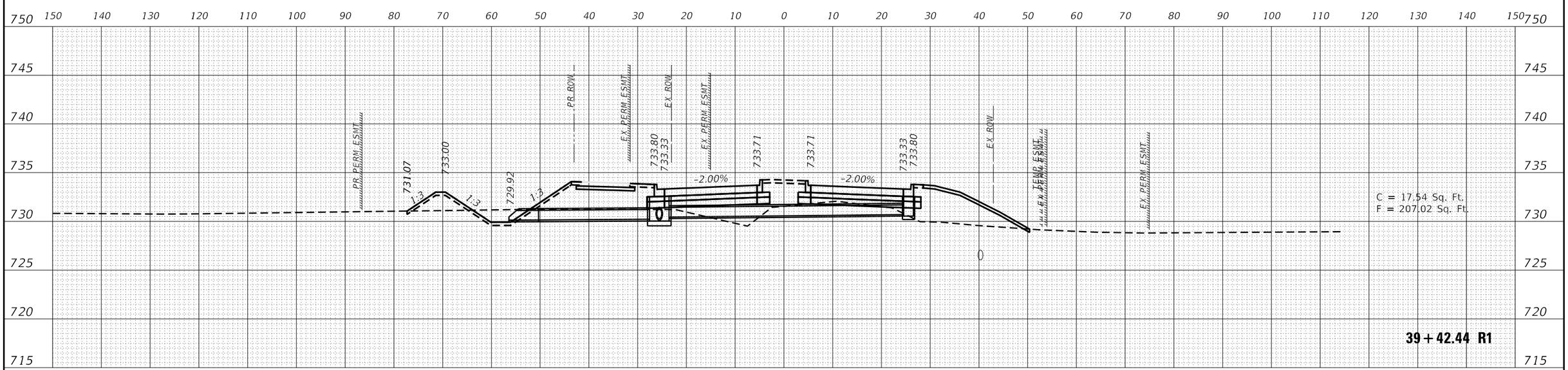

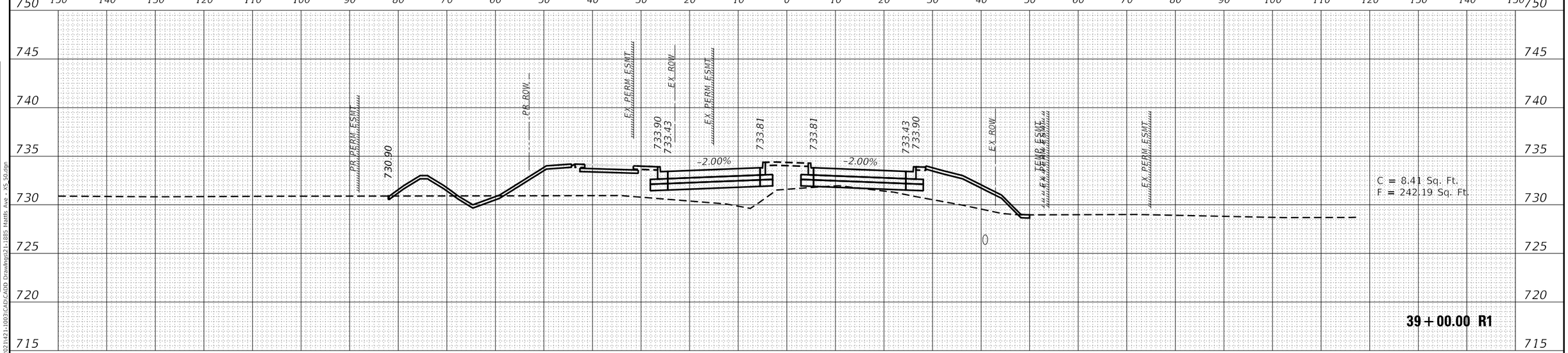

FINAL SURVEY	DATE	BY
SURVEYED		
PLOTTED		
TEMPLATE		
AREAS		
AREAS CHECKED		
NOTE BOOK		
NO.		

ORIGINAL SURVEY	DATE	BY
SURVEYED		
PLOTTED		
TEMPLATE		
AREAS		
AREAS CHECKED		
NOTE BOOK		
NO.		

MODEL: PR_MattisREV9_23_25
FILE NAME: X:\Production\Files\2021\21-1003\CADD Drawings\21-1885 Mattis Ave - XS 50.dgn

USER NAME = Nick.Burrus	DESIGNED -	REVISED -	
	DRAWN -	REVISED -	
PLOT SCALE = 20.0000 ' / in.	CHECKED -	REVISED -	
PLOT DATE = 10/1/2025	DATE -	REVISED -	

STATE OF ILLINOIS
DEPARTMENT OF TRANSPORTATION

MATTIS AVE.
CROSS SECTIONS

SCALE: | SHEET OF SHEETS | STA. 39+00.00 R1 TO STA. 39+42.44 R1

F.A. RTE.	SECTION	COUNTY	TOTAL SHEETS	SHEET NO.
7159	19-000314-00-PV	CHAMPAIGN	197	173
		CONTRACT NO. 91642		
		ILLINOIS	FED. AID PROJECT	

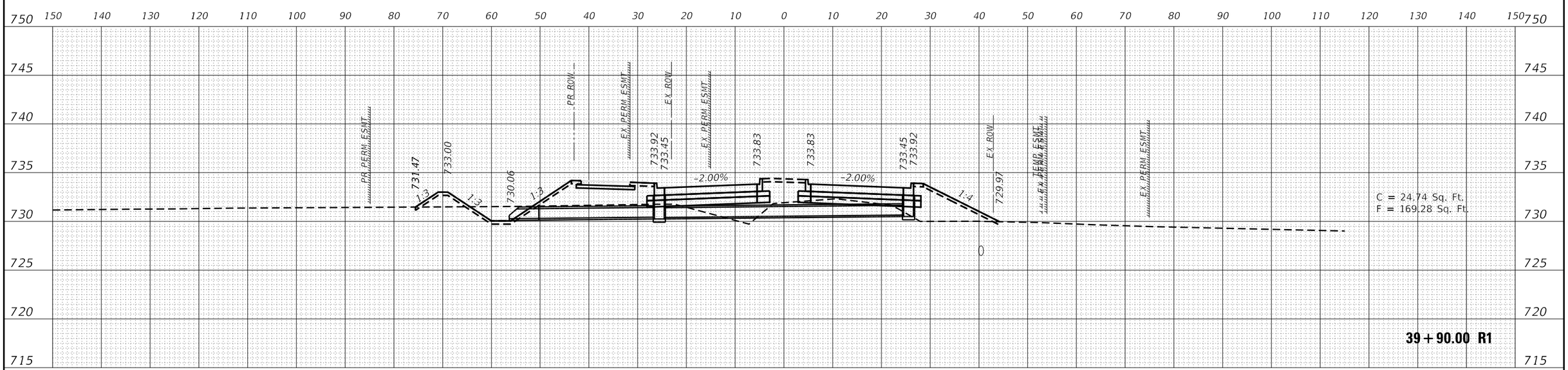

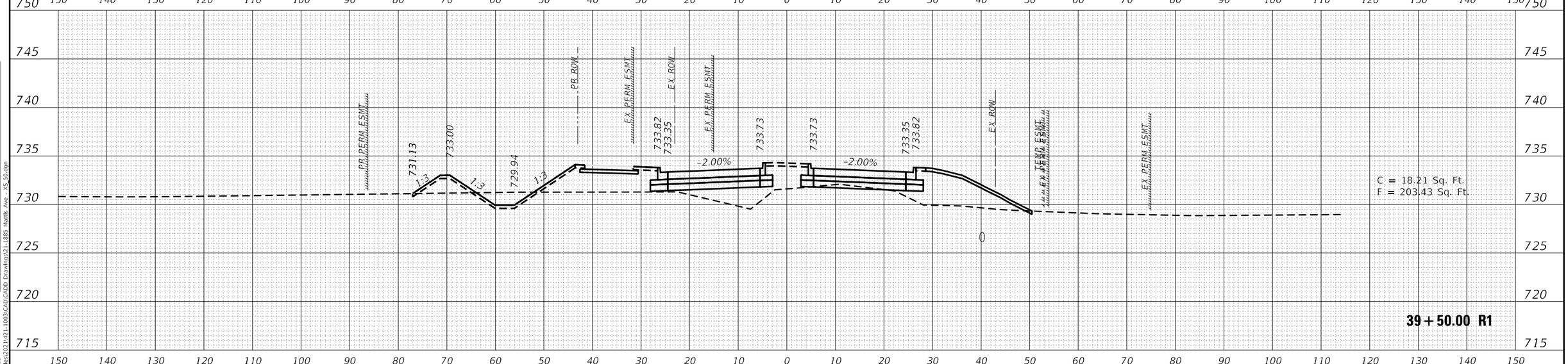

USER NAME = Nick.Burrus	DESIGNED -	REVISED -	
	DRAWN -	REVISED -	
PLOT SCALE = 20.0000 ' / in.	CHECKED -	REVISED -	
PLOT DATE = 10/1/2025	DATE -	REVISED -	

STATE OF ILLINOIS
DEPARTMENT OF TRANSPORTATION

MATTIS AVE.
CROSS SECTIONS

SCALE: | SHEET OF SHEETS | STA. 39+50.00 R1 TO STA. 39+90.00 R1

F.A. RTE.	SECTION	COUNTY	TOTAL SHEETS	SHEET NO.
7159	19-000314-00-PV	CHAMPAIGN	197	174
		CONTRACT NO. 91642		
		ILLINOIS	FED. AID PROJECT	

FINAL SURVEY — NOTE BOOK NO. — SURVEYED — PLOTTED — TEMPLATE — AREAS — AREAS CHECKED — BY — DATE

ORIGINAL SURVEY — NOTE BOOK NO. — SURVEYED — PLOTTED — TEMPLATE — AREAS — AREAS CHECKED — BY — DATE

MODEL: PR_MattisREV9_23_25
FILE NAME: X:\Production\Files\2021\21-1003\CADD Drawings\21-1885 Mattis Ave - XS 50.dgn

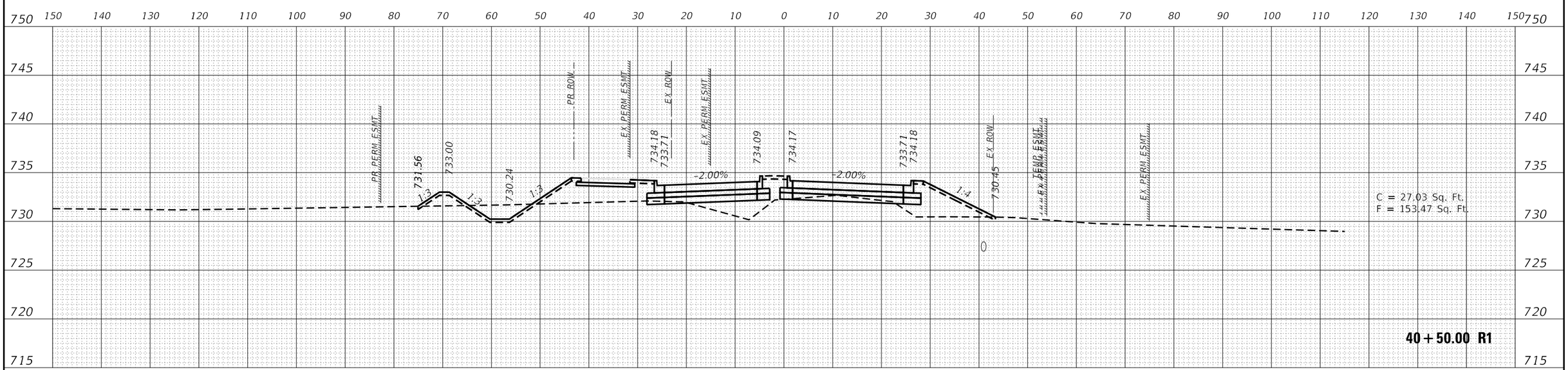

USER NAME = Nick.Burrus	DESIGNED -	REVISED -	
	DRAWN -	REVISED -	
PLOT SCALE = 20.0000 ' / in.	CHECKED -	REVISED -	
PLOT DATE = 10/1/2025	DATE -	REVISED -	

STATE OF ILLINOIS
DEPARTMENT OF TRANSPORTATION

MATTIS AVE.
CROSS SECTIONS

SCALE: | SHEET OF SHEETS | STA. 40+00.00 R1 TO STA. 40+50.00 R1

F.A. RTE.	SECTION	COUNTY	TOTAL SHEETS	SHEET NO.
7159	19-000314-00-PV	CHAMPAIGN	197	175
		CONTRACT NO. 91642		
		ILLINOIS	FED. AID PROJECT	

FINAL SURVEY — NOTE BOOK NO. — SURVEYED — PLOTTED — TEMPLATE — AREAS — AREAS CHECKED — BY — DATE

ORIGINAL SURVEY — NOTE BOOK NO. — SURVEYED — PLOTTED — TEMPLATE — AREAS — AREAS CHECKED — BY — DATE

MODEL: PR_MattisREV9_23_25
FILE NAME: X:\Production\Files\2021\21-1003\CADD Drawings\21-1885 Mattis Ave - XS 50.dgn

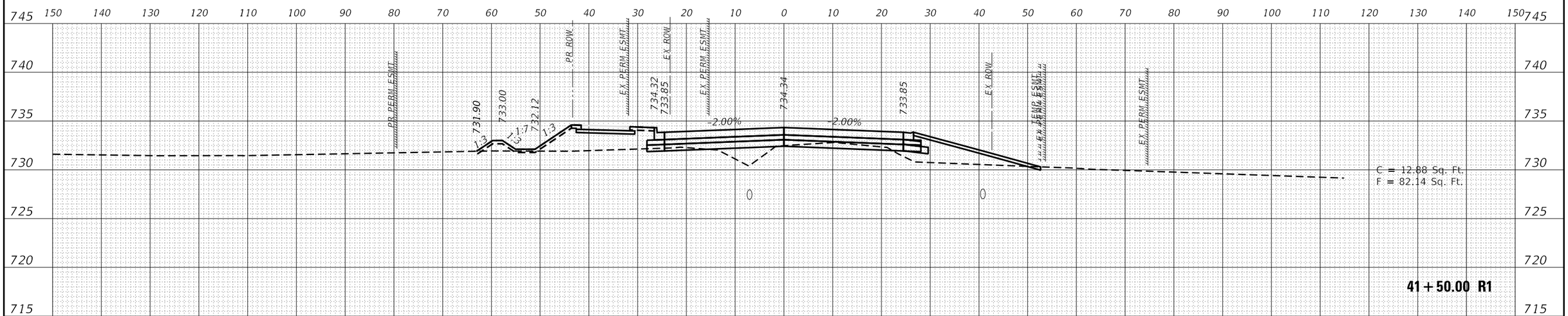

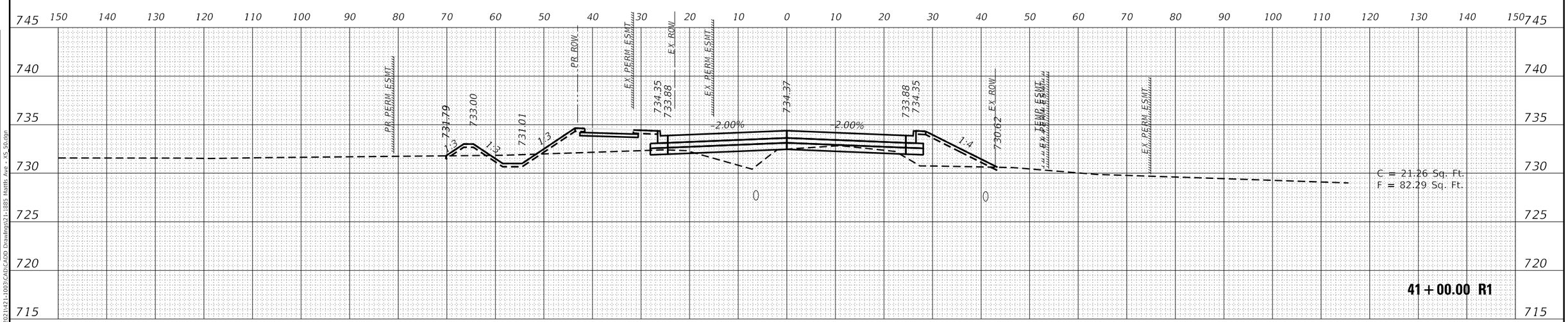

FINAL SURVEY		BY	DATE
NOTE BOOK	SURVEYED		
	PLOTTED		
	TEMPLATE		
	AREAS		
NO.	AREAS CHECKED		

ORIGINAL SURVEY		BY	DATE
NOTE BOOK	SURVEYED		
	PLOTTED		
	TEMPLATE		
	AREAS		
NO.	AREAS CHECKED		

MODEL: PR_MattisREV9_23_25
FILE NAME: X:\Production\Files\2021\421-1003\CADD Drawings\21-188S Mattis Ave - XS 50.dgn

USER NAME = Nick.Burrus	DESIGNED -	REVISED -	
	DRAWN -	REVISED -	
PLOT SCALE = 20.0000 ' / in.	CHECKED -	REVISED -	
PLOT DATE = 10/1/2025	DATE -	REVISED -	

STATE OF ILLINOIS
DEPARTMENT OF TRANSPORTATION

MATTIS AVE.
CROSS SECTIONS

SCALE: | SHEET OF SHEETS | STA. 41+00.00 R1 TO STA. 41+50.00 R1

F.A. RTE.	SECTION	COUNTY	TOTAL SHEETS	SHEET NO.
7159	19-000314-00-PV	CHAMPAIGN	197	176
		CONTRACT NO. 91642		
		ILLINOIS	FED. AID PROJECT	

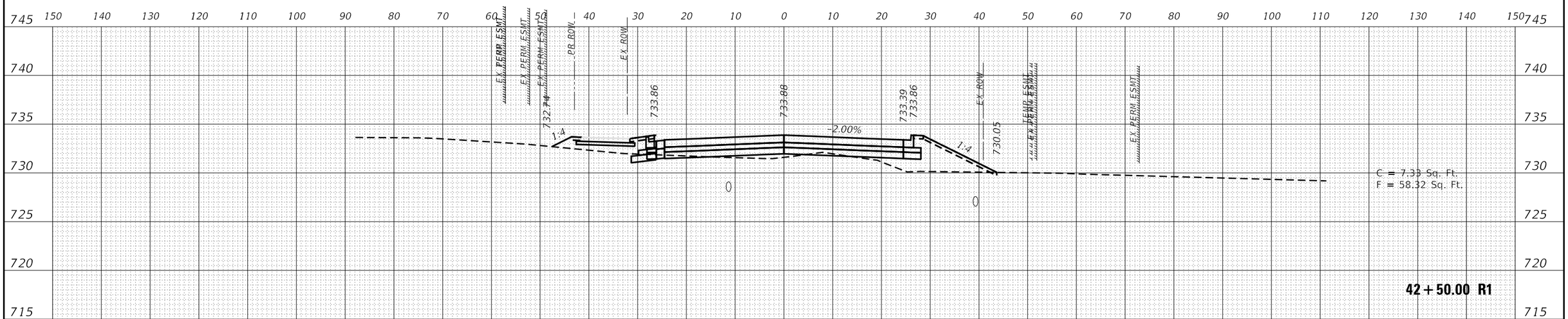

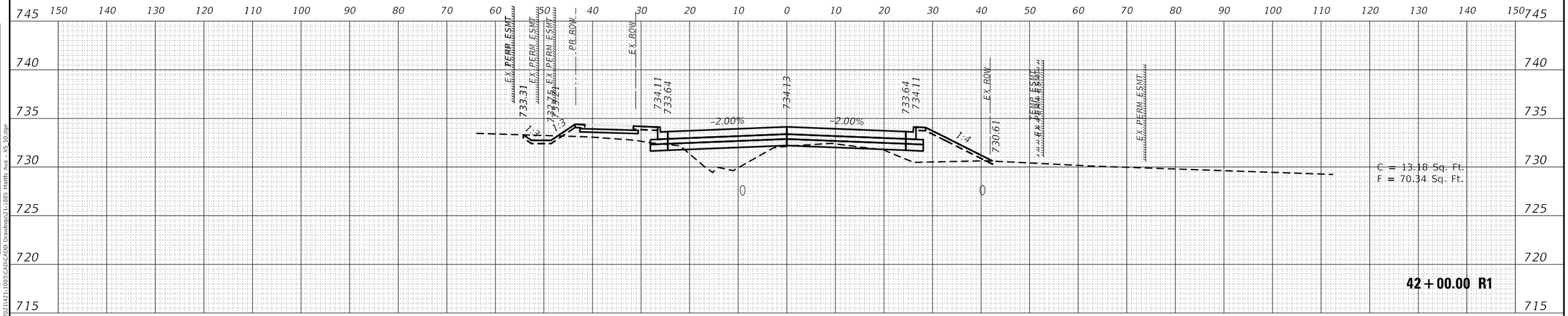

FINAL SURVEY	BY	DATE
SURVEYED		
PLOTTED		
TEMPLATE		
AREAS		
AREAS CHECKED		
NOTE BOOK NO.		

ORIGINAL SURVEY	BY	DATE
SURVEYED		
PLOTTED		
TEMPLATE		
AREAS		
AREAS CHECKED		
NOTE BOOK NO.		

MODEL: PR_MattisREV9_23_25
FILE NAME: X:\Production\Files\2021\421-1003\CADD Drawings\21-1885 Mattis Ave - XS 50.dgn

USER NAME = Nick.Burrus	DESIGNED -	REVISED -	
	DRAWN -	REVISED -	
PLOT SCALE = 20.0000 ' / in.	CHECKED -	REVISED -	
PLOT DATE = 10/1/2025	DATE -	REVISED -	

STATE OF ILLINOIS
DEPARTMENT OF TRANSPORTATION

MATTIS AVE.
CROSS SECTIONS

SCALE: | SHEET OF SHEETS | STA. 42+00.00 R1 TO STA. 42+50.00 R1

F.A. RTE.	SECTION	COUNTY	TOTAL SHEETS	SHEET NO.
7159	19-000314-00-PV	CHAMPAIGN	197	177

CONTRACT NO. 91642

ILLINOIS | FED. AID PROJECT

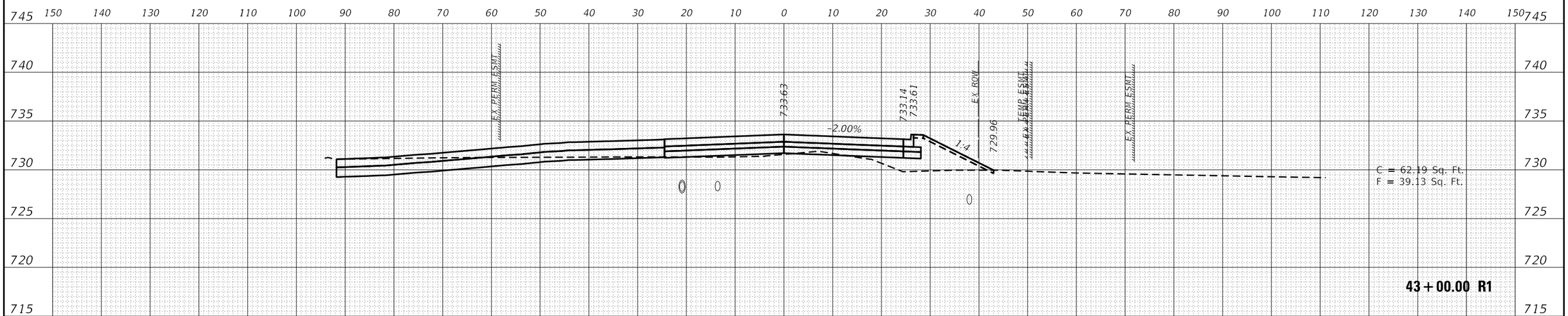

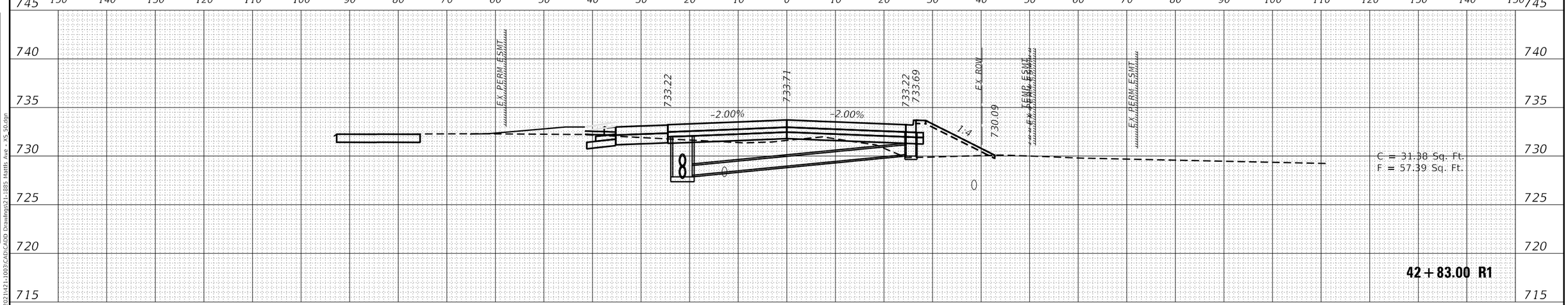

FINAL SURVEY	BY	DATE
SURVEYED		
PLOTTED		
TEMPLATE		
AREAS		
AREAS CHECKED		
NOTE BOOK NO.		

ORIGINAL SURVEY	BY	DATE
SURVEYED		
PLOTTED		
TEMPLATE		
AREAS		
AREAS CHECKED		
NOTE BOOK NO.		

MODEL: PB_MattisREV9_23_25
FILE NAME: X:\Production\Files\2021\21-1003\CADD Drawings\21-1885 Mattis Ave - XS 50.dgn

USER NAME = Nick.Burrus	DESIGNED -	REVISED -	
	DRAWN -	REVISED -	
PLOT SCALE = 20.0000 ' / in.	CHECKED -	REVISED -	
PLOT DATE = 10/1/2025	DATE -	REVISED -	

STATE OF ILLINOIS
DEPARTMENT OF TRANSPORTATION

MATTIS AVE.
CROSS SECTIONS

SCALE: | SHEET OF SHEETS | STA. 42+83.00 R1 TO STA. 43+00.00 R1

F.A. RTE.	SECTION	COUNTY	TOTAL SHEETS	SHEET NO.
7159	19-000314-00-PV	CHAMPAIGN	197	178
		CONTRACT NO. 91642		
		ILLINOIS	FED. AID PROJECT	

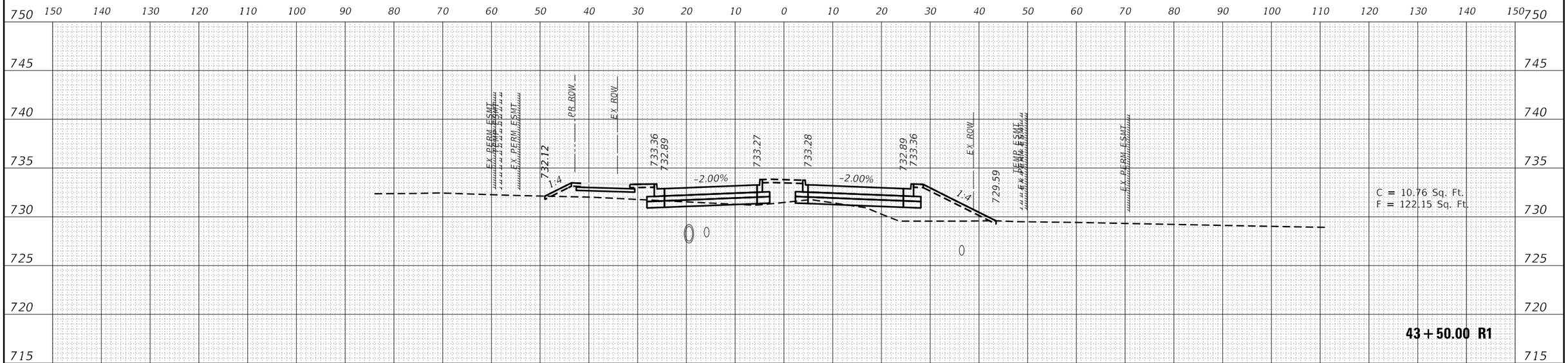

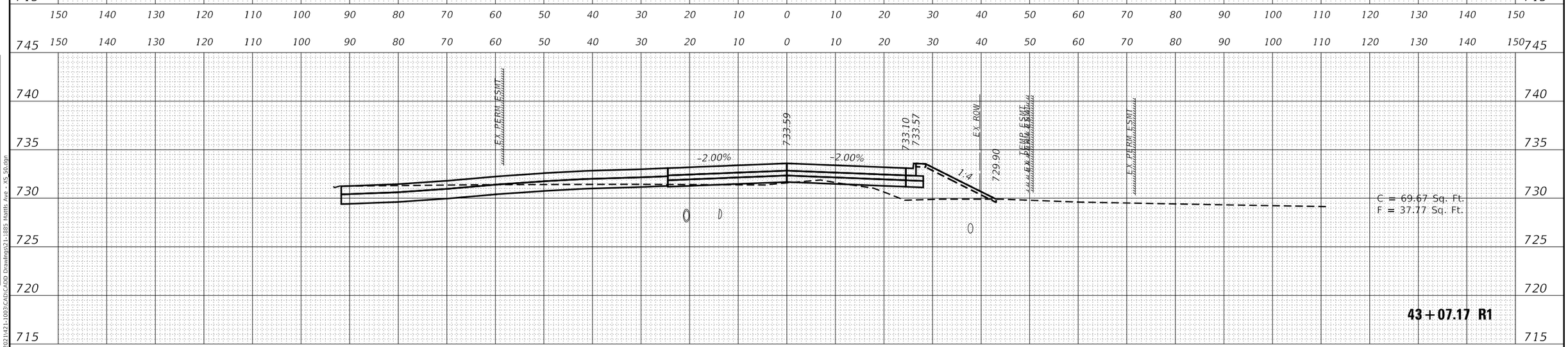

FINAL SURVEY	BY	DATE
SURVEYED		
PLOTTED		
TEMPLATE		
AREAS		
AREAS CHECKED		
NOTE BOOK NO.		

ORIGINAL SURVEY	BY	DATE
SURVEYED		
PLOTTED		
TEMPLATE		
AREAS		
AREAS CHECKED		
NOTE BOOK NO.		

MODEL: PR_MattisREV9_23_25
FILE NAME: X:\Production\Files\2021\421-1003\CADD Drawings\21-188S Mattis Ave - XS 50.dgn

USER NAME = Nick.Burrus	DESIGNED -	REVISED -	
	DRAWN -	REVISED -	
PLOT SCALE = 20.0000 ' / in.	CHECKED -	REVISED -	
PLOT DATE = 10/1/2025	DATE -	REVISED -	

STATE OF ILLINOIS
DEPARTMENT OF TRANSPORTATION

MATTIS AVE.
CROSS SECTIONS

SCALE: | SHEET OF SHEETS | STA. 43+07.17 R1 TO STA. 43+50.00 R1

F.A. RTE.	SECTION	COUNTY	TOTAL SHEETS	SHEET NO.
7159	19-000314-00-PV	CHAMPAIGN	197	179
		CONTRACT NO. 91642		
		ILLINOIS	FED. AID PROJECT	

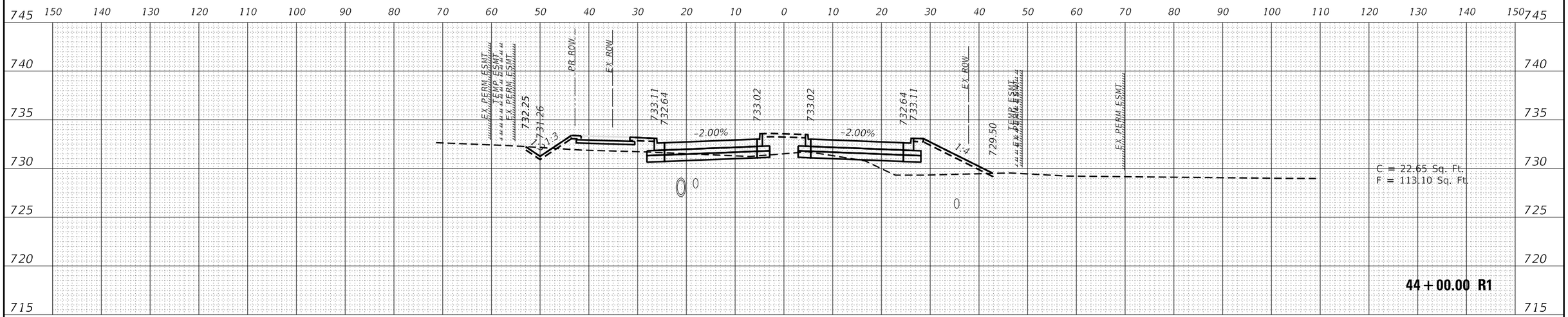

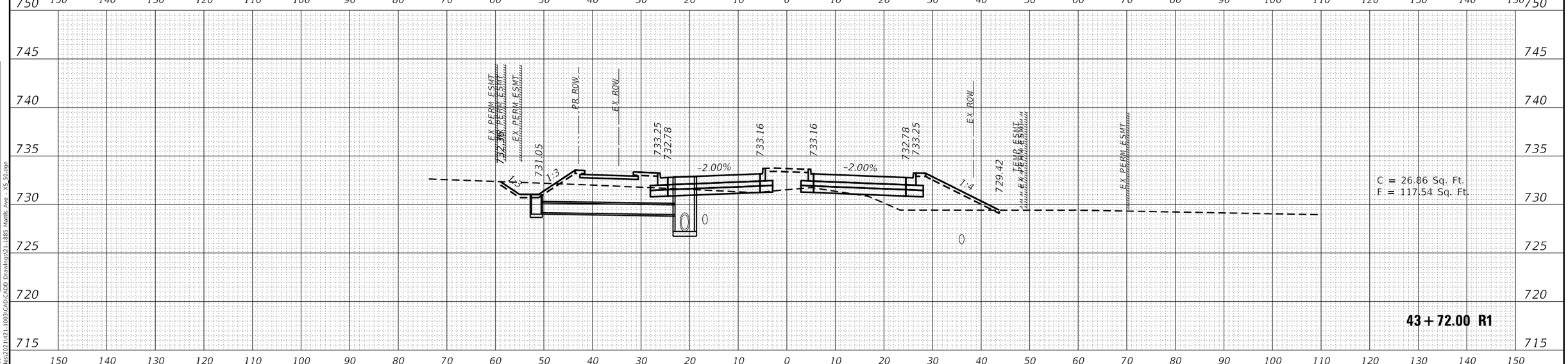

FINAL SURVEY	BY	DATE
SURVEYED		
PLOTTED		
TEMPLATE		
AREAS		
AREAS CHECKED		
NOTE BOOK NO.		

ORIGINAL SURVEY	BY	DATE
SURVEYED		
PLOTTED		
TEMPLATE		
AREAS		
AREAS CHECKED		
NOTE BOOK NO.		

MODEL: PR_MattisREV9_23_25
FILE NAME: X:\Production\Files\2021\21-1003\CADD Drawings\21-1885 Mattis Ave - XS 50.dgn

USER NAME = Nick.Burrus	DESIGNED -	REVISED -	
	DRAWN -	REVISED -	
PLOT SCALE = 20.0000 ' / in.	CHECKED -	REVISED -	
PLOT DATE = 10/1/2025	DATE -	REVISED -	

STATE OF ILLINOIS
DEPARTMENT OF TRANSPORTATION

MATTIS AVE.
CROSS SECTIONS

SCALE: | SHEET OF SHEETS | STA. 43+72.00 R1 TO STA. 44+00.00 R1

F.A. RTE.	SECTION	COUNTY	TOTAL SHEETS	SHEET NO.
7159	19-000314-00-PV	CHAMPAIGN	197	180
		CONTRACT NO. 91642		
		ILLINOIS	FED. AID PROJECT	

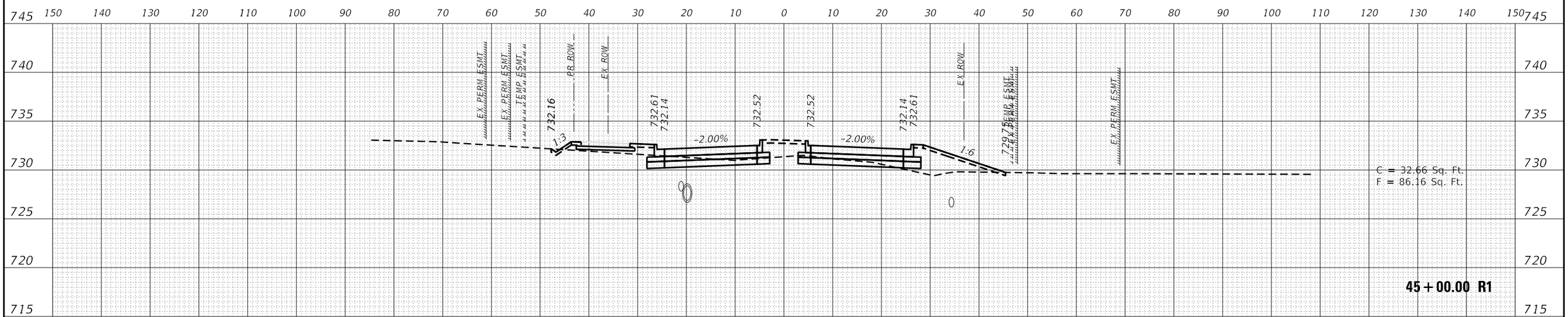

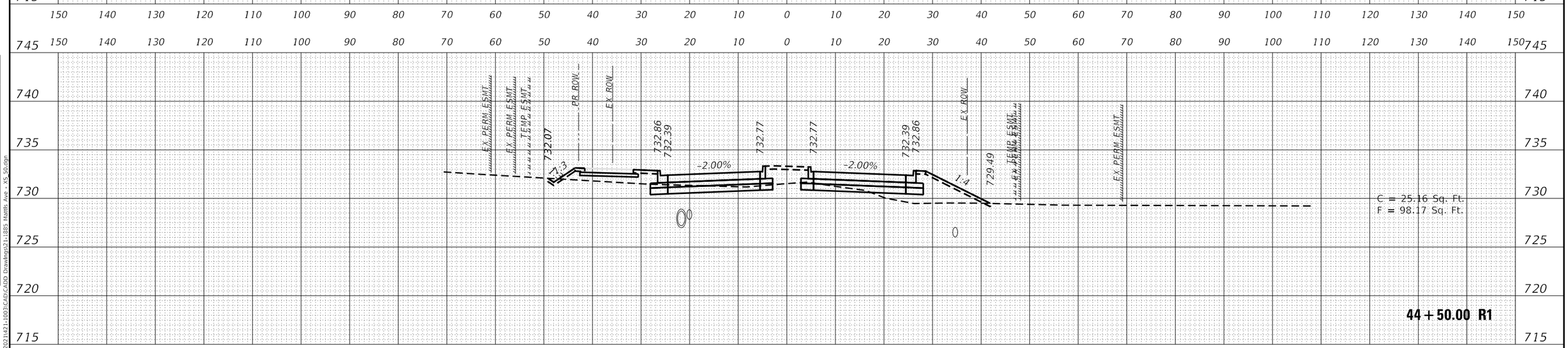

FINAL SURVEY	BY	DATE
SURVEYED		
PLOTTED		
TEMPLATE		
AREAS		
AREAS CHECKED		
NOTE BOOK NO.		

ORIGINAL SURVEY	BY	DATE
SURVEYED		
PLOTTED		
TEMPLATE		
AREAS		
AREAS CHECKED		
NOTE BOOK NO.		

MODEL: PR_MattisREV9_23_25
FILE NAME: X:\Production\Files\2021\21-1093\CADD Drawings\21-1885 Mattis Ave - XS 50.dgn

USER NAME = Nick.Burrus	DESIGNED -	REVISED -	
	DRAWN -	REVISED -	
PLOT SCALE = 20.0000 ' / in.	CHECKED -	REVISED -	
PLOT DATE = 10/1/2025	DATE -	REVISED -	

STATE OF ILLINOIS
DEPARTMENT OF TRANSPORTATION

MATTIS AVE.
CROSS SECTIONS

SCALE: | SHEET OF SHEETS | STA. 44+50.00 R1 TO STA. 45+00.00 R1

F.A. RTE.	SECTION	COUNTY	TOTAL SHEETS	SHEET NO.
7159	19-000314-00-PV	CHAMPAIGN	197	181
		CONTRACT NO. 91642		
		ILLINOIS	FED. AID PROJECT	

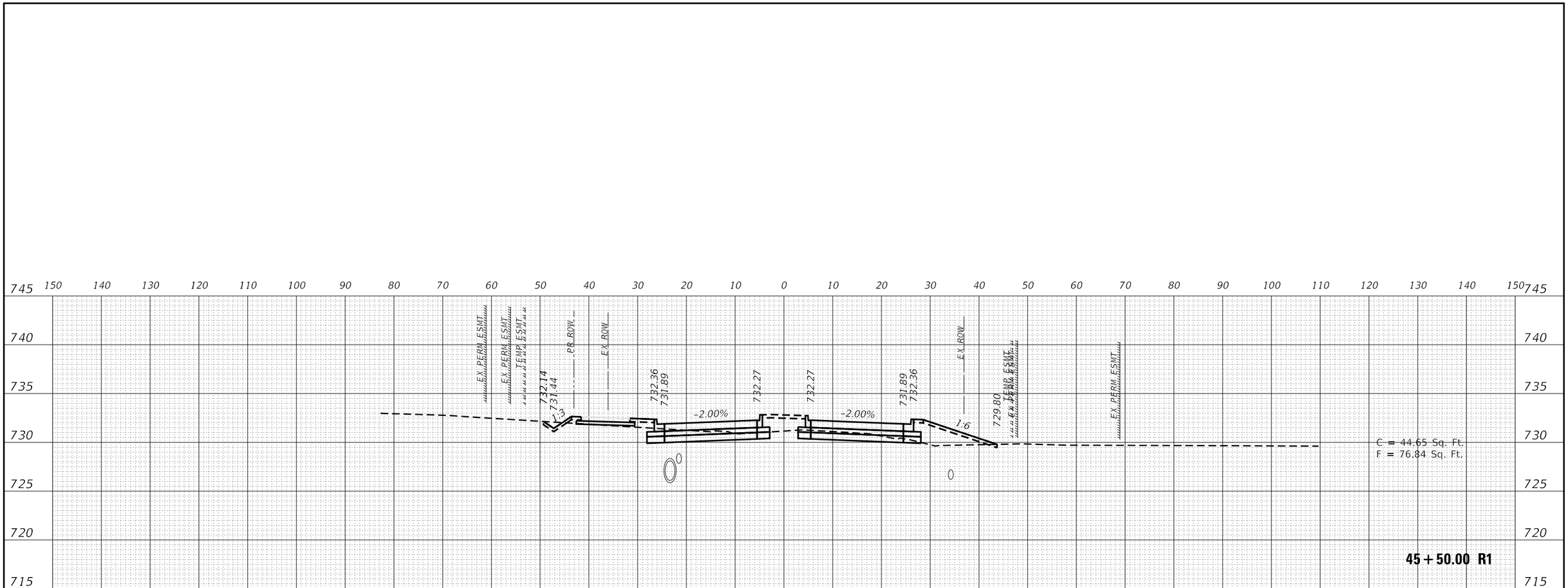

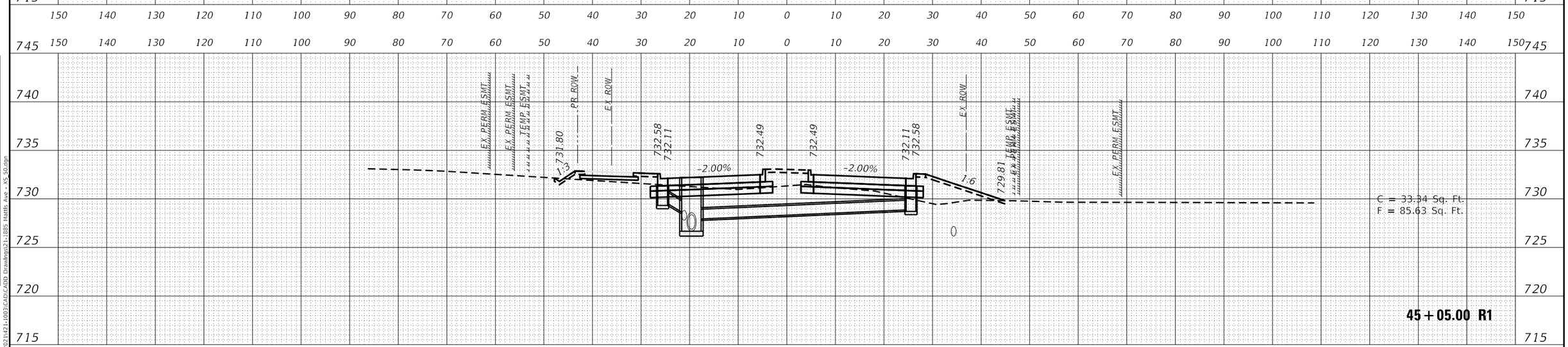

FINAL SURVEY		BY	DATE
NOTE BOOK	SURVEYED		
	PLOTTED		
	TEMPLATE		
	AREAS		
NO.	AREAS CHECKED		

ORIGINAL SURVEY		BY	DATE
NOTE BOOK	SURVEYED		
	PLOTTED		
	TEMPLATE		
	AREAS		
NO.	AREAS CHECKED		

MODEL: PR_MattisREV9_23_25
FILE NAME: X:\Production\Files\2021\21-1003\CADD Drawings\21-1885 Mattis Ave - XS 50.dgn

USER NAME = Nick.Burrus	DESIGNED -	REVISED -
	DRAWN -	REVISED -
PLOT SCALE = 20.0000 ' / in.	CHECKED -	REVISED -
PLOT DATE = 10/1/2025	DATE -	REVISED -

STATE OF ILLINOIS
DEPARTMENT OF TRANSPORTATION

MATTIS AVE.
CROSS SECTIONS

SCALE: | SHEET OF SHEETS | STA. 45+05.00 R1 TO STA. 45+50.00 R1

F.A. RTE.	SECTION	COUNTY	TOTAL SHEETS	SHEET NO.
7159	19-000314-00-PV	CHAMPAIGN	197	182
		CONTRACT NO. 91642		
		ILLINOIS	FED. AID PROJECT	

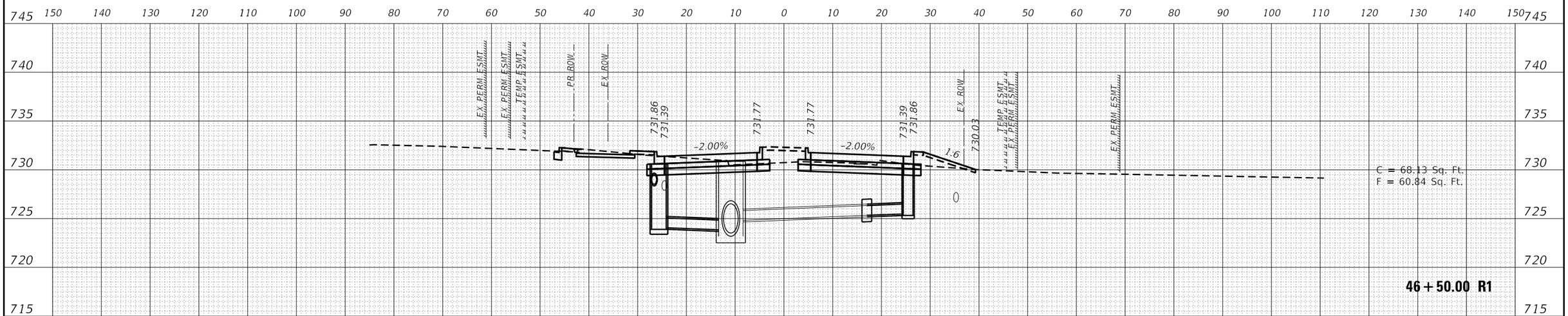

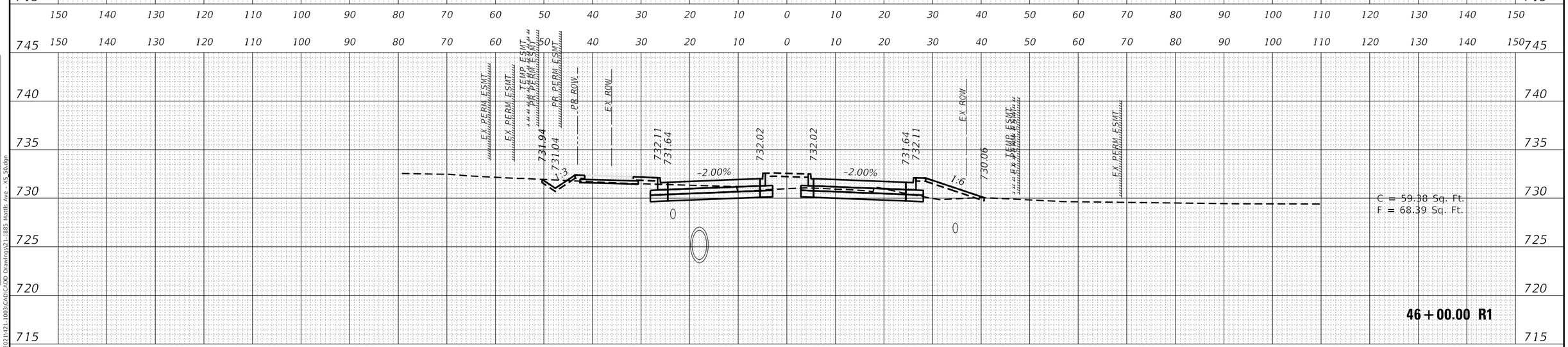

USER NAME = Nick.Burrus	DESIGNED -	REVISED -	
	DRAWN -	REVISED -	
PLOT SCALE = 20.0000 ' / in.	CHECKED -	REVISED -	
PLOT DATE = 10/1/2025	DATE -	REVISED -	

STATE OF ILLINOIS
DEPARTMENT OF TRANSPORTATION

MATTIS AVE.
CROSS SECTIONS

SCALE: | SHEET OF SHEETS | STA. 46+00.00 R1 TO STA. 46+50.00 R1

F.A. RTE.	SECTION	COUNTY	TOTAL SHEETS	SHEET NO.
7159	19-000314-00-PV	CHAMPAIGN	197	183
		CONTRACT NO. 91642		
		ILLINOIS	FED. AID PROJECT	

FINAL SURVEY — NOTE BOOK NO. — SURVEYED — PLOTTED — TEMPLATE — AREAS — AREAS CHECKED — BY — DATE

ORIGINAL SURVEY — NOTE BOOK NO. — SURVEYED — PLOTTED — TEMPLATE — AREAS — AREAS CHECKED — BY — DATE

MODEL: PR_MattisREV9_23_25
FILE NAME: X:\Production\Files\2021\421-1003\CADD Drawings\21-1885 Mattis Ave - XS 50.dgn

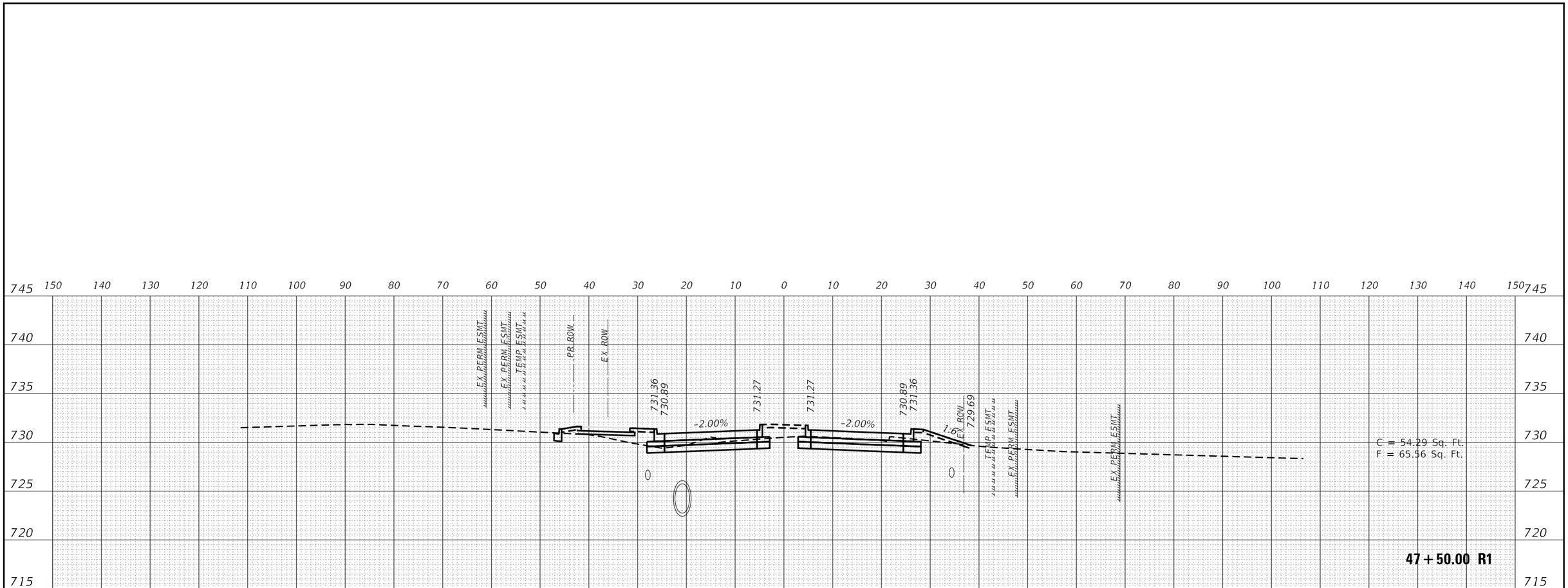

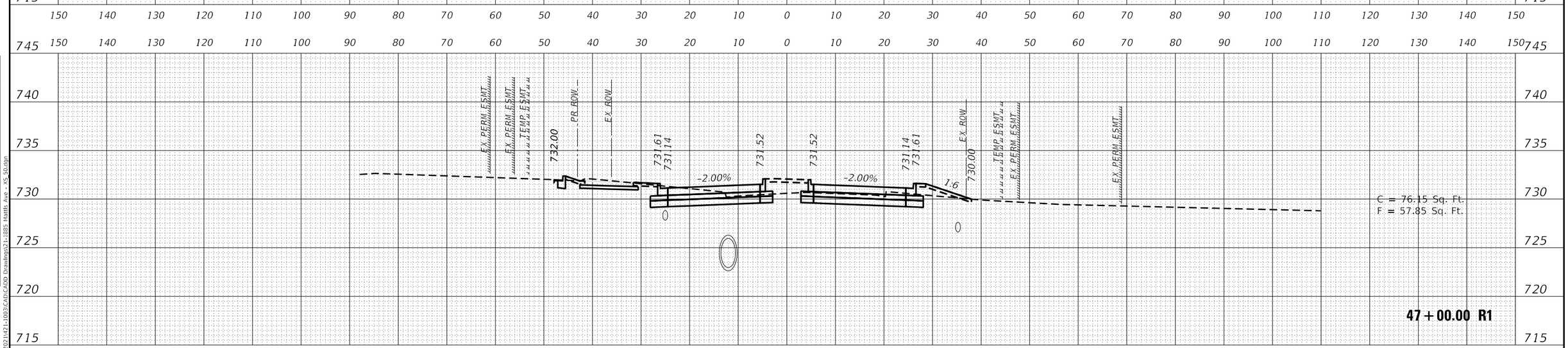

FINAL SURVEY		BY	DATE
NOTE BOOK	SURVEYED		
	PLOTTED		
	TEMPLATE		
	AREAS		
	AREAS CHECKED		
NO.			

ORIGINAL SURVEY		BY	DATE
NOTE BOOK	SURVEYED		
	PLOTTED		
	TEMPLATE		
	AREAS		
	AREAS CHECKED		
NO.			

MODEL: PR_MattisREV9_23_25
FILE NAME: X:\Production\Files\2021\21-1093\CADD Drawings\21-1885 Mattis Ave - XS 50.dgn

USER NAME = Nick.Burrus	DESIGNED -	REVISED -
	DRAWN -	REVISED -
PLOT SCALE = 20.0000 ' / in.	CHECKED -	REVISED -
PLOT DATE = 10/1/2025	DATE -	REVISED -

STATE OF ILLINOIS
DEPARTMENT OF TRANSPORTATION

MATTIS AVE.
CROSS SECTIONS

SCALE: | SHEET OF SHEETS | STA. 47+00.00 R1 TO STA. 47+50.00 R1

F.A. RTE.	SECTION	COUNTY	TOTAL SHEETS	SHEET NO.
7159	19-000314-00-PV	CHAMPAIGN	197	184
		CONTRACT NO. 91642		
		ILLINOIS	FED. AID PROJECT	

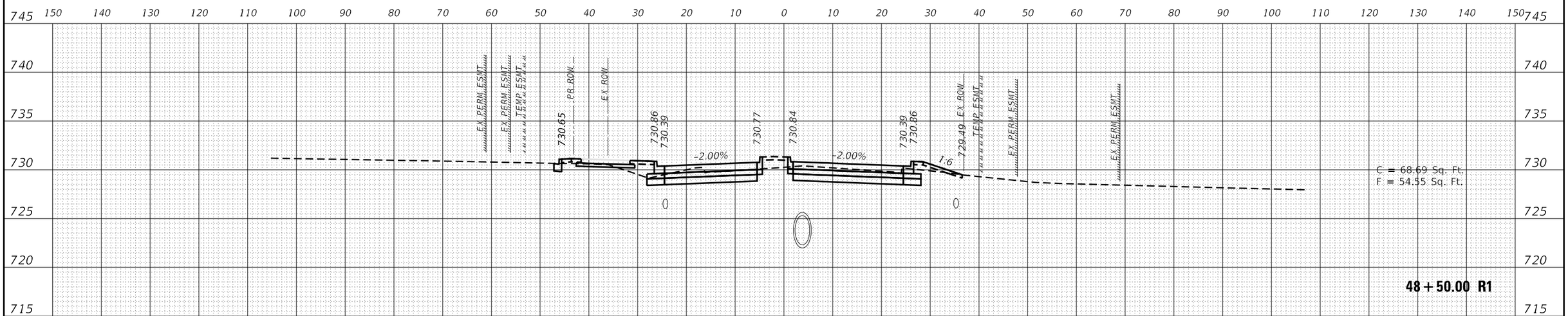

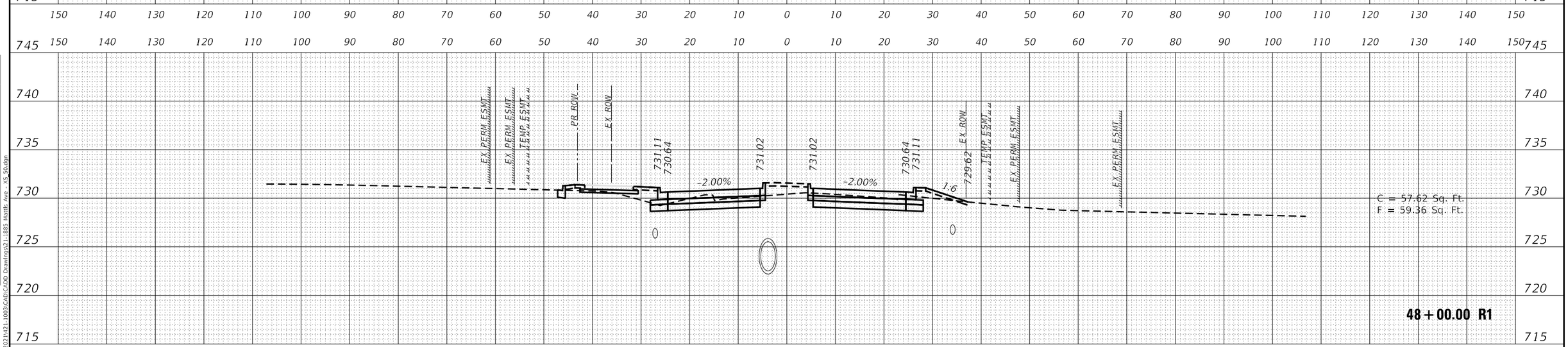

USER NAME = Nick.Burrus	DESIGNED -	REVISED -	
	DRAWN -	REVISED -	
PLOT SCALE = 20.0000 ' / in.	CHECKED -	REVISED -	
PLOT DATE = 10/1/2025	DATE -	REVISED -	

STATE OF ILLINOIS
DEPARTMENT OF TRANSPORTATION

MATTIS AVE.
CROSS SECTIONS

SCALE: | SHEET OF SHEETS | STA. 48+00.00 R1 TO STA. 48+50.00 R1

F.A. RTE.	SECTION	COUNTY	TOTAL SHEETS	SHEET NO.
7159	19-000314-00-PV	CHAMPAIGN	197	185
		CONTRACT NO. 91642		
		ILLINOIS	FED. AID PROJECT	

FINAL SURVEY — NOTE BOOK NO. — SURVEYED — PLOTTED — TEMPLATE — AREAS — AREAS CHECKED — BY — DATE

ORIGINAL SURVEY — NOTE BOOK NO. — SURVEYED — PLOTTED — TEMPLATE — AREAS — AREAS CHECKED — BY — DATE

MODEL: PR_MattisREV9_23_25
FILE NAME: X:\Production\Files\2021\21-1093\CADD Drawings\21-1885 Mattis Ave - XS 50.dgn

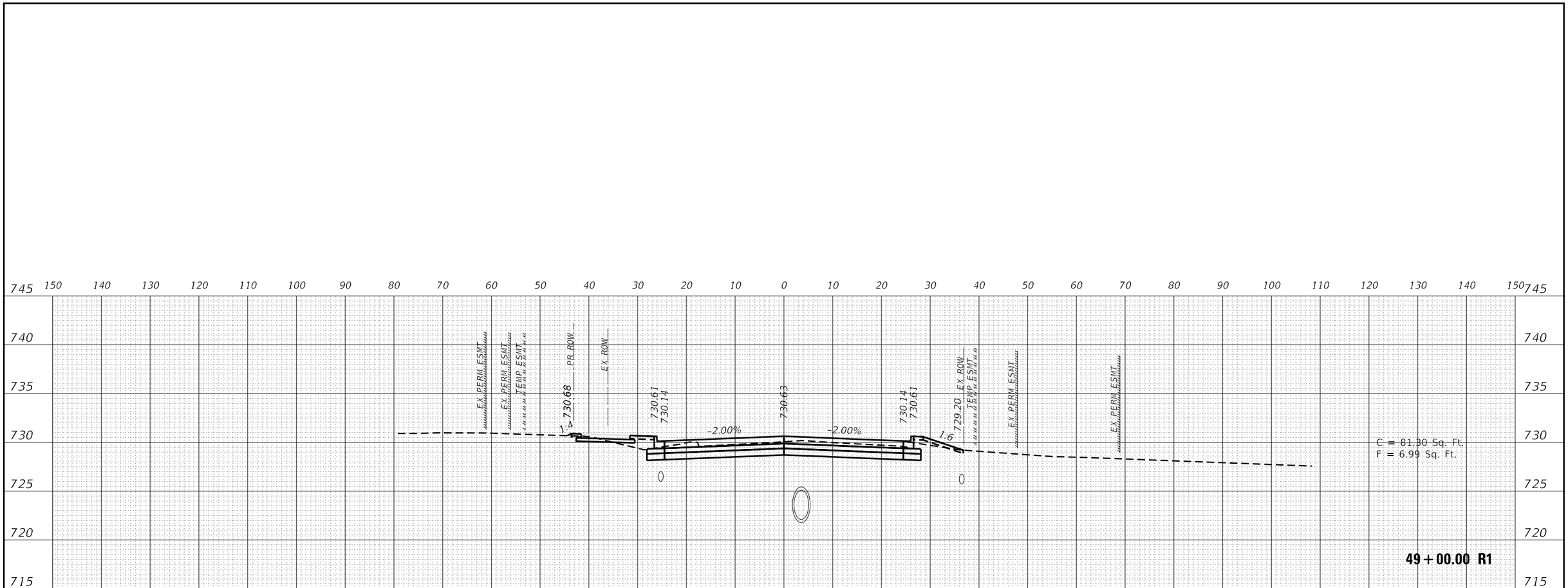

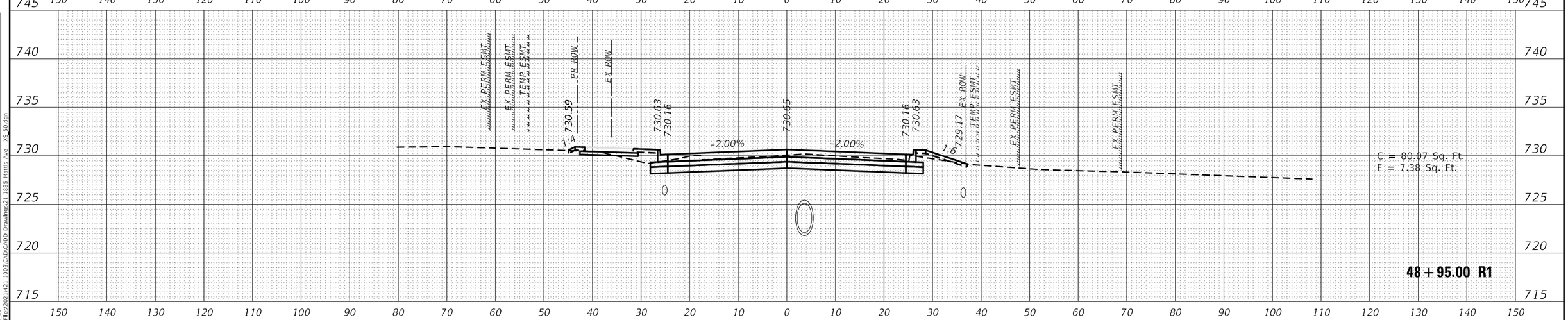

USER NAME = Nick.Burrus	DESIGNED -	REVISED -	
	DRAWN -	REVISED -	
PLOT SCALE = 20.0000 ' / in.	CHECKED -	REVISED -	
PLOT DATE = 10/1/2025	DATE -	REVISED -	

STATE OF ILLINOIS
DEPARTMENT OF TRANSPORTATION

MATTIS AVE.
CROSS SECTIONS

SCALE: | SHEET OF SHEETS | STA. 48+95.00 R1 TO STA. 49+00.00 R1

F.A. RTE.	SECTION	COUNTY	TOTAL SHEETS	SHEET NO.
7159	19-000314-00-PV	CHAMPAIGN	197	186
		CONTRACT NO. 91642		
		ILLINOIS	FED. AID PROJECT	

FINAL SURVEY — NOTE BOOK NO. — SURVEYED — PLOTTED — TEMPLATE — AREAS — AREAS CHECKED — BY — DATE

ORIGINAL SURVEY — NOTE BOOK NO. — SURVEYED — PLOTTED — TEMPLATE — AREAS — AREAS CHECKED — BY — DATE

MODEL: PR_MattisREV9_23_25
FILE NAME: X:\Production\Files\2021\421-1003\CADD Drawings\21-1885 Mattis Ave - XS 50.dgn

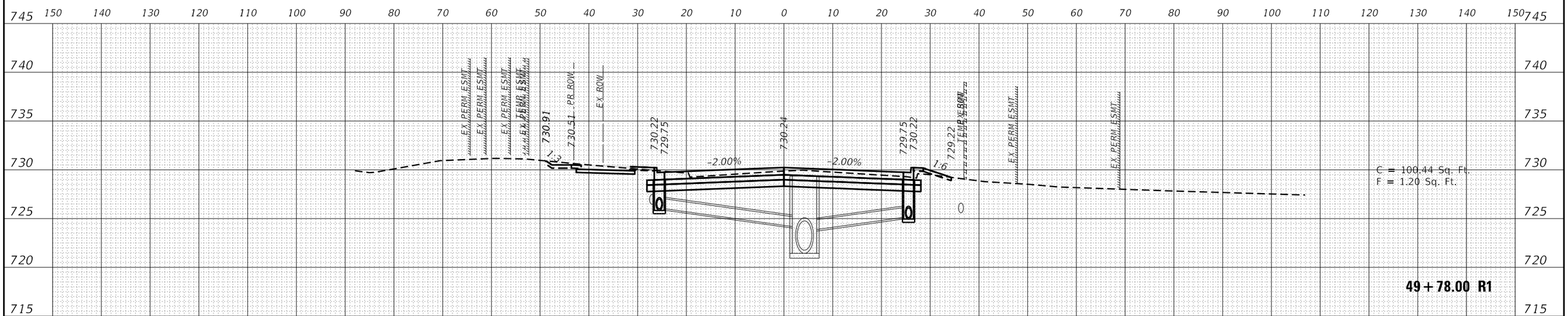

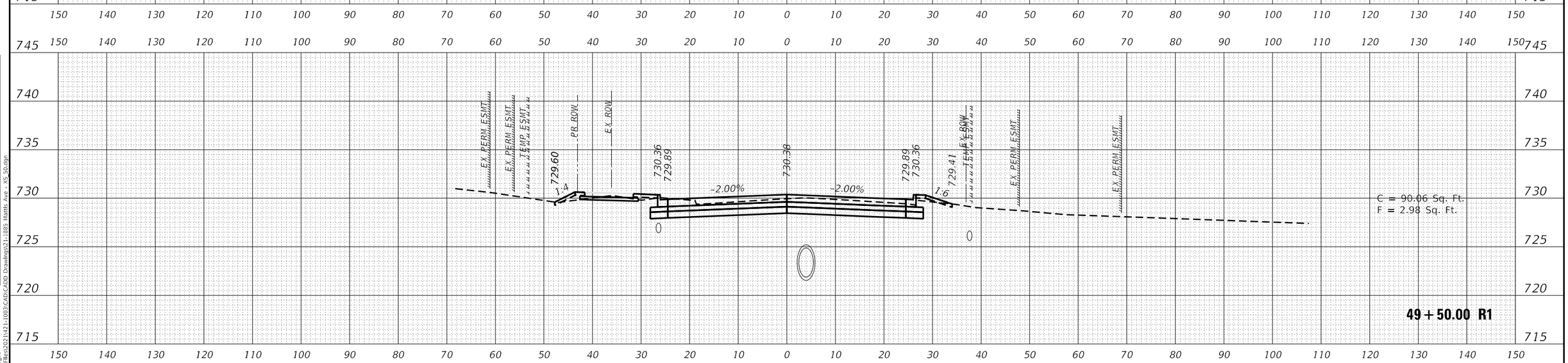

USER NAME = Nick.Burrus	DESIGNED -	REVISED -	
	DRAWN -	REVISED -	
PLOT SCALE = 20.0000 ' / in.	CHECKED -	REVISED -	
PLOT DATE = 10/1/2025	DATE -	REVISED -	

STATE OF ILLINOIS
DEPARTMENT OF TRANSPORTATION

MATTIS AVE.
CROSS SECTIONS

SCALE: | SHEET OF SHEETS | STA. 49+50.00 R1 TO STA. 49+78.00 R1

F.A. RTE.	SECTION	COUNTY	TOTAL SHEETS	SHEET NO.
7159	19-000314-00-PV	CHAMPAIGN	197	187
		CONTRACT NO. 91642		
		ILLINOIS	FED. AID PROJECT	

FINAL SURVEY — NOTE BOOK NO. — SURVEYED — PLOTTED — TEMPLATE — AREAS — AREAS CHECKED — BY — DATE

ORIGINAL SURVEY — NOTE BOOK NO. — SURVEYED — PLOTTED — TEMPLATE — AREAS — AREAS CHECKED — BY — DATE

MODEL: PR_MattisREV9_23_25
FILE NAME: X:\Production\Files\2021\421-1003\CADD Drawings\21-1885 Mattis Ave - XS 50.dgn

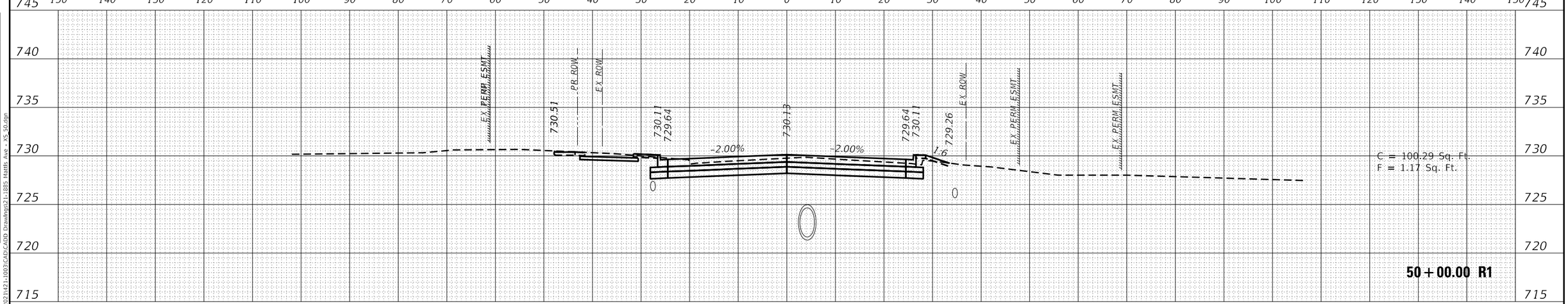

FINAL SURVEY		BY	DATE
NOTE BOOK	SURVEYED		
	PLOTTED		
	TEMPLATE		
	AREAS		
	AREAS CHECKED		
NO.			

ORIGINAL SURVEY		BY	DATE
NOTE BOOK	SURVEYED		
	PLOTTED		
	TEMPLATE		
	AREAS		
	AREAS CHECKED		
NO.			

MODEL: PR_MattisREV9_23_25
FILE NAME: X:\Production\Files\2021\421-1003\CADD Drawings\21-188S Mattis Ave - XS 50.dgn

USER NAME = Nick.Burrus	DESIGNED -	REVISED -	
	DRAWN -	REVISED -	
PLOT SCALE = 20.0000 ' / in.	CHECKED -	REVISED -	
PLOT DATE = 10/1/2025	DATE -	REVISED -	

STATE OF ILLINOIS
DEPARTMENT OF TRANSPORTATION

MATTIS AVE.
CROSS SECTIONS

SCALE: | SHEET OF SHEETS | STA. 50+00.00 R1 TO STA. 50+33.52 R1

F.A. RTE.	SECTION	COUNTY	TOTAL SHEETS	SHEET NO.
7159	19-000314-00-PV	CHAMPAIGN	197	188
		CONTRACT NO. 91642		
		ILLINOIS	FED. AID PROJECT	

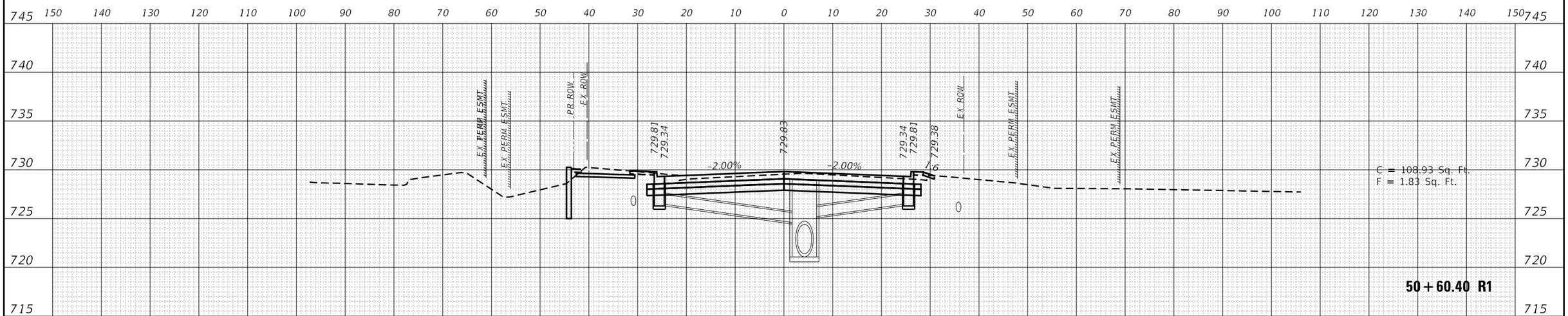

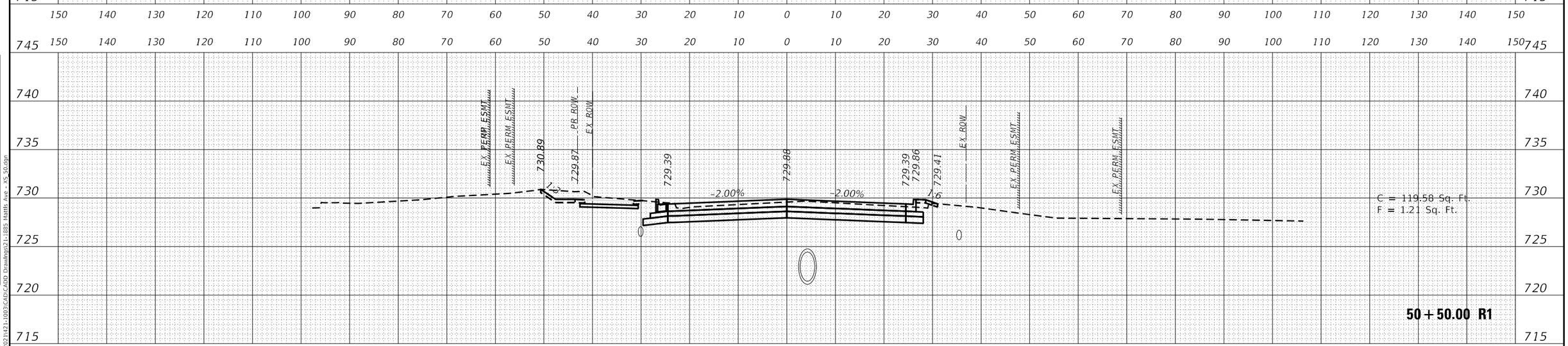

USER NAME = Nick.Burrus	DESIGNED -	REVISED -	
	DRAWN -	REVISED -	
PLOT SCALE = 20.0000 ' / in.	CHECKED -	REVISED -	
PLOT DATE = 10/1/2025	DATE -	REVISED -	

STATE OF ILLINOIS
DEPARTMENT OF TRANSPORTATION

MATTIS AVE.
CROSS SECTIONS

SCALE: | SHEET OF SHEETS | STA. 50+50.00 R1 TO STA. 50+60.40 R1

F.A. RTE.	SECTION	COUNTY	TOTAL SHEETS	SHEET NO.
7159	19-000314-00-PV	CHAMPAIGN	197	189
		CONTRACT NO. 91642		
		ILLINOIS	FED. AID PROJECT	

FINAL SURVEY — NOTE BOOK NO. — SURVEYED — PLOTTED — TEMPLATE — AREAS — AREAS CHECKED — BY — DATE

ORIGINAL SURVEY — NOTE BOOK NO. — SURVEYED — PLOTTED — TEMPLATE — AREAS — AREAS CHECKED — BY — DATE

MODEL: PR_MattisREV9_23_25
FILE NAME: X:\Production\Files\2021\21-1003\CADD Drawings\21-1885 Mattis Ave - XS 50.dgn

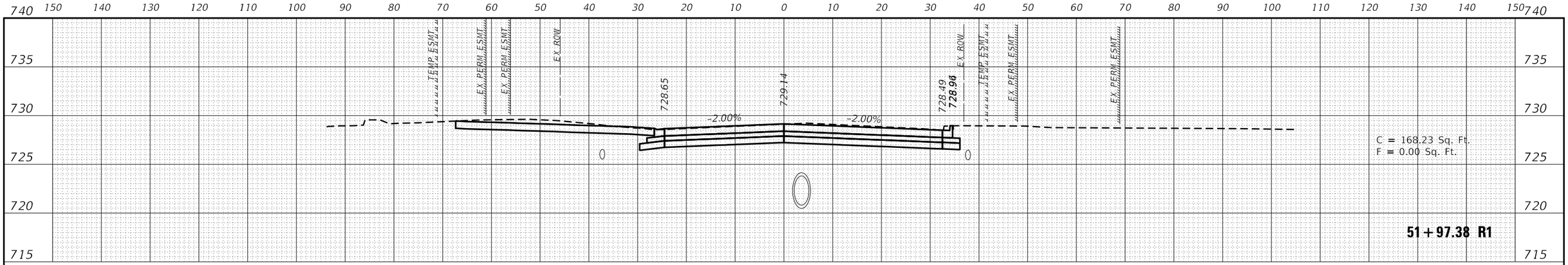

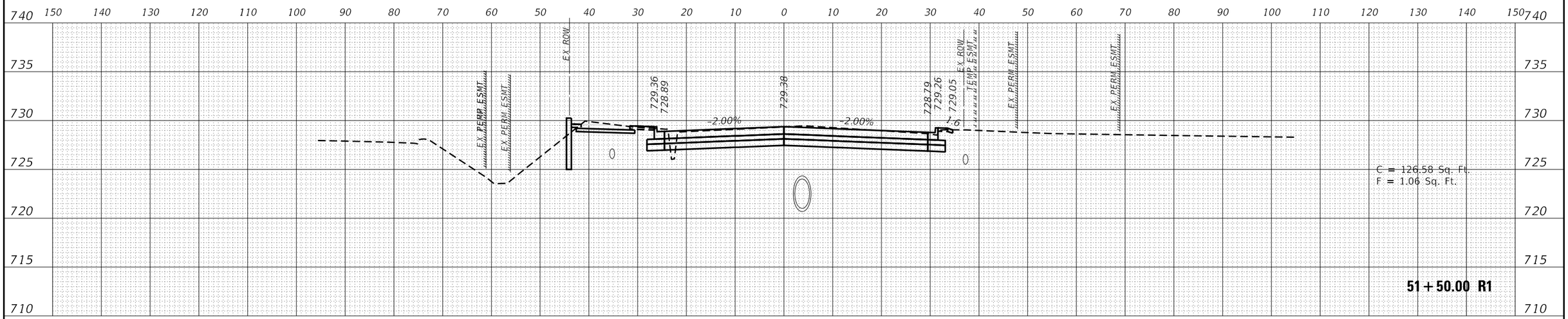

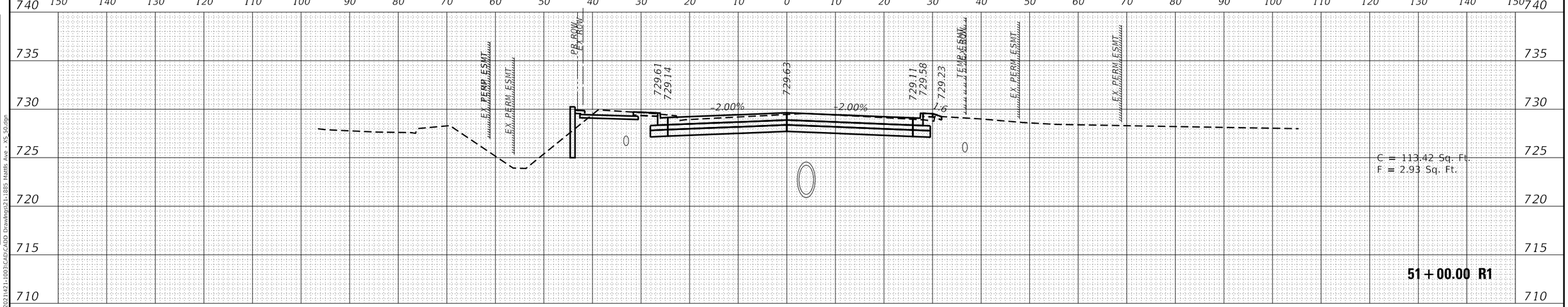

FINAL SURVEY		BY	DATE
NOTE BOOK	SURVEYED		
	PLOTTED		
	TEMPLATE		
	AREAS		
NO.	AREAS CHECKED		

ORIGINAL SURVEY		BY	DATE
NOTE BOOK	SURVEYED		
	PLOTTED		
	TEMPLATE		
	AREAS		
NO.	AREAS CHECKED		

MODEL: PR_MattisREV9_23_25
FILE NAME: X:\Production\Files\2021\21-1003\CADD Drawings\21-1885 Mattis Ave - XS 50.dgn

USER NAME = Nick.Burrus	DESIGNED -	REVISED -	
	DRAWN -	REVISED -	
PLOT SCALE = 20.0000 ' / in.	CHECKED -	REVISED -	
PLOT DATE = 10/1/2025	DATE -	REVISED -	

STATE OF ILLINOIS
DEPARTMENT OF TRANSPORTATION

MATTIS AVE.
CROSS SECTIONS

SCALE: | SHEET OF SHEETS | STA. 51+00.00 R1 TO STA. 51+97.38 R1

F.A. RTE.	SECTION	COUNTY	TOTAL SHEETS	SHEET NO.
7159	19-000314-00-PV	CHAMPAIGN	197	190
		CONTRACT NO. 91642		
		ILLINOIS	FED. AID PROJECT	

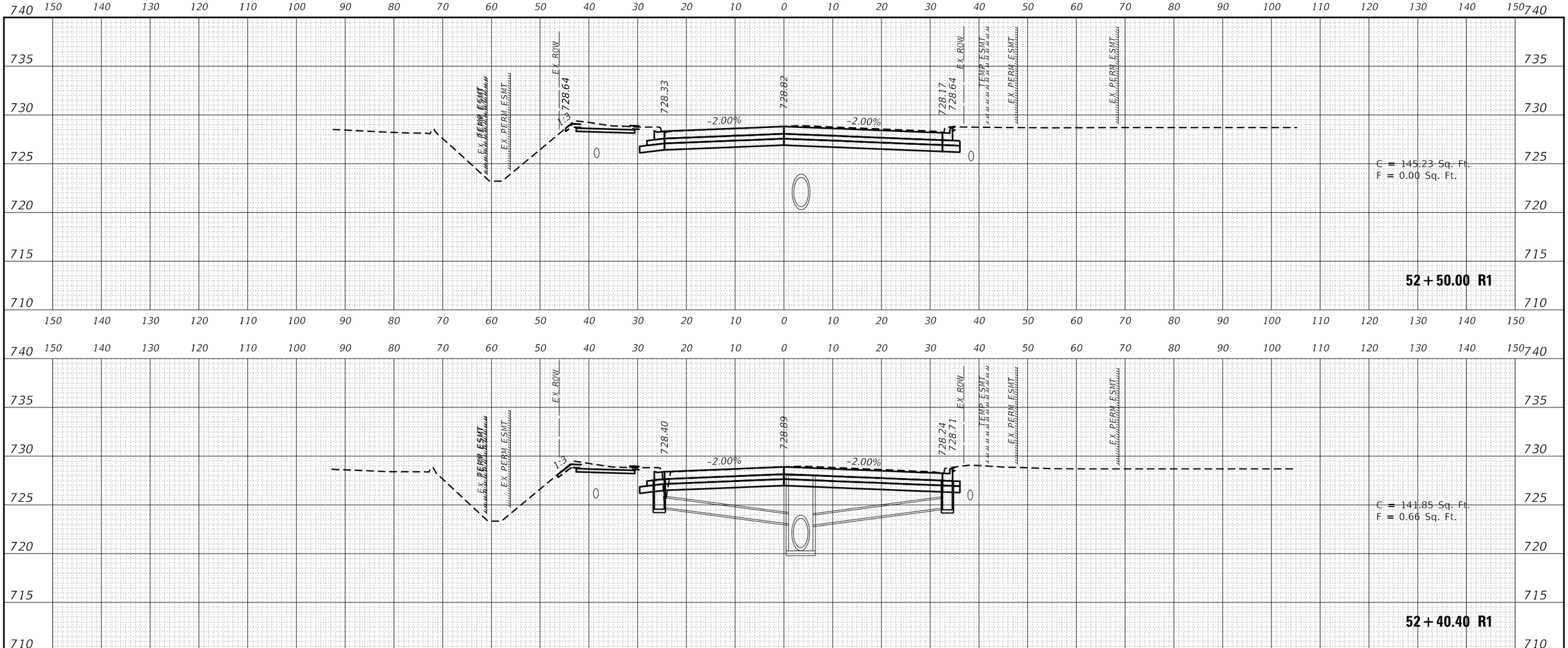

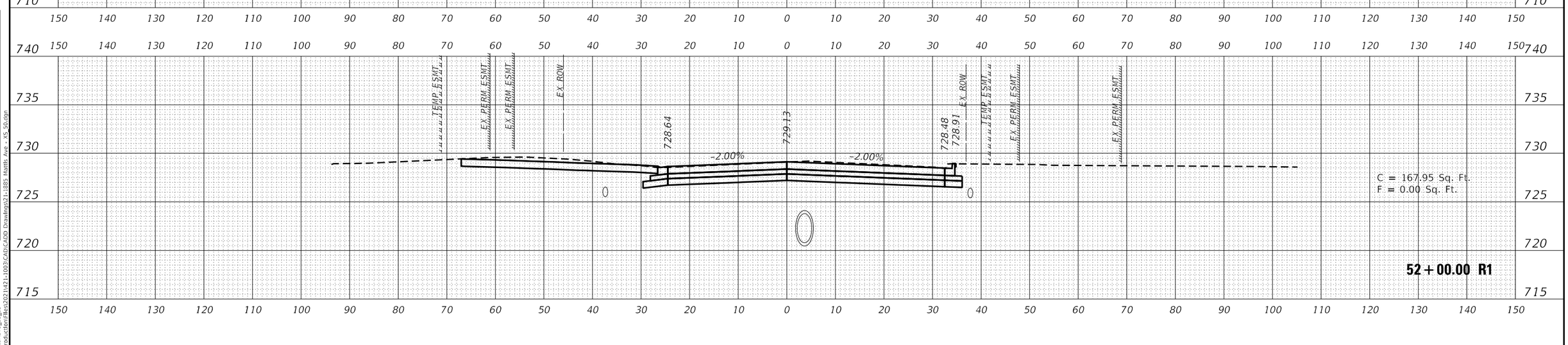

FINAL SURVEY	BY	DATE
SURVEYED		
PLOTTED		
TEMPLATE		
AREAS		
AREAS CHECKED		
NOTE BOOK NO.		

ORIGINAL SURVEY	BY	DATE
SURVEYED		
PLOTTED		
TEMPLATE		
AREAS		
AREAS CHECKED		
NOTE BOOK NO.		

MODEL: PR_MattisREV9_23_25
FILE NAME: X:\Production\Files\2021\421-1003\CAD\CADD Drawings\21-188S Mattis Ave - XS 50.dgn

USER NAME = Nick.Burrus	DESIGNED -	REVISED -	
	DRAWN -	REVISED -	
PLOT SCALE = 20.0000 ' / in.	CHECKED -	REVISED -	
PLOT DATE = 10/1/2025	DATE -	REVISED -	

STATE OF ILLINOIS
DEPARTMENT OF TRANSPORTATION

MATTIS AVE.
CROSS SECTIONS

SCALE: | SHEET OF SHEETS | STA. 52+00.00 R1 TO STA. 52+50.00 R1

F.A. RTE.	SECTION	COUNTY	TOTAL SHEETS	SHEET NO.
7159	19-000314-00-PV	CHAMPAIGN	197	191
		CONTRACT NO. 91642		
		ILLINOIS	FED. AID PROJECT	

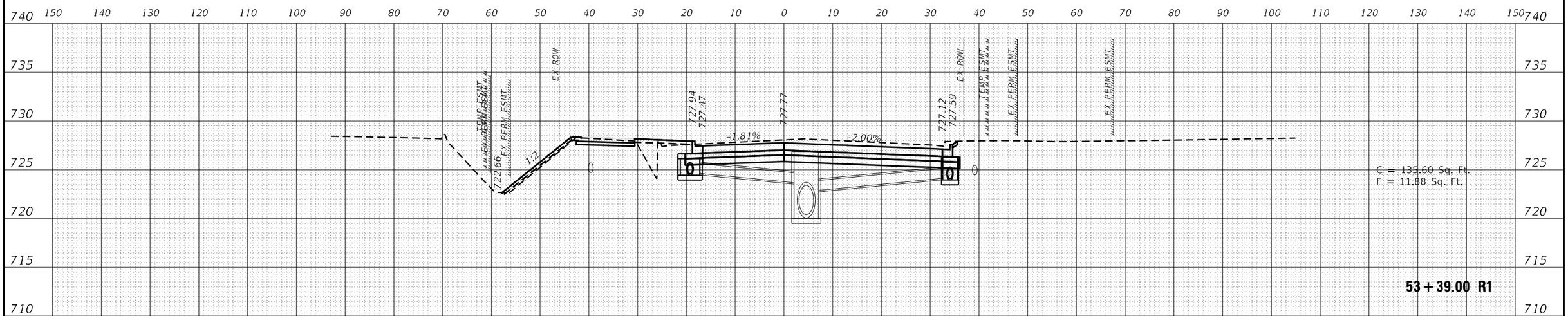

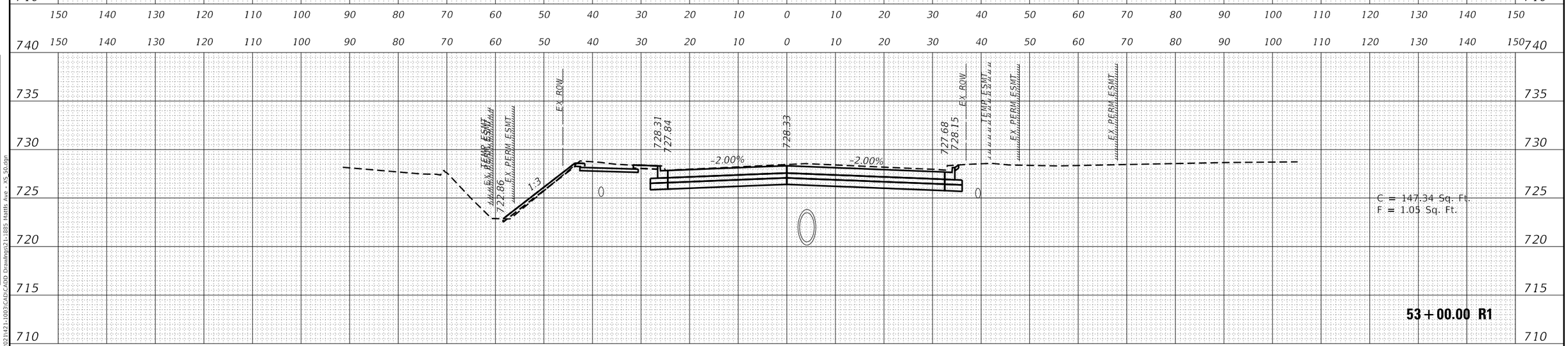

FINAL SURVEY		BY	DATE
NOTE BOOK	SURVEYED		
	PLOTTED		
	TEMPLATE		
	AREAS		
	AREAS CHECKED		
NO.			

ORIGINAL SURVEY		BY	DATE
NOTE BOOK	SURVEYED		
	PLOTTED		
	TEMPLATE		
	AREAS		
	AREAS CHECKED		
NO.			

MODEL: PB_MattisREV9_23_25
FILE NAME: X:\Production\Files\2021\21-1003\CADD Drawings\21-1885 Mattis Ave - XS 50.dgn

USER NAME = Nick.Burrus	DESIGNED -	REVISED -
	DRAWN -	REVISED -
PLOT SCALE = 20.0000 ' / in.	CHECKED -	REVISED -
PLOT DATE = 10/1/2025	DATE -	REVISED -

STATE OF ILLINOIS
DEPARTMENT OF TRANSPORTATION

MATTIS AVE.
CROSS SECTIONS

SCALE: | SHEET OF SHEETS | STA. 53+00.00 R1 TO STA. 53+39.00 R1

F.A. RTE.	SECTION	COUNTY	TOTAL SHEETS	SHEET NO.
7159	19-000314-00-PV	CHAMPAIGN	197	192
		CONTRACT NO. 91642		
		ILLINOIS	FED. AID PROJECT	

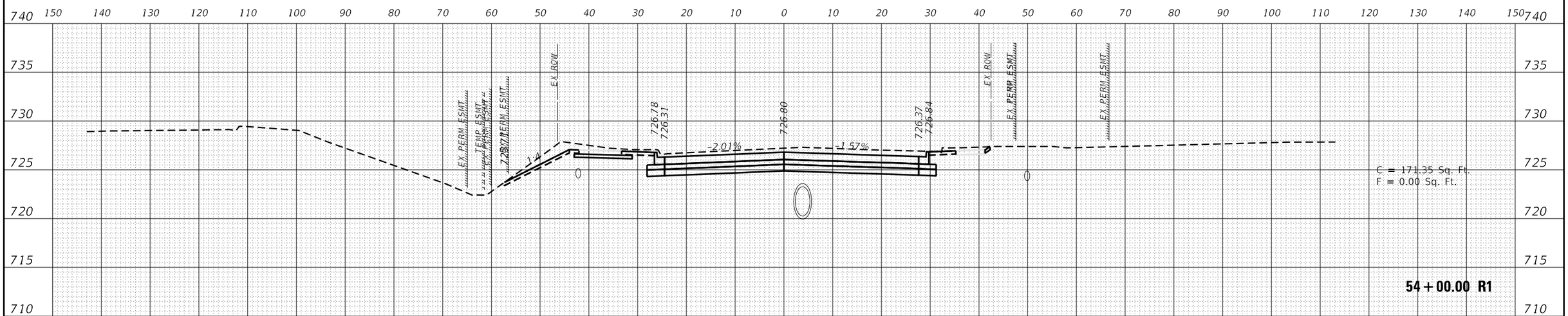

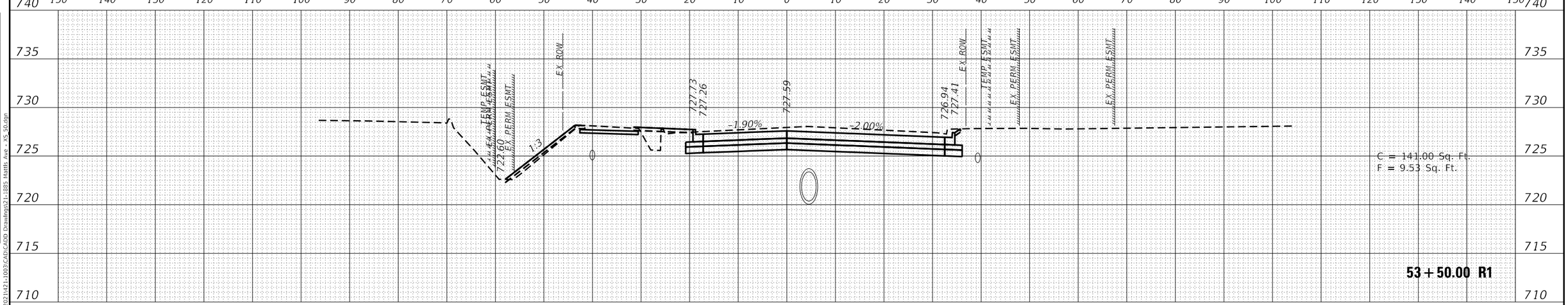

FINAL SURVEY	BY	DATE
SURVEYED		
PLOTTED		
TEMPLATE		
AREAS		
AREAS CHECKED		
NOTE BOOK NO.		

ORIGINAL SURVEY	BY	DATE
SURVEYED		
PLOTTED		
TEMPLATE		
AREAS		
AREAS CHECKED		
NOTE BOOK NO.		

MODEL: PB_MattisREV9_23_25
FILE NAME: X:\Production\Files\2021\421-1003\CADD Drawings\21-188S Mattis Ave - XS 50.dgn

USER NAME = Nick.Burrus	DESIGNED -	REVISED -
	DRAWN -	REVISED -
PLOT SCALE = 20.0000 ' / in.	CHECKED -	REVISED -
PLOT DATE = 10/1/2025	DATE -	REVISED -

STATE OF ILLINOIS
DEPARTMENT OF TRANSPORTATION

MATTIS AVE.
CROSS SECTIONS

SCALE: | SHEET OF SHEETS | STA. 53+50.00 R1 TO STA. 54+00.00 R1

F.A. RTE.	SECTION	COUNTY	TOTAL SHEETS	SHEET NO.
7159	19-000314-00-PV	CHAMPAIGN	197	193
		CONTRACT NO. 91642		
		ILLINOIS	FED. AID PROJECT	

FINAL SURVEY		BY	DATE
NOTE BOOK	SURVEYED		
	PLOTTED		
	TEMPLATE		
	AREAS		
NO.	AREAS CHECKED		

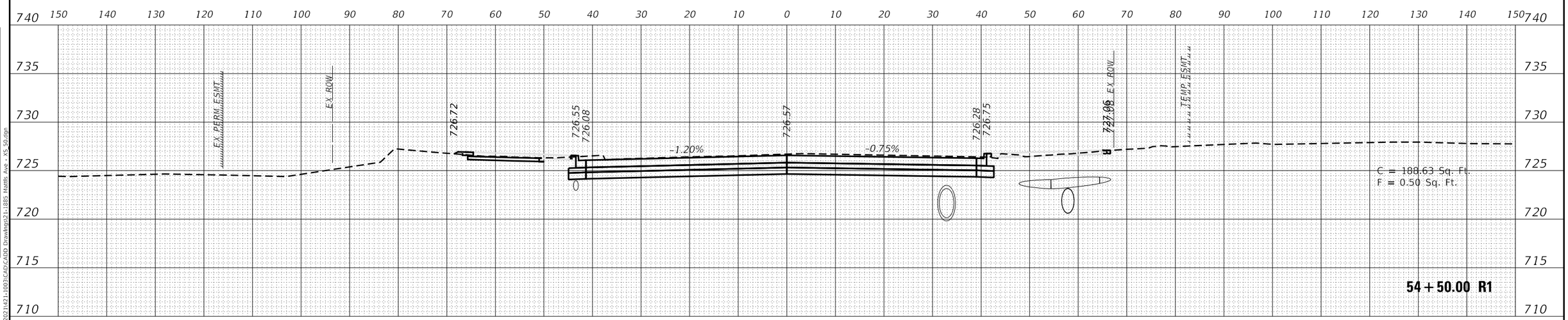

ORIGINAL SURVEY		BY	DATE
NOTE BOOK	SURVEYED		
	PLOTTED		
	TEMPLATE		
	AREAS		
NO.	AREAS CHECKED		

MODEL: PR_MathREV9_23_25
FILE NAME: X:\Production\Files\2021\421-1003\CAD\CADD Drawings\21-1885 Mattis Ave - XS_50.dgn

USER NAME = Nick.Burrus	DESIGNED -	REVISED -
	DRAWN -	REVISED -
PLOT SCALE = 20.0000 ' / in.	CHECKED -	REVISED -
PLOT DATE = 10/1/2025	DATE -	REVISED -

STATE OF ILLINOIS
DEPARTMENT OF TRANSPORTATION

MATTIS AVE.
CROSS SECTIONS

SCALE: | SHEET OF SHEETS | STA. 54+50.00 R1 TO STA. 54+50.00 R1

F.A. RTE.	SECTION	COUNTY	TOTAL SHEETS	SHEET NO.
7159	19-000314-00-PV	CHAMPAIGN	197	194

CONTRACT NO. 91642

ILLINOIS | FED. AID PROJECT

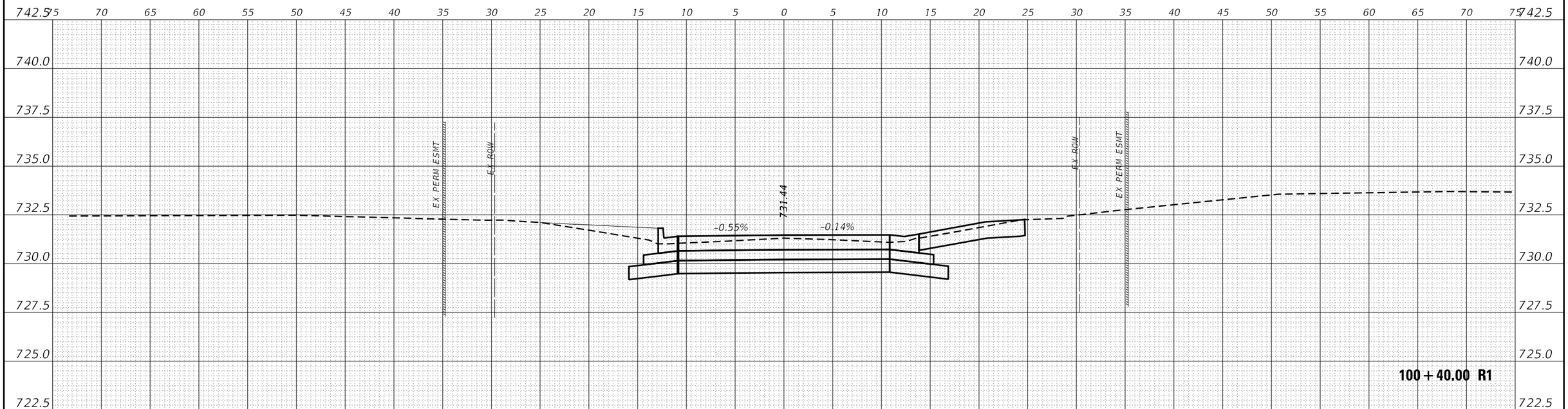

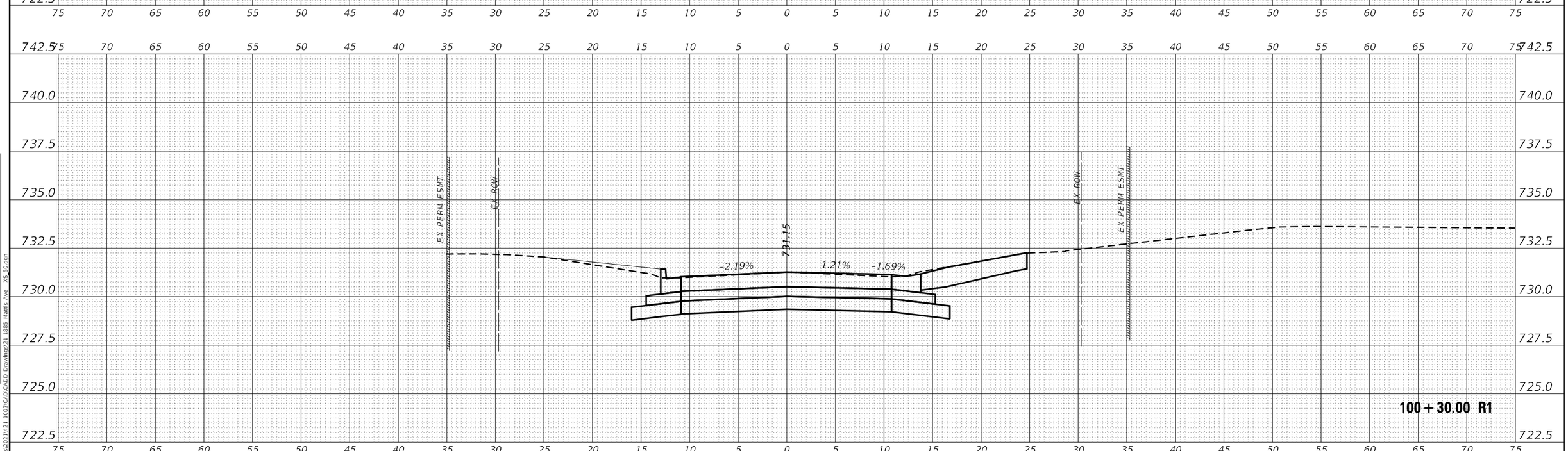

FINAL SURVEY	BY	DATE
SURVEYED		
PLOTTED		
TEMPLATE		
AREAS		
AREAS CHECKED		
NOTE BOOK NO.		

ORIGINAL SURVEY	BY	DATE
SURVEYED		
PLOTTED		
TEMPLATE		
AREAS		
AREAS CHECKED		
NOTE BOOK NO.		

MODEL: EXKENNEY
FILE NAME: X:\Production\Files\2021\421-1003\CAD\CADD Drawings\21-1885 Mattis Ave - XS_50.dgn

LOCHMUELLER GROUP
103 W. Vandalia St., #100
Edwardsville, IL 62025
PHONE: 618.667.1400

USER NAME = Nick.Burrus	DESIGNED -	REVISED -
	DRAWN -	REVISED -
PLOT SCALE = 10.0000 ' / in.	CHECKED -	REVISED -
PLOT DATE = 10/2/2024	DATE -	REVISED -

STATE OF ILLINOIS
DEPARTMENT OF TRANSPORTATION

PROPOSED CROSS SECTIONS
KENNEY AVE.

SCALE: | SHEET OF SHEETS | STA. 100+30.00 R1 TO STA. 100+40.00 R1

F.A. RTE.	SECTION	COUNTY	TOTAL SHEETS	SHEET NO.
7159	19-000314-00-PV	CHAMPAIGN	197	195
		CONTRACT NO. 91642		
		ILLINOIS	FED. AID PROJECT	

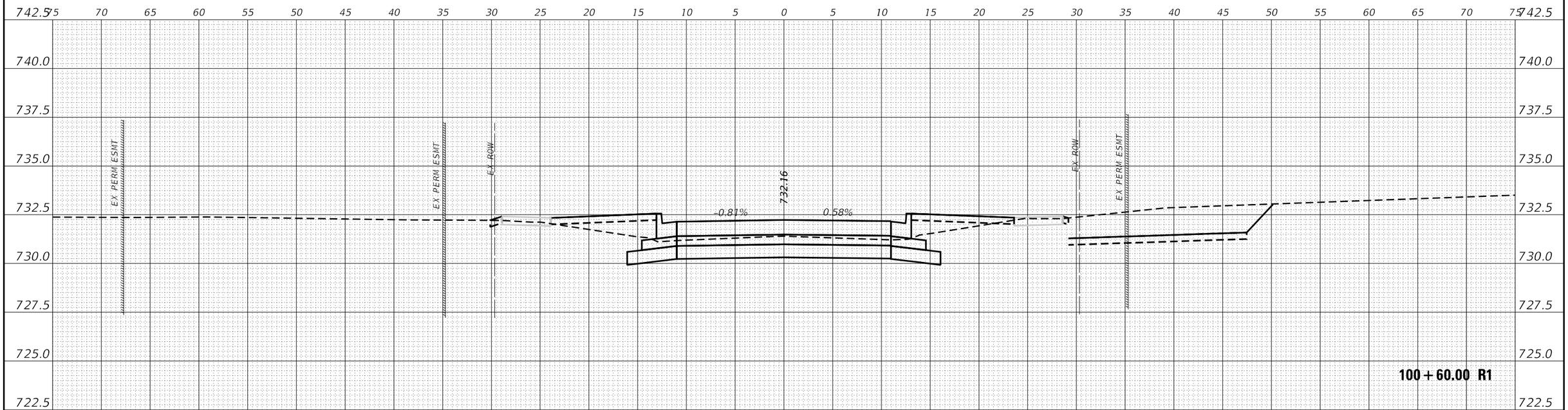

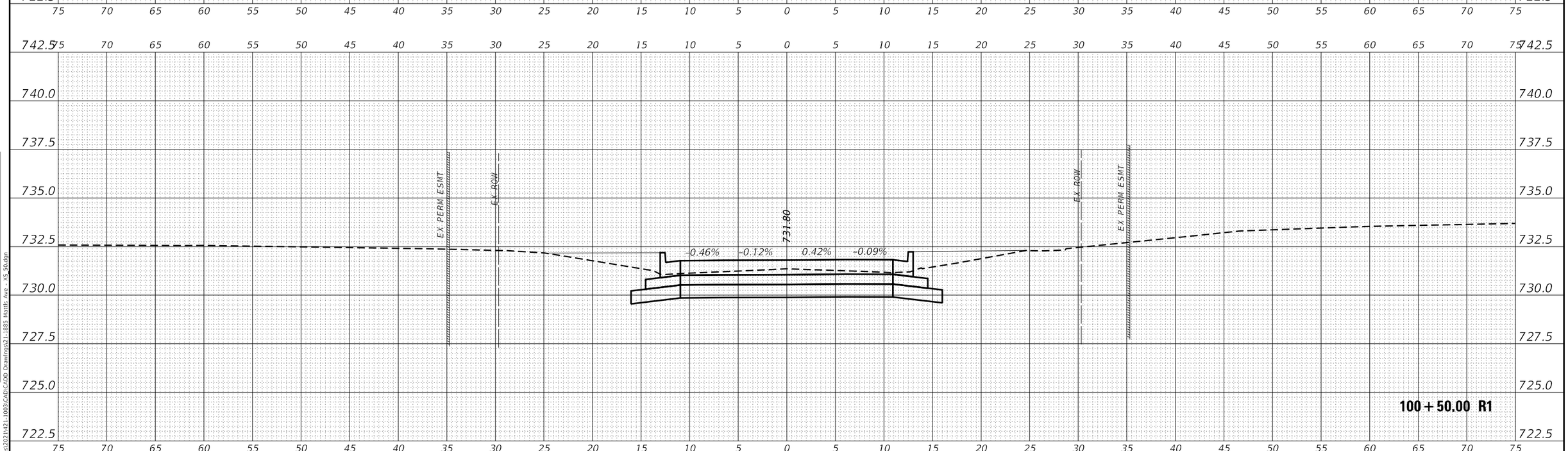

FINAL SURVEY	BY	DATE
SURVEYED		
PLOTTED		
TEMPLATE		
AREAS		
AREAS CHECKED		
NOTE BOOK NO.		

ORIGINAL SURVEY	BY	DATE
SURVEYED		
PLOTTED		
TEMPLATE		
AREAS		
AREAS CHECKED		
NOTE BOOK NO.		

MODEL: EXKENNEY
FILE NAME: X:\Production\Files\2021\21-1003\CAD\CADD Drawings\21-1885 Mattis Ave - XS_50.dgn

LOCHMUELLER GROUP
103 W. Vandalia St., #100
Edwardsville, IL 62025
PHONE: 618.667.1400

USER NAME = Nick.Burrus	DESIGNED -	REVISED -
	DRAWN -	REVISED -
PLOT SCALE = 10.0000 ' / in.	CHECKED -	REVISED -
PLOT DATE = 10/2/2024	DATE -	REVISED -

STATE OF ILLINOIS
DEPARTMENT OF TRANSPORTATION

PROPOSED CROSS SECTIONS
KENNEY AVE.

SCALE: | SHEET OF SHEETS | STA. 100+50.00 R1 TO STA. 100+60.00 R1

F.A. RTE.	SECTION	COUNTY	TOTAL SHEETS	SHEET NO.
7159	19-000314-00-PV	CHAMPAIGN	197	196
		CONTRACT NO. 91642		
		ILLINOIS	FED. AID PROJECT	

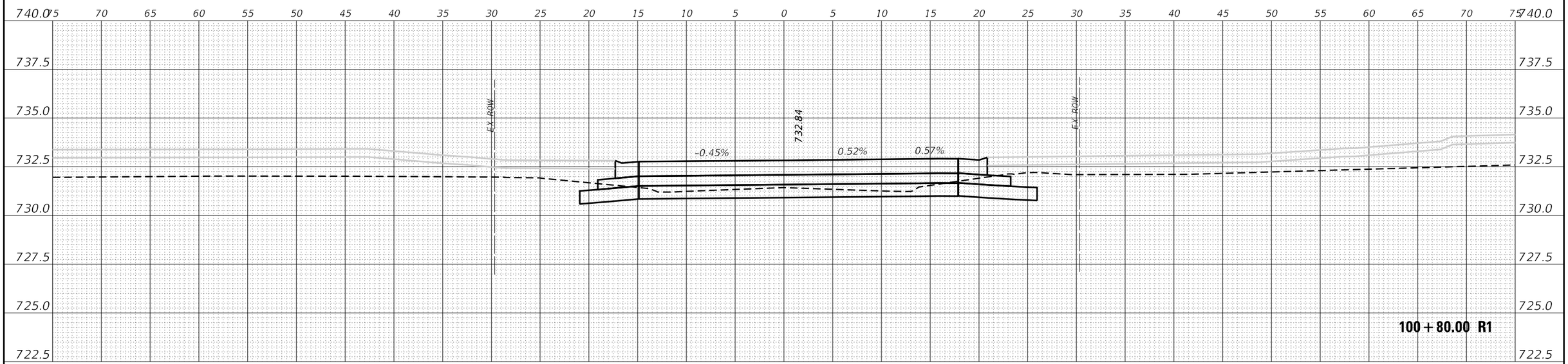

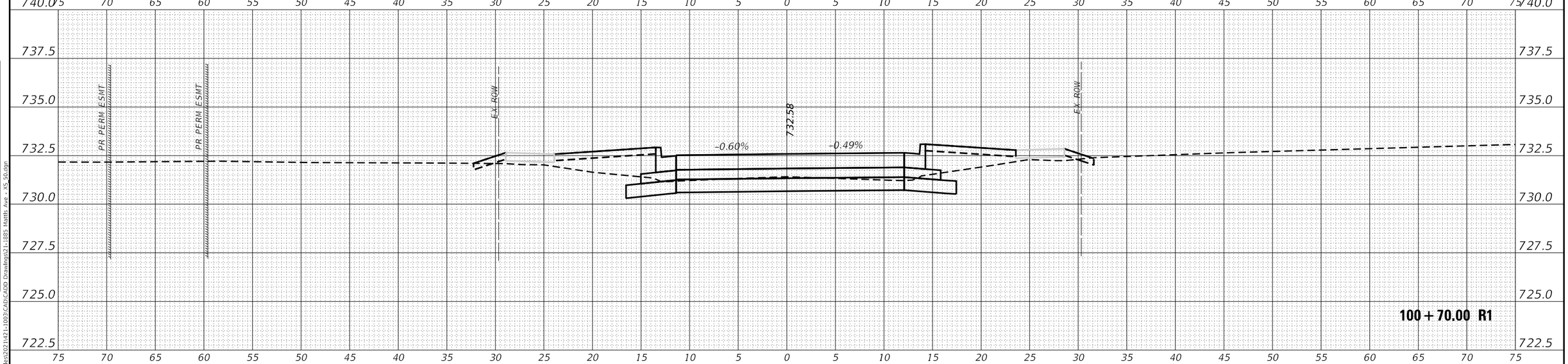

LOCHMUELLER GROUP 103 W. Vandalia St., #100 Edwardsville, IL 62025 PHONE: 618.607.1400	USER NAME = Nick.Burrus	DESIGNED -	REVISED -
		DRAWN -	REVISED -
	PLOT SCALE = 10.0000 ' / in.	CHECKED -	REVISED -
	PLOT DATE = 10/2/2024	DATE -	REVISED -

STATE OF ILLINOIS
DEPARTMENT OF TRANSPORTATION

PROPOSED CROSS SECTIONS
KENNEY AVE.

SCALE: | SHEET OF SHEETS | STA. 100+70.00 R1 TO STA. 100+80.00 R1

F.A. RTE.	SECTION	COUNTY	TOTAL SHEETS	SHEET NO.
7159	19-000314-00-PV	CHAMPAIGN	197	197
		CONTRACT NO. 91642		
	ILLINOIS	FED. AID PROJECT		

FINAL SURVEY: SURVEYED, PLOTTED, TEMPLATE, AREAS, AREAS CHECKED; NOTE BOOK; NO.; BY; DATE

ORIGINAL SURVEY: SURVEYED, PLOTTED, TEMPLATE, AREAS, AREAS CHECKED; NOTE BOOK; NO.; BY; DATE

MODEL: EXKENNEY
FILE NAME: X:\Production\Files\2021\21-1003\CADD Drawings\21-1003 Mattis Ave - XS 50.dgn