Bench Mark: Square cut on middle step of S.E. wingwall of bridge over Richards WB roadway. Elev. = 558.98
Existing Structure: The eastern portion of SN 099-W801 from Sta. 716+10.02 to Sta. 719+81.55 was constructed in 2024 as Project NHPP-HB1K (096), Section 2013-008B. The existing structure is a mechanically stabilized earth retaining wall with precast panels. The wall supports a CIP anchorage slab with a 44" tall barrier. Existing wall is to remain.
Staged construction shall be utilized to maintain traffic during construction.
No salvage.

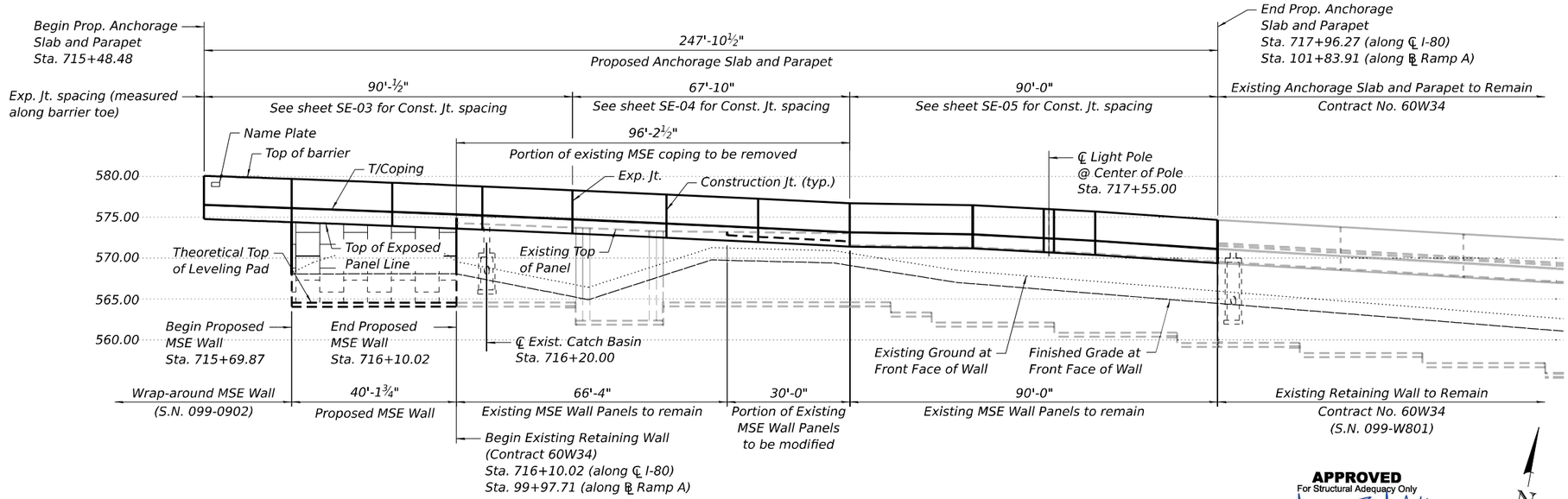

APPROVED
For Structural Adequacy Only
Engineer of Bridges & Structures

N

ELEVATION

(Shown along Front Face of MSE Wall, Looking at Front Face of MSE Wall)

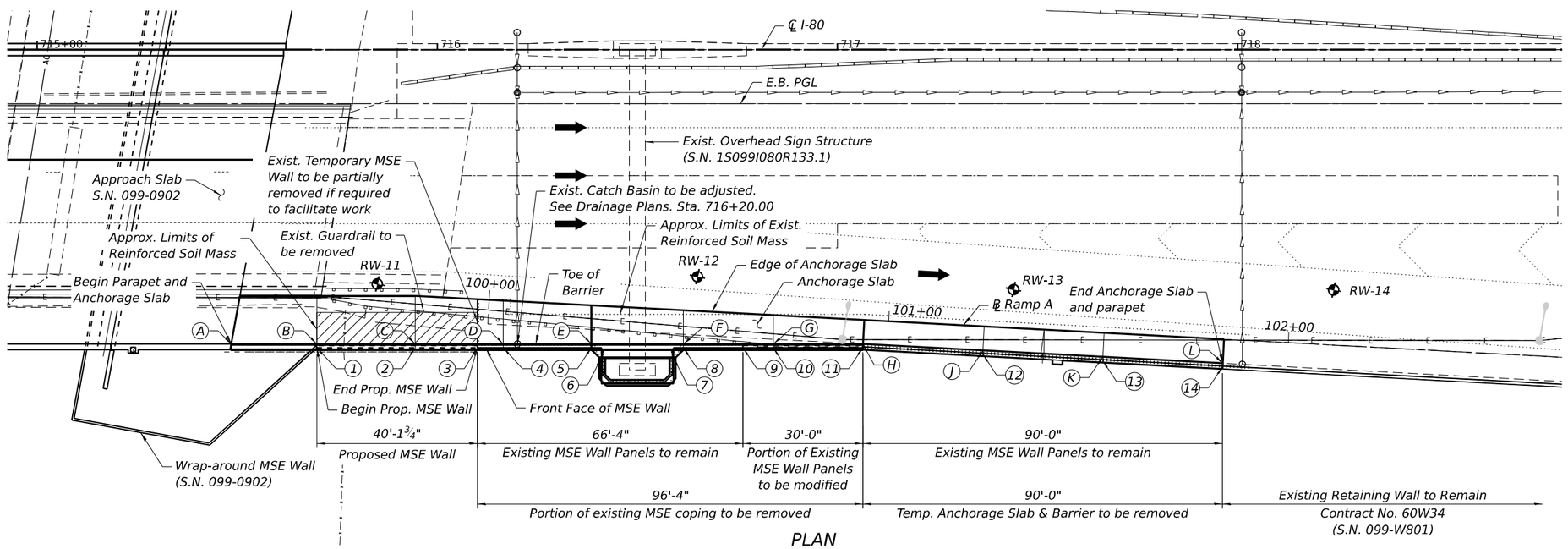

PLAN

NOTES

1. Offsets are measured from ℄ I-80 to front face of MSE wall panels for MSE Wall Control Points.
2. Offsets and elevations are measured from ℄ I-80 to proposed gutter line and toe of the barrier for Anchorage Slab Control Points.

DESIGN SPECIFICATIONS

2020 AASHTO LRFD Bridge Design Specifications, 9th Edition

DESIGN STRESSES

FIELD UNITS
f'c = 4,000 psi (Anchorage Slab and Parapet)
fy = 60,000 psi (Reinforcement)
PRECAST UNITS
f'c = 4,500 psi (Precast Panels)

DESIGN LOADS

The MSE Wall supplier's internal stability design shall account for the anchorage slab's bearing pressure surcharge of 1.0 ksf and horizontal sliding force of 0.5 kips/ft of wall.

HNTB CORPORATION

LICENSED STRUCTURAL ENGINEER
Alan P. Cubas
081-008238
STATE OF ILLINOIS

DATE SIGNED: 10/31/2025
ALAN P. CUBAS, P.E., S.E.
NO. 081-008238
EXP. DATE: 11/30/2026

SEAL AND SIGNATURE APPLY TO:
SHEETS 1-10

LEGEND:

- Exist. Light Pole
- Boring
- Exist. Lighting Power Pole
- Approximate Limits of Reinforced Soil Mass
- Control Point

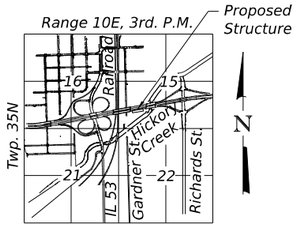

LOCATION SKETCH

GENERAL PLAN AND ELEVATION
RETAINING WALL 2, EB I-80
F.A.I. RTE. 80 - SEC. 2017-057F
WILL COUNTY
STATION 715+69.87 TO 716+10.02
STRUCTURE NO. 099-W801

MODEL: SHEET
FILE NAME: C:\TRANSYSTEMS\PW_LOCAL\TRANSYSTEMS-PW-01\DMS20862\099W801-62F94-001-GPE.DGN

HNTB	USER NAME =	DESIGNED - MVV	REVISED -
		CHECKED - APC	REVISED -
	PLOT SCALE =	DRAWN - LK	REVISED -
	PLOT DATE =	CHECKED - MVV	REVISED -

STATE OF ILLINOIS
DEPARTMENT OF TRANSPORTATION

GENERAL PLAN AND ELEVATION
STRUCTURE NO. 099-W801 (EB)
SHEET SE-01 OF SE-10 SHEETS

F.A.I. RTE.	SECTION	COUNTY	TOTAL SHEETS	SHEET NO.
80	2017-057F	WILL	1342	901
		CONTRACT NO. 62F94		
	ILLINOIS	FED. AID PROJECT		

10-27-2025, 16:55:08

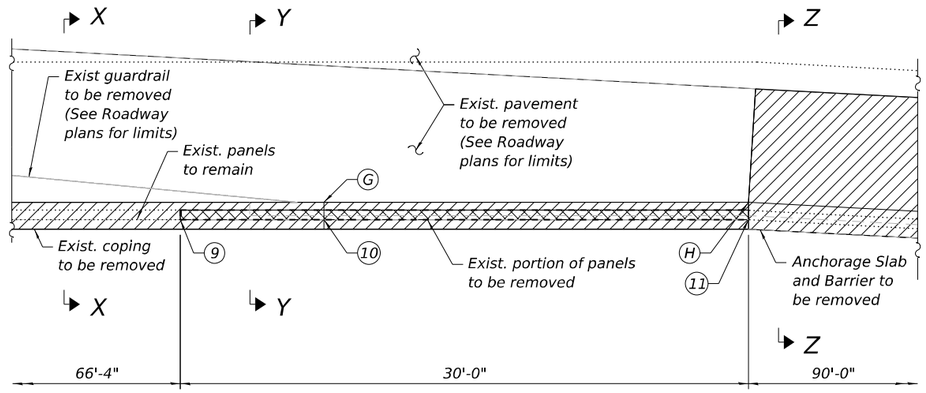

REMOVAL PLAN

SHOULDER TRANSITION

FAI-80 Sta.	Width	Slope
715+48.48	12'-0"	-2.00%
715+51.00	12'-0"	-2.00%
716+11.00	11'-1⅜"	-4.00%
717+96.27	6'-0"	-4.00%

TOTAL BILL OF MATERIAL

ITEM	UNIT	TOTAL
Removal of Existing Structures No. 7	Each	1
Structure Excavation	Cu. Yd.	313
Concrete Superstructure	Cu. Yd.	155.6
Protective Coat	Sq. Yd.	440
Reinforcement Bars, Epoxy Coated	Pound	22,550
Pipe Handrail	Foot	29
Name Plates	Each	1
Mechanically Stabilized Earth Retaining Wall	Sq. Ft.	388

LEGEND:

Approximate Limits of Removal of Existing Moment Slab, Barrier, and Coping to be paid for under "Removal of Existing Structures No. 7"

Approximate Limits of Existing Panel Removal to be paid for under "Removal of Existing Structures No. 7"

SUGGESTED SEQUENCE OF CONSTRUCTION

1. Remove existing temporary anchorage slab, temporary barrier, temporary coping, portion of existing panels as shown in the removal plan, and lighting.
2. Excavate for proposed MSE wall construction. Utilize existing temporary MSE wall at west end of existing MSE wall. Remove a top portion of existing temporary MSE wall 1' below proposed anchorage slab. Cost of this work to be paid for under "Removal of Existing Structures No. 7".
3. Construct proposed MSE wall in EB Stage II simultaneously with the wrap-around MSE of adjacent SN 099-0902 prior to constructing the bridge approach slab.
4. Construct anchorage slab and barrier.

INDEX OF SHEETS

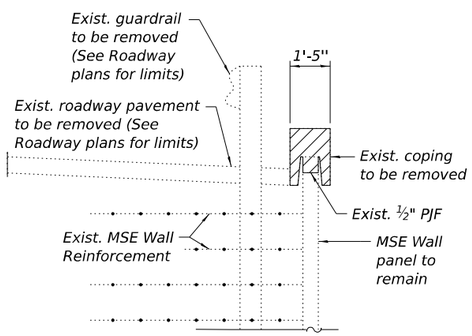

SECTION X-X

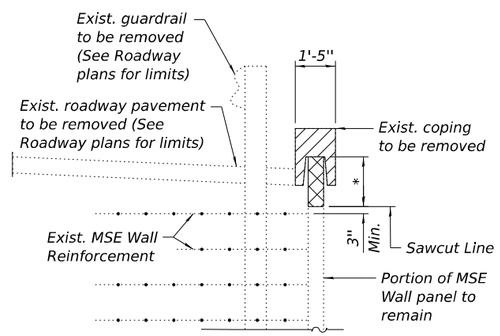

SECTION Y-Y

* Varies, 5" Min., 1'-0⅞" Max.

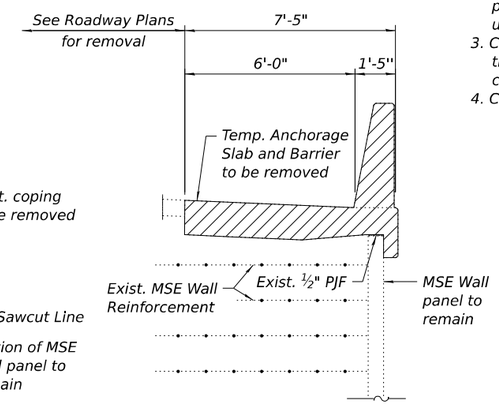

SECTION Z-Z

ANCHORAGE SLAB CONTROL POINTS

Description	FAI-80 Sta.	Offset	Elev. @ Toe of Barrier
Point A	715+48.48	73.50	576.46
Point B	715+69.87	73.50	576.00
Point C	715+94.45	73.50	575.44
Point D	716+16.48	73.50	574.95
Point E	716+38.52	73.50	574.51
Point F	716+61.52	73.50	574.02
Point G	716+83.93	73.50	573.51
Point H	717+06.35	73.50	572.98
Point J	717+36.36	75.10	572.17
Point K	717+66.32	76.71	571.31
Point L	717+96.27	78.31	570.44

MSE WALL CONTROL POINTS

Description	FAI-80 Sta.	Offset	T/ Exposed Panel Line Elev	Finished Grade Elev @ F.F. Wall	T/ Theoretical Leveling Pad Elev	Existing Grade Elev @ F.F. Wall
Point 1	715+69.87	74.42 Rt.	574.38	567.75	564.25	568.18
Point 2	715+94.45	74.42 Rt.	573.82	567.75	564.25	570.77
Point 3	716+10.02	74.42 Rt.	573.46	567.75	564.25	569.25
Point 4	716+16.48	74.42 Rt.	573.33	567.35	564.25	568.85
Point 5	716+38.52	74.42 Rt.	572.88	565.30	562.00	566.80
Point 6	716+41.01	76.92 Rt.	572.88	565.03	562.00	566.53
Point 7	716+59.01	76.92 Rt.	572.39	567.36	562.00	568.86
Point 8	716+61.52	74.42 Rt.	572.39	565.13	562.00	566.63
Point 9	716+76.35	74.42 Rt.	572.06	567.36	564.25	568.86
Point 10	716+83.93	74.42 Rt.	571.89	567.32	564.25	568.82
Point 11	717+06.35	74.42 Rt.	571.36	567.05	564.25	568.55
Point 12	717+36.31	76.02 Rt.	570.55	566.52	561.75	568.02
Point 13	717+66.27	77.62 Rt.	569.69	565.31	560.50	566.81
Point 14	717+96.22	79.23 Rt.	568.82	564.11	559.25	565.61

STA. 715+69.87 TO 716+10.02
BUILT 202_ BY
STATE OF ILLINOIS
F.A.I. RTE. 80-SEC. 2017-057F
LOADING HL-93
STR. NO. 099-W801

NAME PLATE

See Std. 515001

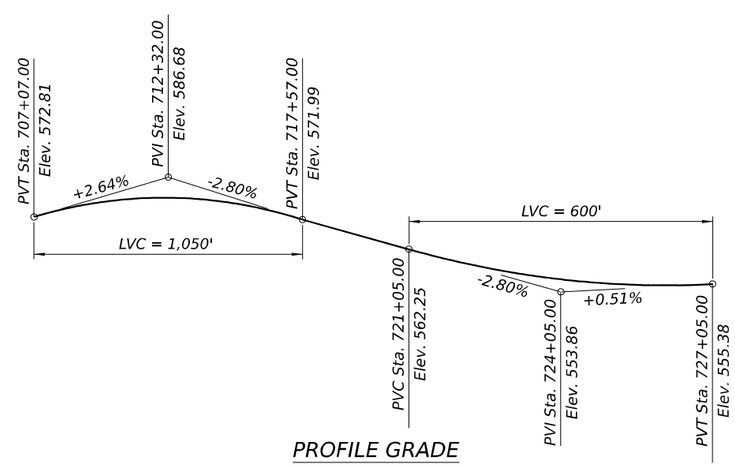

PROFILE GRADE

(Along PGL of EB & WB Roadway)
(The profile grade shows the final elevations after grinding)

GENERAL NOTES

1. Reinforcement bars designated (E) shall be epoxy coated.
2. Slipforming of the barrier is not allowed.
3. The proposed wall panels shall match the existing panel height, width, spacing, color, and finish.

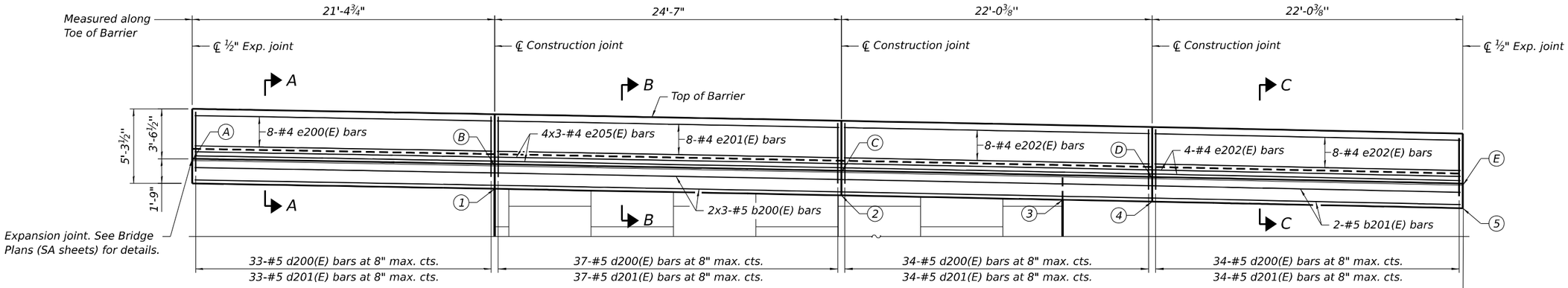

ELEVATION

(Looking North)
(Conduit not shown for clarity)

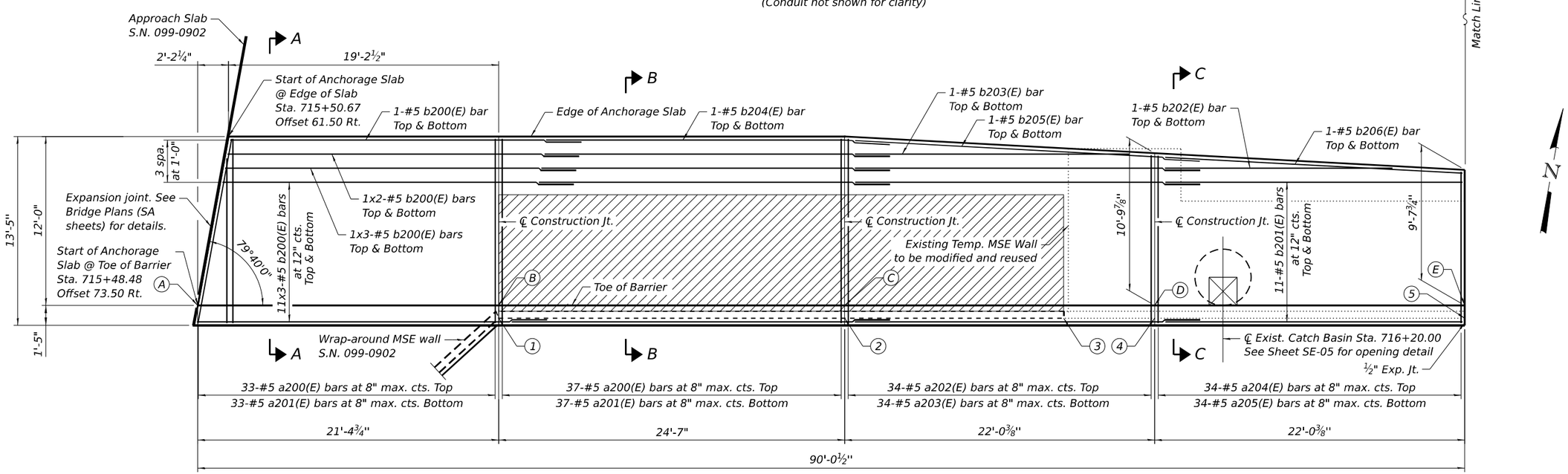

PARTIAL PLAN

(Conduit not shown for clarity)

MIN LAP LENGTH

#4 Bar - 2'-8"
#5 Bar - 3'-6"

LEGEND:

Approximate Limits of Reinforced Soil Mass

NOTES:

1. Bars noted thus, 3x2-#5 indicates 3 lines of bars with 2 lengths of bar per line.
2. For control point station, offset, and elevations, see Sheet SE-02.
3. For detail of Sections A-A, B-B, and C-C see Sheet SE-06.
4. For joint details, see Sheet SE-07.
5. For Reinforcement Bars, Epoxy Coated Bill of Materials, see Sheet SE-08.

MODEL: SHEET
FILE NAME: C:\TRANSYSTEMS\PW_LOCAL\TRANSYSTEMS-PW-01\DMS20862\099W801-62F94-003-DET1.DGN

HNTB

USER NAME =	DESIGNED - MVV	REVISED -	
	CHECKED - APC	REVISED -	
PLOT SCALE =	DRAWN - LK	REVISED -	
PLOT DATE =	CHECKED - MVV	REVISED -	

STATE OF ILLINOIS
DEPARTMENT OF TRANSPORTATION

DETAILED PLAN AND ELEVATION 1
STRUCTURE NO. 099-W801 (EB)

SHEET SE-03 OF SE-10 SHEETS

F.A.I. RTE.	SECTION	COUNTY	TOTAL SHEETS	SHEET NO.
80	2017-057F	WILL	1342	903
		CONTRACT NO. 62F94		
		ILLINOIS	FED. AID PROJECT	

10-27-2025, 16:55:22

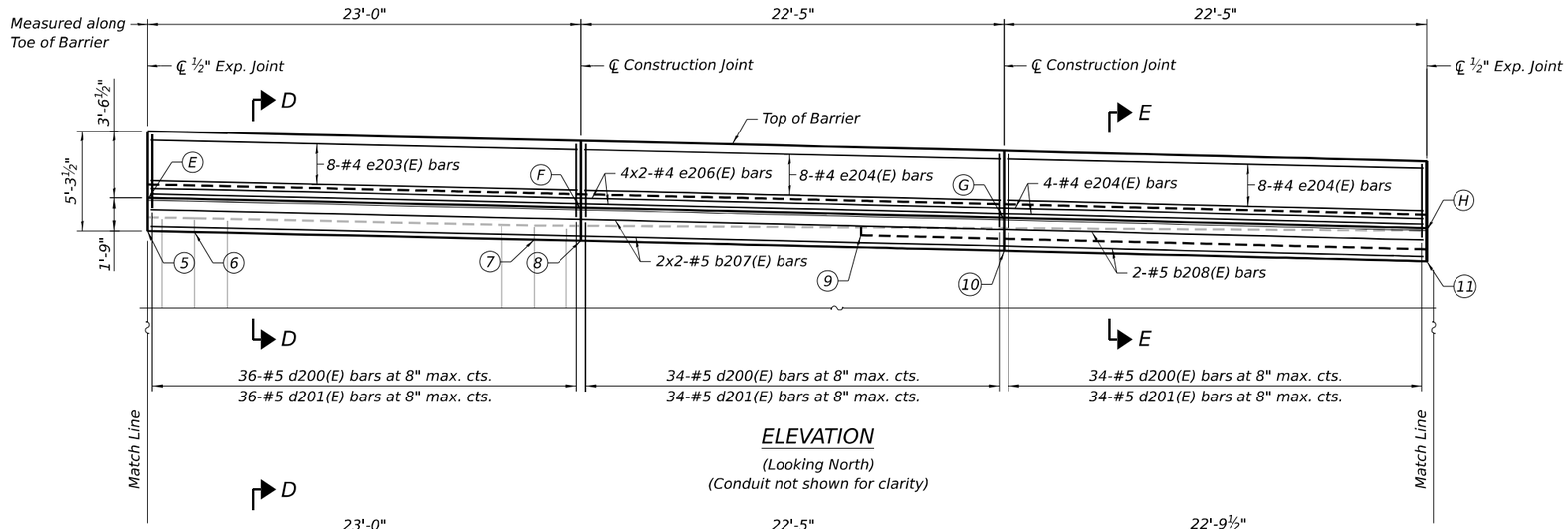

ELEVATION

(Looking North)
(Conduit not shown for clarity)

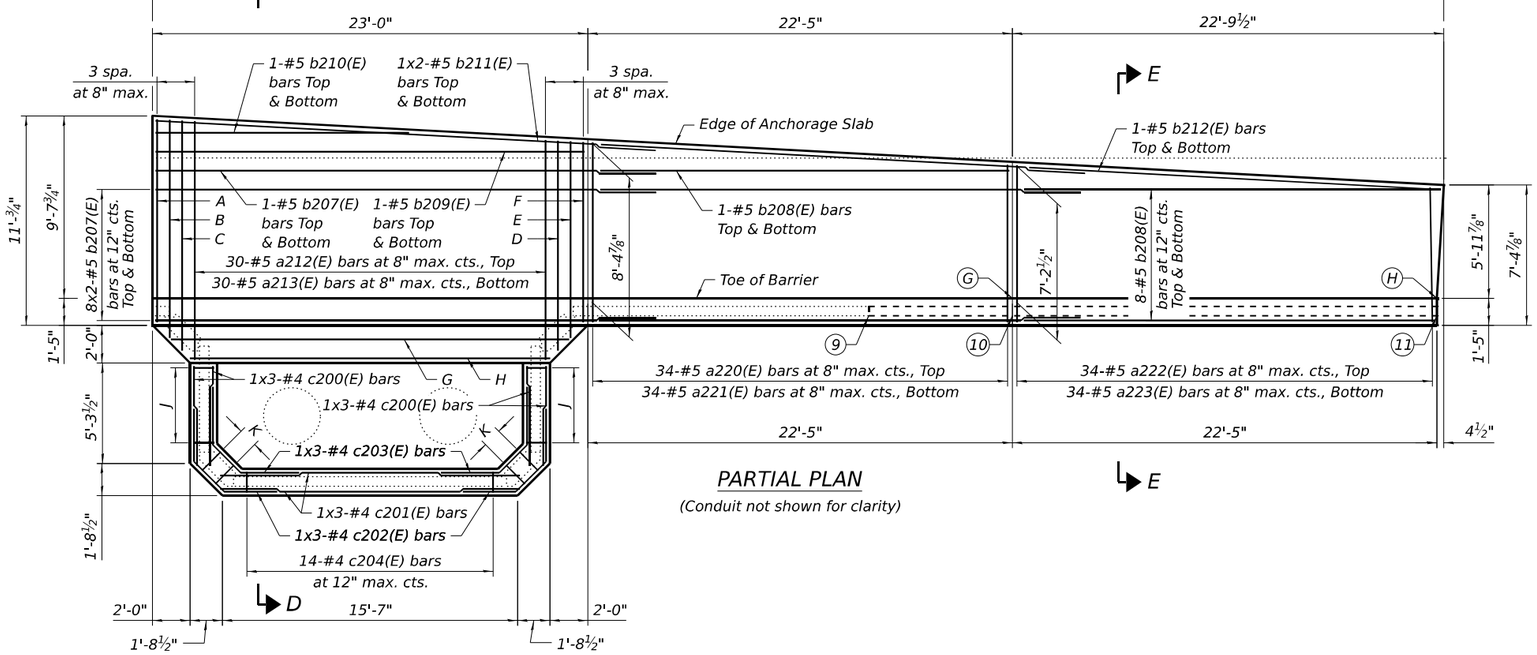

PARTIAL PLAN

(Conduit not shown for clarity)

A - 1-#5 a206(E) Top, 1-#5 a207(E) Bottom

B - 1-#5 a208(E) Top, 1-#5 a209(E) Bottom

C - 1-#5 a210(E) Top, 1-#5 a211(E) Bottom

D - 1-#5 a214(E) Top, 1-#5 a215(E) Bottom

E - 1-#5 a216(E) Top, 1-#5 a217(E) Bottom

F - 1-#5 a218(E) Top, 1-#5 a219(E) Bottom

G - 1-#5 b213(E) bars Top & Bottom

H - 1-#5 b214(E) bars Top & Bottom

J - 5-#4 c204(E) bars at 12" cts. max.

K - 2-#4 c205(E) bars at 12" cts. max.

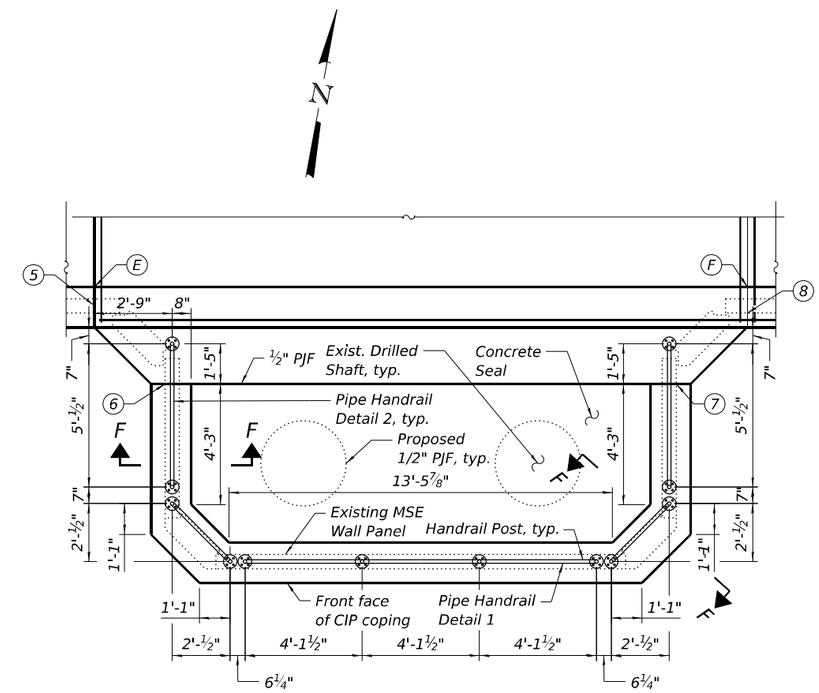

DETAIL A

(Coping reinforcement not shown for clarity)

NOTES:

1. For notes, see Sheet SE-03.
2. For detail of Sections D-D and E-E, see Sheet SE-07.
3. For detail of Section F-F and Pipe Handrail details, see Sheet SE-08.

MODEL: SHEET
FILE NAME: C:\TRANSYSTEMS\PW_LOCAL\TRANSYSTEMS-PW-01\DMS20862\099W801-62F94-004-DET2.DGN

10-27-2025, 16:55:24

HNTB

USER NAME =	DESIGNED - MVV	REVISED -	
	CHECKED - APC	REVISED -	
PLOT SCALE =	DRAWN - LK	REVISED -	
PLOT DATE =	CHECKED - MVV	REVISED -	

STATE OF ILLINOIS
DEPARTMENT OF TRANSPORTATION

DETAILED PLAN AND ELEVATION 2
STRUCTURE NO. 099-W801 (EB)

SHEET SE-04 OF SE-10 SHEETS

F.A.I. RTE.	SECTION	COUNTY	TOTAL SHEETS	SHEET NO.
80	2017-057F	WILL	1342	904
		CONTRACT NO. 62F94		
		ILLINOIS	FED. AID PROJECT	

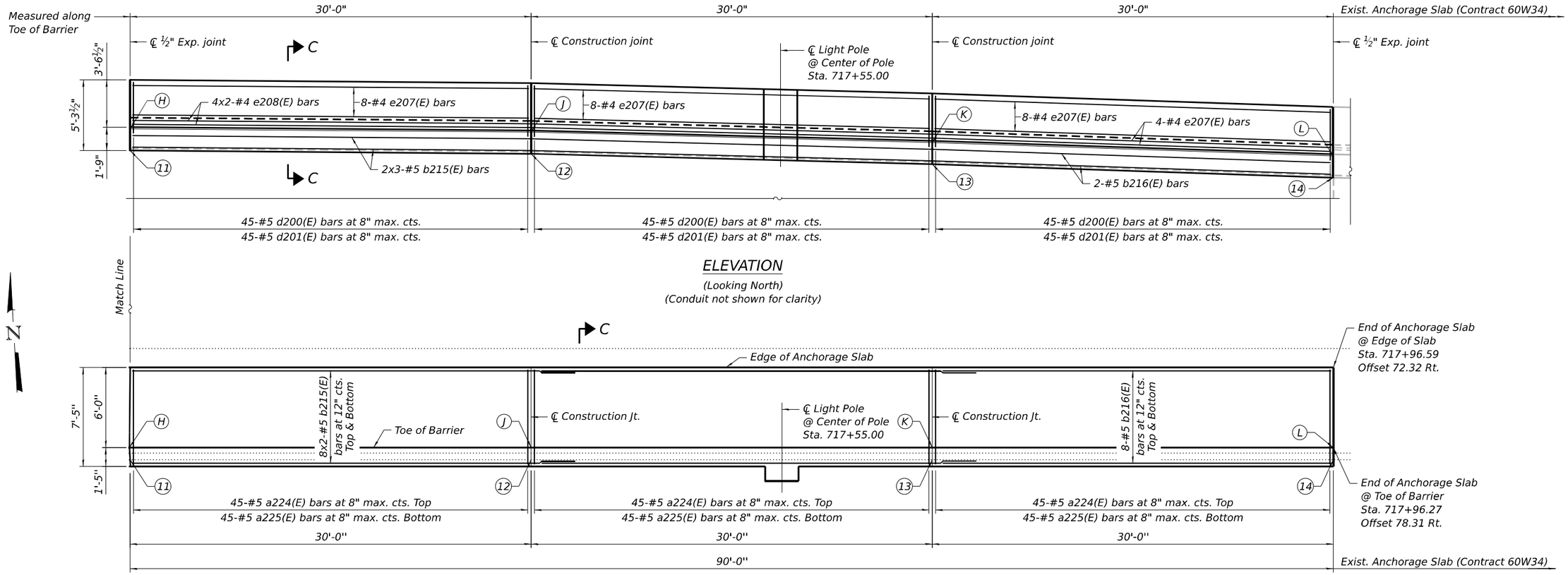

ELEVATION

(Looking North)
(Conduit not shown for clarity)

PARTIAL PLAN

(Conduit not shown for clarity)

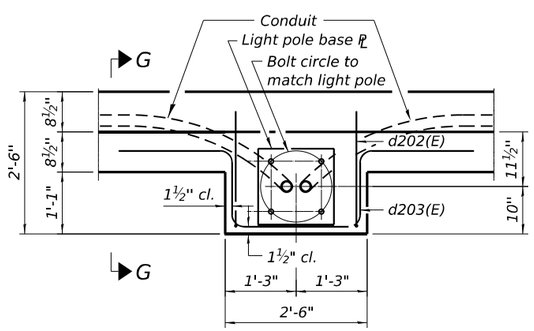

LIGHT POLE PLAN

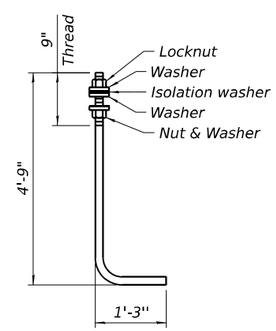

ANCHOR ROD

Diameter as specified for light poles, (ASTM 1554 Grade 105) full length hot dipped galvanized.

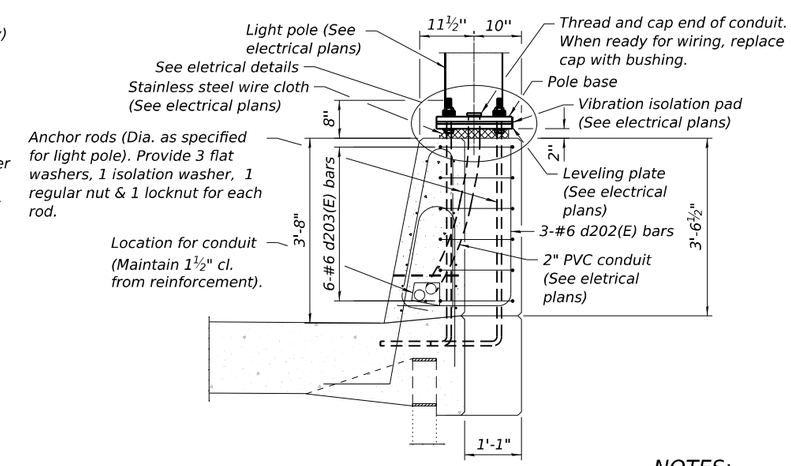

SECTION G-G

NOTES:

1. For notes, see Sheet SE-03.
2. For detail of Section C-C see Sheet SE-06.
3. Cost of anchor rods is included with Concrete Superstructure.

MODEL: SHEET
FILE NAME: C:\TRANSYSTEMS\PW_LOCAL\TRANSYSTEMS-PW-01\DMS20862\099W801-62F94-005-DET3.DGN

HNTB

USER NAME =	DESIGNED - MVV	REVISED -	
	CHECKED - APC	REVISED -	
PLOT SCALE =	DRAWN - LK	REVISED -	
PLOT DATE =	CHECKED - MVV	REVISED -	

STATE OF ILLINOIS
DEPARTMENT OF TRANSPORTATION

DETAILED PLAN AND ELEVATION 3
STRUCTURE NO. 099-W801 (EB)

SHEET SE-05 OF SE-10 SHEETS

F.A.I. RTE.	SECTION	COUNTY	TOTAL SHEETS	SHEET NO.
80	2017-057F	WILL	1342	905

CONTRACT NO. 62F94

ILLINOIS | FED. AID PROJECT

10-27-2025, 16:55:28

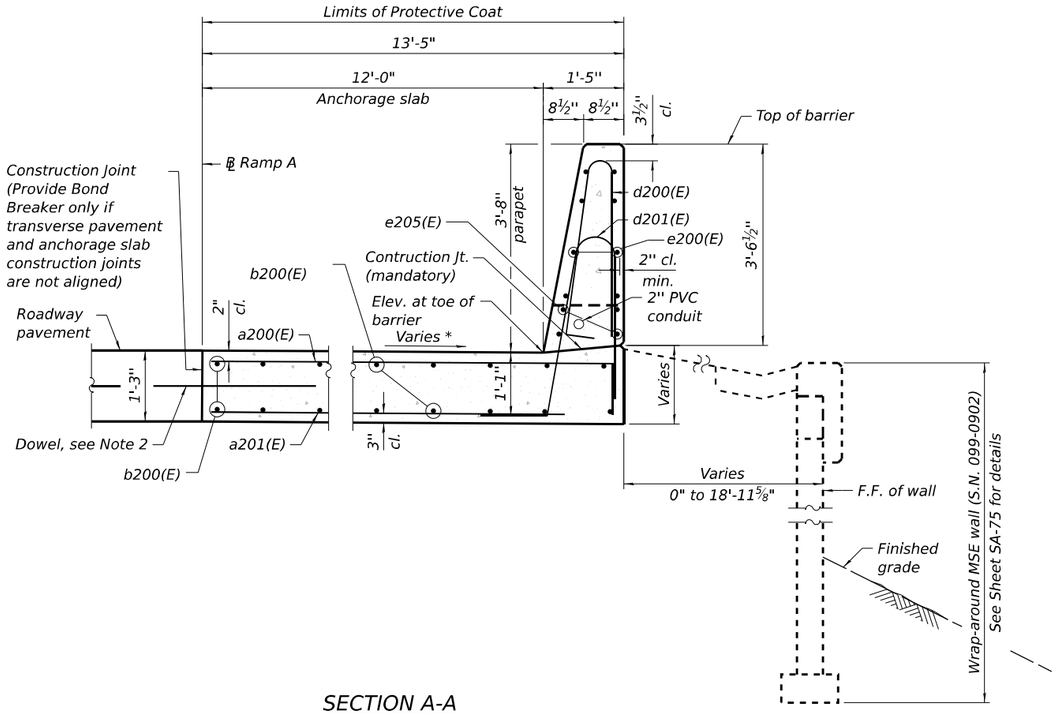

SECTION A-A

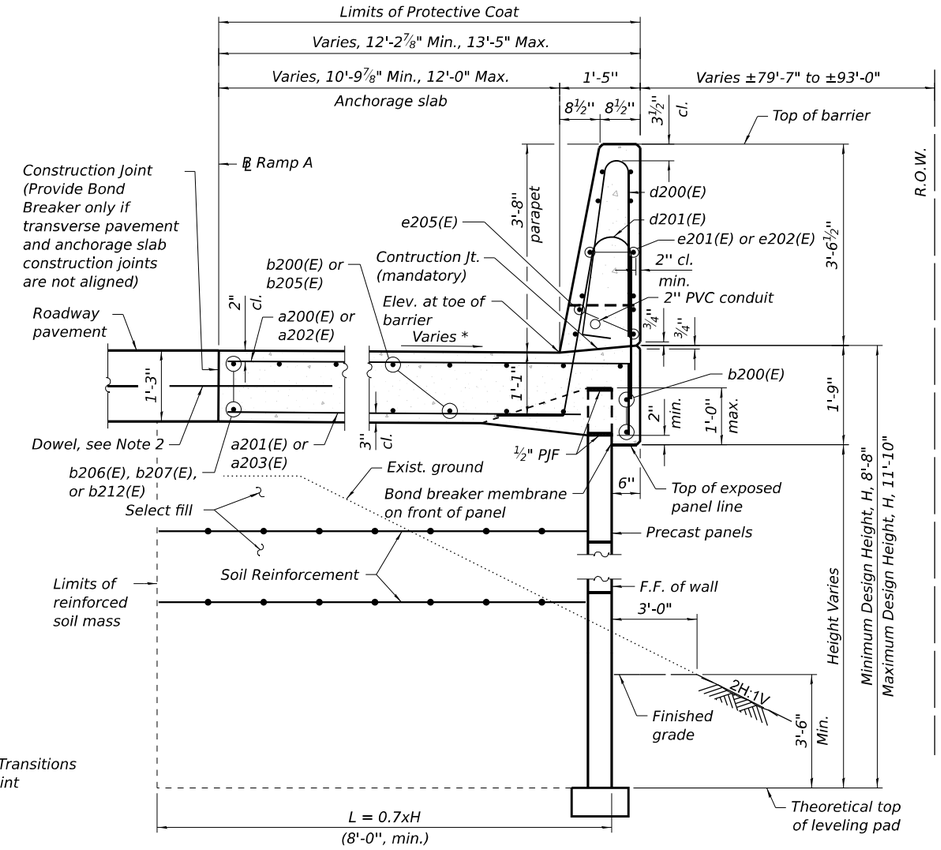

SECTION B-B

* See Sheet SE-02 for Shoulder Transitions
** At right angles to Expansion Joint

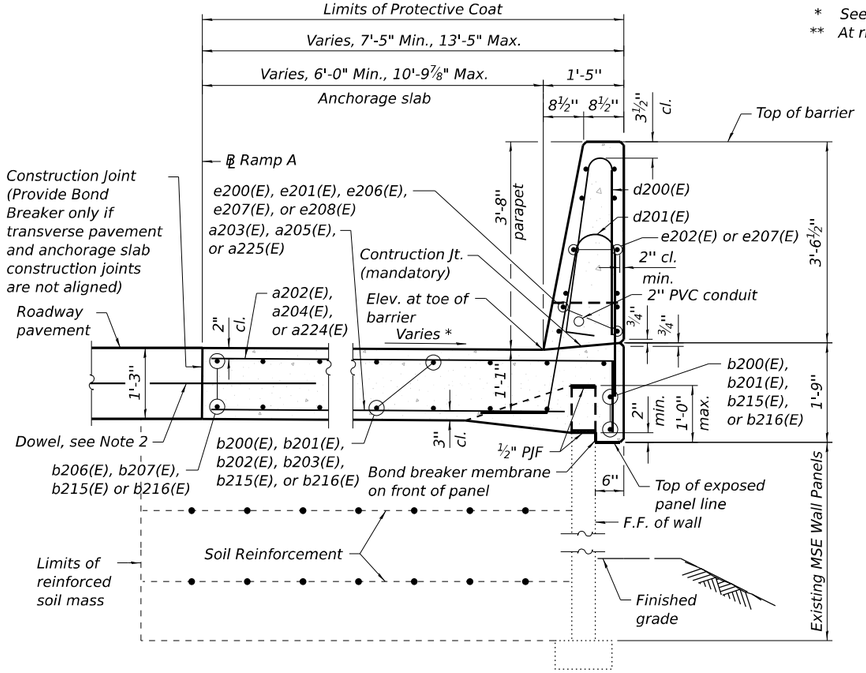

SECTION C-C
(Catch Basin not shown for clarity)

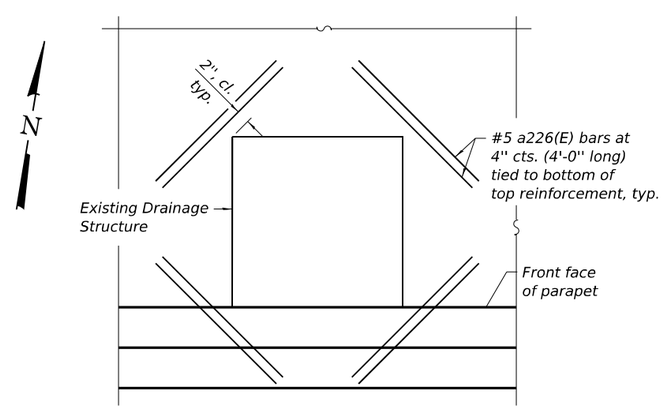

ADDITIONAL REINFORCEMENT
AT DRAINAGE STRUCTURE PLAN

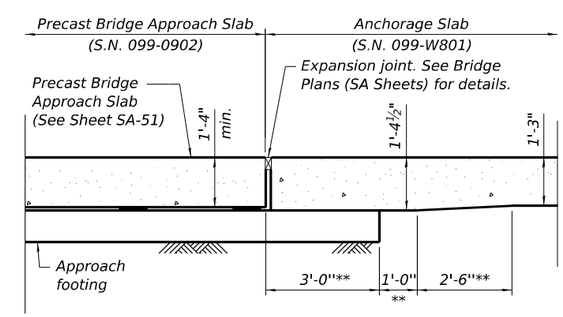

JOINT DETAIL AT APPROACH
SLAB AND ANCHORAGE SLAB

Notes:
1. For Reinforcement Bars, Epoxy Coated Bill of Material, see Sheet SE-08.
2. #6 (E) 4'-0" long dowel bars shall be placed at mid-depth of anchorage slab at a maximum of 3'-0" plan spacing. If dowel bar aligns within 1'-6" of a pavement joint, the dowel bar shall be repositioned such that it is placed at a minimum of 1'-6" from either side of the pavement joint. Cost for dowel bars shall be included with Reinforcement Bars, Epoxy Coated.
3. Cast frame into anchorage slab and form opening to structure.\
4. The Concrete Seal shall be installed according to Article 511 of the Standard Specifications. The cost of Concrete Seal shall be included in the cost of Mechanically Stabilized Earth Retaining Wall.

MODEL: SHEET
FILE NAME: C:\TRANSYSTEMS\PW_LOCAL\TRANSYSTEMS-PW-01\DMS20862\099W801-62F94-006-DET03.DGN
10-27-2025, 16:55:34

HNTB

USER NAME =	DESIGNED - MVV	REVISED -	
	CHECKED - APC	REVISED -	
PLOT SCALE =	DRAWN - LK	REVISED -	
PLOT DATE =	CHECKED - MVV	REVISED -	

STATE OF ILLINOIS
DEPARTMENT OF TRANSPORTATION

WALL DETAILS 1
STRUCTURE NO. 099-W801 (EB)
SHEET SE-06 OF SE-10 SHEETS

F.A.I. RTE.	SECTION	COUNTY	TOTAL SHEETS	SHEET NO.
80	2017-057F	WILL	1342	906
		CONTRACT NO. 62F94		
		ILLINOIS	FED. AID PROJECT	

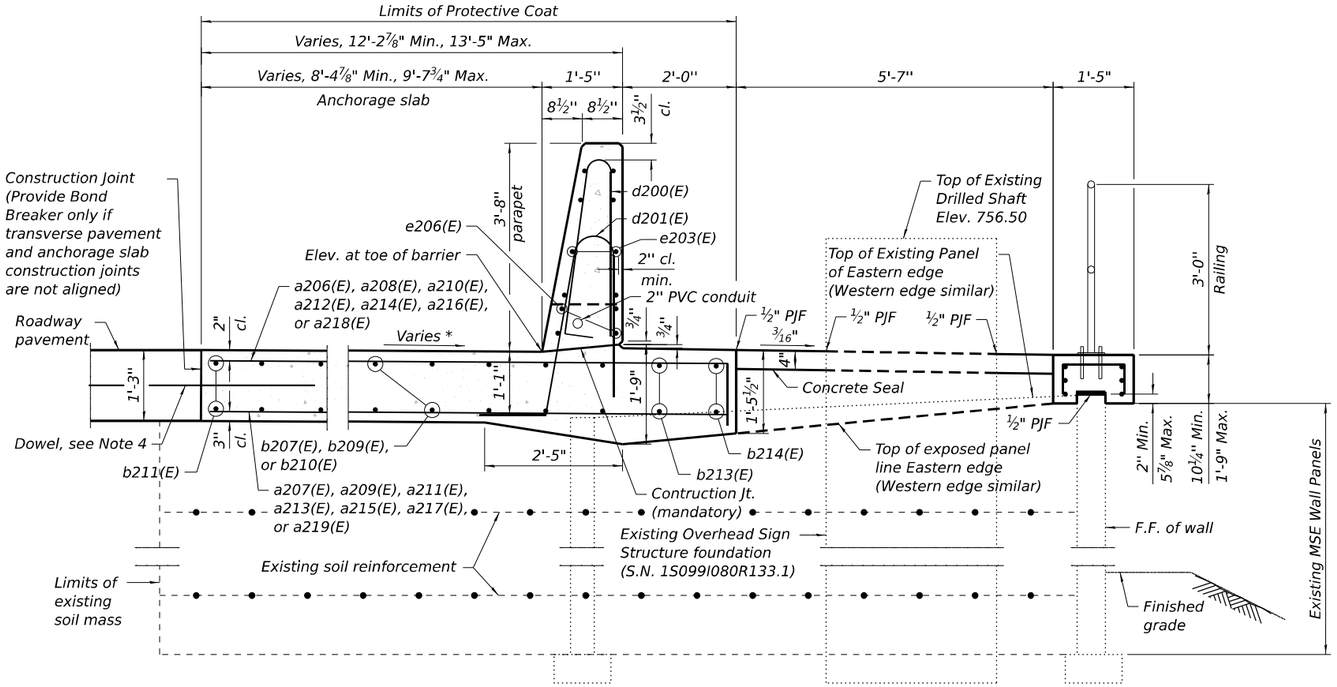

SECTION D-D

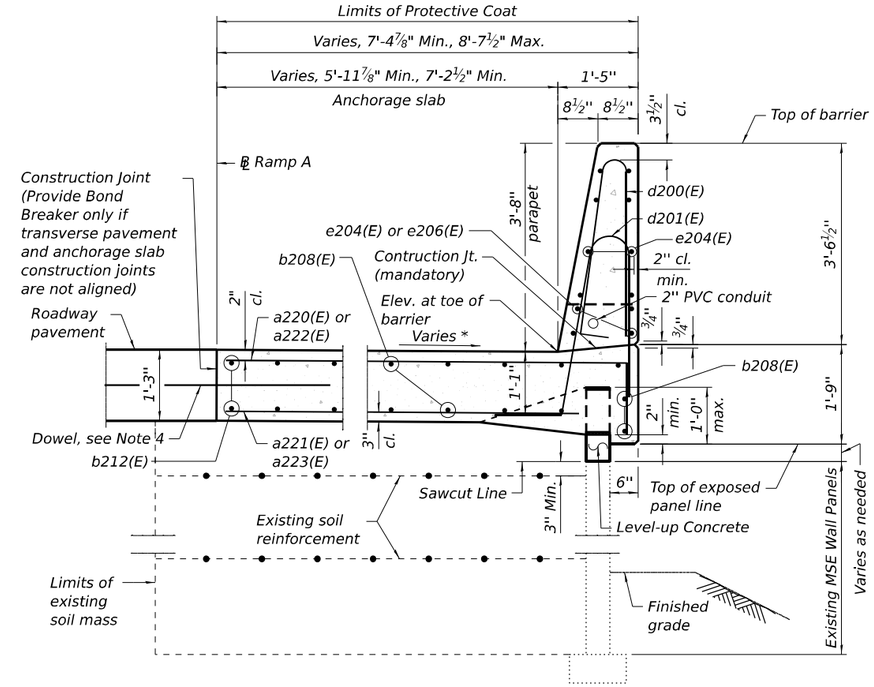

SECTION E-E

* See Sheet SE-02 for Shoulder Transitions

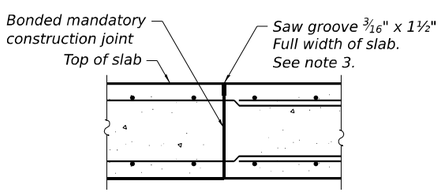

TRANSVERSE CONSTRUCTION JT. IN SLAB - SECTION

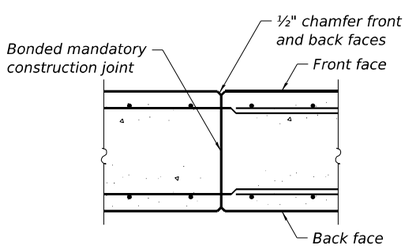

TRANSVERSE CONSTRUCTION JT. IN BARRIER - PLAN

(Section below Cork joint)

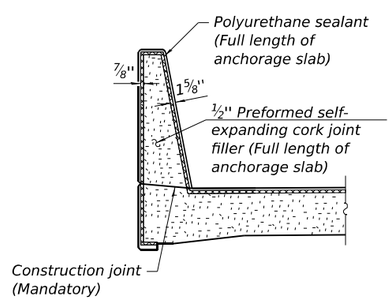

EXPANSION JOINT

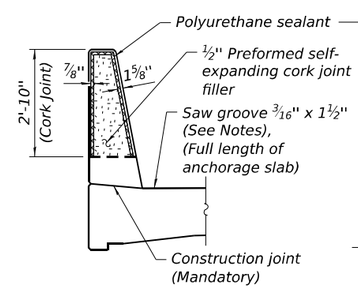

CONSTRUCTION JOINT

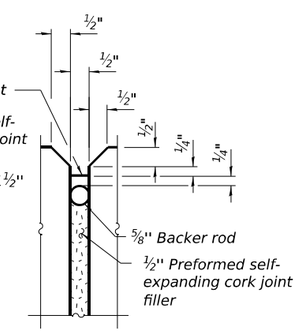

BACKFACE PLAN

TRANSVERSE JOINT DETAILS

Notes:

1. The Polyurethane Sealant shall be according to Article 1050.04 of the Standard Specifications and the color shall be gray.
2. Cost of expansion joints shall be included with Concrete Superstructure. Joint for 44" barrier shown. Joint at 72" barrier is similar.
3. The saw groove shall use a hot poured joint sealer per Article 1050.02 of the Standard Specifications.
4. #6 (E) 4'-0" long dowel bars shall be placed at mid-depth of anchorage slab at a maximum of 3'-0" plan spacing. If dowel bar aligns within 1'-6" of a pavement joint, the dowel bar shall be repositioned such that it is placed at a minimum of 1'-6" from either side of the pavement joint. Cost for dowel bars shall be included with Reinforcement Bars, Epoxy Coated.
5. The Concrete Seal shall be installed according to Article 511 of the Standard Specifications. The cost of Concrete Seal shall be included in the cost of Mechanically Stabilized Earth Retaining Wall.

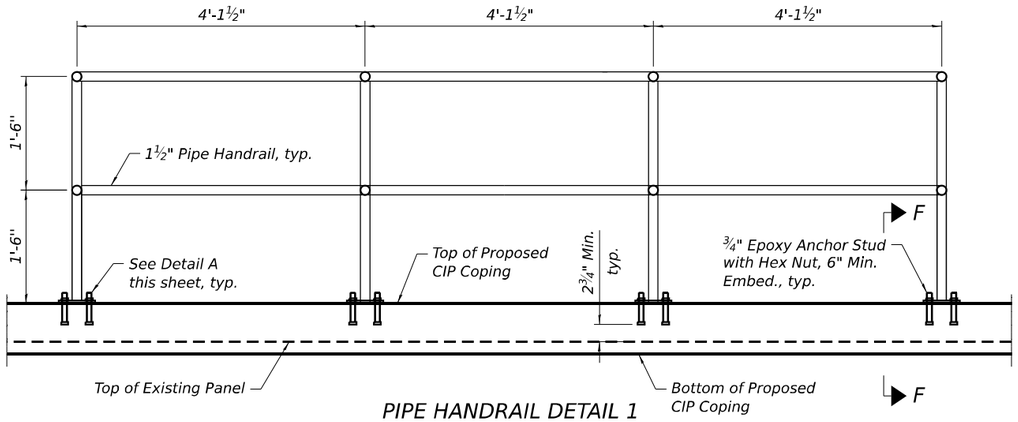

PIPE HANDRAIL DETAIL 1

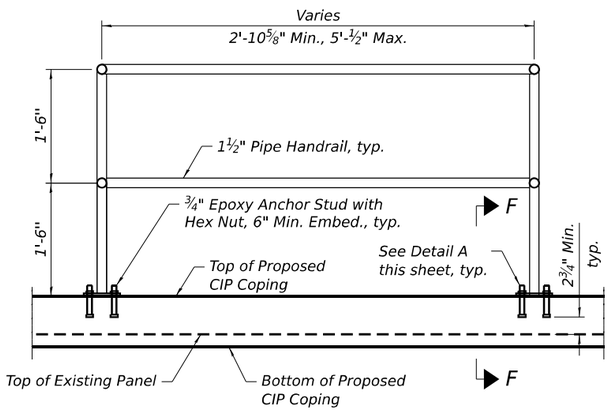

PIPE HANDRAIL DETAIL 2

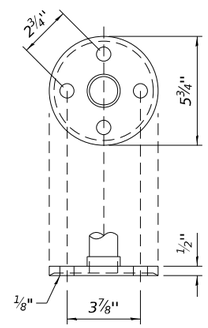

DETAIL A

(Cast iron or Structural Steel fitting)

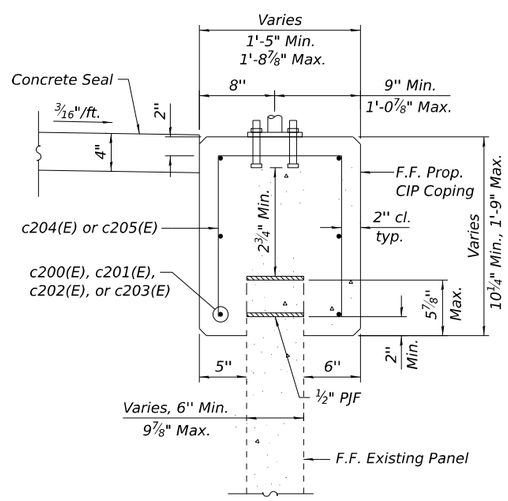

SECTION F-F

Pipe Handrail General Notes:

1. Article 509.04 of the Standard Specifications shall apply.

2. Connection of railing to posts shall be made by continuous welding or with using standard pipe fitting.

3. The pipe handrail shall be galvanized by the hot dip process.

Bar	'A'
a200(E)	13'-1"
a206(E)	10'-9"
a208(E)	11'-7"
a210(E)	12'-2"
a214(E)	11'-1"
a216(E)	10'-5"
a218(E)	9'-7"
a224(E)	7'-1"

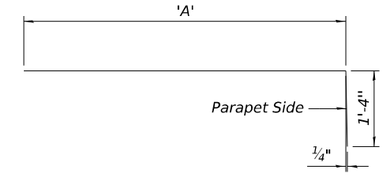

BAR BENDING DIAGRAM

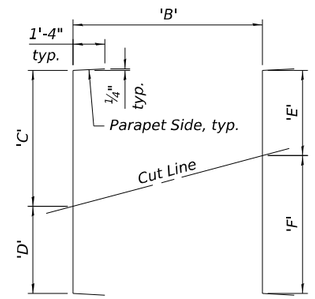

FIELD CUTTING DIAGRAM

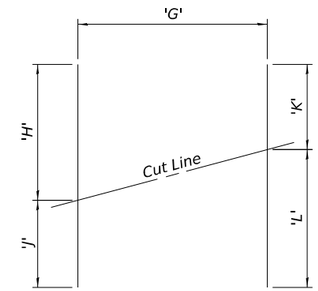

FIELD CUTTING DIAGRAM

'B'	'C'	'D'	'E'	'F'
17-#5 a202(E)	13'-1"	11'-10"	12'-5"	12'-6"
17-#5 a204(E)	11'-10"	10'-9"	11'-3"	11'-4"
17-#5 a220(E)	9'-6"	8'-3"	8'-10"	8'-11"
17-#5 a222(E)	8'-3"	7'-1"	7'-8"	7'-8"

'G'	'H'	'J'	'K'	'L'
17-#5 a203(E)	12'-1"	10'-10"	11'-5"	11'-6"
17-#5 a205(E)	10'-10"	9'-9"	10'-3"	10'-4"
15-#5 a212(E)	13'-11"	12'-11"	13'-5"	13'-5"
15-#5 a213(E)	11'-2"	10'-2"	10'-8"	10'-8"
17-#5 a221(E)	8'-6"	7'-3"	7'-10"	7'-11"
17-#5 a223(E)	7'-3"	6'-1"	6'-8"	6'-8"

WALL 1
BILL OF MATERIAL

Bar	No.	Size	Length	Shape
a200(E)	70	#5	14'-5"	
a201(E)	70	#5	12'-1"	
a202(E)	17	#5	27'-7"	
a203(E)	17	#5	22'-11"	
a204(E)	17	#5	25'-3"	
a205(E)	17	#5	20'-7"	
a206(E)	1	#5	12'-1"	
a207(E)	1	#5	9'-8"	
a208(E)	1	#5	12'-11"	
a209(E)	1	#5	9'-8"	
a210(E)	1	#5	13'-6"	
a211(E)	1	#5	10'-4"	
a212(E)	15	#5	26'-10"	
a213(E)	15	#5	21'-4"	
a214(E)	1	#5	12'-5"	
a215(E)	1	#5	9'-2"	
a216(E)	1	#5	11'-9"	
a217(E)	1	#5	8'-6"	
a218(E)	1	#5	10'-11"	
a219(E)	1	#5	8'-6"	
a220(E)	17	#5	20'-5"	
a221(E)	17	#5	15'-9"	
a222(E)	17	#5	18'-0"	
a223(E)	17	#5	13'-4"	
a224(E)	135	#5	8'-5"	
a225(E)	135	#5	6'-1"	
a226(E)	8	#5	4'-0"	
b200(E)	84	#5	28'-1"	
b201(E)	28	#5	21'-9"	
b202(E)	2	#5	16'-9"	
b203(E)	2	#5	20'-1"	
b204(E)	2	#5	28'-1"	
b205(E)	2	#5	25'-7"	
b206(E)	2	#5	21'-9"	
b207(E)	38	#5	26'-6"	
b208(E)	20	#5	22'-1"	
b209(E)	2	#5	22'-8"	
b210(E)	2	#5	13'-5"	
b211(E)	4	#5	26'-5"	
b212(E)	2	#5	22'-9"	
b213(E)	2	#5	21'-1"	
b214(E)	2	#5	19'-1"	
b215(E)	32	#5	33'-6"	
b216(E)	16	#5	29'-8"	
c200(E)	12	#4	5'-0"	
c201(E)	6	#4	15'-3"	
c202(E)	6	#4	7'-7"	
c203(E)	6	#4	7'-5"	
c204(E)	24	#4	3'-11"	
c205(E)	4	#4	4'-3"	
d200(E)	377	#5	7'-0"	
d201(E)	377	#5	7'-5"	
d202(E)	3	#6	5'-3"	
d203(E)	6	#6	8'-11"	
e200(E)	8	#4	21'-2"	
e201(E)	8	#4	24'-3"	
e202(E)	20	#4	21'-9"	
e203(E)	8	#4	22'-8"	
e204(E)	20	#4	22'-1"	
e205(E)	12	#4	27'-3"	
e206(E)	8	#4	25'-8"	
e207(E)	28	#4	29'-8"	
e208(E)	8	#4	32'-8"	
Concrete Superstructure			Cu. Yd.	155.6
Reinforcement Bars, Epoxy Coated			Pound	22,550

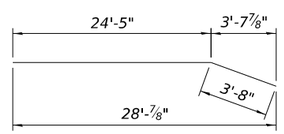

BAR b204(E)

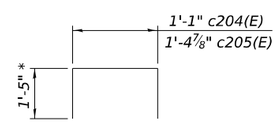

BARS c204(E) & c205(E)

* Bars to be cut in field to fit

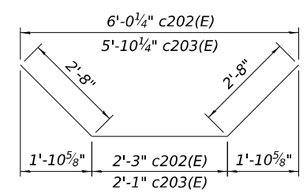

BARS c202(E) & c203(E)

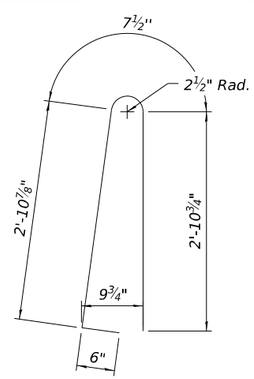

BAR d200(E)

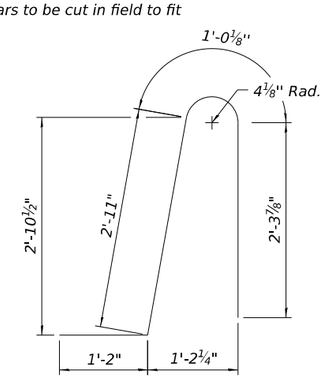

BAR d201(E)

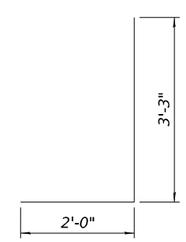

BARS d202(E)

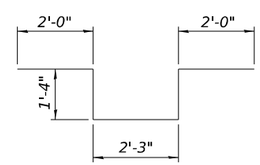

BAR d203(E)

MODEL: SHEET
FILE NAME: C:\TRANSYSTEMS\PW_LOCAL\TRANSYSTEMS-PW-01\DMS20862\099W801-62F94-008-DET05.DGN

10-27-2025, 16:55:41

HNTB

USER NAME =	DESIGNED - MVV	REVISED -	
	CHECKED - APC	REVISED -	
PLOT SCALE =	DRAWN - LK	REVISED -	
PLOT DATE =	CHECKED - MVV	REVISED -	

STATE OF ILLINOIS
DEPARTMENT OF TRANSPORTATION

WALL DETAILS 3
STRUCTURE NO. 099-W801 (EB)

SHEET SE-08 OF SE-10 SHEETS

F.A.I. RTE.	SECTION	COUNTY	TOTAL SHEETS	SHEET NO.
80	2017-057F	WILL	1342	908
		CONTRACT NO. 62F94		
		ILLINOIS	FED. AID PROJECT	

Geo Services, Inc.
Geotechnical, Environmental & Civil Engineering
805 Aintree Court, Suite 204
Naperville, Illinois 60563
(630) 355-2818

SOIL BORING LOG

GSI Job No. 13125
Page 1 of 1
Date 3/17/20

ROUTE F.A.I RTE. 80 DESCRIPTION I-80 Phase II (Near Term) LOGGED BY TZ
SECTION 2013-008B & 2013-009B LOCATION SW 1/4, SEC. 15, TWP. T35N, RNG. R10E, 3rd PM
COUNTY Will DRILLING METHOD Hollow Stem Auger/Rotary HAMMER TYPE CME Automatic

STRUCT. NO.
Station
BORING NO. RW-11
Station 715+85
Offset 58.50ft Right
Ground Surface Elev. 574.49 ft

Surface Water Elev. n/a ft
Stream Bed Elev. n/a ft
Groundwater Elev.:
First Encounter Dry to 10.0' ft
Upon Completion n/a ft
After Hrs. ft

Description	Elev.	DEPTH (ft)	BLOWS (/6")	UCS Qu (tsf)	MOIST (%)
3.0" ASPHALT, 12.0" CONCRETE	574.08				
CLAY LOAM-brown & gray-medium stiff to very stiff (Fill)			2		
			3	1.5	17
			7	P	
			2		
			3	1.6	16
		-5	3	B	
			4		
			5	3.0	19
			7	P	
			3		
			4	2.0	17
		-10	4	P	
			3		
			4	2.5	24
			5	P	
			4		
			6	1.0	18
		-15	8	P	
			4		
			5	2.0	19
			8	P	
			4		
			7	1.5	19
		-20	9	P	
CLAY LOAM-brown & gray-medium stiff to very stiff (Fill) *(continued)*			4		
			5	1.0	21
			6	P	
			4		
			5	0.5	16
		-25	5	P	
			5		
			7	0.5	18
			8	P	
			6		
			8	1.5	16
		-30	9	P	
			10		
			7		15
		-35	12		
			9		
			12	1.3	15
		-40	14	B	
End Of Boring @ -40.0'. Boring backfilled with cuttings	534.49				

The Unconfined Compressive Strength (UCS) Failure Mode is indicated by (B-Bulge, S-Shear, P-Penetrometer)
The SPT (N value) is the sum of the last two blow values in each sampling zone (AASHTO T206), GP-Geoprobe Hand Auger
BBS, from 137 (Rev. 8-99)

Geo Services, Inc.
Geotechnical, Environmental & Civil Engineering
805 Aintree Court, Suite 204
Naperville, Illinois 60563
(630) 355-2818

SOIL BORING LOG

GSI Job No. 13125
Page 1 of 1
Date 3/18/20

ROUTE F.A.I RTE. 80 DESCRIPTION I-80 Phase II (Near Term) LOGGED BY TZ
SECTION 2013-008B & 2013-009B LOCATION SW 1/4, SEC. 15, TWP. T35N, RNG. R10E, 3rd PM
COUNTY Will DRILLING METHOD Hollow Stem Auger/Rotary HAMMER TYPE CME Automatic

STRUCT. NO.
Station
BORING NO. RW-12
Station 716+65
Offset 56.70ft Right
Ground Surface Elev. 573.17 ft

Surface Water Elev. n/a ft
Stream Bed Elev. n/a ft
Groundwater Elev.:
First Encounter Dry to 10.0' ft
Upon Completion n/a ft
After Hrs. ft

Description	Elev.	DEPTH (ft)	BLOWS (/6")	UCS Qu (tsf)	MOIST (%)
12.0" ASPHALT, 12.0" CRUSHED STONE					
			3		
	571.17		4	3.5	2
CLAY LOAM-brown & gray-stiff to very stiff (Fill)			5	P	
			3		
			4	3.5	21
		-5	6	P	
			5		
			6	2.3	19
			24	B	
			3		
			4	2.5	16
		-10	6	P	
			16		
			1	1.5	20
			5	P	
			3		
			4	2.0	20
		-15	5	P	
			4		
			5	2.0	17
			8	P	
			3		
			5	2.5	18
		-20	7	P	
CLAY LOAM-brown & gray-stiff to very stiff (Fill) *(continued)*			3		
			4	3.5	2
			5	P	
			5		
			6	2.5	18
			6	P	
			6		
			7	3.0	18
		-25	7	P	
			5		
			6	2.5	16
			11	P	
			8		
			6	3.0	15
		-30	5	P	
			10		15
		-35	11		
			6		
			8	3.0	17
		-40	8	P	
End Of Boring @ -40.0'. Boring backfilled with cuttings	533.17				

The Unconfined Compressive Strength (UCS) Failure Mode is indicated by (B-Bulge, S-Shear, P-Penetrometer)
The SPT (N value) is the sum of the last two blow values in each sampling zone (AASHTO T206), GP-Geoprobe Hand Auger
BBS, from 137 (Rev. 8-99)

Geo Services, Inc.
Geotechnical, Environmental & Civil Engineering
805 Aintree Court, Suite 204
Naperville, Illinois 60563
(630) 355-2818

SOIL BORING LOG

GSI Job No. 13125
Page 1 of 1
Date 3/18/20

ROUTE F.A.I RTE. 80 DESCRIPTION I-80 Phase II (Near Term) LOGGED BY TZ
SECTION 2013-008B & 2013-009B LOCATION SW 1/4, SEC. 15, TWP. T35N, RNG. R10E, 3rd PM
COUNTY Will DRILLING METHOD Hollow Stem Auger/Rotary HAMMER TYPE CME Automatic

STRUCT. NO.
Station
BORING NO. RW-13
Station 717+44
Offset 59.90ft Right
Ground Surface Elev. 571.62 ft

Surface Water Elev. n/a ft
Stream Bed Elev. n/a ft
Groundwater Elev.:
First Encounter Dry to 10.0' ft
Upon Completion n/a ft
After Hrs. ft

Description	Elev.	DEPTH (ft)	BLOWS (/6")	UCS Qu (tsf)	MOIST (%)
12.0" ASPHALT, 12.0" CRUSHED STONE					
			15		
	569.62		6		
CLAY LOAM-brown & gray-medium stiff to hard (Fill)			10		
			5		
			8	4.5	
		-5	9	P	
			6		
			9	4.5	
			10	P	
			3		
			5		
		-10	7		
			3		
			4	1.5	
			6	P	
			3		
			4	1.5	
		-15	4	P	
			3		
			4	3.0	
			5	P	
			1		
			2	0.5	
		-20	4	P	
CLAY LOAM-brown & gray-medium stiff to hard (Fill) *(continued)*			3		
			3	1.0	
			4	P	
			3		
			3	1.5	
		-25	4	P	
			2		
			3	1.0	
			6	P	
			23		
			50/5"		
		-30			
			8		
			8	2.0	
		-35	9	P	
			5		
			6	0.9	
		-40	11	B	
End Of Boring @ -40.0'. Boring backfilled with cuttings	531.62				

The Unconfined Compressive Strength (UCS) Failure Mode is indicated by (B-Bulge, S-Shear, P-Penetrometer)
The SPT (N value) is the sum of the last two blow values in each sampling zone (AASHTO T206), GP-Geoprobe Hand Auger
BBS, from 137 (Rev. 8-99)

Notes:
1. For location of soil boring, see Sheet SE-01.

Z:\PROJECTS\2013\13125-HNTB_I-80 PHASE II (NEAR TERM)\13125 BORING LOGS\13125_LOG GP-J 4\4\20

MODEL: SHEET
FILE NAME: C:\TRANSYSTEMS\PW_LOCAL\TRANSYSTEMS-PW-01\D\M520862\099W801-62F94-009-BORING01.DGN

10-27-2025, 16:55:44

HNTB

USER NAME =	DESIGNED - MVV	REVISED -	
	CHECKED - APC	REVISED -	
PLOT SCALE =	DRAWN - LK	REVISED -	
PLOT DATE =	CHECKED - APC	REVISED -	

STATE OF ILLINOIS
DEPARTMENT OF TRANSPORTATION

SOIL BORINGS LOG 1
STRUCTURE NO. 099-W801 (EB)
SHEET SE-09 OF SE-10 SHEETS

F.A.I. RTE.	SECTION	COUNTY	TOTAL SHEETS	SHEET NO.
80	2017-057F	WILL	1342	909
		CONTRACT NO. 62F94		
		ILLINOIS	FED. AID PROJECT	

Geo Services, Inc.
Geotechnical, Environmental & Civil Engineering
805 Aintree Ct., Suite 204
Naperville, Illinois 60563
(630) 355-2848

SOIL BORING LOG

GSI Job No. 13125
Page 1 of 1
Date 3/18/20

ROUTE F.A.I RTE. 80 DESCRIPTION I-80 Phase II (Near Term) LOGGED BY TZ
SECTION 2013-008B & 2013-009B LOCATION SW 1/4, SEC. 15, TWP. T35N, RNG. R10E, 3rd PM
COUNTY Will DRILLING METHOD Hollow Stem Auger/Rotary HAMMER TYPE CME Automatic

STRUCT. NO.
Station
BORING NO. RW-14
Station 718+24
Offset 60.00ft Right
Ground Surface Elev. 570.14 ft

Surface Water Elev. n/a ft
Stream Bed Elev. n/a ft
Groundwater Elev.:
First Encounter Dry to 10.0' ft
Upon Completion n/a ft
After Hrs. ft

Description	Elev.	DEPTH (ft)	BLOWS (/6")	UCS Qu (tsf)	MOIST (%)
12.0" ASPHALT, 12.0" CRUSHED STONE					
			4		
	568.14		7	3.0	3
CLAY LOAM-brown & gray-medium stiff to hard (Fill)			9	P	
			4		
			5	2.5	14
		-5	6	P	
			4		
			5		13
			10		
			5		
			5		15
		-10	6		
			3		
			5		NR
			6		
			4		
			2	0.5	17
		-15	2	P	
			4		
			4	2.1	18
			6	P	
			2		
		-20	3	3.0	17
			3	P	

Description	Elev.	DEPTH (ft)	BLOWS (/6")	UCS Qu (tsf)	MOIST (%)
CLAY LOAM-brown & gray-medium stiff to hard (Fill) *(continued)*					
			4		
			5	2.0	20
			6	P	
			5		
			0		16
		-25	15		
			7		
			7	4.0	19
			8		
			9		
			15		18
		-30	14		
			8		
			9		15
		-35	15		
			7		
			8	3.0	20
		-40	14		
End Of Boring @ -40.0'. Boring backfilled with cuttings	530.14				

The Unconfined Compressive Strength (UCS) Failure Mode is indicated by (B-Bulge, S-Shear, P-Penetrometer)
The SPT (N value) is the sum of the last two blow values in each sampling zone (AASHTO T206), GP-Geoprobe Hand Auger
BBS, from 137 (Rev. 8-99)

Z:\PROJECTS\2013\13125-HNTB_I-80 PHASE II (NEAR TERM)\13125 BORING LOGS\13125_LOG GP-J 4\4\20

Geo Services, Inc.
Geotechnical, Environmental & Civil Engineering
805 Aintree Ct., Suite 204
Naperville, Illinois 60563
(630) 355-2848

SOIL BORING LOG

GSI Job No. 13125
Page 1 of 1
Date 3/23/20

ROUTE F.A.I RTE. 80 DESCRIPTION I-80 Phase II (Near Term) LOGGED BY TZ
SECTION 2013-008B & 2013-009B LOCATION SW 1/4, SEC. 15, TWP. T35N, RNG. R10E, 3rd PM
COUNTY Will DRILLING METHOD Hollow Stem Auger/Rotary HAMMER TYPE CME Automatic

STRUCT. NO.
Station
BORING NO. RW-15
Station 719+04
Offset 60.50ft Right
Ground Surface Elev. 567.99 ft

Surface Water Elev. n/a ft
Stream Bed Elev. n/a ft
Groundwater Elev.:
First Encounter Dry to 10.0' ft
Upon Completion n/a ft
After Hrs. ft

Description	Elev.	DEPTH (ft)	BLOWS (/6")	UCS Qu (tsf)	MOIST (%)
12.0" ASPHALT					
	566.99				
CLAY LOAM-brown & gray-stiff to hard (Fill)			3		
			4	3.5	18
			6	P	
			4		
			5	2.5	16
		-5	6	B	
			5		
			7	3.5	18
			11	P	
			6		
			7	3.0	21
		-10	7	P	
			5		
			8	2.0	19
			9	P	
			4		
			7	2.9	16
		-15	9	B	
			5		
			8	3.0	14
			13	P	
			4		
			5	2.5	15
		-20	7	P	

Description	Elev.	DEPTH (ft)	BLOWS (/6")	UCS Qu (tsf)	MOIST (%)
CLAY LOAM-brown & gray-stiff to hard (Fill) *(continued)*					
			3		
			4	3.5	19
			6	P	
			4		
			6	3.0	18
		-25	10	P	
			4		
			5	1.5	18
			8	P	
			6		
			8	4.5	18
		-30	15	P	
			4		
			7	4.5	18
		-35	11	P	
	530.99				
SILTY CLAY LOAM with GRAVEL-brown & gray-dense (Fill)			24		
End Of Boring @ -40.0'. Boring backfilled with cuttings	527.99	-40	23 21		6

The Unconfined Compressive Strength (UCS) Failure Mode is indicated by (B-Bulge, S-Shear, P-Penetrometer)
The SPT (N value) is the sum of the last two blow values in each sampling zone (AASHTO T206), GP-Geoprobe Hand Auger
BBS, from 137 (Rev. 8-99)

Z:\PROJECTS\2013\13125-HNTB_I-80 PHASE II (NEAR TERM)\13125 BORING LOGS\13125_LOG GP-J 4\4\20

Geo Services, Inc.
Geotechnical, Environmental & Civil Engineering
805 Aintree Ct., Suite 204
Naperville, Illinois 60563
(630) 355-2848

SOIL BORING LOG

GSI Job No. 13125
Page 1 of 1
Date 3/23/20

ROUTE F.A.I RTE. 80 DESCRIPTION I-80 Phase II (Near Term) LOGGED BY TZ
SECTION 2013-008B & 2013-009B LOCATION SW 1/4, SEC. 15, TWP. T35N, RNG. R10E, 3rd PM
COUNTY Will DRILLING METHOD Hollow Stem Auger/Rotary HAMMER TYPE CME Automatic

STRUCT. NO.
Station
BORING NO. RW-16
Station 719+82
Offset 60.50ft Right
Ground Surface Elev. 565.89 ft

Surface Water Elev. n/a ft
Stream Bed Elev. n/a ft
Groundwater Elev.:
First Encounter Dry to 10.0' ft
Upon Completion n/a ft
After Hrs. ft

Description	Elev.	DEPTH (ft)	BLOWS (/6")	UCS Qu (tsf)	MOIST (%)
12.0" ASPHALT					
	564.89				
CLAY LOAM-brown & gray-stiff to hard (Fill)			3		
			4	2.0	22
			5	B	
			3		
			4	3.5	21
		-5	4	P	
			3		
			4	2.2	13
			5	B	
			3		
			7	1.8	16
		-10	8	B	
			4		
			8	2.5	14
			11	P	
			6		
			9	3.5	16
		-15	10	P	
			6		
			6	1.2	19
			8	B	
			7		
		-20	9	4.5	15
			14	P	

Description	Elev.	DEPTH (ft)	BLOWS (/6")	UCS Qu (tsf)	MOIST (%)
CLAY LOAM-brown & gray-stiff to hard (Fill) *(continued)*					
			8		
			9	4.5	18
			15	P	
			8	3.5	17
		-25	14	P	
			6		
			8	2.0	20
			12	P	
			6		
			9	2.5	14
		-30	13	P	
			10		
			12	3.0	17
		-35	15	P	
			10		
	528.89				
CLAY LOAM with GRAVEL-brown, gray & black-medium dense (Fill)			11		
End Of Boring @ -40.0'. Boring backfilled with cuttings	525.89	-40	10 9		14

The Unconfined Compressive Strength (UCS) Failure Mode is indicated by (B-Bulge, S-Shear, P-Penetrometer)
The SPT (N value) is the sum of the last two blow values in each sampling zone (AASHTO T206), GP-Geoprobe Hand Auger
BBS, from 137 (Rev. 8-99)

Z:\PROJECTS\2013\13125-HNTB_I-80 PHASE II (NEAR TERM)\13125 BORING LOGS\13125_LOG GP-J 4\4\20

Notes:
1. For location of soil boring, see Sheet SE-01.

MODEL: SHEET
FILE NAME: C:\TRANSYSTEMS\PW_LOCAL\TRANSYSTEMS-PW-01\D\M520862\099W801-62F94-010-BORING02.DGN

HNTB

USER NAME =	DESIGNED - MVV	REVISED -	
	CHECKED -	REVISED -	
PLOT SCALE =	DRAWN - LK	REVISED -	
PLOT DATE =	CHECKED - APC	REVISED -	

STATE OF ILLINOIS
DEPARTMENT OF TRANSPORTATION

SOIL BORING LOGS 2
STRUCTURE NO. 099-W801 (EB)

SHEET SE-10 OF SE-10 SHEETS

F.A.I. RTE.	SECTION	COUNTY	TOTAL SHEETS	SHEET NO.
80	2017-057F	WILL	1342	910
		CONTRACT NO. 62F94		
	ILLINOIS	FED. AID PROJECT		

10-27-2025, 16:55:48

Benchmark: Iron Rod with Cap Sta. 67+63.19, 388.39' RT
N 1,764,330.037 and E 1,052,698.888
Elev.= 550.720

Existing Structures: None.

Traffic Control: EB I-80 traffic to Chicago St. will be detoured to the east at Richards St.

Salvage: None.

∗ Measured along F.F. of Wall/Panels

∗∗ See note 3

NOTES:

1. Stations and offsets are measured from the ℄ of Ramp A to the front face of precast panels.
2. For General Notes, Index of Sheets, Profile Grade Line, Curve Data and Total Bill of Material, see Sheet SF-02.
3. For Table 1 - Wall Elevations 7A, Typical Section thru Wall, see Sheet SF-03.

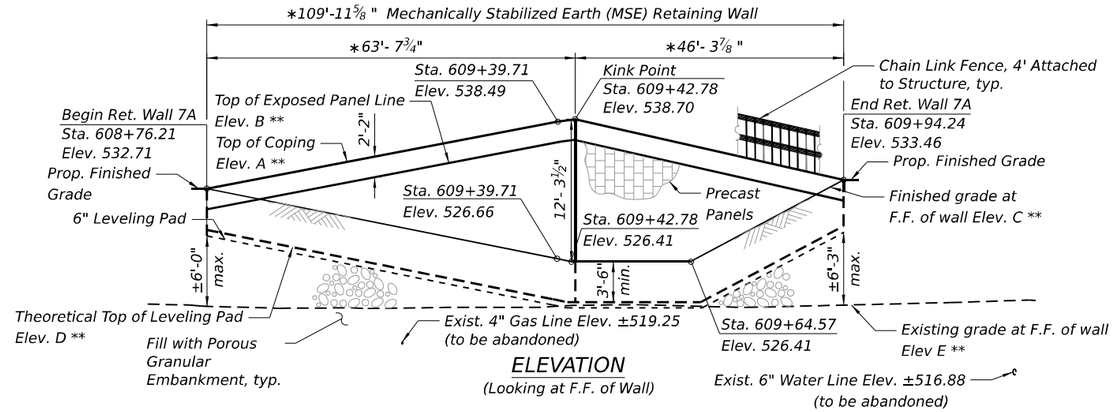

ELEVATION
(Looking at F.F. of Wall)

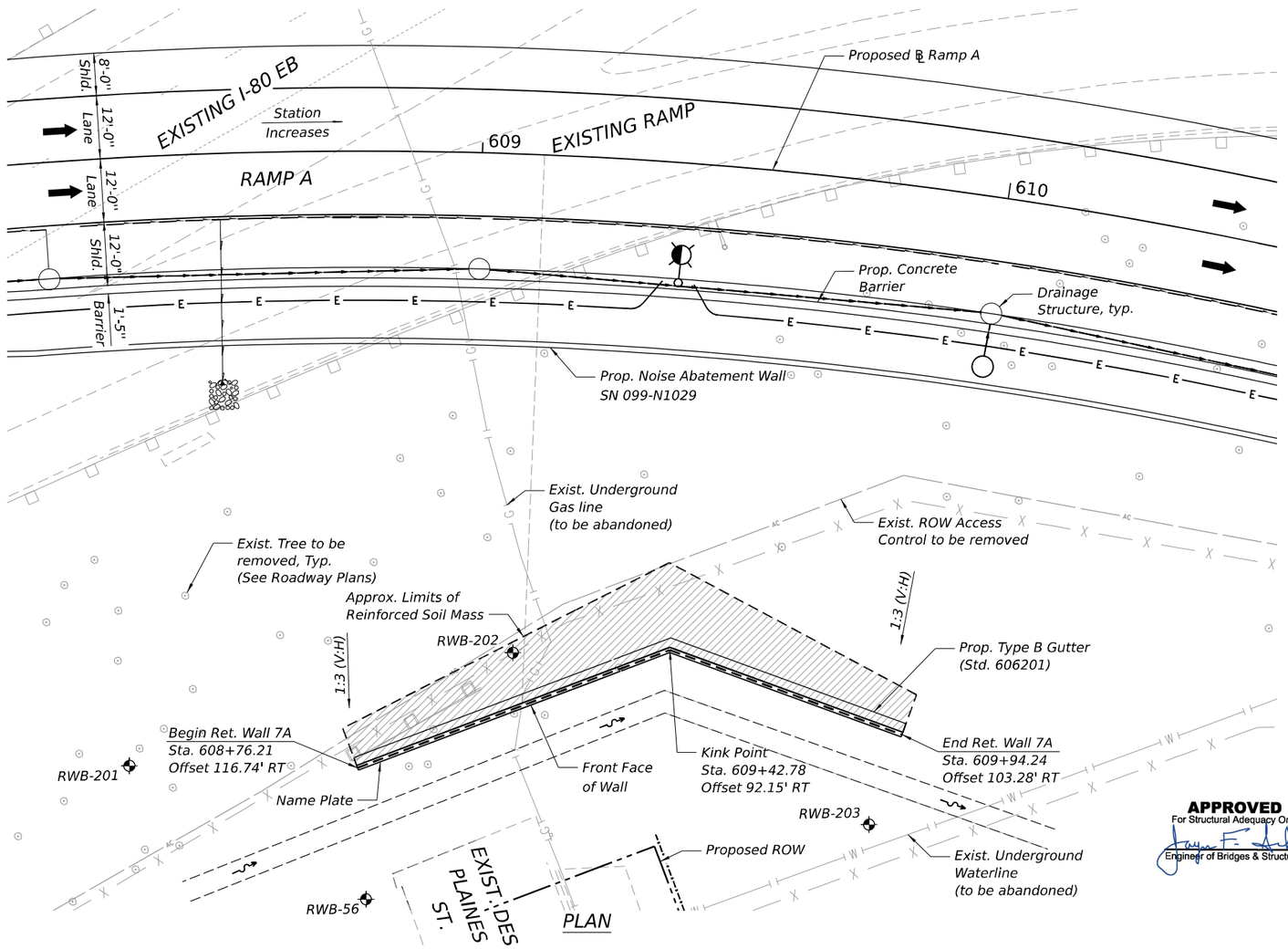

PLAN

LEGEND

- Soil Boring
- Exist. Underground Gasline
- Exist. Underground Waterline
- Exist. ROW Access Control
- Exist. ROW
- Prop. ROW
- Prop. Underground Electric
- Prop. Storm Sewer
- Prop. Pipe Underdrain
- F.F. Front Face
- B.F. Back Face
- Proposed Ditch
- Approx. Limits of Reinforced Soil Mass
- Existing Tree

DESIGN STRESSES

PRECAST UNITS

f'c = 4,500 psi

FIELD UNITS

f'c = 3,500 psi
fy = 60,000 psi (Reinforcement)

DESIGN SPECIFICATIONS

2020 AASHTO LRFD Bridge Design Specifications, 9th Edition

Range 10E, 3 P.M.

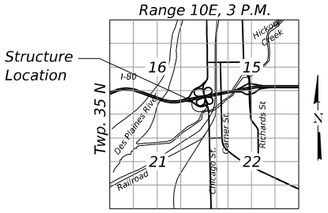

LOCATION SKETCH

LICENSED STRUCTURAL ENGINEER
RYAN R DOERRER
081-007941
STATE OF ILLINOIS

Date: 10-31-2025
Expires: 11-30-2026

APPROVED
For Structural Adequacy Only
Engineer of Bridges & Structures

GENERAL PLAN AND ELEVATION
RETAINING WALL 7A ALONG RAMP A
F.A.I. RTE. 80 - SEC. 2017-057F
WILL COUNTY
STA. 608+76.21 TO STA. 609+94.24
STRUCTURE NO. 099-W126

MODEL: Default
FILE NAME: 099W126-62F94-SF-01-GPE.dgn

SEB
1111 BURLINGTON AVE., SUITE 111 - LISLE, IL 60532
(630) 641-9900

USER NAME = jsandoval	DESIGNED - JSS	REVISED -	
	CHECKED - RRD	REVISED -	
PLOT SCALE = 0:0.1667 ':' / in.	DRAWN - TCK	REVISED -	
PLOT DATE = 10/28/2025	CHECKED - RRD	REVISED -	

STATE OF ILLINOIS
DEPARTMENT OF TRANSPORTATION

SHEET SF-01 OF SF-07 SHEETS

F.A.I. RTE.	SECTION	COUNTY	TOTAL SHEETS	SHEET NO.
80	2017-057F	WILL	1342	911

CONTRACT NO. 62F94
ILLINOIS FED. AID PROJECT

10/28/2025 9:49:26 AM

GENERAL NOTES:

1. Reinforcement bars designated (E) shall be epoxy coated.
2. Cast-in-place concrete and reinforcement steel required for coping shall be included in the payment for Mechanical Stabilized Earth Retaining wall.
3. All Exposed concrete edges shall have a ¾" x 45° chamfer, except where shown otherwise. Chamfer on vertical edges shall be continued a minimum of one foot below the finished ground level
4. Protective Coat shall be applied to the exposed faces of the cast-In-place coping.
5. The Contractor shall field verify locations of existing underground utilities prior to beginning work. Existing utilities in conflict with retaining wall construction shall be abandoned or relocated according to the directions given on the Civil Plans. The Contractor shall take all necessary precautions to protect existing utilities to remain during all stages of construction. Any damage to the existing utilities to remain caused by the Contractor in the performance of the work shall be repaired by the Contractor, to the satisfaction of the Engineer, at no cost to the Department.
6. Stations and offsets are measured along the baseline of the Chicago Street Ramp A to the front face of precast panels.
7. Porous Granular Embankment shall be placed and compacted to a minimum of 95% of the maximum dry density in accordance with IDOT standard construction requirements at locations where the proposed theoretical top of leveling pad is above the existing ground line.

INDEX OF SHEETS

TOTAL BILL OF MATERIAL

ITEM	UNIT	TOTAL
Structure Excavation	Cu Yd	9
Protective Coat	Sq Yd	46
Name Plates	Each	1
Mechanically Stabilized Earth Retaining Wall	Sq Ft	913
Porous Granular Embankment	Cu Yd	175
Chain Link Fence, 4' Attached to Structure	Foot	110

SUGGESTED SEQUENCE OF CONSTRUCTION

1. Place Porous Granular Embankment in areas where the bottom of the proposed leveling pad is at higher elevation than the existing ground.
2. Excavate existing ground where required and build MSE wall leveling pad.
3. Compact Porous Granular Embankment before placing MSE wall leveling pad.
4. Construct leveling pad and place MSE wall to the required elevation.
5. Construct cast in place concrete coping.
6. Grade remaining finish grade slope to meet proposed roadway.

PR RAMP A CURVE 1

P.I. Sta. = 609+86.44
Δ = 23°33'18"
D = 06°51'42"
R = 835.00'
T = 174.10'
L = 343.28'
E = 17.96'
e = 6.0%
P.C. Sta. = 608+12.34
P.T. Sta. = 611+55.62

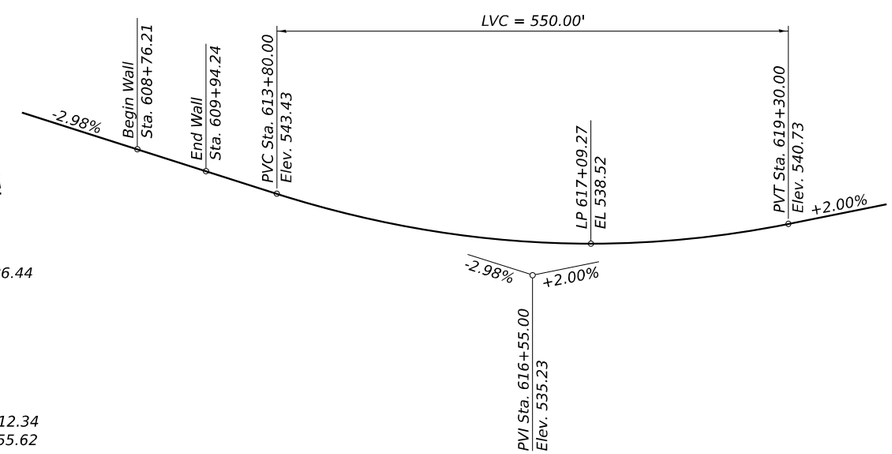

RAMP A PROFILE GRADE

(Along Prop. ℄ Ramp A)

STA. 608+76.21 TO 609+94.24
BUILT 20-- BY
STATE OF ILLINOIS
F.A.I. Rt. 80 Sec. 2017-057F
LOADING HL-93
STR. NO. 099-W126

NAME PLATE

See Std. 515001

MODEL: Default
FILE NAME: 099W126-62F94-SF-02-GenNotes and BOM.dgn

SEB
1111 BURLINGTON AVE., SUITE 111 - LISLE, IL 60532
(630) 641-9900

USER NAME = jsandoval	DESIGNED - JSS	REVISED -	
	CHECKED - RRD	REVISED -	
PLOT SCALE = 0:1.9999 ':" / in.	DRAWN - TCK	REVISED -	
PLOT DATE = 10/28/2025	CHECKED - RRD	REVISED -	

STATE OF ILLINOIS
DEPARTMENT OF TRANSPORTATION

GENERAL DATA
STRUCTURE NO. 099-W126
SHEET SF-02 OF SF-07 SHEETS

F.A.I. RTE.	SECTION	COUNTY	TOTAL SHEETS	SHEET NO.
80	2017-057F	WILL	1342	912

CONTRACT NO. 62F94
ILLINOIS FED. AID PROJECT

10/28/2025 9:49:39 AM

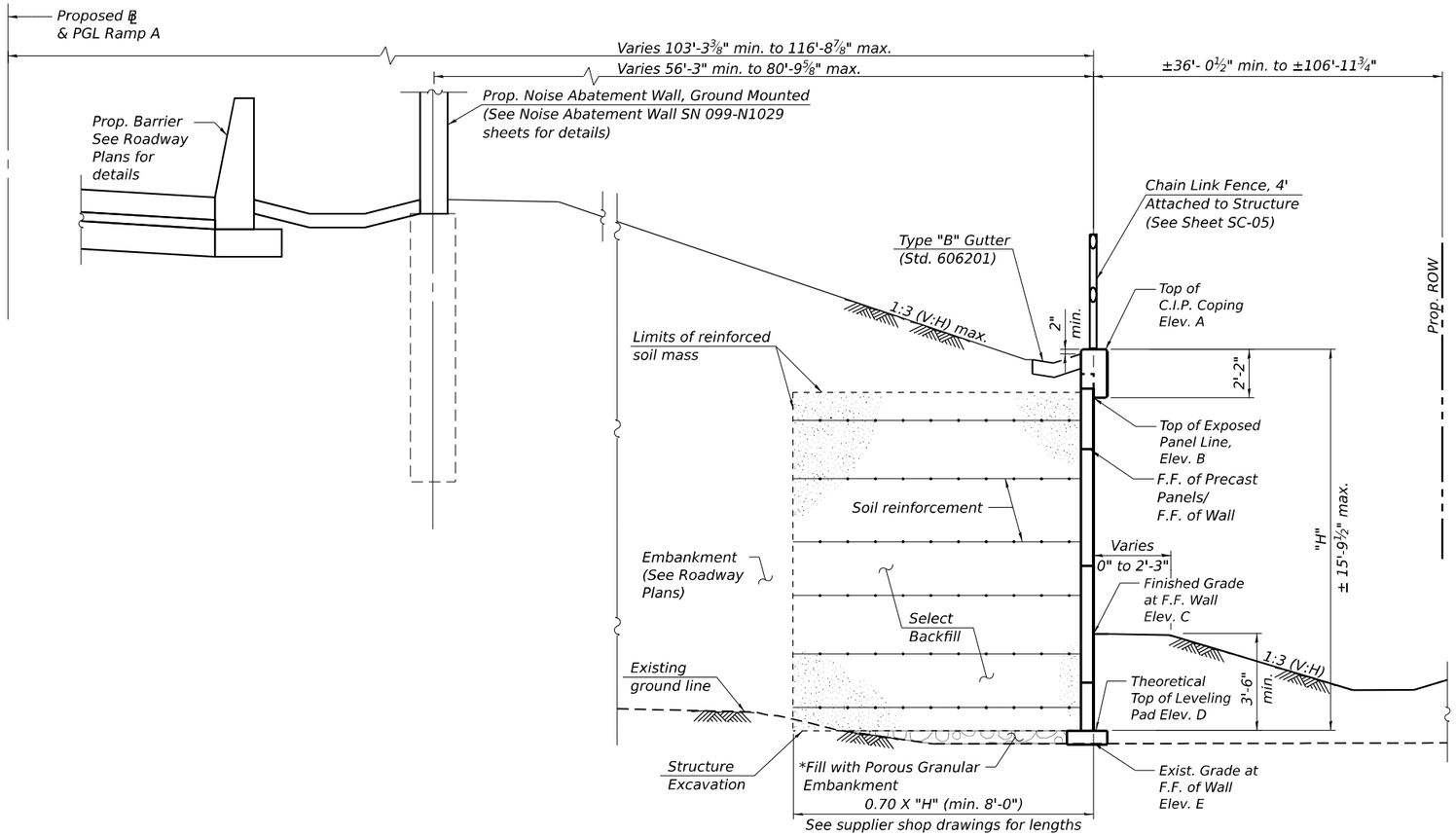

TYPICAL WALL SECTION

(Looking East)

∗ Required at all locations where top of leveling pad is above the existing ground line

TABLE 1- WALL ELEVATIONS 7A

Station	Offset from ℄ Ramp A	A Top of C.I.P. Coping	B Top of Exposed Panel Line	C Finished Grade at F.F. of Wall	D Theoretical Top of Leveling Pad	E Exist. Grade at F.F. Wall
608+76.21	116.74' Rt.	532.71	530.54	532.71	529.21	522.54
608+80.00	115.50' Rt.	533.05	530.89	532.36	528.86	522.50
609+00.00	108.63' Rt.	534.88	532.71	530.50	527.00	522.42
609+20.00	101.28' Rt.	536.70	534.53	528.60	525.10	522.45
609+39.71	93.42' Rt.	538.49	536.32	526.66	523.16	522.55
609+40.00	93.30' Rt.	538.51	536.34	526.71	523.21	522.56
609+42.78	95.15' Rt.	538.70	536.53	526.41	522.91	522.64
609+60.00	96.23' Rt.	536.95	534.78	526.43	522.93	522.64
609+64.57	97.25' Rt.	536.48	534.31	526.41	522.91	522.58
609+80.00	100.51' Rt.	534.91	532.74	530.30	526.80	522.50
609+94.23	103.28' Rt.	533.46	531.29	533.46	529.96	522.63

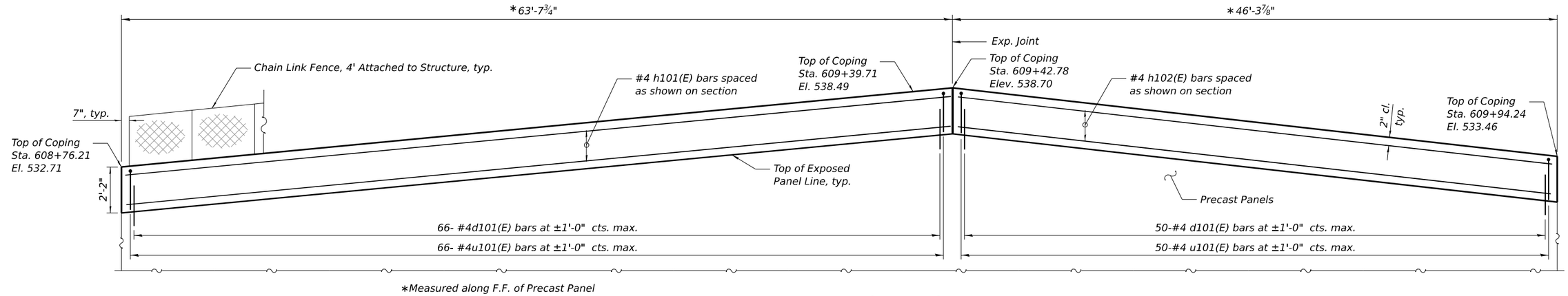

*Measured along F.F. of Precast Panel

ELEVATION - UNFOLDED

(Looking North)

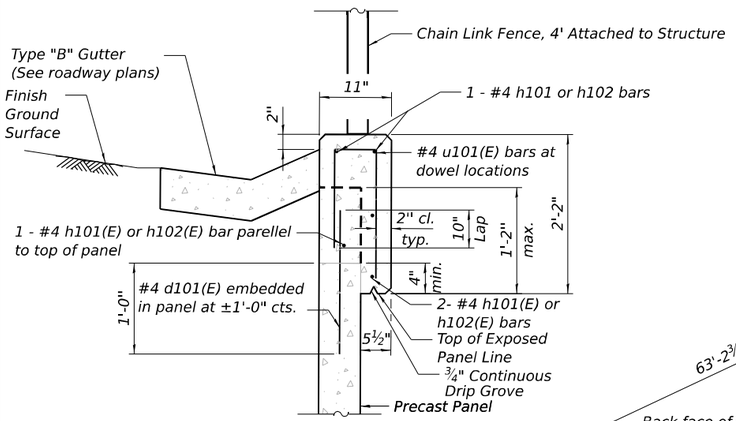

COPING DETAIL

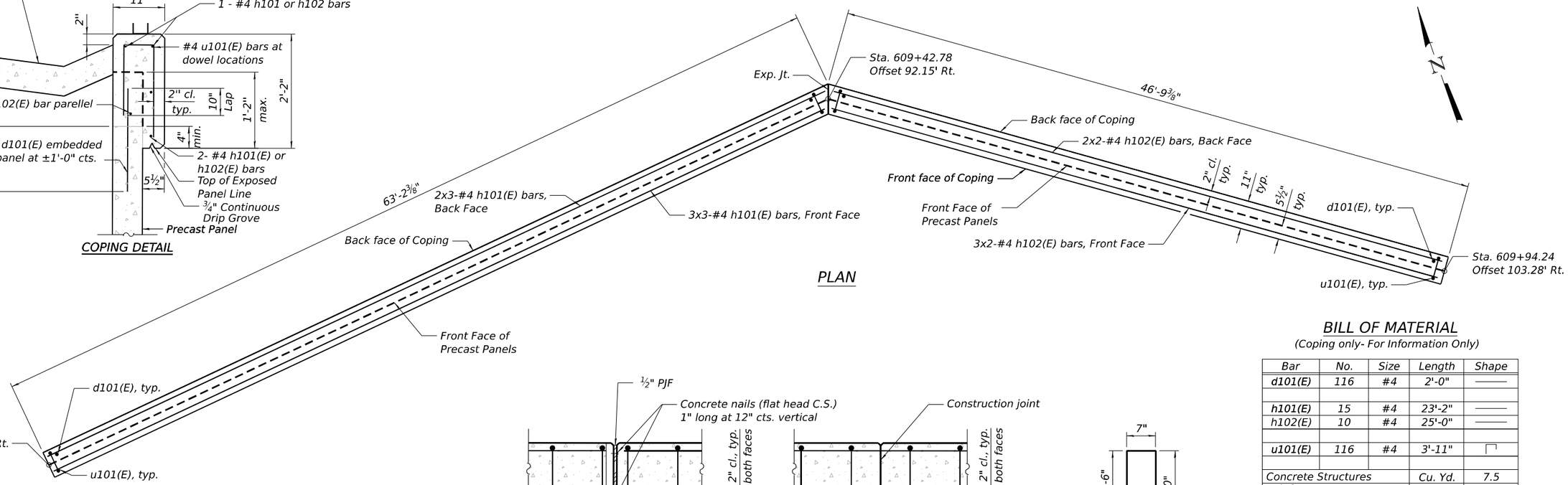

PLAN

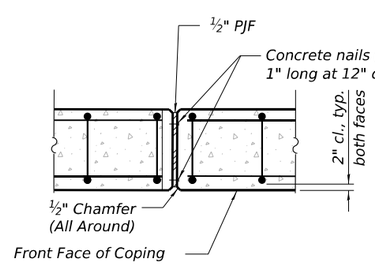

Coping Expansion Joint - PLAN

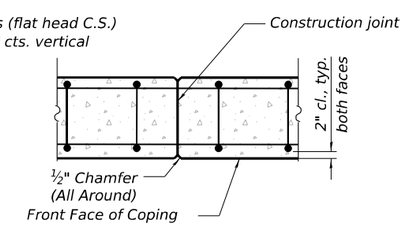

Coping Construction Joint - PLAN

(Provide construction joints at 30'-0" max. and 20'-0" min.)

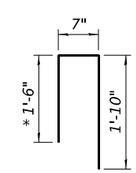

BAR u101(E)

* cut bar to fit

BILL OF MATERIAL

(Coping only- For Information Only)

Bar	No.	Size	Length	Shape
d101(E)	116	#4	2'-0"	———
h101(E)	15	#4	23'-2"	———
h102(E)	10	#4	25'-0"	———
u101(E)	116	#4	3'-11"	⊓
Concrete Structures			Cu. Yd.	7.5
Reinforcement Bars, Epoxy Coated			Pound	860

MIN. LAP LENGTH

#4 Bar = 2'-11"

Notes:

1. Bars noted thus, 3x2-#5 indicates 3 lines of bars with 2 lengths of bar per line.
2. For control point station, offset, and elevations, see Sheet SF-03.
3. For Typical Section, see Sheet SF-03.
4. The cost of the concrete and the reinforcement steel required for the coping shall be included in the cost of Mechanically Stabilized Earth Retaining Wall.
5. For coping construction joint spacing requirements see Coping Construction Joint - Plan Detail.

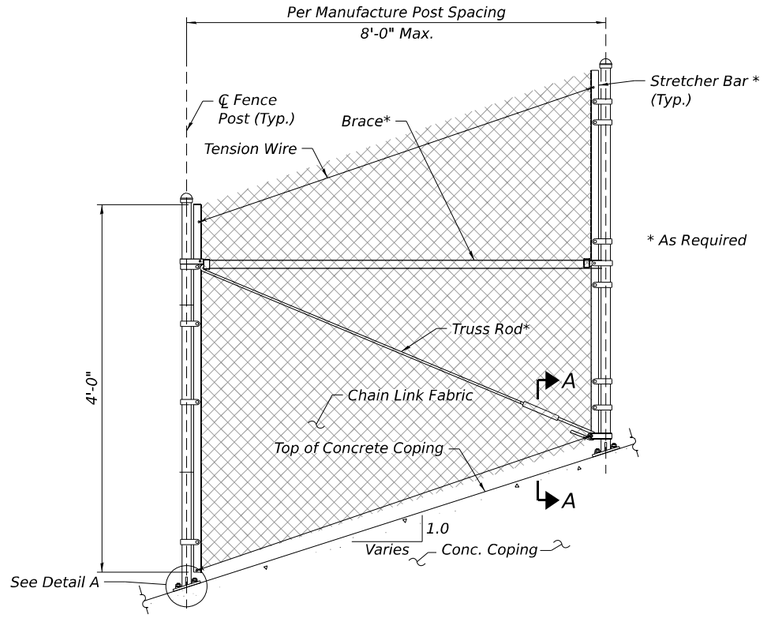

CHAIN LINK FENCE ELEVATION

(Along top of Concrete Coping)

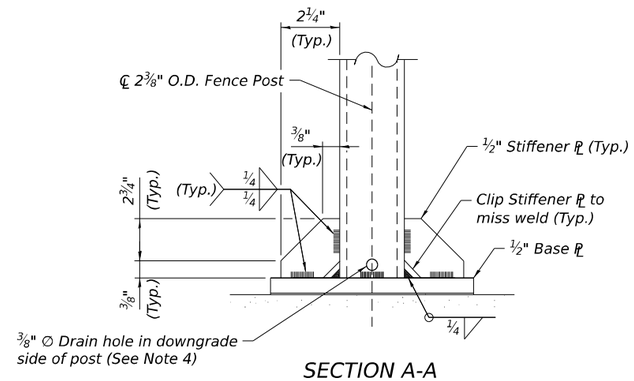

SECTION A-A

(Fence Post base plate connection)

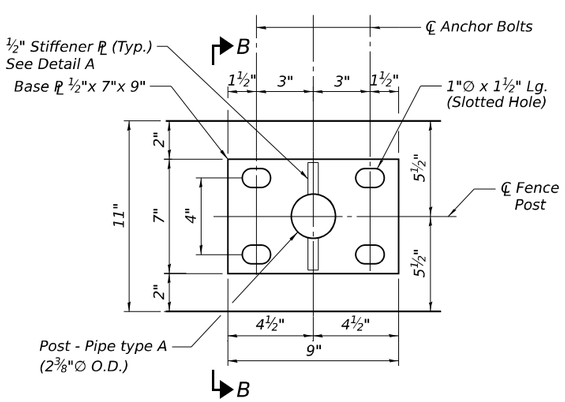

Base PL

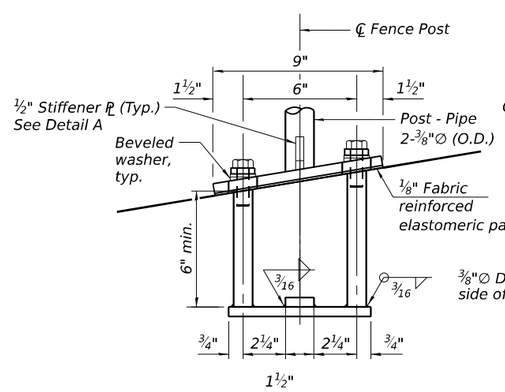

Detail A

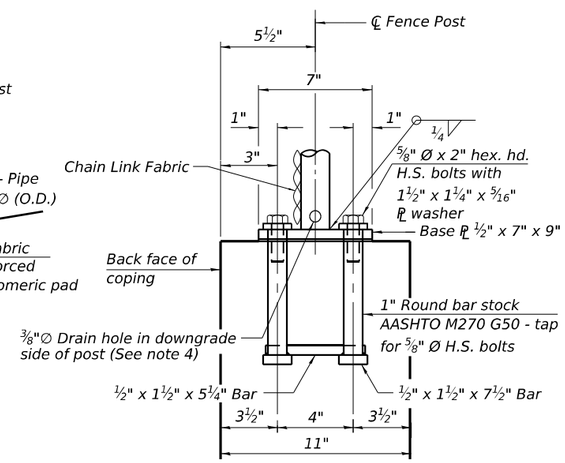

SECTION B-B

(Stiffener not shown for clarity)

NOTES:

1. See IDOT Highway Standard Drawing 664001-02 for additional fence details.
2. Fence shall be continuous over concrete coping expansion joints.
3. At all fence locations, the end posts shall be 7" from the the coping expansion joint and ends.
4. Drill Drain hole to miss fillet weld and prior to galvanizing. Hole shall be drilled as close to the weld as possible.
5. Edge distance from a construction or expansion joint in the proposed copings to an expansion anchor shall be per manufacturer's specifications.
6. For CIP Concrete coping details see sheet SF-04.
7. Place reinforcement bars to miss anchor rod locations.
8. All heavy hex nuts shall be according to ASTM A 563 grade DH.
9. All fully threaded anchor rods shall be ASTM F1554 grade 105.
10. The post base plate shall be fastened to the top of the cast in place coping snug tight and given an additional ⅛" turn.

BASE PLATE NOTES:

A. Base Plates shall be fabricated from material meeting the requirements of AASHTO M270 Grade 50.

B. Base Plates and Posts shall be Hot Dipped Galvanized after fabrication in accordance with AASHTO M111.

C. All fabrication shall be per Article 505.04 of the Standard Specifications.

D. All bolts, nuts, washers and anchors shall be galvanized according to AASHTO M 232.

ANCHORAGE ASSEMBLY

In lieu of the cast-in-place anchor device shown, the Contractor has the option of drilling and setting ⅝" Ø fully threaded anchor rods with the same plate washers as specified above and heavy hex lock nuts according to Article 509.06 of the Standard Specifications. Embedment shall be according to the manufacturer's specifications.

BILL OF MATERIAL

Item	Unit	Quantity
Chain Link Fence, 4' Attached to Structure	Foot	110

Illinois Department of Transportation
Division of Highways
GSG Consultants, Inc.

SOIL BORING LOG

Page 1 of 1

Date 10/28/22

ROUTE I-80 DESCRIPTION Retaining Wall No. 7 - Ramp A LOGGED BY AA

SECTION C-91-109-22 LOCATION , SEC. 16, TWP. 35 N, RNG. 10 E,
Latitude , Longitude

COUNTY Will DRILLING RIG Mobile B-57 HAMMER TYPE Auto
DRILLING METHOD HSA HAMMER EFF (%) 89

STRUCT. NO.
Station

BORING NO. RWB-56
Station 608+94.47
Offset 148.70ft RT
Ground Surface Elev. 522.58 ft

Surface Water Elev. N/A ft
Stream Bed Elev. N/A ft

Groundwater Elev.:
First Encounter Dry ft
Upon Completion N/A ft
After ___ Hrs. N/A ft

Description	Elev.	DEPTH (ft)	BLOWS (/6")	UCS Qu (tsf)	MOIST (%)
4 inches of Asphalt	522.25				
8 inches of Aggregate Subbase	521.58				
Medium Dense Dark Brown and Gray, Moist GRAVEL, with sand, trace clay seams (GPS)	519.08		5 15 8		12
Stiff Dark Brown, Moist SILTY CLAY, with gravel (CL/ML)	516.58	-5	2 2 2	1.0 P	20
Medium Dense to Very Dense Brown, Dry to Moist GRAVEL, trace sand and clay seams (GP)	513.08		2 6 6 16		15
WEATHERED LIMESTONE	512.58	-10	50/4"		3
Gray LIMESTONE, slightly weathered, moderately fractured Run 1: 10' - 15' Recovery: 92% RQD: 52% (Fair)	507.58	-15			
Run 2: 15' - 20' Recovery: 100% RQD: 75% (Good)	502.58	-20			

End of Boring

The Unconfined Compressive Strength (UCS) Failure Mode is indicated by (B-Bulge, S-Shear, P-Penetrometer)
The SPT (N value) is the sum of the last two blow values in each sampling zone (AASHTO T206)

BBS, form 137 (Rev. 8-99)

Illinois Department of Transportation
Division of Highways
GSG Consultants

SOIL BORING LOG

Page 1 of 1

Date 3/19/25

ROUTE I-80 DESCRIPTION Retaining Wall No. 7 - Ramp A LOGGED BY SB

SECTION C-91-109-22 LOCATION , SEC. 16, TWP. 35 N, RNG. 10 E,
Latitude 41.5108154, Longitude -88.0855262

COUNTY Will DRILLING RIG Mobile B-57 HAMMER TYPE Auto
DRILLING METHOD HSA HAMMER EFF (%) 92.1

STRUCT. NO.
Station

BORING NO. RWB-201
Station 608+39.28
Offset 142.44ft RT
Ground Surface Elev. 524.49 ft

Surface Water Elev. N/A ft
Stream Bed Elev. N/A ft

Groundwater Elev.:
First Encounter Dry ft
Upon Completion N/A ft
After ___ Hrs. N/A ft

Description	Elev.	DEPTH (ft)	BLOWS (/6")	UCS Qu (tsf)	MOIST (%)
4 inches of Topsoil	524.15				
Stiff Brown, Moist SILTY CLAY, little gravel, trace roots (CL/ML)	520.49		3 4 2 3	1.0 P	
Medium Dense to Dense Gray, Moist GRAVEL (GP)	516.49	-5	12 31 7 15 8	1.0 P	
Light Gray, Moist WEATHERED LIMESTONE	515.49				
Auger refusal at 9 feet End of Boring		-10 -15 -20			

The Unconfined Compressive Strength (UCS) Failure Mode is indicated by (B-Bulge, S-Shear, P-Penetrometer)
The SPT (N value) is the sum of the last two blow values in each sampling zone (AASHTO T206)

BBS, form 137 (Rev. 8-99)

MODEL: Default
FILE NAME: 099W126-62F94-SF-06-Boring Log 1.dgn

SEB
1111 BURLINGTON AVE., SUITE 111 - LISLE, IL 60532
(630) 641-9600

USER NAME = jsandoval	DESIGNED - JSS	REVISED -	
	CHECKED - RRD	REVISED -	
PLOT SCALE = 0:1.9999 ':" / in.	DRAWN - TCK	REVISED -	
PLOT DATE = 10/28/2025	CHECKED - RRD	REVISED -	

STATE OF ILLINOIS
DEPARTMENT OF TRANSPORTATION

BORING LOGS 1 (1 OF 2)
STRUCTURE NO. 099-W126

SHEET SF-06 OF SF-07 SHEETS

F.A.I. RTE.	SECTION	COUNTY	TOTAL SHEETS	SHEET NO.
80	2017-057F	WILL	1342	916

CONTRACT NO. 62F94

ILLINOIS FED. AID PROJECT

10/28/2025 9:50:31 AM

Illinois Department of Transportation
Division of Highways
GSG Consultants

SOIL BORING LOG

Page 1 of 1

Date 3/20/25

ROUTE I-80 DESCRIPTION Retaining Wall No. 7 - Ramp A LOGGED BY AGK

SECTION C-91-109-22 LOCATION SEC. 16, TWP. 35 N, RNG. 10 E,
Latitude 41.5108016, Longitude -88.0851979

COUNTY Will DRILLING RIG Diedrich D-50 ATV HAMMER TYPE Auto
DRILLING METHOD HSA HAMMER EFF (%) 94.6

STRUCT. NO.
Station

BORING NO. RWB-202
Station 609+41.29
Offset 116.17ft RT
Ground Surface Elev. 524.04 ft

Surface Water Elev. N/A ft
Stream Bed Elev. N/A ft

Groundwater Elev.:
First Encounter Dry ft
Upon Completion N/A ft
After ___ Hrs. N/A ft

Description	Elev.	DEPTH (ft)	BLOWS (/6")	UCS Qu (tsf)	MOIST (%)
3 inches of Topsoil	~~523.79~~				
Dark Brown, Moist FILL: SILTY CLAY, some debris, trace gravel			5		
			7 9		
			7		
			6 6		
		-5			
WEATHERED LIMESTONE	518.04		16		
			17 18		
Auger refusal at 8.5 feet	515.54		8		
Light Gray LIMESTONE, slightly weathered, moderately fractured			50/1"		
		-10			
Run 1: 8.5' - 18.5' Recovery: 100% RQD: 92.5% (Excellent)					
		-15			
End of Boring	505.54				
		-20			

The Unconfined Compressive Strength (UCS) Failure Mode is indicated by (B-Bulge, S-Shear, P-Penetrometer)
The SPT (N value) is the sum of the last two blow values in each sampling zone (AASHTO T206)

BBS, form 137 (Rev. 8-99)

Illinois Department of Transportation
Division of Highways
GSG Consultants

SOIL BORING LOG

Page 1 of 1

Date 3/19/25

ROUTE I-80 DESCRIPTION Retaining Wall No. 7 - Ramp A LOGGED BY SB

SECTION C-91-109-22 LOCATION SEC. 16, TWP. 35 N, RNG. 10 E,
Latitude 41.5107362, Longitude -88.0850919

COUNTY Will DRILLING RIG Mobile B-57 HAMMER TYPE Auto
DRILLING METHOD HSA HAMMER EFF (%) 92.1

STRUCT. NO.
Station

BORING NO. RWB-203
Station 609+83.82
Offset 125.44ft RT
Ground Surface Elev. 524.42 ft

Surface Water Elev. N/A ft
Stream Bed Elev. N/A ft

Groundwater Elev.:
First Encounter Dry ft
Upon Completion N/A ft
After ___ Hrs. N/A ft

Description	Elev.	DEPTH (ft)	BLOWS (/6")	UCS Qu (tsf)	MOIST (%)
4 inches of Topsoil	524.09				
Loose to Medium Dense Brown, Moist GRAVEL, little clay, trace roots (GP)			6		
			6 7		
			7		
			2		
		-5	2		
Medium Dense Brown, Moist SILTY LOAM, little clay, trace sand, trace gravel (ML)	518.42		2		
			4 10		
Very Dense Light Gray, Moist WEATHERED LIMESTONE	515.92		50/2"		
Auger refusal at 9.5 feet End of Boring	514.92	-10			
		-15			
		-20			

The Unconfined Compressive Strength (UCS) Failure Mode is indicated by (B-Bulge, S-Shear, P-Penetrometer)
The SPT (N value) is the sum of the last two blow values in each sampling zone (AASHTO T206)

BBS, form 137 (Rev. 8-99)

MODEL: Default
FILE NAME: 099W126-62F94-SF-07-Boring Log 2.dgn

SEB
1111 BURLINGTON AVE., SUITE 111 - LISLE, IL 60532
(630) 641-9800

USER NAME = jsandoval	DESIGNED - JSS	REVISED -	
	CHECKED - RRD	REVISED -	
PLOT SCALE = 0:1.9999 ':" / in.	DRAWN - TCK	REVISED -	
PLOT DATE = 10/28/2025	CHECKED - RRD	REVISED -	

STATE OF ILLINOIS
DEPARTMENT OF TRANSPORTATION

BORING LOGS 2 (2 OF 2)
STRUCTURE NO. 099-W126

SHEET SF-07 OF SF-07 SHEETS

F.A.I. RTE.	SECTION	COUNTY	TOTAL SHEETS	SHEET NO.
80	2017-057F	WILL	1342	917
		CONTRACT NO. 62F94		
		ILLINOIS	FED. AID PROJECT	

10/28/2025 9:50:55 AM

Benchmark: Iron Rod with Cap Sta. 67+63.19, 388.39' RT
N 1,764,330.037 and E 1,052,698.888
Elev.= 550.720

Existing Structures: None.

Traffic Control: EB I-80 traffic to Chicago St. will be detoured to the east at Richards St.

Salvage: None.

DESIGN SPECIFICATIONS

2020 AASHTO LRFD Bridge Design Specifications, 9th Edition

DESIGN STRESSES

PRECAST UNITS

f'c = 4,500 psi

FIELD UNITS

f'c = 3,500 psi (Coping)
f'c = 4,000 psi (Anchorage Slab and Barrier)
fy = 60,000 psi (Reinforcement)

NOTES:

1. Stations and offsets are measured from the ℄ of Ramp A to the front face of precast panels.
2. For General Notes, Index of Sheets, Profile Grade, Curve Data and Total Bill of Material, see Sheet SG-02.
3. For Table 1 - Wall Elevations 7B, Typical Sections thru Wall, see Sheet SG-03.

LEGEND

- Soil Boring
- Exist. Underground Electric
- Prop. Underground Electric
- Exist. Underground Gasline
- Exist. Underground Waterline
- Exist. Underground Sanitary Sewer
- Exist. ROW Access Control (To be removed)
- Exist. ROW
- Prop. Storm Sewer
- Prop. Pipe Underdrain
- Existing Tree
- Prop. Lighting
- F.F. Front Face
- B.F. Back Face
- Proposed Ditch
- Approx. Limits of Reinforced Soil Mass

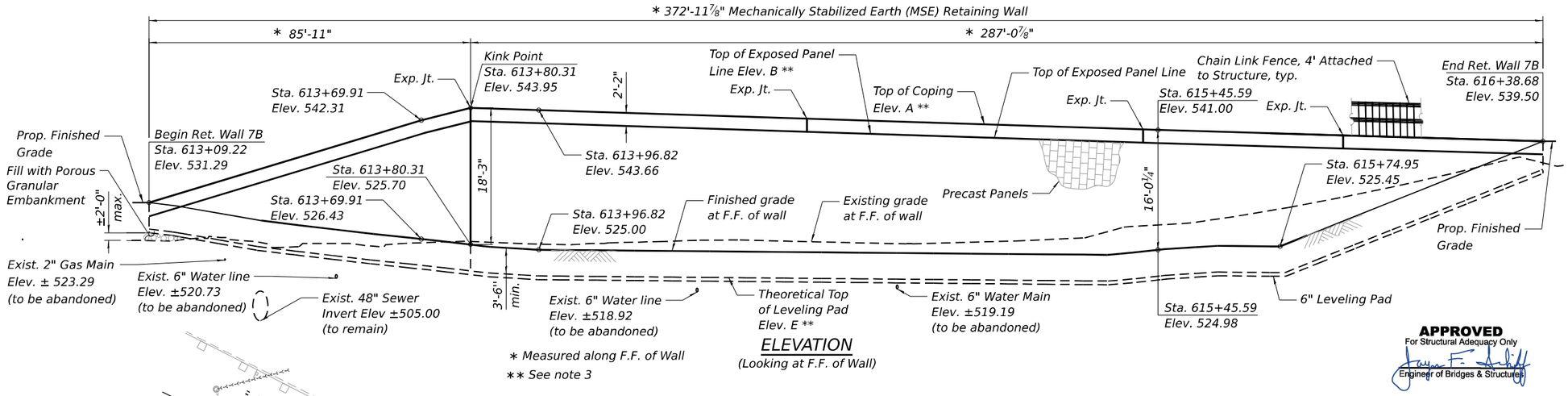

ELEVATION
(Looking at F.F. of Wall)

APPROVED
For Structural Adequacy Only
Engineer of Bridges & Structures

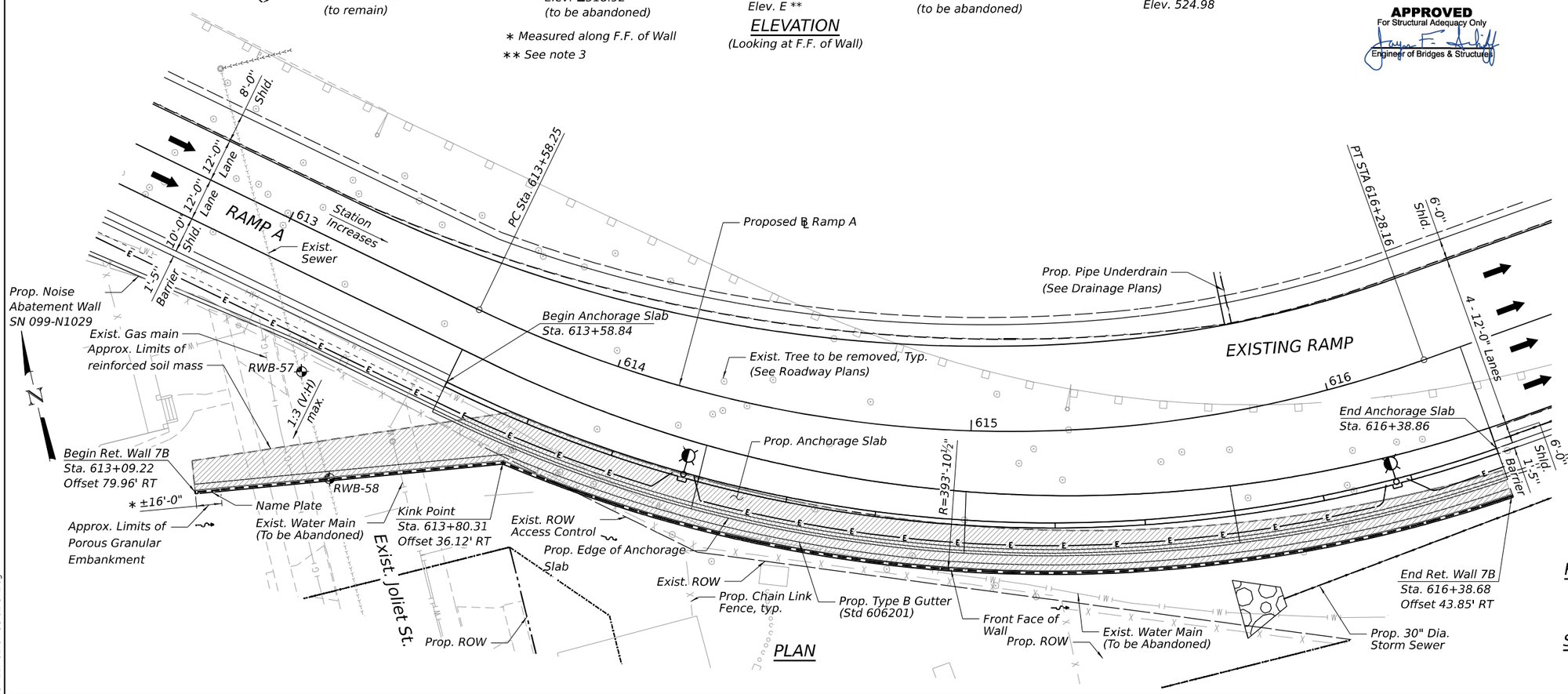

PLAN

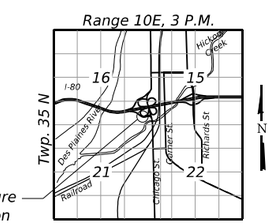

LOCATION SKETCH

LICENSED STRUCTURAL ENGINEER
RYAN R DOERRER
081-007941
STATE OF ILLINOIS

Date: 10-31-2025
Expires: 11-30-2026

GENERAL PLAN AND ELEVATION
RETAINING WALL 7B ALONG RAMP A
F.A.I. RTE. 80 - SEC. 2017-057F
WILL COUNTY
STA. 613+09.22 TO STA. 616+38.68
STRUCTURE NO. 099-W127

SEB
1111 BURLINGTON AVE., SUITE 111 - LISLE, IL 60532
(630) 641-9800

USER NAME = jsandoval	DESIGNED - JSS	REVISED -	
	CHECKED - RRD	REVISED -	
PLOT SCALE = 0:1.9999 ':" / in.	DRAWN - TCK	REVISED -	
PLOT DATE = 10/28/2025	CHECKED - RRD	REVISED -	

STATE OF ILLINOIS
DEPARTMENT OF TRANSPORTATION

SHEET SG-01 OF SG-14 SHEETS

F.A.I. RTE.	SECTION	COUNTY	TOTAL SHEETS	SHEET NO.
80	2017-057F	WILL	1342	918
		CONTRACT NO. 62F94		
		ILLINOIS	FED. AID PROJECT	

MODEL: Default
FILE NAME: 099W127-62F94-SG-01-GPE.dgn
10/28/2025 9:51:25 AM

GENERAL NOTES:

1. Reinforcement bars designated (E) shall be epoxy coated.
2. Cast-in-place concrete and reinforcement steel required for coping shall be included in the payment for Mechanical Stabilized Earth Retaining wall.
3. All Exposed concrete edges shall have a ¾" x 45° chamfer, except where shown otherwise. Chamfer on vertical edges shall be continued a minimum of one foot below the finished ground level.
4. Protective Coat shall be applied to the exposed areas of the anchorage slabs, parapets and to the exposed faces of the cast-in-place coping.
5. The Contractor shall field verify locations of existing underground utilities prior to beginning work. Existing utilities in conflict with retaining wall construction shall be abandoned or relocated according to the directions given on the Civil Plans. The Contractor shall take all necessary precautions to protect existing utilities to remain during all stages of construction. Any damage to the existing utilities to remain caused by the Contractor in the performance of the work shall be repaired by the Contractor, to the satisfaction of the Engineer, at no cost to the Department.
6. Stations and offsets are measured along the baseline of the Chicago Street Ramp A to the front face of precast panels.
7. Porous Granular Embankment shall be placed and compacted to a minimum of 95% of the maximum dry density in accordance with IDOT standard construction requirements.
8. The M.S.E. wall supplier's Internal stabllity deslgn shall account for the Anchorage Slab bearing pressure surcharge of 1.0 KSF and a horizontal force of 0.5 kips/ft. of wall.
9. Slip Forming of the parapets is not allowed.
10. When the proposed theoretical top of leveling pad is above the existing ground line, compacted Porous Granular Embankment must be place prior to the construction of the proposed leveling pad.

SUGGESTED SEQUENCE OF CONSTRUCTION

1. Place Porous Granular Embankment in areas where the bottom of the proposed leveling pad is at higher elevation than the the existing ground.
2. Excavate existing ground where required and build MSE wall leveling.
3. Compact Porous Granular Embankment before placing MSE wall leveling pad.
4. Construct leveling pad and place MSE wall to the required elevation.
5. Construct cast in place concrete coping.
6. Grade remaining finish grade slope to meet proposed roadway.
7. Construct Anchorage Slab.
8. Construct Noise Abatement Wall mounted to Anchorage Slab.

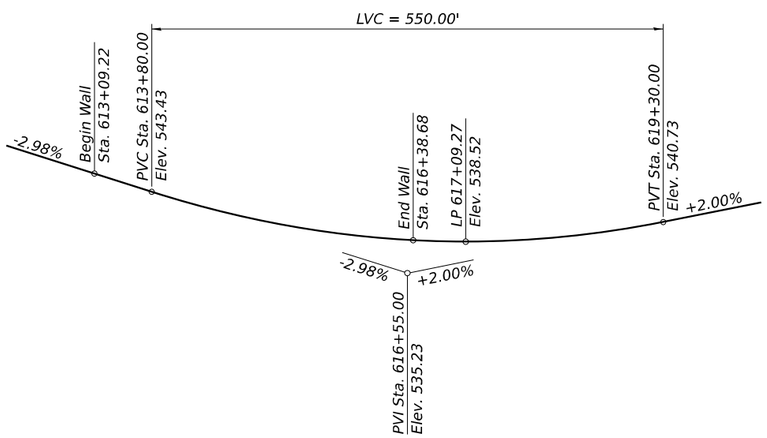

RAMP A PROFILE GRADE

(Along Prop. ℄ Ramp A)

INDEX OF SHEETS

PR RAMP A CURVE 2

P.I. Sta. = 615+00.77
Δ = 45°29'03" (LT)
D = 16°51'06"
R = 340.00'
T = 142.42'
L = 269.91'
E = 28.66'
e = 6.0%
P.C. Sta. = 613+58.25
P.T. Sta. = 616+28.16

TOTAL BILL OF MATERIAL

ITEM	UNIT	TOTAL
Structure Excavation	Cu Yd	977
Concrete Superstructure	Cu Yd	439.0
Protective Coat	Sq Yd	950
Reinforcement Bars, Epoxy Coated	Pound	45,700
Name Plates	Each	1
Mechanically Stabilized Earth Retaining Wall	Sq Ft	5,593
Porous Granular Embankment	Cu Yd	11
Chain Link Fence, 4' Attached to Structure	Foot	373
Noise Abatement Wall Anchor Rod Assembly	Each	28

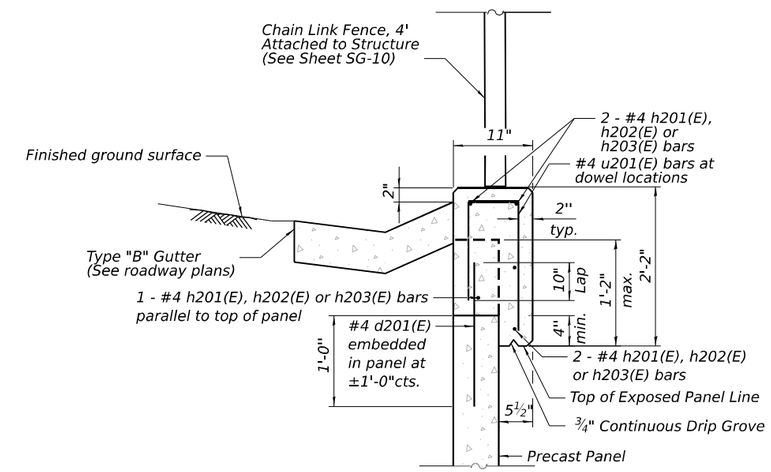

COPING DETAIL

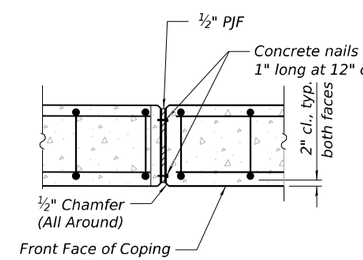

Coping Expansion Joint - PLAN

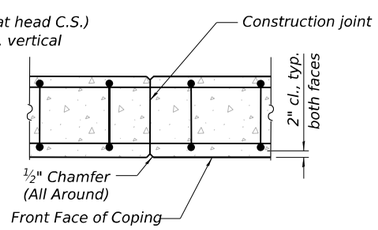

Coping Construction Joint - PLAN

(Provide construction joints at 30'-0" max. and 20'-0" min.)

STA. 613+09.22 TO 616+38.68
BUILT 20-- BY
STATE OF ILLINOIS
F.A.I. Rt. 80 Sec. 2017-057F
LOADING HL-93
STR. NO. 099-W127

NAME PLATE

See Std. 515001

MODEL: Default
FILE NAME: 099W127-62F94-SG-02-GenNotesandBOM.dgn

SEA
1111 BURLINGTON AVE., SUITE 111 - LISLE, IL 60532
(630) 641-9800

USER NAME = jsandoval	DESIGNED - JSS	REVISED -	
	CHECKED - RRD	REVISED -	
PLOT SCALE = 0:1.9999 ':" / in.	DRAWN - TCK	REVISED -	
PLOT DATE = 10/28/2025	CHECKED - RRD	REVISED -	

STATE OF ILLINOIS
DEPARTMENT OF TRANSPORTATION

GENERAL DATA
STRUCTURE NO. 099-W127

SHEET SG-02 OF SG-14 SHEETS

F.A.I. RTE.	SECTION	COUNTY	TOTAL SHEETS	SHEET NO.
80	2017-057F	WILL	1342	919
		CONTRACT NO. 62F94		
		ILLINOIS	FED. AID PROJECT	

10/28/2025 9:51:38 AM

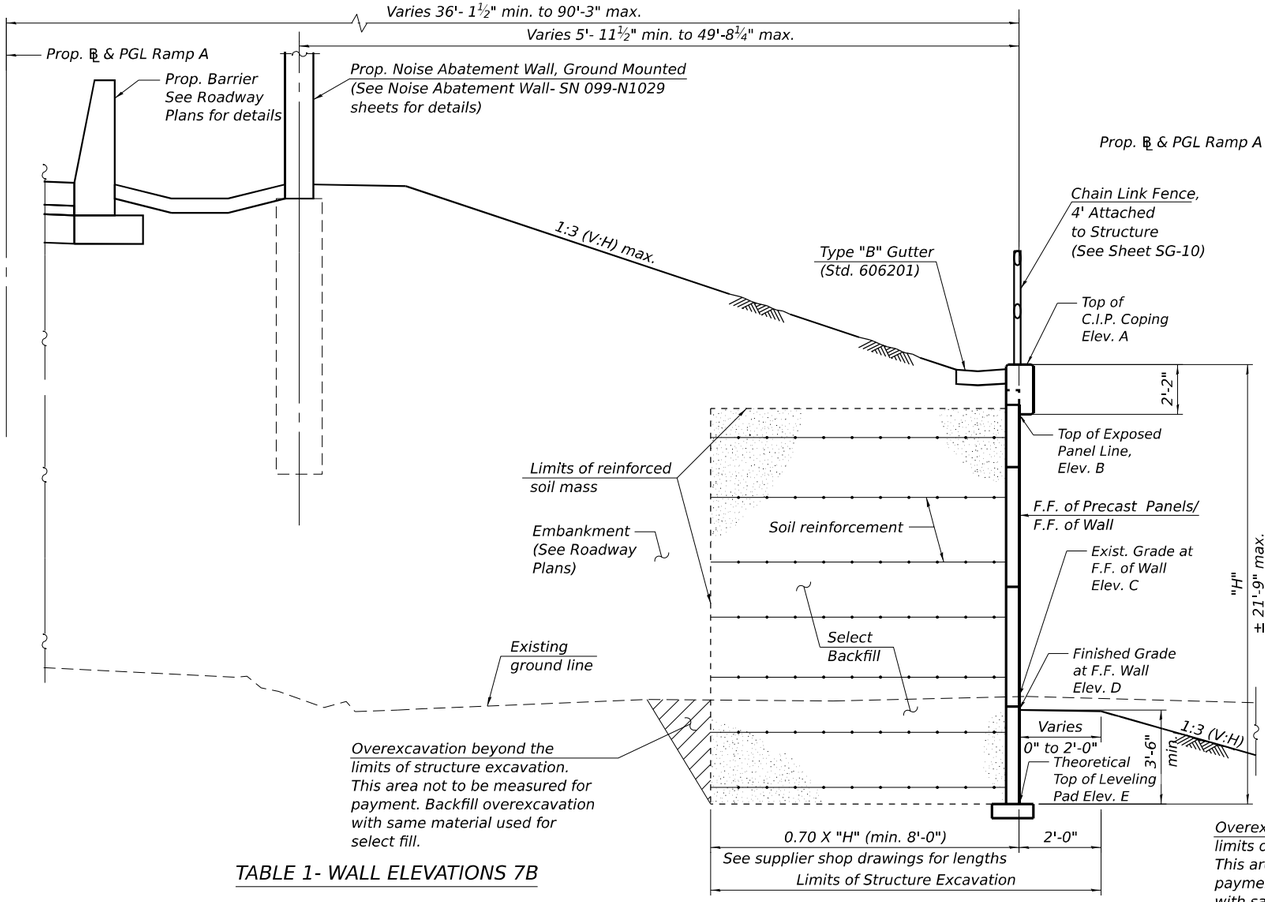

TYPICAL WALL SECTION

(Sta. 613+09.22 thru Sta. 613+80.31)
(Looking East)

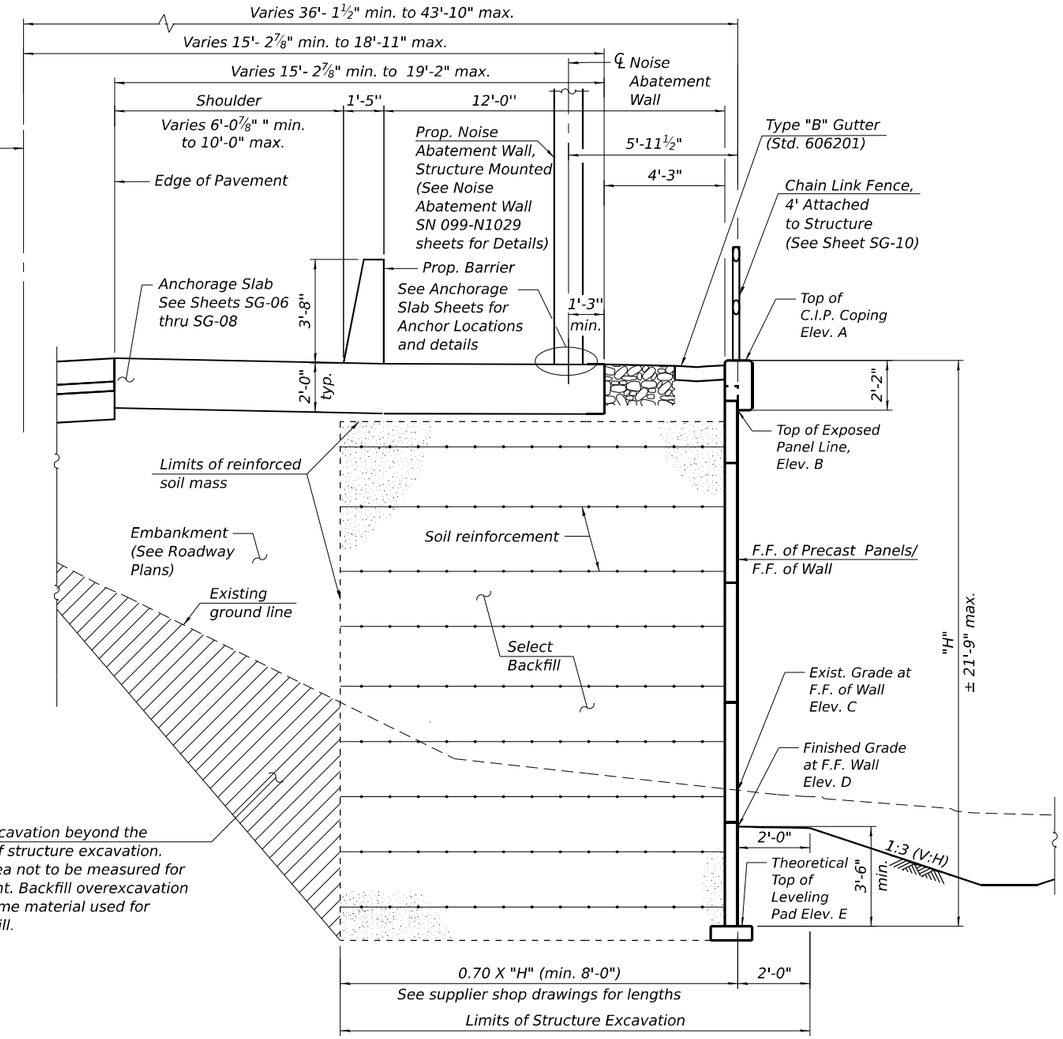

TYPICAL WALL SECTION

(Sta. 613+80.31 thru Sta. 616+38.68)
(Looking East)

TABLE 1- WALL ELEVATIONS 7B

Station	Offset from ℄ Ramp A	A Top of C.I.P. Coping	B Top of Exposed Panel Line	C Exist. Grade at F.F. Wall	D Finished Grade at F.F. Wall	E Theoretical Top of Leveling Pad
613+09.22	76.96' Rt	521.29	519.12	526.21	531.29	527.79
613+15.50	76.14' Rt	523.47	521.30	526.22	530.85	527.35
613+30.00	67.33' Rt	528.49	526.32	526.44	529.38	525.88
613+60.00	48.94' Rt	538.88	536.71	525.49	527.13	523.63
613+69.91	42.73' Rt	542.31	540.14	525.91	526.43	522.93
613+80.31	36.12' Rt	543.95	541.78	526.10	525.70	522.20
613+85.25	36.19' Rt	543.86	541.70	526.00	525.37	521.87
613+90.00	36.26' Rt	543.78	541.61	525.90	525.22	521.72
613+96.82	36.36' Rt	543.66	541.49	525.76	525.00	521.50
614+20.00	36.77' Rt	543.25	541.08	526.00	524.89	521.39
614+50.00	37.42' Rt	542.71	540.54	526.24	524.74	521.24
614+61.50	37.70' Rt	542.50	540.34	526.07	524.68	521.18
614+80.00	38.18' Rt	542.17	540.01	525.85	524.59	521.09
615+10.00	39.07' Rt	541.64	539.47	526.14	524.44	520.94
615+33.40	39.84' Rt	541.22	539.05	527.32	524.32	520.82
615+39.71	40.06' Rt	541.11	538.94	528.10	524.61	521.11
615+40.00	40.07' Rt	541.10	538.93	528.10	524.62	521.12
615+42.24	40.14' Rt	541.06	538.89	528.20	524.77	521.27
615+45.59	40.26' Rt	541.00	538.83	528.26	524.98	521.48
615+46.89	40.31' Rt	540.98	538.81	528.30	525.06	521.56
615+59.71	40.78' Rt	540.77	538.61	529.06	525.52	522.02
615+70.00	41.17' Rt	540.61	538.44	529.97	525.47	521.97
615+74.95	41.36' Rt	540.53	538.36	530.44	525.45	521.95
615+89.95	41.95' Rt	540.29	538.12	532.02	528.80	525.30
616+00.00	42.37' Rt	540.12	537.96	533.16	531.06	527.56
616+30.00	43.64' Rt	539.64	537.47	537.09	537.79	534.29
616+38.68	43.85' Rt	539.50	537.33	536.59	539.50	536.00

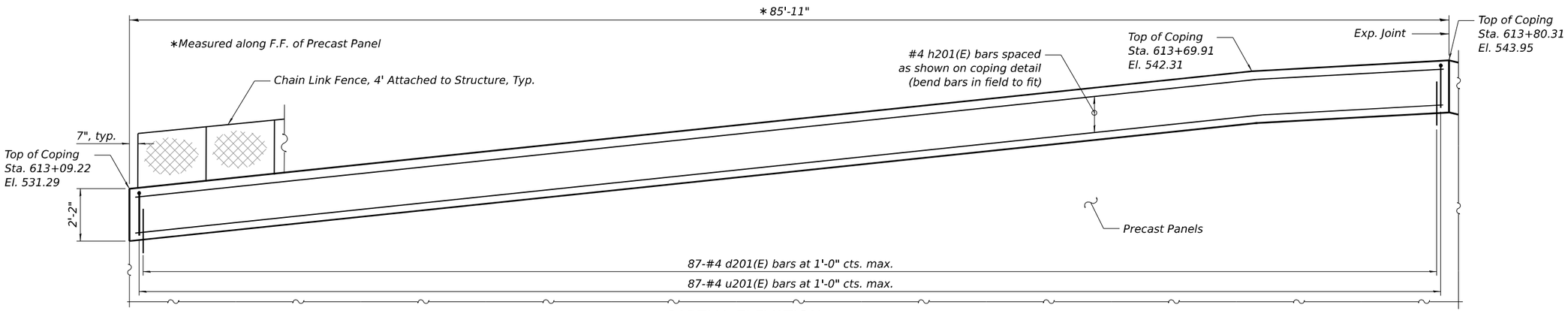

PARTIAL ELEVATION
(Looking at F.F. of Wall)

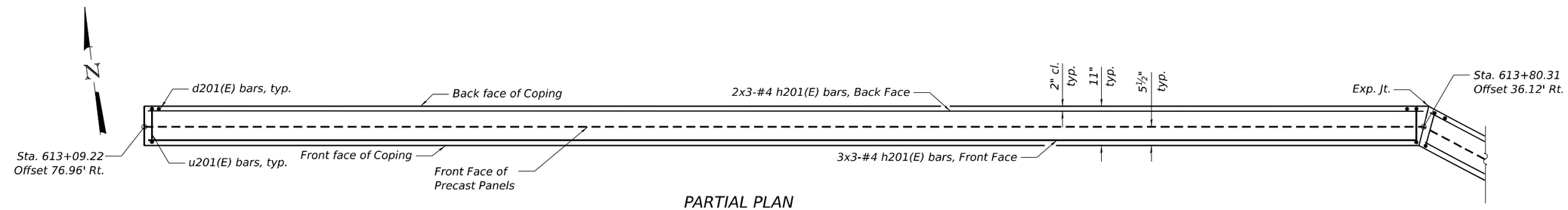

PARTIAL PLAN

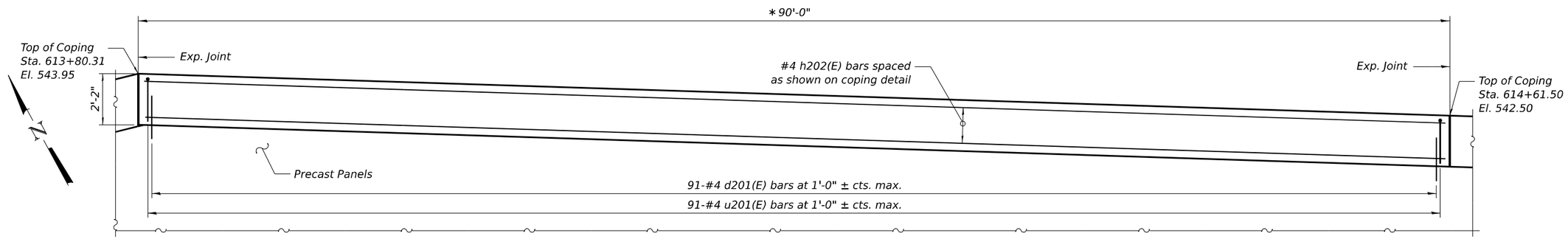

PARTIAL ELEVATION - UNFOLDED
(Looking at F.F. of Wall)

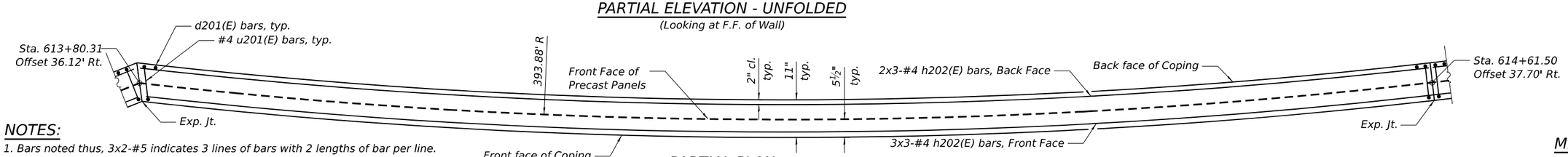

PARTIAL PLAN

NOTES:

1. Bars noted thus, 3x2-#5 indicates 3 lines of bars with 2 lengths of bar per line.
2. For control points stations, offset, elevations, Typical section, see Sheet SG-03.
3. For coping detail and for coping construction joint spacing requirements see Coping Construction Joint - Plan Detail, see Sheet SG-02.
4. The cost of the concrete and the reinforcement steel required for the coping shall be included in the cost of Mechanically Stabilized Earth Retaining Wall.
5. See Sheet SG-05 for Bill of Material (For information only).

MIN. LAP LENGTH

#4 Bar = 2'-11"

MODEL: Default
FILE NAME: 099W127-62F94-SG-04-Plan-Elev1.dgn

SGS 1111 BURLINGTON AVE., SUITE 111 - LISLE, IL 60532 (630) 641-9800	USER NAME = jsandoval	DESIGNED - JSS	REVISED -	STATE OF ILLINOIS DEPARTMENT OF TRANSPORTATION	COPING PLAN AND ELEVATION 1 STRUCTURE NO. 099-W127
		CHECKED - RRD	REVISED -		
	PLOT SCALE = 0:1.9999 ':" / in.	DRAWN - TCK	REVISED -		
	PLOT DATE = 10/28/2025	CHECKED - RRD	REVISED -		SHEET SG-04 OF SG-14 SHEETS

F.A.I. RTE.	SECTION	COUNTY	TOTAL SHEETS	SHEET NO.
80	2017-057F	WILL	1342	921
		CONTRACT NO. 62F94		
		ILLINOIS	FED. AID PROJECT	

10/28/2025 9:51:59 AM

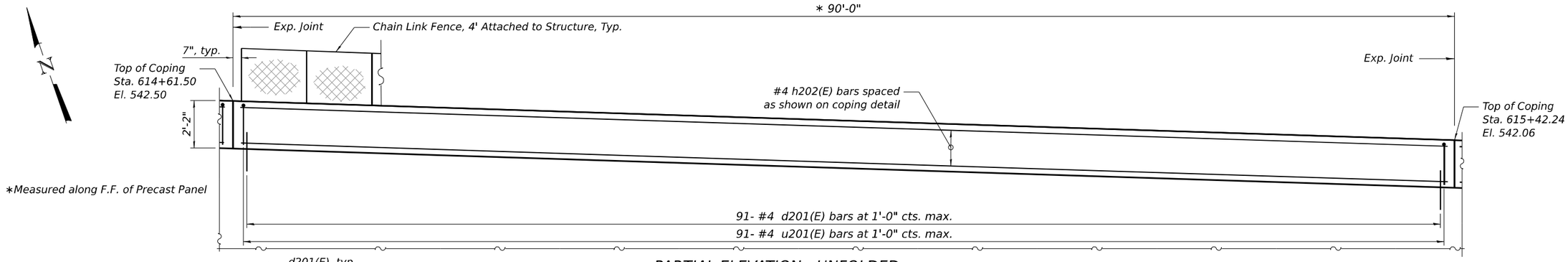

PARTIAL ELEVATION - UNFOLDED

(Looking at F.F. of Wall)

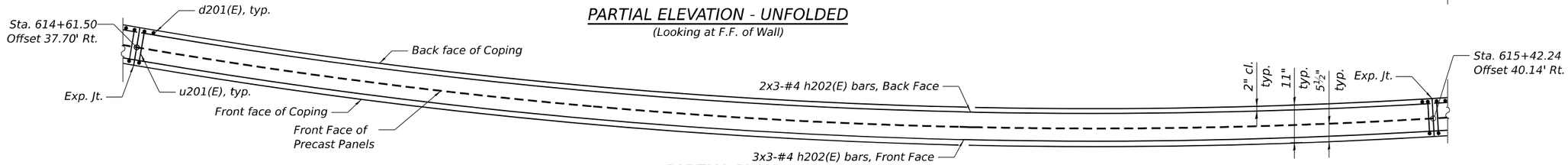

PARTIAL PLAN

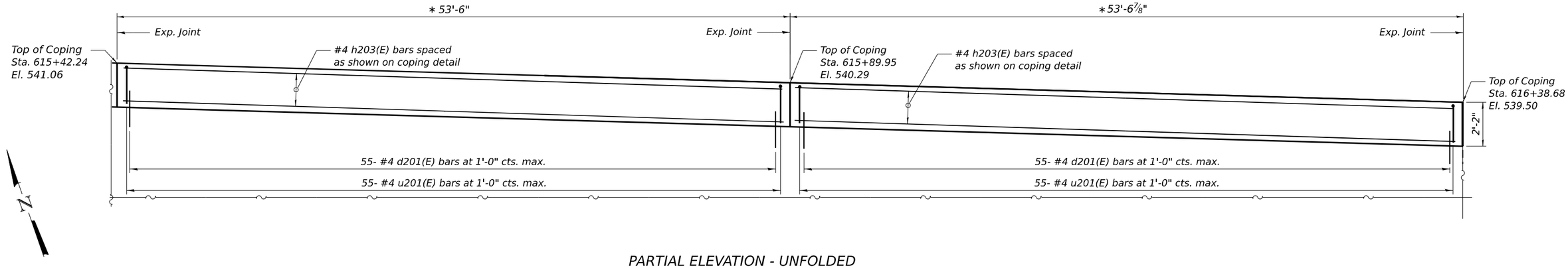

PARTIAL ELEVATION - UNFOLDED

(Looking at F.F. of Wall)

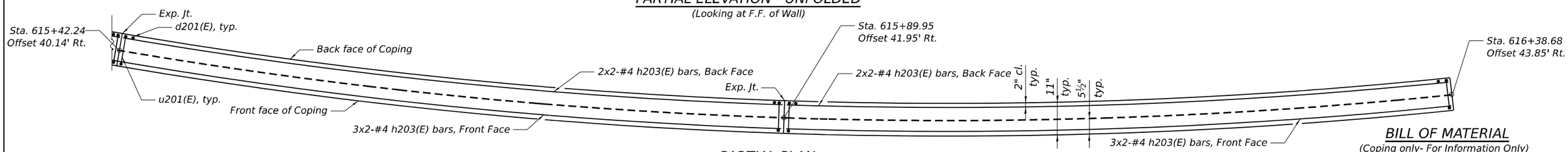

PARTIAL PLAN

NOTES:

1. See Sheet SG-04 for notes.

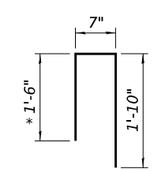

MIN. LAP LENGTH

#4 Bar = 2'-11''

BAR u201(E)

∗ cut bar to fit

BILL OF MATERIAL

(Coping only- For Information Only)

Bar	No.	Size	Length	Shape
d201(E)	379	#4	2'-0"	———
h201(E)	15	#4	30'-11"	———
h202(E)	30	#4	31'-11"	———
h203(E)	20	#4	28'-1"	———
u201(E)	379	#4	3'-11"	┌
Concrete Structures			Cu. Yd.	25.3
Reinforcement Bars, Epoxy Coated			Pound	2,830

MODEL: Default
FILE NAME: 099W127-62F94-SG-05-Plan-Elev 2.dgn

SGS
1111 BURLINGTON AVE., SUITE 111 - LISLE, IL 60532
(630) 641-9800

USER NAME = Jsandoval	DESIGNED - JSS	REVISED -	
	CHECKED - RRD	REVISED -	
PLOT SCALE = 0:1.9999 ':" / in.	DRAWN - TCK	REVISED -	
PLOT DATE = 10/28/2025	CHECKED - RRD	REVISED -	

STATE OF ILLINOIS
DEPARTMENT OF TRANSPORTATION

COPING PLAN AND ELEVATION 2
STRUCTURE NO. 099-W127

SHEET SG-05 OF SG-14 SHEETS

F.A.I. RTE.	SECTION	COUNTY	TOTAL SHEETS	SHEET NO.
80	2017-057F	WILL	1342	922
		CONTRACT NO. 62F94		
		ILLINOIS	FED. AID PROJECT	

10/28/2025 9:52:11 AM

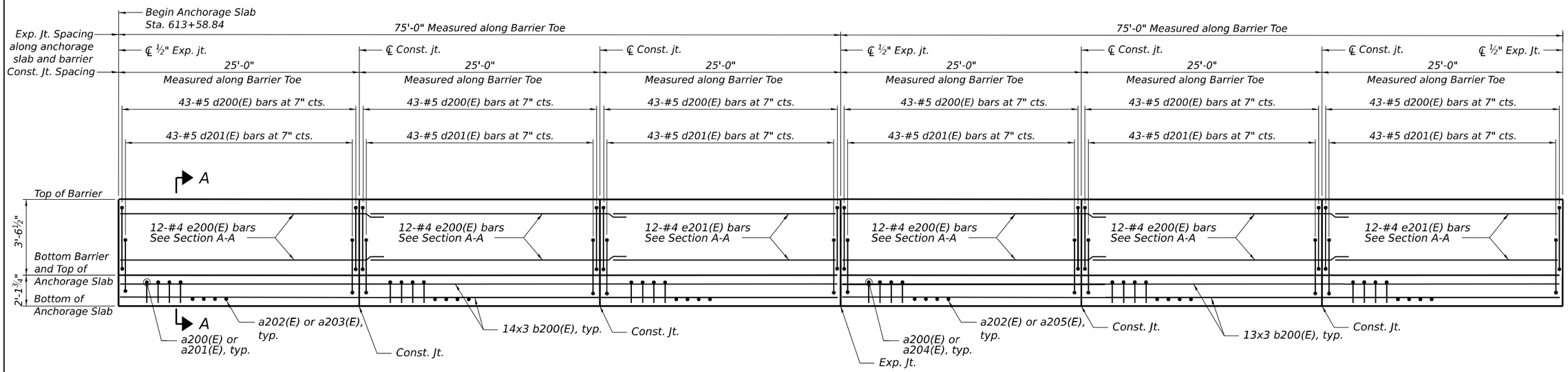

PARTIAL ELEVATION

(Looking North)

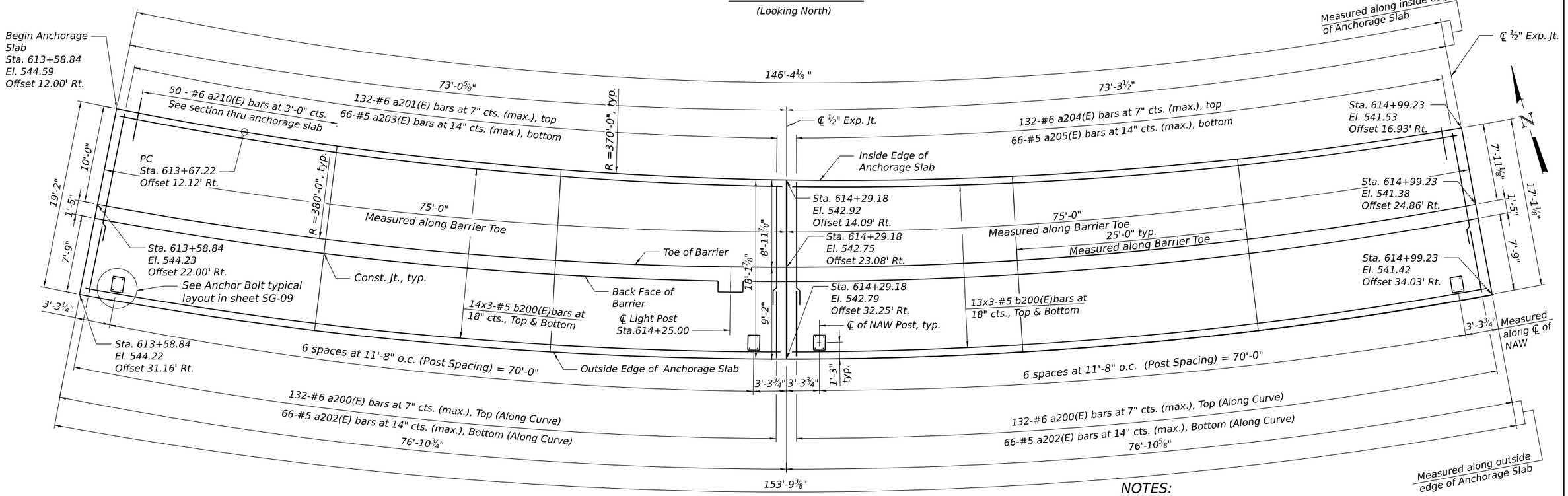

PARTIAL PLAN

MIN. LAP LENGTH

#4 Bar 2'-8"
#5 Bar 3'-6"
#6 Bar 4'-0"

NOTES:

1. Bars noted thus, 3x2-#5 indicates 3 lines of bars with 2 lengths of bar per line.
2. For Section A-A, see Sheet SG-08.
3. See Sheet SG-08 for Bill of Material.
4. For Light Pole Bump out Details, see Sheet SG-08.
5. The contractor shall verify the locations, spacing and elevations of the Noise Abatement Wall post prior to the intallation of the Noise Abatement Wall Anchor Rod Assembly.

MODEL: Default
FILE NAME: 099W127-62F94-SG-06-Slab-Plan-Elev1.dgn

SEB
1111 BURLINGTON AVE. SUITE 111 - LISLE, IL 60532
(630) 641-9900

USER NAME = jsandoval	DESIGNED - JSS	REVISED -	
	CHECKED - RRD	REVISED -	
PLOT SCALE = 0:1.9999 ':" / in.	DRAWN - TCK	REVISED -	
PLOT DATE = 10/28/2025	CHECKED - RRD	REVISED -	

STATE OF ILLINOIS
DEPARTMENT OF TRANSPORTATION

ANCHORAGE SLAB PLAN AND ELEVATION 1
STRUCTURE NO. 099-W127

SHEET SG-06 OF SG-14 SHEETS

F.A.I. RTE.	SECTION	COUNTY	TOTAL SHEETS	SHEET NO.
80	2017-057F	WILL	1342	923
		CONTRACT NO. 62F94		
	ILLINOIS	FED. AID PROJECT		

10/28/2025 9:52:21 AM

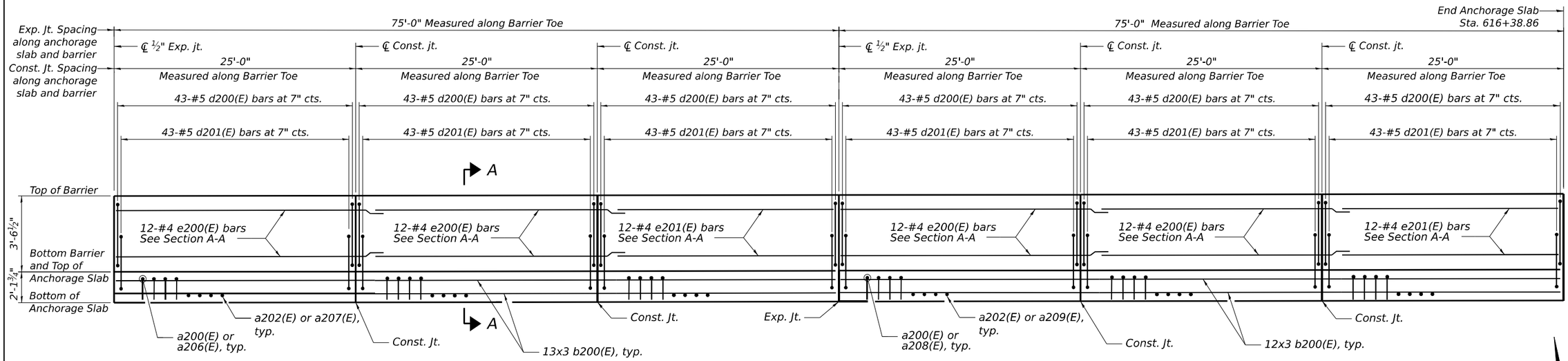

PARTIAL ELEVATION

(Looking North)

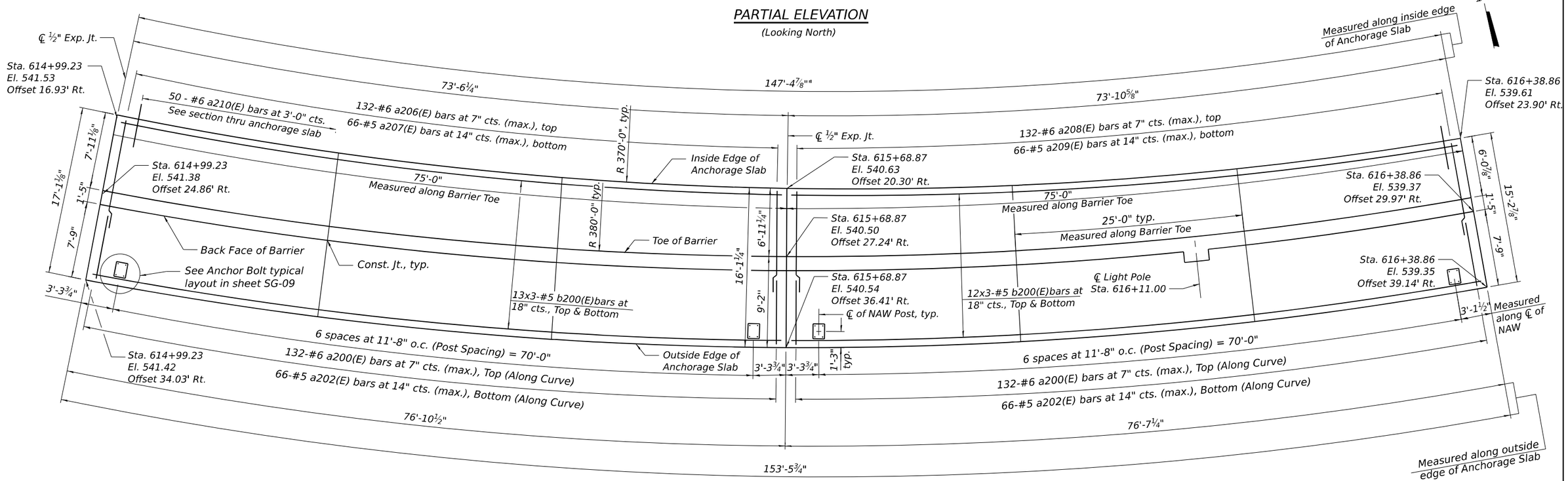

PARTIAL PLAN

MIN. LAP LENGTH

#4 Bar 2'-8"
#5 Bar 3'-6"
#6 Bar 4'-0"

NOTES:

1. See Sheet SG-06 for notes.

MODEL: Default
FILE NAME: 099W127-62F94-SG-07-Slab-Plan-Elev2.dgn

SEB
1111 BURLINGTON AVE., SUITE 111 - LISLE, IL 60532
(630) 641-9900

USER NAME = Jsandoval	DESIGNED - JSS	REVISED -	
	CHECKED - RRD	REVISED -	
PLOT SCALE = 0:1.9999 ':" / in.	DRAWN - TCK	REVISED -	
PLOT DATE = 10/28/2025	CHECKED - RRD	REVISED -	

STATE OF ILLINOIS
DEPARTMENT OF TRANSPORTATION

ANCHORAGE SLAB PLAN AND ELEVATION 2
STRUCTURE NO. 099-W127

SHEET SG-07 OF SG-14 SHEETS

F.A.I. RTE.	SECTION	COUNTY	TOTAL SHEETS	SHEET NO.
80	2017-057F	WILL	1342	924
		CONTRACT NO. 62F94		
		ILLINOIS	FED. AID PROJECT	

10/28/2025 9:52:32 AM

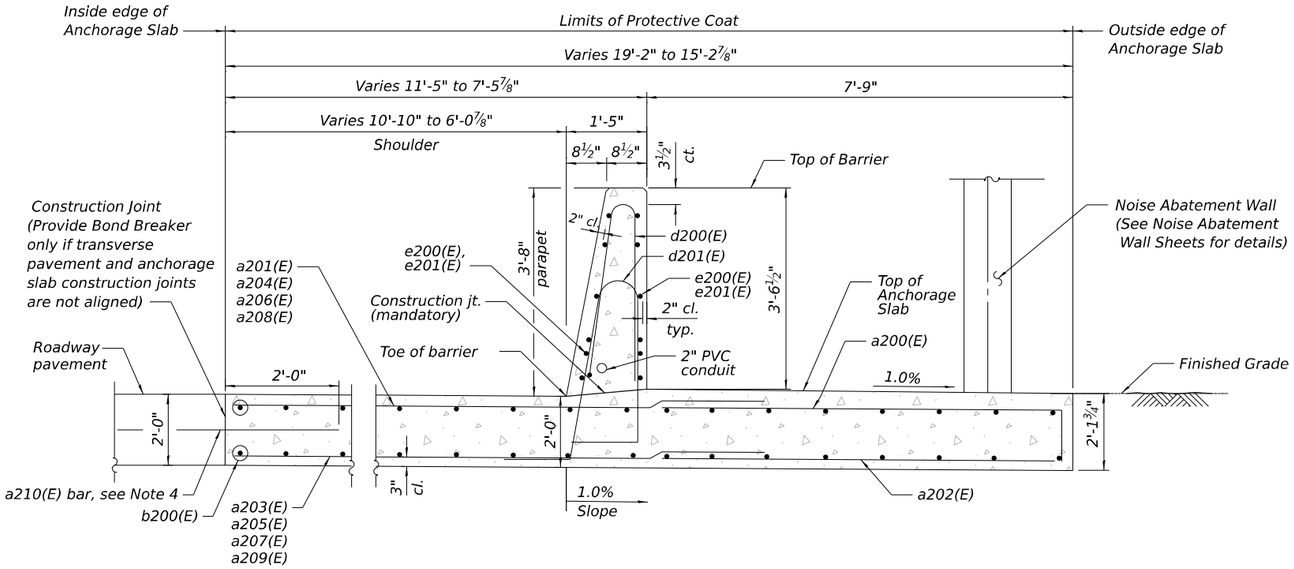

SECTION A-A

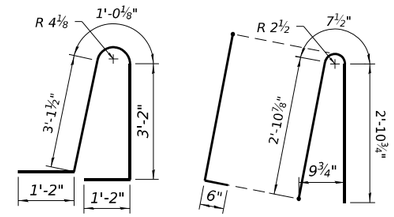

Bar d201(E) Bar d200(E)

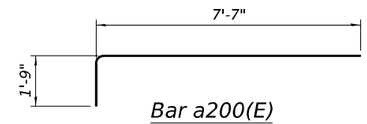

Bar a200(E)

BILL OF MATERIAL

Bar	No.	Size	Length	Shape
a200(E)	528	#6	9'-4"	
a201(E)	132	#6	15'-7"	
a202(E)	264	#5	7'-7"	
a203(E)	66	#5	15'-1"	
a204(E)	132	#6	14'-5"	
a205(E)	66	#5	13'-11"	
a206(E)	132	#6	13'-5"	
a207(E)	66	#5	12'-11"	
a208(E)	132	#6	12'-5"	
a209(E)	66	#5	11'-11"	
a210(E)	100	#6	4'-0"	
b200(E)	312	#5	27'-11"	***
d200(E)	516	#5	7'-0"	
d201(E)	516	#5	9'-8"	
d202(E)	6	#6	5'-3"	
d203(E)	12	#6	8'-11"	
e200(E)	96	#4	27'-8"	
e201(E)	48	#4	24'-8"	
Concrete Superstructure			Cu Yd	439.0
Protective Coat			Sq Yd	796
Reinforcement Bars, Epoxy Coated			Pound	45,700
Noise Abatement Wall Anchor Rod Assembly			Each	28

*** Bars are to be provided straight and are to be sprung and tied at the required radius in the field.

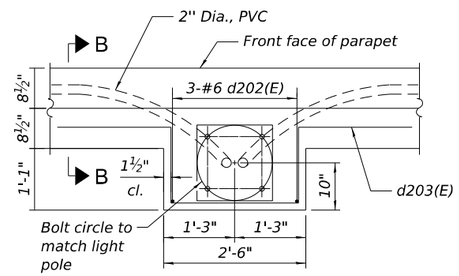

LIGHT POLE BUMPOUT PLAN

NOTES:

1. The Polyurethane Sealant shall be according to Article 1050.04 of the Standard Specifications and the color shall be gray.
2. Cost of expansion joints shall be included in Concrete Superstructure.
3. The saw grove shall use a hot poured joint sealer per Article 1050.02 of the standard Specification, cost included in Concrete Superstucture.
4. #6 a210(E) 4'-0" long dowel bars shall be placed at mid-depth of adjacent pavement at a maximum of 3'-0" plan spacing. If dowel bar aligns within 1'-6" of a pavement joint, the dowel bar shall be repositioned such that it is placed at a mimimum of 1'-6" from either side of the pavement joint.

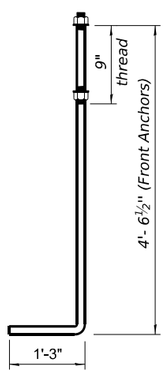

ANCHOR ROD

Diameter as specified for light poles. (ASTM F 1554 Grade 105) Full length hot dipped galvanized. Provide 3 flat washers, 1 isolation washer, 1 regular nut, and 1 locknut for each rod. Cost of anchor rods and hardware is included in Concrete Superstructure.

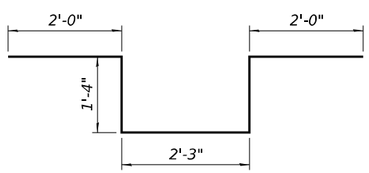

BAR d203(E)

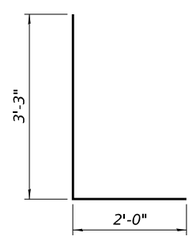

BAR d202(E)

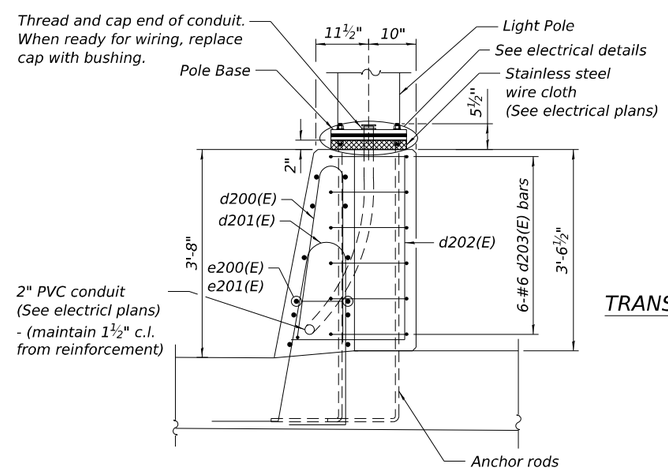

SECTION B-B

See Section A-A for reinforcement in Anchorage slab.

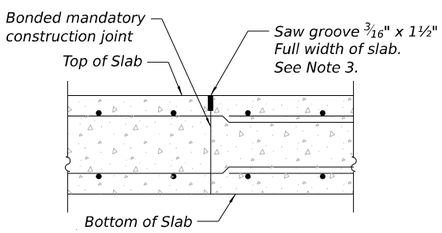

TRANSVERSE CONSTRUCTION JT. IN SLAB - SECTION

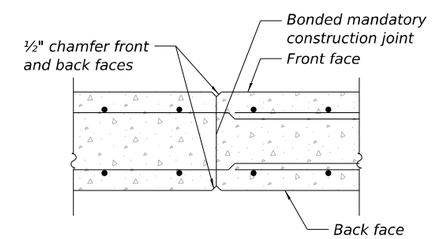

TRANSVERSE CONSTRUCTION JT. IN BARRIER - PLAN

MODEL: Default
FILE NAME: 099W127-62F94-SG-08-Slab-Sec&Details1.dgn

SEA
1111 BURLINGTON AVE., SUITE 111 - LISLE, IL 60532
(630) 641-9900

USER NAME = jsandoval	DESIGNED - JSS	REVISED -	
	CHECKED - RRD	REVISED -	
PLOT SCALE = 0:1.9999 ':" / in.	DRAWN - TCK	REVISED -	
PLOT DATE = 10/28/2025	CHECKED - RRD	REVISED -	

STATE OF ILLINOIS
DEPARTMENT OF TRANSPORTATION

ANCHORAGE SLAB DETAILS AND TYPICAL SECTION
STRUCTURE NO. 099-W127

SHEET SG-08 OF SG-14 SHEETS

F.A.I. RTE.	SECTION	COUNTY	TOTAL SHEETS	SHEET NO.
80	2017-057F	WILL	1342	925
		CONTRACT NO. 62F94		
	ILLINOIS	FED. AID PROJECT		

10/28/2025 9:52:43 AM

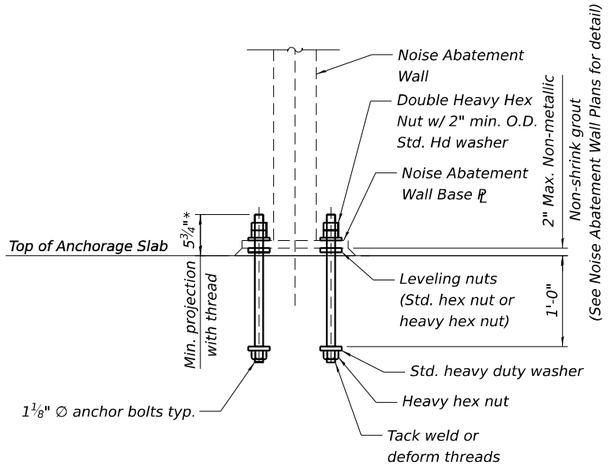

NOISE ABATEMENT WALL ANCHOR BOLT SIDE VIEW

* Verify with Noise Abatement Wall Manufacture before ordering bolts.

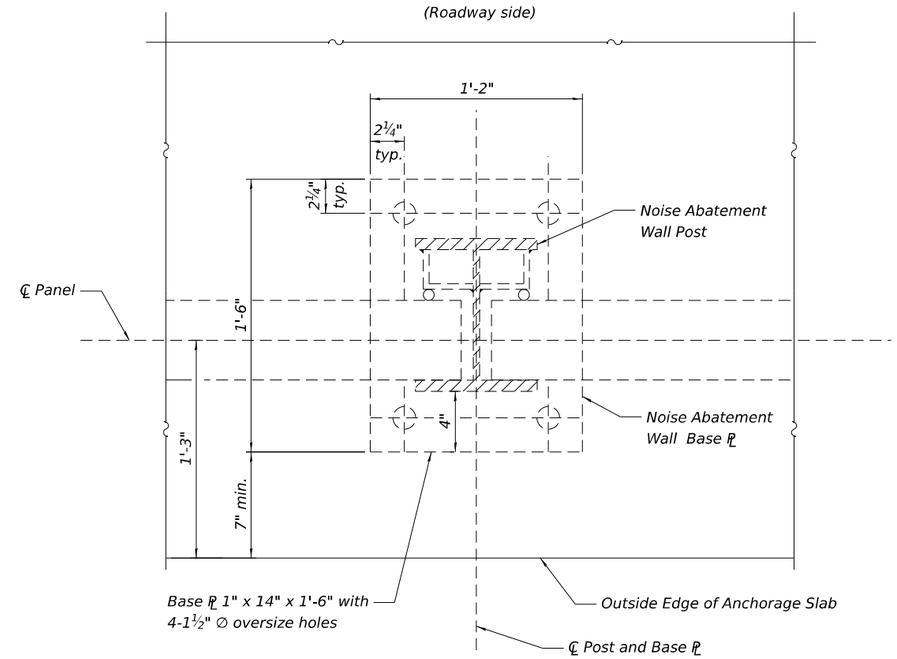

NOISE ABATEMENT WALL BASE PLATE AND ANCHOR BOLT LAYOUT

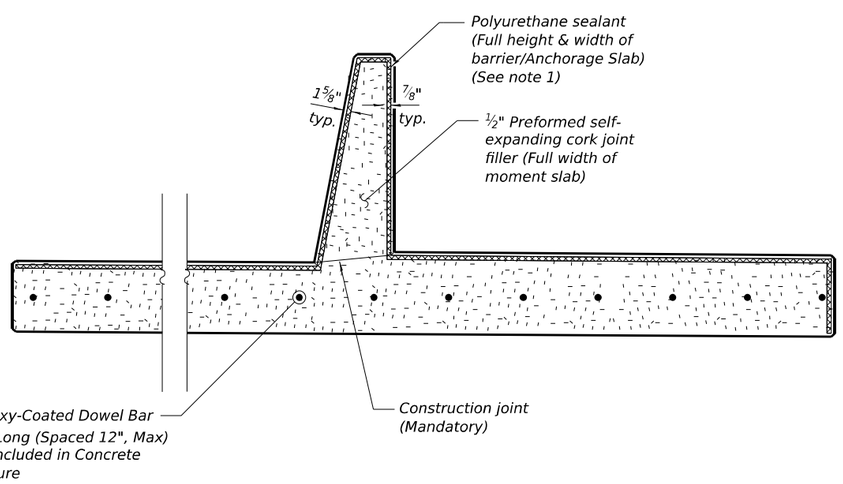

EXPANSION JOINT DETAILS

See Note 2 on SG-08

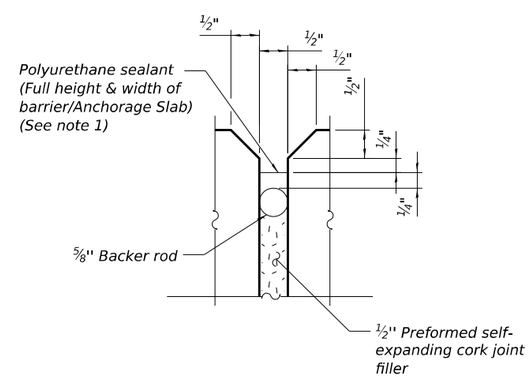

NOTE:

1. See Sheet SG-08 for additional notes.
2. The Contractor shall use a ¼" thick template plate or other Engineer approved methods to maintain the anchor bolts' alignment during concrete placement. The template plate shall match the plan dimensions of the Noise Abatement Wall base plate, for the installation of the Noise Abatement Wall Anchor Rod Assembly. The template plate must not be embedded into the concrete and must be removed prior to the installation of the Noise Abatement Wall post and grout pad. Plate and other positioning aids become Contractor's property. Cost included in "Noise Abatement Wall Anchor Rod Assembly".

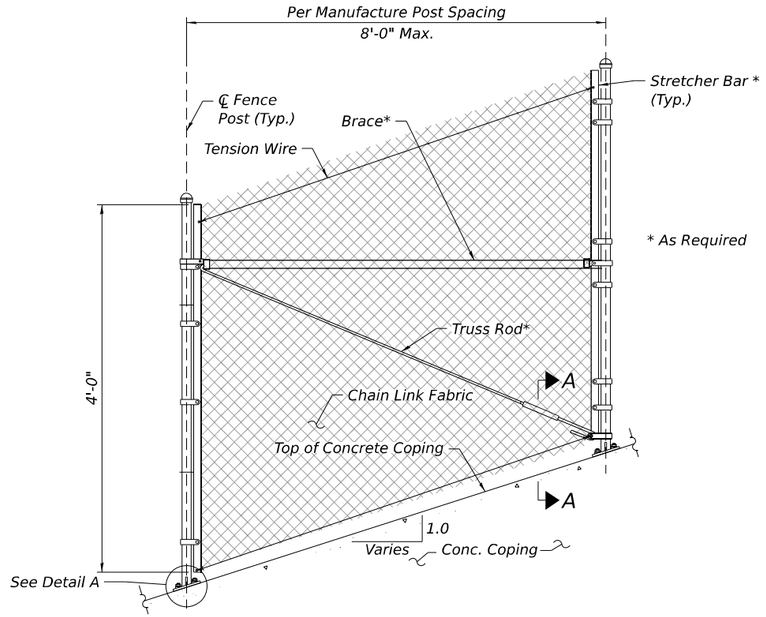

CHAIN LINK FENCE ELEVATION

(Along top of Concrete Coping)

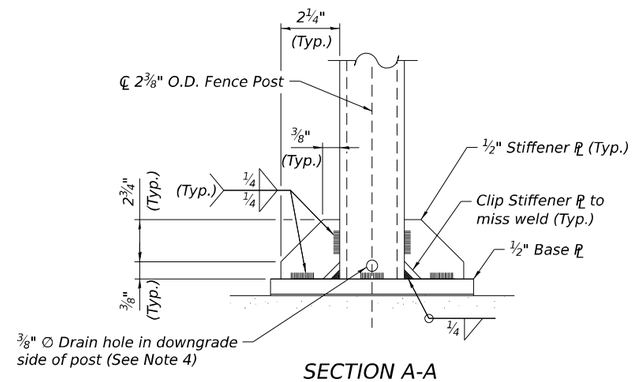

SECTION A-A

(Fence Post base plate connection)

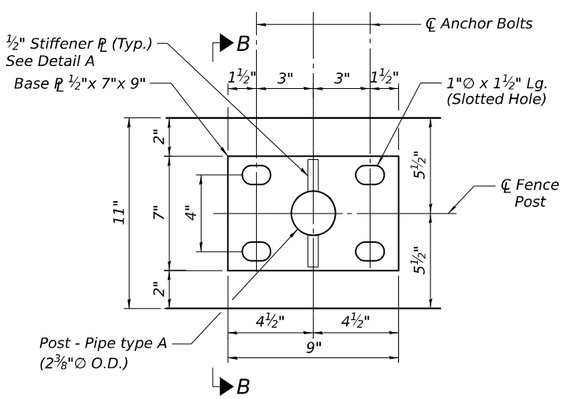

Base PL

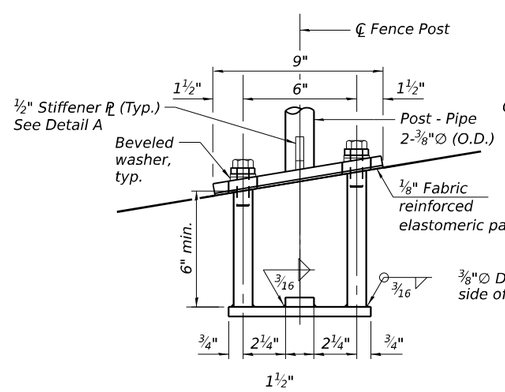

Detail A

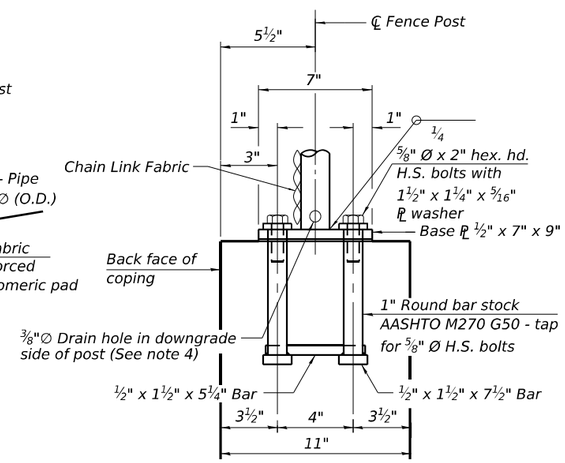

SECTION B-B

(Stiffener not shown for clarity)

NOTES:

1. See IDOT Highway Standard Drawing 664001-02 for additional fence details.
2. Fence shall be continuous over concrete coping expansion joints.
3. At all fence locations, the end posts shall be 7" from the the coping expansion joint and ends.
4. Drill Drain hole to miss fillet weld and prior to galvanizing. Hole shall be drilled as close to the weld as possible.
5. Edge distance from a construction or expansion joint in the proposed copings to an expansion anchor shall be per manufacturer's specifications.
6. For CIP Concrete coping details see sheet SG-02.
7. Place reinforcement bars to miss anchor rod locations.
8. All heavy hex nuts shall be according to ASTM A 563 grade DH.
9. All fully threaded anchor rods shall be ASTM F1554 grade 105.
10. The post base plate shall be fastened to the top of the cast in place coping snug tight and given an additional ⅛" turn.

BASE PLATE NOTES:

A. Base Plates shall be fabricated from material meeting the requirements of AASHTO M270 Grade 50.

B. Base Plates and Posts shall be Hot Dipped Galvanized after fabrication in accordance with AASHTO M111.

C. All fabrication shall be per Article 505.04 of the Standard Specifications.

D. All bolts, nuts, washers and anchors shall be galvanized according to AASHTO M 232.

ANCHORAGE ASSEMBLY

In lieu of the cast-in-place anchor device shown, the Contractor has the option of drilling and setting ⅝" Ø fully threaded anchor rods with the same plate washers as specified above and heavy hex lock nuts according to Article 509.06 of the Standard Specifications. Embedment shall be according to the manufacturer's specifications.

BILL OF MATERIAL

Item	Unit	Quantity
Chain Link Fence, 4' Attached to Structure	Foot	373

MODEL: Default
FILE NAME: 099W127-62F94-SG-10-Chain Link Fence.dgn

SEA
1111 BURLINGTON AVE., SUITE 111 - LISLE, IL 60532
(630) 641-9600

USER NAME = jsandoval	DESIGNED - JSS	REVISED -	
	CHECKED - RRD	REVISED -	
PLOT SCALE = 0:1.9999 ':" / in.	DRAWN - TCK	REVISED -	
PLOT DATE = 10/28/2025	CHECKED - RRD	REVISED -	

STATE OF ILLINOIS
DEPARTMENT OF TRANSPORTATION

CHAIN LINK FENCE ATTACHED TO STRUCTURE
STRUCTURE NO. 099-W127

SHEET SG-10 OF SG-14 SHEETS

F.A.I. RTE.	SECTION	COUNTY	TOTAL SHEETS	SHEET NO.
80	2017-057F	WILL	1342	927
		CONTRACT NO. 62F94		
		ILLINOIS	FED. AID PROJECT	

10/28/2025 9:53:03 AM

Illinois Department of Transportation
Division of Highways
GSG Consultants, Inc.

SOIL BORING LOG

Page 1 of 1

Date 10/20/22

ROUTE I-80 DESCRIPTION Retaining Wall No. 7 - Ramp A LOGGED BY AA

SECTION C-91-109-22 LOCATION , SEC. 16, TWP. 35 N, RNG. 10 E,
Latitude , Longitude

COUNTY Will DRILLING RIG Diedrich D-50 HAMMER TYPE Auto
DRILLING METHOD HSA HAMMER EFF (%) 95.5

STRUCT. NO. 099-W127
Station

BORING NO. RWB-57
Station 613+21.30
Offset 36.96ft RT
Ground Surface Elev. 525.80 ft

Surface Water Elev. 17.00 ft
Stream Bed Elev. N/A ft

Groundwater Elev.:
First Encounter Dry ft
Upon Completion N/A ft
After ___ Hrs. N/A ft

Description	Elev.	DEPTH (ft)	BLOWS (/6")	UCS Qu (tsf)	MOIST (%)
4 inches of Asphalt	525.47				
8 inches of Aggregate Subbase	524.80				
Loose to Medium Dense Brown, Moist SAND, with gravel, trace clay seams (SPG)			28 14 10		6
			4		
			6 9		10
		-5			
			5		
			6 8		11
			5		
Cobbles at 9 feet			7 8		9
		-10			
			4		
			3 4		10
	512.30				
Medium Dense Brown, Moist CLAYEY GRAVEL (GC)			4		
			6 7		10
		-15			
	509.80				
Soft Gray, Very Moist SILTY CLAY, trace gravel (CL/ML)			2		
			2 3	0.4 P	38
	507.30				
Medium Dense to Very Dense Gray, Moist GRAVEL, trace clay seams (GP)			14		
			23 5		14
		-20			

Description	Elev.	DEPTH (ft)	BLOWS (/6")	UCS Qu (tsf)	MOIST (%)
Medium Dense to Very Dense Gray, Moist GRAVEL, trace clay seams (GP) *(continued)*					
	504.30		50/2"		
WEATHERED LIMESTONE	503.80				9
Auger refusal at 22.0 feet End of Boring					
		-25			
		-30			
		-35			
		-40			

The Unconfined Compressive Strength (UCS) Failure Mode is indicated by (B-Bulge, S-Shear, P-Penetrometer)
The SPT (N value) is the sum of the last two blow values in each sampling zone (AASHTO T206)

BBS, form 137 (Rev. 8-99)

Illinois Department of Transportation
Division of Highways
GSG Consultants, Inc.

SOIL BORING LOG

Page 1 of 1

Date 10/28/22

ROUTE I-80 DESCRIPTION Retaining Wall No. 7 - Ramp A LOGGED BY AA

SECTION C-91-109-22 LOCATION , SEC. 16, TWP. 35 N, RNG. 10 E,
Latitude , Longitude

COUNTY Will DRILLING RIG Mobile B-57 HAMMER TYPE Auto
DRILLING METHOD HSA HAMMER EFF (%) 89

STRUCT. NO. 099-W127
Station

BORING NO. RWB-58
Station 613+41.20
Offset 60.34ft RT
Ground Surface Elev. 525.45 ft

Surface Water Elev. N/A ft
Stream Bed Elev. N/A ft

Groundwater Elev.:
First Encounter 509.4 ft ▼
Upon Completion N/A ft
After ___ Hrs. N/A ft

Description	Elev.	DEPTH (ft)	BLOWS (/6")	UCS Qu (tsf)	MOIST (%)
4 inches of Asphalt	525.11				
8 inches of Aggregate Subbase	524.45				
Loose to Medium Dense Brown, Moist GRAVEL, with sand and clay seams (GPS)			4		
			11 8		11
			2		
			3 4		13
		-5			
			2		
			2 2		13
	516.95				
Loose to Very Dense Brown, Moist to Wet CLAYEY GRAVEL, trace sand (GC)			1		
			5 11		15
		-10			
			3		
			2 6		16
			8		
			50/3"		16
		-15			
	509.45 ▼				
Loose to Very Dense Gray, Moist to Wet GRAVEL (GP)			50/5"		
					20
			2		
			2 3		12
	505.45	-20			

Description	Elev.	DEPTH (ft)	BLOWS (/6")	UCS Qu (tsf)	MOIST (%)
WEATHERED LIMESTONE	504.45				
Gray LIMESTONE, slightly weathered, slightly fractured Run 1: 21' - 26' Recovery: 87% RQD: 45% (Poor)					
		-25			
	499.45				
Run 2: 26' - 31' Recovery: 100% RQD: 83% (Good)					
		-30			
	494.45				
End of Boring					
		-35			
		-40			

The Unconfined Compressive Strength (UCS) Failure Mode is indicated by (B-Bulge, S-Shear, P-Penetrometer)
The SPT (N value) is the sum of the last two blow values in each sampling zone (AASHTO T206)

BBS, form 137 (Rev. 8-99)

MODEL: Default
FILE NAME: 099W127-62F94-SG-11-Boring Log 1.dgn

SGS 1111 BURLINGTON AVE., SUITE 111 - LISLE, IL 60532 (630) 641-9800

USER NAME = jsandoval	DESIGNED - JSS	REVISED -	
	CHECKED - RRD	REVISED -	
PLOT SCALE = 0:1.9999 ':" / in.	DRAWN - TCK	REVISED -	
PLOT DATE = 10/28/2025	CHECKED - RRD	REVISED -	

STATE OF ILLINOIS
DEPARTMENT OF TRANSPORTATION

BORING LOGS 1 (1 OF 4)
STRUCTURE NO. 099-W127

SHEET SG-11 OF SG-14 SHEETS

F.A.I. RTE.	SECTION	COUNTY	TOTAL SHEETS	SHEET NO.
80	2017-057F	WILL	1342	928
		CONTRACT NO. 62F94		
		ILLINOIS	FED. AID PROJECT	

10/28/2025 9:53:15 AM

PLACE HOLDER FOR FUTURE BORING LOGS

RWB-59

RWB-60

MODEL: Default
FILE NAME: 099W127-62F94-SG-12-Boring Log 2.dgn

SEA
1111 BURLINGTON AVE., SUITE 111 - LISLE, IL 60532
(630) 641-9900

USER NAME = jsandoval	DESIGNED - JSS	REVISED -	
	CHECKED - RRD	REVISED -	
PLOT SCALE = 0:1.9999 ':" / in.	DRAWN - TCK	REVISED -	
PLOT DATE = 10/28/2025	CHECKED - RRD	REVISED -	

STATE OF ILLINOIS
DEPARTMENT OF TRANSPORTATION

BORING LOGS 2 (2 OF 4)
STRUCTURE NO. 099-W127

SHEET SG-12 OF SG-14 SHEETS

F.A.I. RTE.	SECTION	COUNTY	TOTAL SHEETS	SHEET NO.
80	2017-057F	WILL	1342	929
		CONTRACT NO. 62F94		
	ILLINOIS	FED. AID PROJECT		

10/28/2025 9:53:36 AM

PLACE HOLDER FOR FUTURE BORING LOGS

RWB-61

RWB-62

MODEL: Default
FILE NAME: 099W127-62F94-SG-13-Boring Log 3.dgn

SEA
1111 BURLINGTON AVE., SUITE 111 - LISLE, IL 60532
(630) 641-9900

USER NAME = jsandoval	DESIGNED - JSS	REVISED -	
	CHECKED - RRD	REVISED -	
PLOT SCALE = 0:1.9999 ':" / in.	DRAWN - TCK	REVISED -	
PLOT DATE = 10/28/2025	CHECKED - RRD	REVISED -	

STATE OF ILLINOIS
DEPARTMENT OF TRANSPORTATION

BORING LOGS 3 (3 OF 4)
STRUCTURE NO. 099-W127

SHEET SG-13 OF SG-14 SHEETS

F.A.I. RTE.	SECTION	COUNTY	TOTAL SHEETS	SHEET NO.
80	2017-057F	WILL	1342	930
		CONTRACT NO. 62F94		
	ILLINOIS	FED. AID PROJECT		

10/28/2025 9:53:46 AM

PLACE HOLDER FOR FUTURE BORING LOGS

RWB-61

RWB-62

MODEL: Default
FILE NAME: 099W127-62F94-SG-14-Boring Log 4.dgn

SEB
1111 BURLINGTON AVE., SUITE 111 - LISLE, IL 60532
(630) 641-9900

USER NAME = jsandoval	DESIGNED - JSS	REVISED -	
	CHECKED - RRD	REVISED -	
PLOT SCALE = 0:1.9999 ':" / in.	DRAWN - TCK	REVISED -	
PLOT DATE = 10/28/2025	CHECKED - RRD	REVISED -	

STATE OF ILLINOIS
DEPARTMENT OF TRANSPORTATION

BORING LOGS 4 (4 OF 4)
STRUCTURE NO. 099-W127

SHEET SG-14 OF SG-14 SHEETS

F.A.I. RTE.	SECTION	COUNTY	TOTAL SHEETS	SHEET NO.
80	2017-057F	WILL	1342	931
		CONTRACT NO. 62F94		
	ILLINOIS	FED. AID PROJECT		

10/28/2025 9:53:57 AM

Benchmark: Iron Rod with Cap Sta. 67+63.19, 388.39' RT
N 1,764,330.037 and E 1,052,698.888
Elev.= 550.720
Existing Structures: None.
Traffic Control: EB I-80 and SB Chicago St. Traffic will be detoured to the east at Richards St. during construction.
No Salvage.

∗ Measured along F.F. of Wall

DESIGN SPECIFICATIONS

2020 AASHTO LRFD Bridge Design Specifications, 9th Edition

DESIGN STRESSES

FIELD UNITS

f'c = 4,000 psi (Anchorage Slab and Barrier)
f'c = 3,500 psi (Retaining Wall)
fy = 60,000 psi (Reinforcement)
fy = 50,000 psi (M270 Grade 50) Soldier Piles

NOTES:

1. Stations and offsets are measured from the ℄ of Ramp AA to the front face of cast-in-place concrete facing.
2. For General Notes, Index of Sheets, Profile Grade, Curve Data and Total Bill of Material, see Sheet SH-02.
3. The Contractor shall exercise extreme caution during wall construction to make certain that the construction activities will not have detrimental effects on the adjacent utilities and other facilities.
4. "C1" in Plan view denotes wall Control Point - Number 1

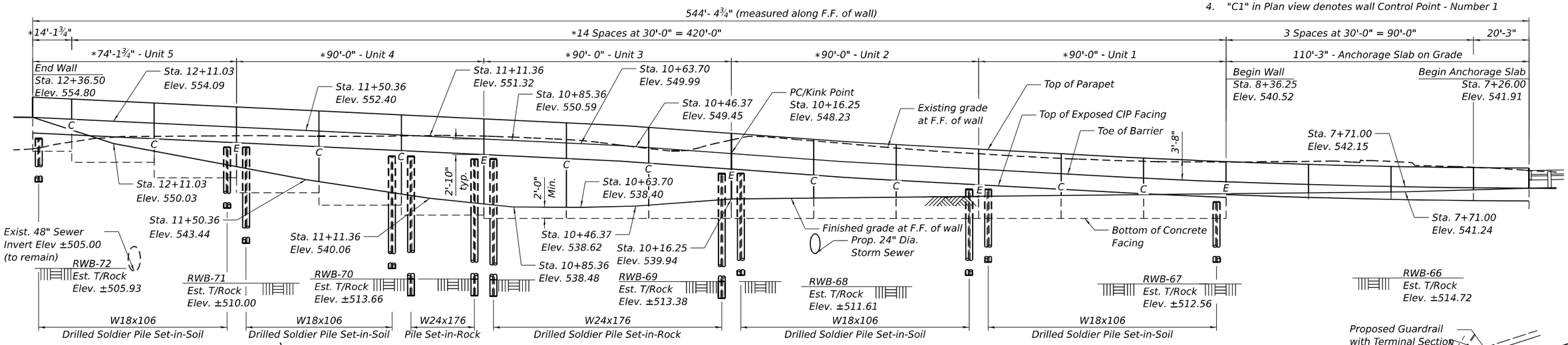

ELEVATION

(Looking at Front Face of Wall)

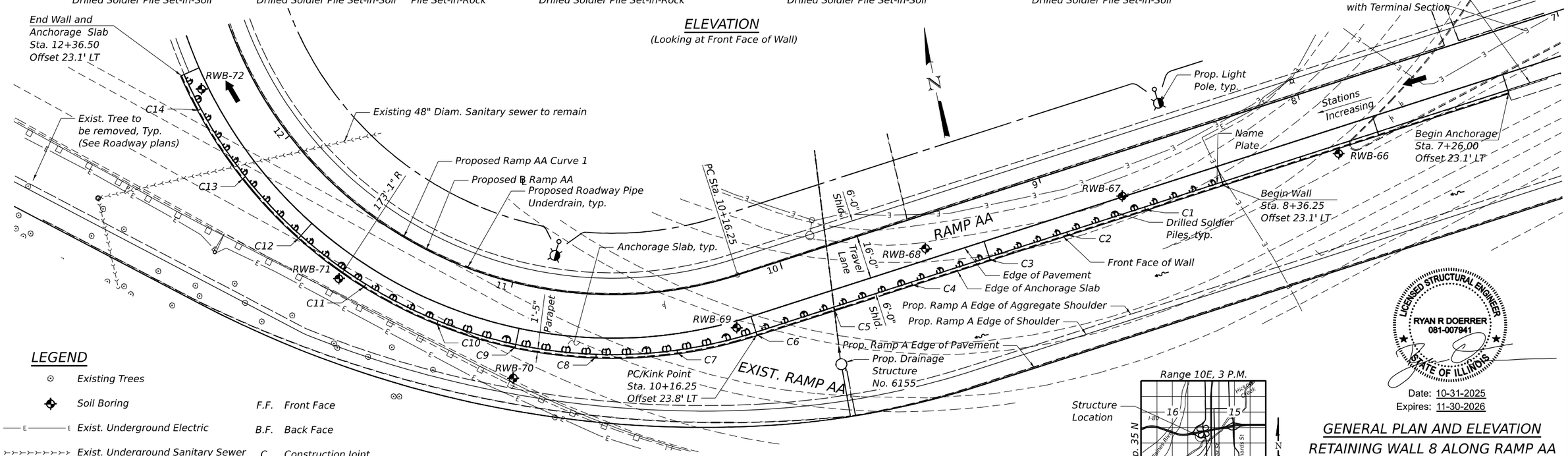

PLAN

LEGEND

- Existing Trees
- Soil Boring
- Exist. Underground Electric
- Exist. Underground Sanitary Sewer
- Prop. Pipe Underdrain
- Prop. Lighting
- Prop. Storm Sewer

F.F. Front Face
B.F. Back Face
C Construction Joint
E Expansion Joint

APPROVED
For Structural Adequacy Only
Engineer of Bridges & Structures

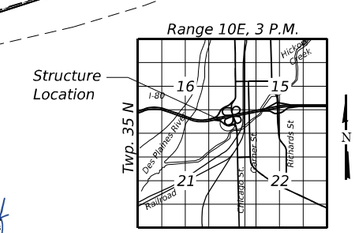

LOCATION SKETCH

LICENSED STRUCTURAL ENGINEER
RYAN R DOERRER
081-007941
STATE OF ILLINOIS

Date: 10-31-2025
Expires: 11-30-2026

GENERAL PLAN AND ELEVATION
RETAINING WALL 8 ALONG RAMP AA
F.A.I. RTE. 80 - SEC. 2017-057F
WILL COUNTY
STA. 8+36.25 TO STA. 12+36.50
STRUCTURE NO. 099-W121

MODEL: Default
FILE NAME: 099W121-62F94-SH-01-GPE.dgn

SEB
1111 BURLINGTON AVE., SUITE 111 - LISLE, IL 60532
(630) 641-9800

USER NAME = jsandoval	DESIGNED - JSS	REVISED -	
	CHECKED - RRD	REVISED -	
PLOT SCALE = 0:0.1667 ':' / in.	DRAWN - TCK	REVISED -	
PLOT DATE = 10/28/2025	CHECKED - RRD	REVISED -	

STATE OF ILLINOIS
DEPARTMENT OF TRANSPORTATION

SHEET SH-01 OF SH-22 SHEETS

F.A.I. RTE.	SECTION	COUNTY	TOTAL SHEETS	SHEET NO.
80	2017-057F	WILL	1342	932
		CONTRACT NO. 62F94		
		ILLINOIS	FED. AID PROJECT	

10/28/2025 9:54:17 AM

GENERAL NOTES:

1. Reinforcement bars designated (E) shall be epoxy coated.
2. Slipforming of the parapets is not allowed.
3. The contractor is responsible for the design and performance of the lagging using no less than a 3-inch nominal rough-sawn thickness and timber with a minimum allowable bending stress of 1,000 psi.
4. No field welding is permitted except as specified in the contract documents.
5. Any storage of construction equipment and material behind the wall is not allowed.
6. Concrete sealer shall be applied to exposed surfaces of the new wall and back face of anchorage slab.
7. Protective coat shall be applied to top of anchorage slab, front face of barrier, and top of barrier.
8. The Contractor shall field-verify locations of existing underground utilities prior to beginning work. Existing utilities in conflict with retaining wall construction shall be abandoned or relocated according to directions given on the Civil Plans. The Contractor shall take all necessary precautions to protect existing utilities to remain during all stages of construction. Any damage to existing utilities to remain caused by the Contractor in the performance of the work shall be repaired by the Contractor, to the satisfaction of the Engineer, at no cost to the Department.
9. Coordinate Drainage Structure Number 6155 installation with wall construction.
10. The Pipe Underdrains for Structures, 4” shall be sloped to drain towards Drainage Structure 6155. A non- perforated pipe per Section 601 shall be used to connect the Pipe Underdrain for Structure to Drainage Structure 6155. Cost included in Pipe Underdrain for Structures, 4”.
11. Excavation limits included in Structure Excavation are measured vertically from the bottom of the concrete facing to the top of the concrete facing and measured horizontally 2’-0” from the concrete facing front face. Excavation required for the concrete facing will be included in the cost of Concrete Structures. Excavation required for Pipe Underdrain will be included in the cost of Pipe Underdrains for Structures, 4”.

SUGGESTED SEQUENCE OF CONSTRUCTION

1. Locate all existing utilities. The Contractor shall coordinate any required improvements to, or removals of existing utilities with utility owner(s) and IDOT.
2. Drill shaft excavations for Soldier Piles to specified bottom elevations maintaining required tolerances and hole stability.
3. Remove loose material and excess water from excavated shafts. Place Soldier Piles in holes and properly locate and brace.
4. Place Encasement Concrete in the holes to the level of the base of the proposed Concrete Facing, then place Controlled Low Strength Material (C.L.S.M) to the existing ground surface.
5. After concrete has been placed, excavate the soil in front of the wall to proposed grade with simultaneous removal of C.L.S.M. at the face of the Soldier Piles and place lagging as specified.
6. Construct wall drainage features at the base of the wall.
7. Place shear studs on Soldier Piles and construct Concrete Facing.
8. Complete final grading at the base of the wall.
9. Construct anchorage slab and barrier.

INDEX OF SHEETS

TOTAL BILL OF MATERIAL

ITEM	UNIT	TOTAL
Structure Excavation	Cu. Yd.	259.0
Concrete Structures	Cu. Yd.	130.4
Concrete Superstructure	Cu. Yd.	430.0
Protective Coat	Sq. Yd.	630
Stud Shear Connectors	Each	878
Reinforcement Bars, Epoxy Coated	Pound	63,990
Name Plates	Each	1
Furnishing Soldier Piles (W Section)	Foot	1,580
Drilling and Setting Soldier Piles (In Soil)	Cu. Ft.	8,853
Drilling and Setting Soldier Piles (In Rock)	Cu. Ft.	679
Untreated Timber Lagging	Sq. Ft.	2,648
Concrete Sealer	Sq. Ft.	6.332
Geocomposite Wall Drain	Sq. Yd.	226
Pipe Underdrains for Structures, 4"	Foot	453

WALL ELEVATIONS TABLE

Location	Station	Offset from ℄ Ramp A	A Toe of Barrier	B Top of Prop. Exposed CIP Facing	C Finished Grade at F. F. of Wall	D Existing Grade at F. F. of Wall
Begin Wall	8+36.25	23.08' Lt	543.06	540.35	540.90	546.66
C1	8+66.25	23.08' Lt	543.71	541.00	540.74	546.81
C2	8+96.25	23.08' Lt	544.50	541.78	540.58	547.31
C3	9+26.25	23.08' Lt	545.34	542.63	540.42	548.17
C4	9+56.25	23.08' Lt	546.17	543.45	540.26	549.18
C5	9+86.25	23.08' Lt	547.12	544.41	540.10	550.50
C6	10+16.25	23.08' Lt	548.24	545.53	539.85	550.66
C7	10+42.25	23.08' Lt	549.29	546.58	538.83	549.14
C8	10+68.25	23.08' Lt	550.12	547.41	538.43	550.74
C9	10+94.25	23.08' Lt	550.84	548.13	539.02	551.38
C10	11+20.25	23.08' Lt	551.57	548.86	540.83	551.41
C11	11+46.25	23.08' Lt	552.29	549.57	543.09	551.35
C12	11+72.25	23.08' Lt	553.01	550.30	545.82	551.44
C13	11+98.25	23.08' Lt	553.73	551.02	548.65	551.33
C14	12+24.25	23.08' Lt	554.46	551.75	552.50	550.32
End Wall	12+36.50	23.08' Lt	554.80	552.09	554.80	549.07

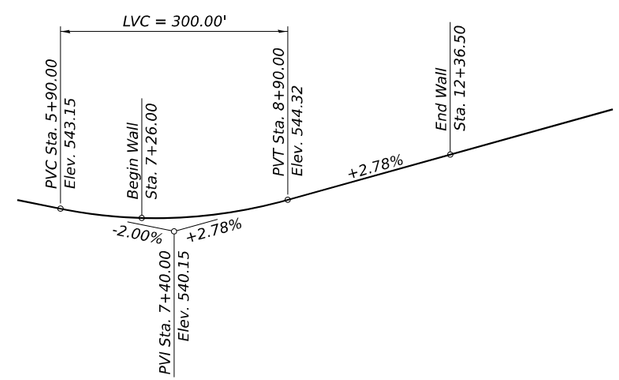

RAMP AA PROFILE GRADE

(Along Prop. ℄ Ramp AA)

PR RAMP AA CURVE 1

P.I. Sta. = 15+93.65
Δ = 150°52'29" (RT)
D = 38°11'50"
R = 150.00'
T = 577.40'
L = 394.99'
E = 446.57'
e = 6.0%
P.C. Sta. = 10+16.25
P.T. Sta. = 14+11.24

STA. 8+36.25 TO 12+36.50
BUILT 20-- BY
STATE OF ILLINOIS
F.A.I. Rt. 80 Sec. 2017-057F
LOADING HL-93
STR. NO. 099-W121

NAME PLATE

See Std. 515001

MODEL: Default
FILE NAME: 099W121-62F94-SH-02-GenNotesandBOM.dgn

SEA
1111 BURLINGTON AVE., SUITE 111 - LISLE, IL 60532
(630) 641-9900

USER NAME = jsandoval	DESIGNED - JSS	REVISED -	
	CHECKED - RRD	REVISED -	
PLOT SCALE = 0:0.1667 ':' / in.	DRAWN - TCK	REVISED -	
PLOT DATE = 10/28/2025	CHECKED - RRD	REVISED -	

STATE OF ILLINOIS
DEPARTMENT OF TRANSPORTATION

GENERAL DATA
STRUCTURE NO. 099-W121

SHEET SH-02 OF SH-22 SHEETS

F.A.I. RTE.	SECTION	COUNTY	TOTAL SHEETS	SHEET NO.
80	2017-057F	WILL	1342	933
		CONTRACT NO. 62F94		
	ILLINOIS	FED. AID PROJECT		

10/28/2025 9:54:28 AM

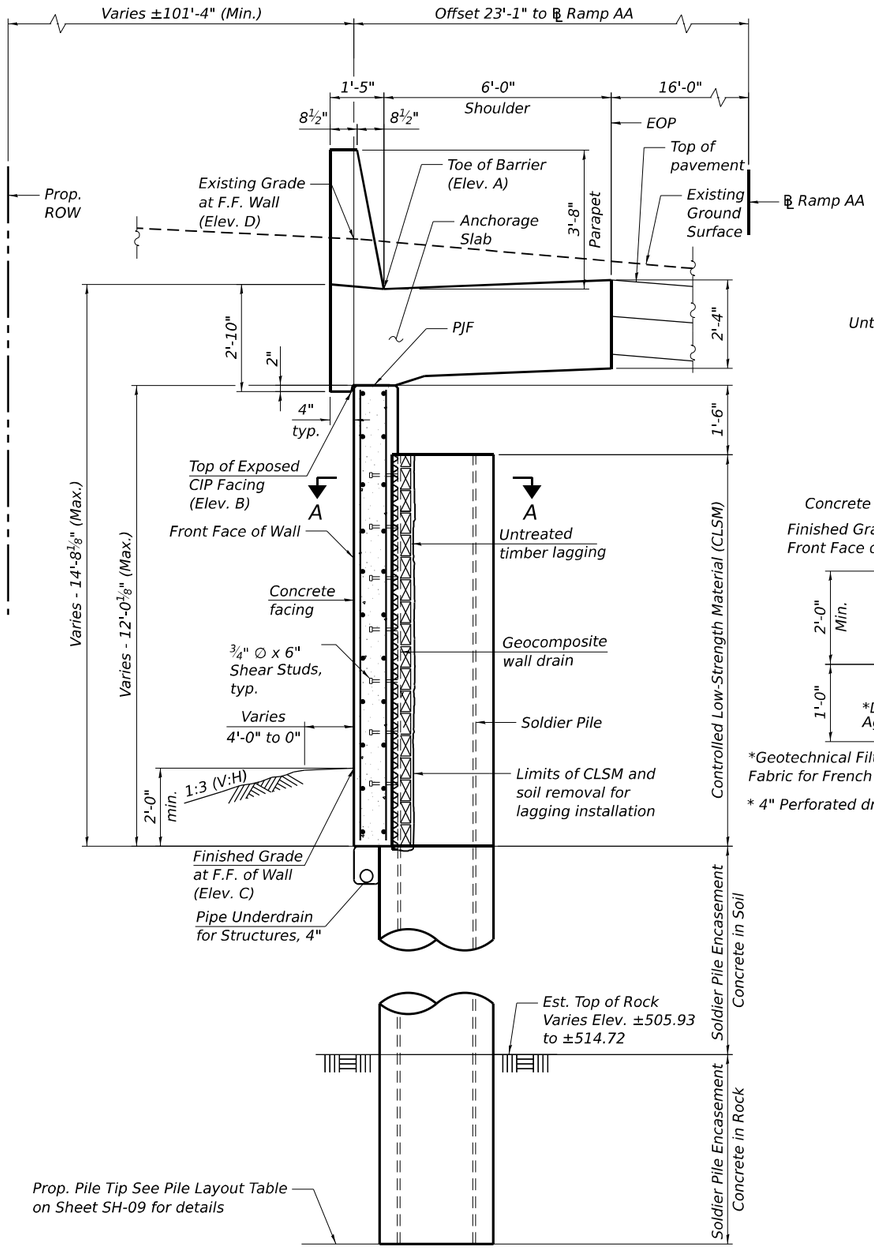

TYPICAL SECTION THRU SOLDIER PILE

(Looking West)
(Sta. 8+36.25 to Sta. 12+36.50)

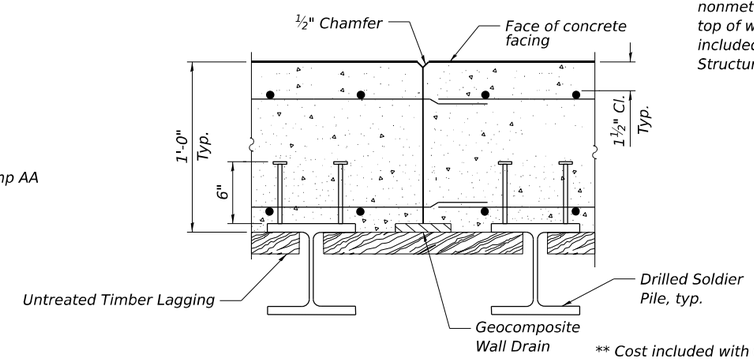

CONSTRUCTION JOINT DETAILS

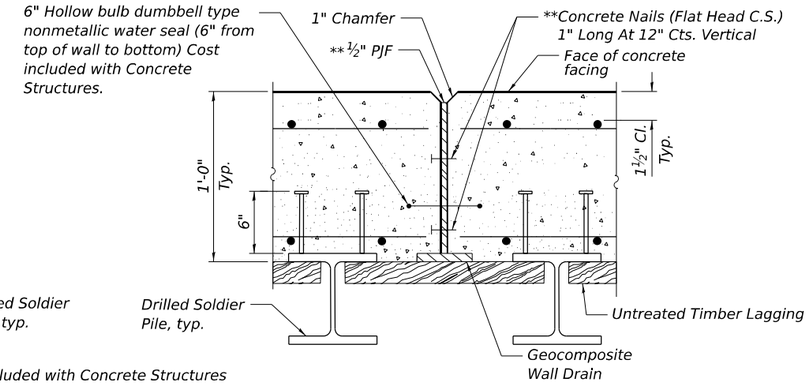

** Cost included with Concrete Structures

EXPANSION JOINT DETAILS

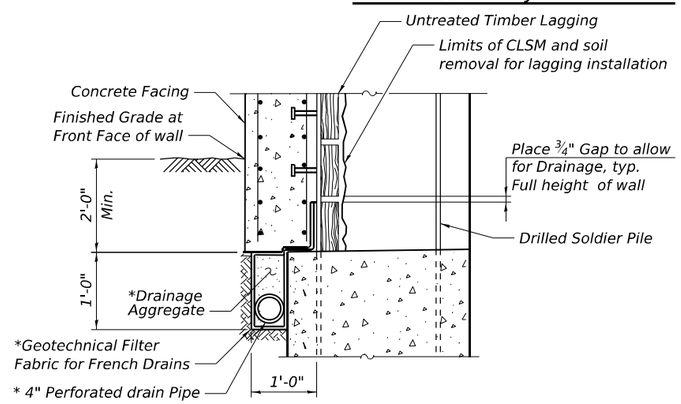

PIPE UNDERDRAIN DETAIL AT SOLDIER PILE

* Included in the cost of Pipe Underdrains for Structures, 4"

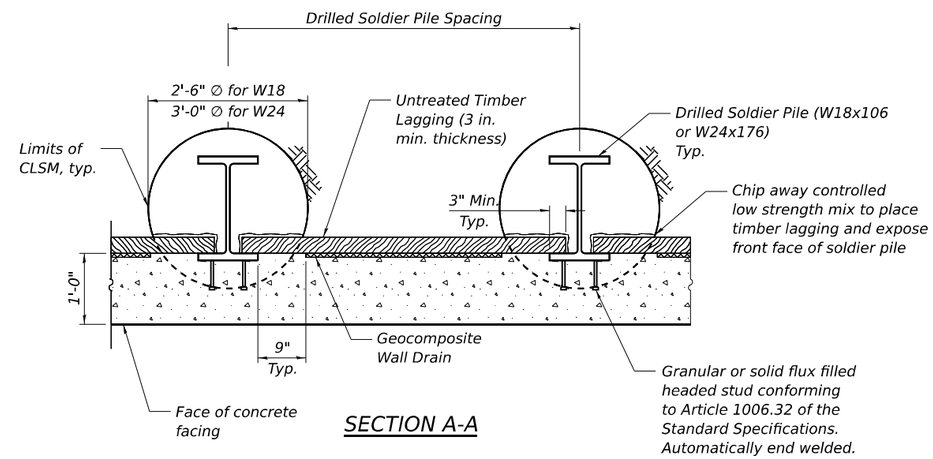

SECTION A-A

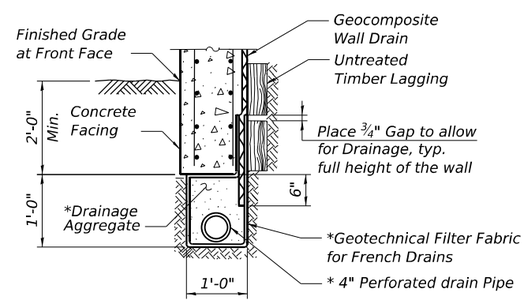

PIPE UNDERDRAIN DETAIL BETWEEN SOLDIER PILES

* Included in the cost of Pipe Underdrains for Structures, 4"
Pipe Underdrains shall tie into drainage structure number 6155.
The drain pipe will outlet at approximately Sta. 90+90.00

MODEL: Default
FILE NAME: 099W121-62F94-SH-03-Sec&Details.dgn

SEB
1111 BURLINGTON AVE., SUITE 111 - LISLE, IL 60532
(630) 641-9900

USER NAME = jsandoval	DESIGNED - JSS	REVISED -	
	CHECKED - RRD	REVISED -	
PLOT SCALE = 0:0.1667 ':' / in.	DRAWN - TCK	REVISED -	
PLOT DATE = 10/28/2025	CHECKED - RRD	REVISED -	

STATE OF ILLINOIS
DEPARTMENT OF TRANSPORTATION

WALL CROSS SECTION AND DETAILS
STRUCTURE NO. 099-W121

SHEET SH-03 OF SH-22 SHEETS

F.A.I. RTE.	SECTION	COUNTY	TOTAL SHEETS	SHEET NO.
80	2017-057F	WILL	1342	934
		CONTRACT NO. 62F94		
	ILLINOIS	FED. AID PROJECT		

10/28/2025 9:54:39 AM

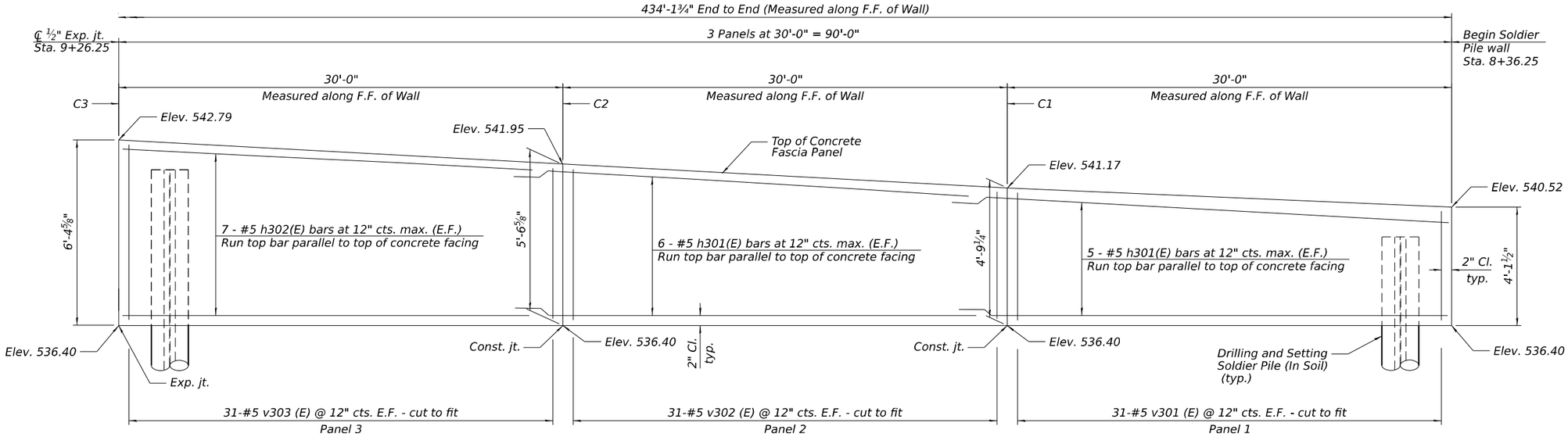

PARTIAL ELEVATION

(Looking at Front Face of Wall)

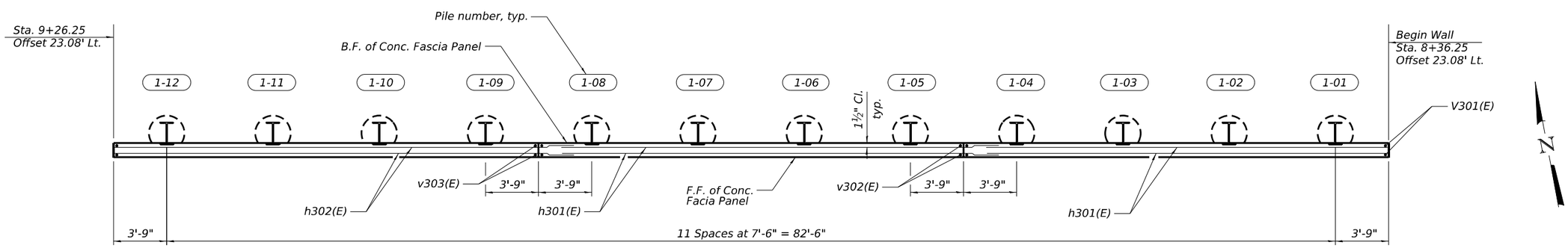

PARTIAL PLAN

NOTES:

1. Stations and offsets are measured from the ℄ of Ramp AA to the front face of cast-in-place concrete facing.
2. All dimensions are along F.F. of wall.
3. For typical wall cross sections and section details, see Sheets SH-03.
4. For Soldier Pile Layout Table and Bill of Material, see Sheet SH-09.

MIN. BAR LAPS

#5 bar = 3'-7"

LEGEND

E.F. - Each Face
F.F. - Front Face
B.F. Back Face

MODEL: Default
FILE NAME: 099W121-62F94-SH-04-Plan-Elev1.dgn

SEB
1111 BURLINGTON AVE., SUITE 111 - LISLE, IL 60532
(630) 641-9900

USER NAME = jsandoval	DESIGNED - JSS	REVISED -	
	CHECKED - RRD	REVISED -	
PLOT SCALE = 0:0.1667 ':' / in.	DRAWN - TCK	REVISED -	
PLOT DATE = 10/28/2025	CHECKED - RRD	REVISED -	

STATE OF ILLINOIS
DEPARTMENT OF TRANSPORTATION

PLAN AND ELEVATION UNIT 1
STRUCTURE NO. 099-W121

SHEET SH-04 OF SH-22 SHEETS

F.A.I. RTE.	SECTION	COUNTY	TOTAL SHEETS	SHEET NO.
80	2017-057F	WILL	1342	935
		CONTRACT NO. 62F94		
	ILLINOIS	FED. AID PROJECT		

10/28/2025 9:54:55 AM

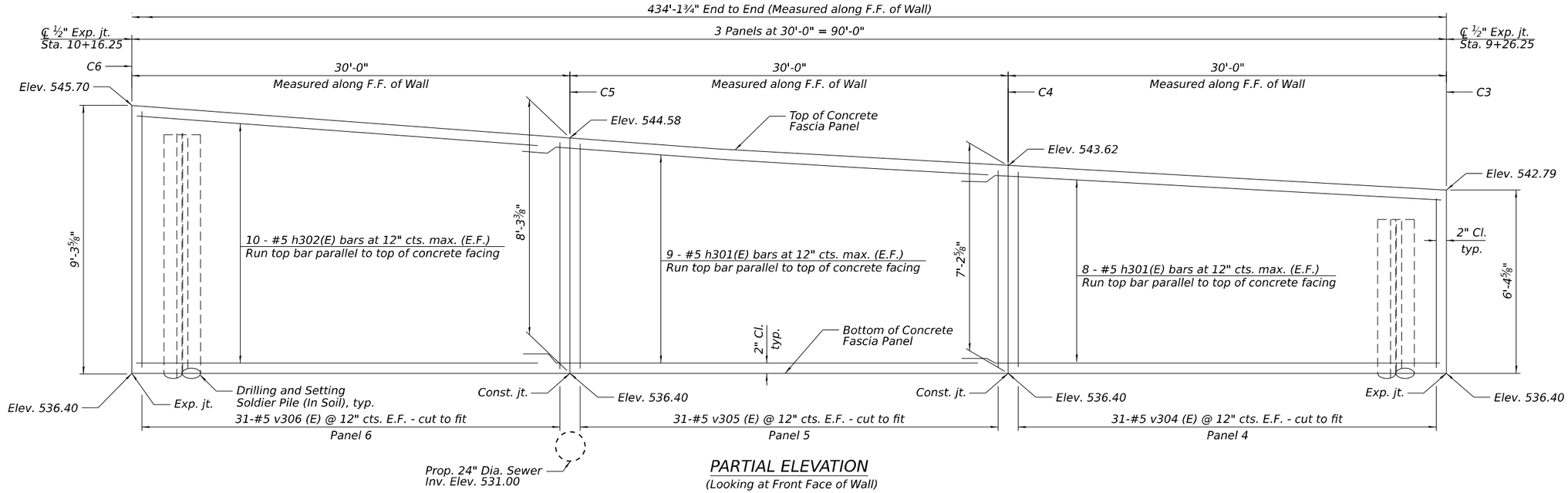

PARTIAL ELEVATION

(Looking at Front Face of Wall)

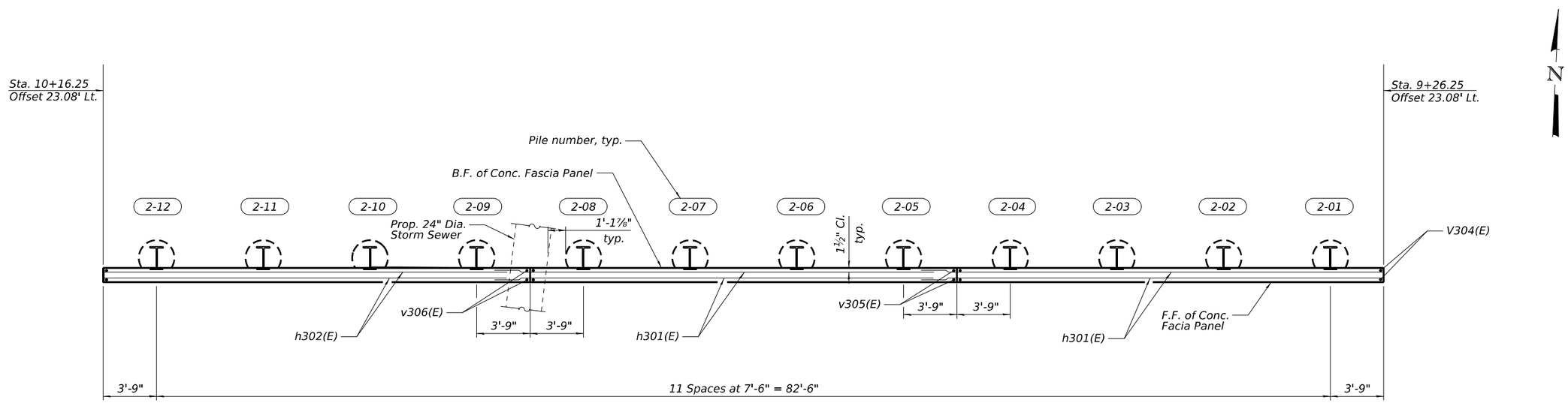

PARTIAL PLAN

MIN. BAR LAPS

#5 bar = 3'-7"

LEGEND

E.F. - Each Face
F.F. - Front Face
B.F. Back Face

NOTE:

1. For Notes, see Sheet SH-04.

MODEL: Default
FILE NAME: 099W121-62F94-SH-05-Plan-Elev2.dgn

SEB
1111 BURLINGTON AVE., SUITE 111 - LISLE, IL 60532
(630) 641-9900

USER NAME = jsandoval	DESIGNED - JSS	REVISED -	
	CHECKED - RRD	REVISED -	
PLOT SCALE = 0:0.1667 ':' / in.	DRAWN - TCK	REVISED -	
PLOT DATE = 10/28/2025	CHECKED - RRD	REVISED -	

STATE OF ILLINOIS
DEPARTMENT OF TRANSPORTATION

PLAN AND ELEVATION UNIT 2
STRUCTURE NO. 099-W121

SHEET SH-05 OF SH-22 SHEETS

F.A.I. RTE.	SECTION	COUNTY	TOTAL SHEETS	SHEET NO.
80	2017-057F	WILL	1342	936
		CONTRACT NO. 62F94		
	ILLINOIS	FED. AID PROJECT		

10/28/2025 9:55:06 AM

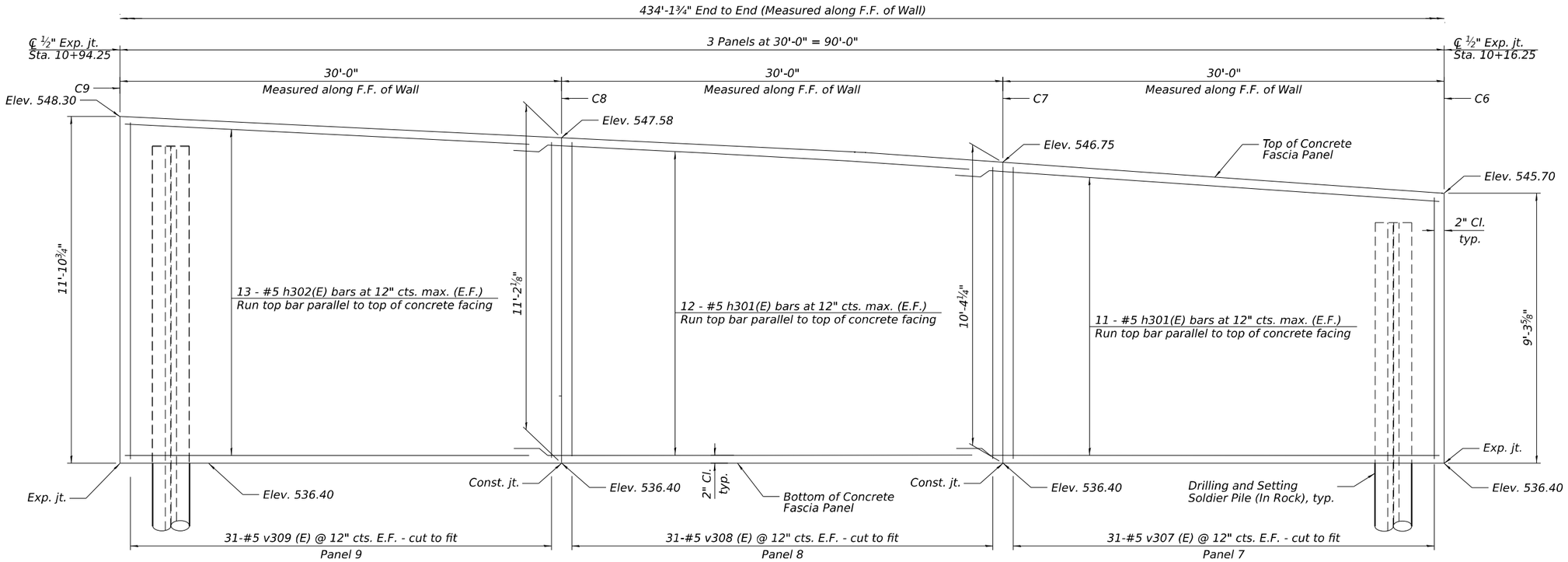

PARTIAL ELEVATION

(Looking at Front Face of Wall)

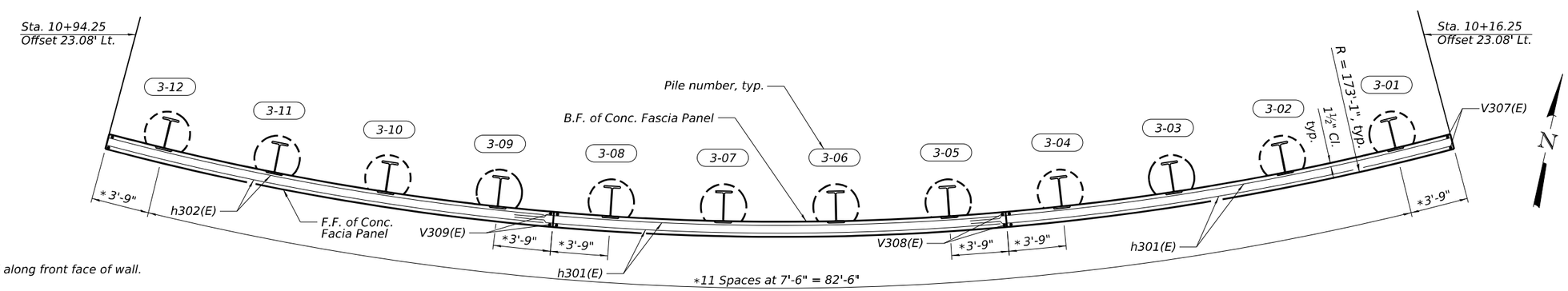

* measured along front face of wall.

PARTIAL PLAN

NOTES:

1. For Notes, see Sheet SH-04.

MIN. BAR LAPS

#5 bar = 3'-7"

LEGEND

E.F. - Each Face
F.F. - Front Face
B.F. Back Face

MODEL: Default
FILE NAME: 099W121-62F94-SH-06-Plan-Elev3.dgn

SEB
1111 BURLINGTON AVE., SUITE 111 - LISLE, IL 60532
(630) 641-9900

USER NAME = jsandoval	DESIGNED - JSS	REVISED -	
	CHECKED - RRD	REVISED -	
PLOT SCALE = 0:0.1667 ':' / in.	DRAWN - TCK	REVISED -	
PLOT DATE = 10/28/2025	CHECKED - RRD	REVISED -	

STATE OF ILLINOIS
DEPARTMENT OF TRANSPORTATION

PLAN AND ELEVATION UNIT 3
STRUCTURE NO. 099-W121

SHEET SH-06 OF SH-22 SHEETS

F.A.I. RTE.	SECTION	COUNTY	TOTAL SHEETS	SHEET NO.
80	2017-057F	WILL	1342	937
		CONTRACT NO. 62F94		
	ILLINOIS	FED. AID PROJECT		

10/28/2025 9:55:20 AM

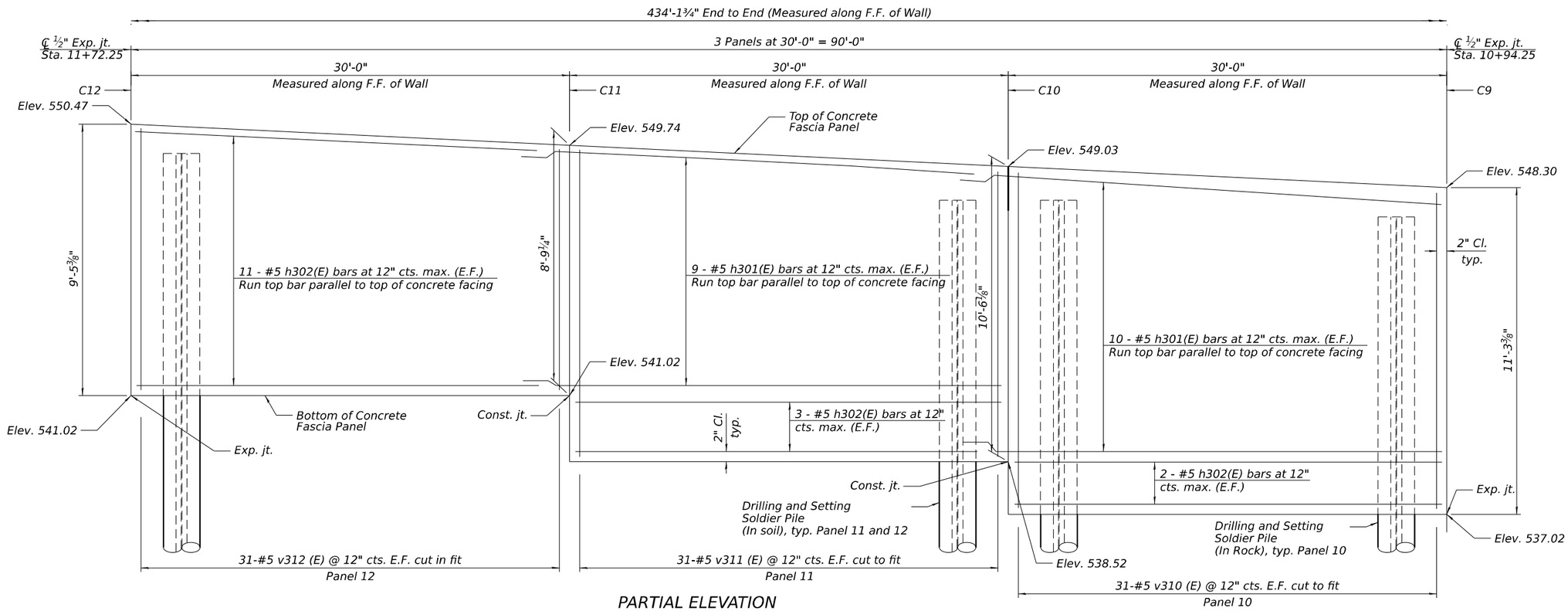

PARTIAL ELEVATION

(Looking at Front Face of Wall)

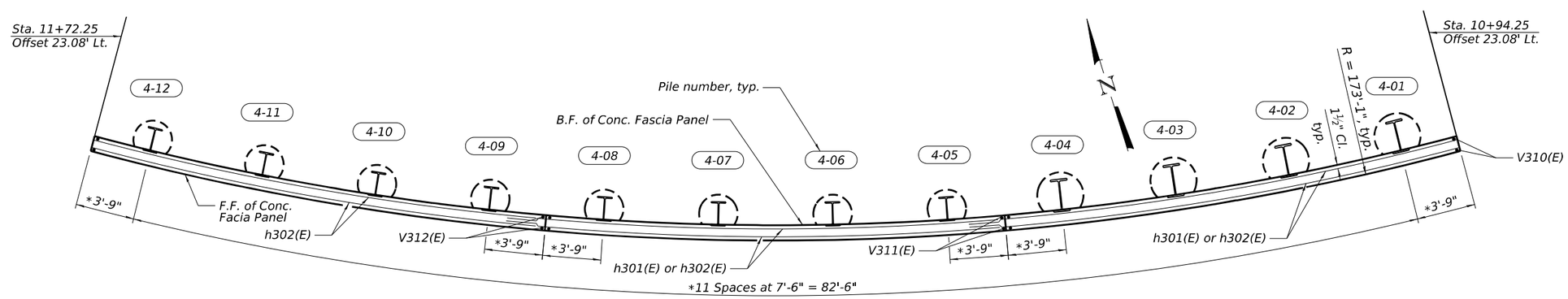

* measured along front face of wall.

PARTIAL PLAN

MIN. BAR LAPS

#5 bar = 3'-7"

NOTE:

1. For notes see sheet SH-04.

LEGEND

E.F. - Each Face
F.F. - Front Face
B.F. Back Face

MODEL: Default
FILE NAME: 099W121-62F94-SH-07-Plan-Elev4.dgn

SGD
1111 BURLINGTON AVE., SUITE 111 - LISLE, IL 60532
(630) 641-9800

USER NAME = jsandoval	DESIGNED - JSS	REVISED -	
	CHECKED - RRD	REVISED -	
PLOT SCALE = 0:0.1667 ':' / in.	DRAWN - TCK	REVISED -	
PLOT DATE = 10/28/2025	CHECKED - RRD	REVISED -	

STATE OF ILLINOIS
DEPARTMENT OF TRANSPORTATION

PLAN AND ELEVATION UNIT 4
STRUCTURE NO. 099-W121

SHEET SH-07 OF SH-22 SHEETS

F.A.I. RTE.	SECTION	COUNTY	TOTAL SHEETS	SHEET NO.
80	2017-057F	WILL	1342	938
		CONTRACT NO. 62F94		
		ILLINOIS	FED. AID PROJECT	

10/28/2025 9:55:34 AM

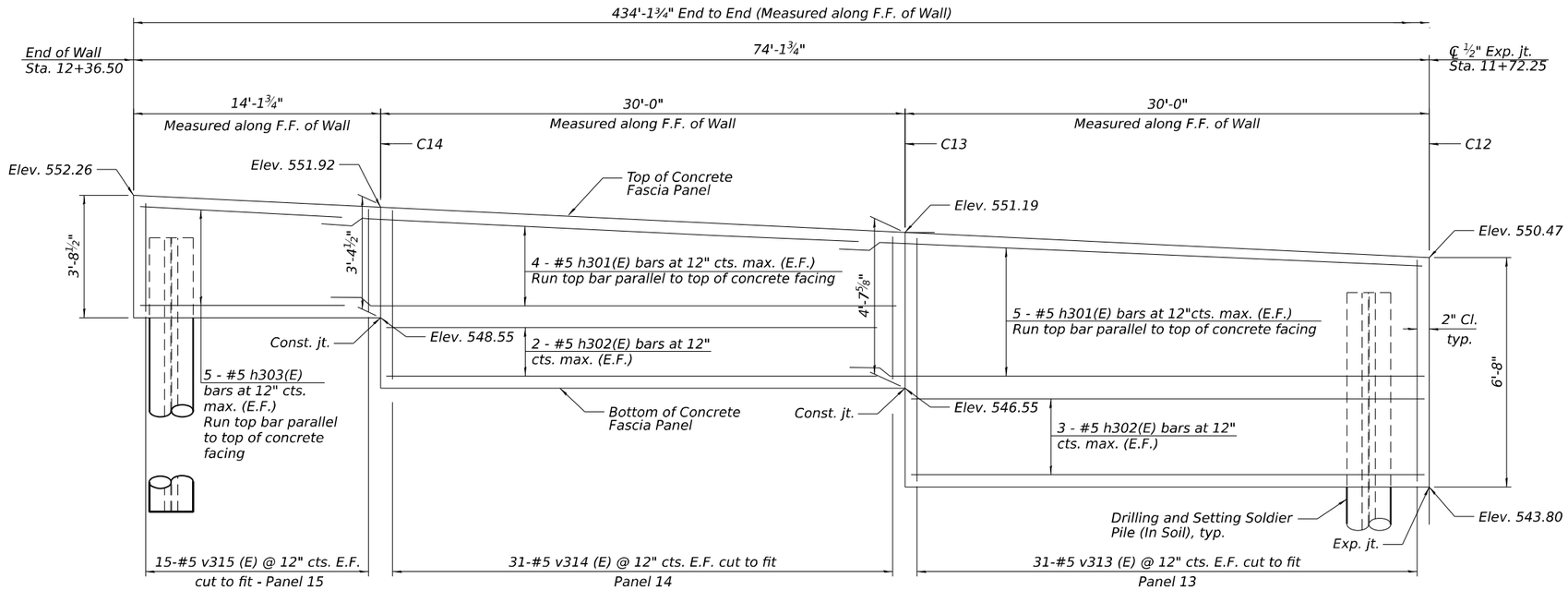

PARTIAL ELEVATION

(Looking at Front Face of Wall)

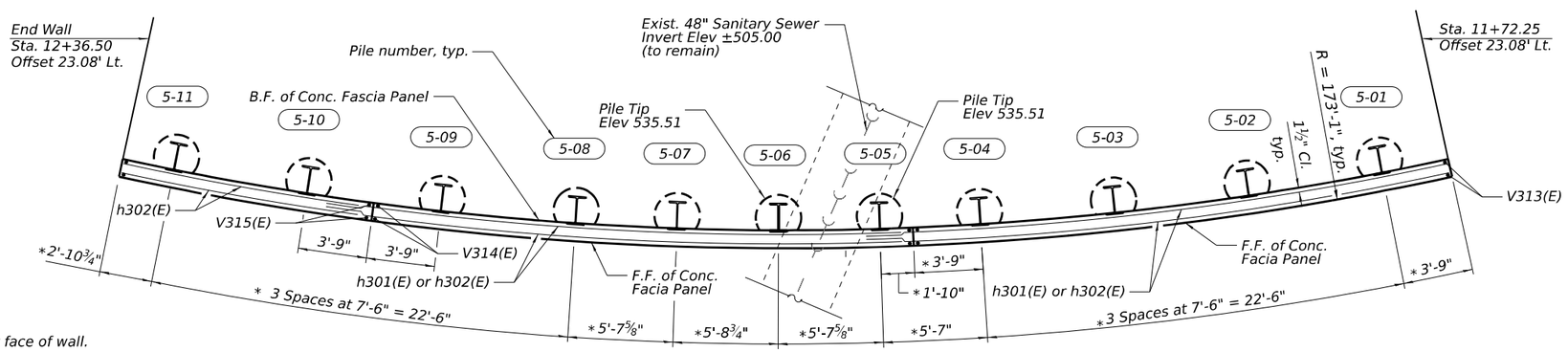

* measured along front face of wall.

PARTIAL PLAN

NOTE:

1. For notes see Sheet SH-04.

MIN. BAR LAPS

#5 bar = 3'-7"

LEGEND

E.F. - Each Face
F.F. - Front Face
B.F. Back Face

MODEL: Default
FILE NAME: 099W121-62F94-SH-08-Plan-Elev5.dgn

SEB
1111 BURLINGTON AVE., SUITE 111 - LISLE, IL 60532
(630) 641-9900

USER NAME = jsandoval	DESIGNED - JSS	REVISED -	
	CHECKED - RRD	REVISED -	
PLOT SCALE = 0:0.1667 ':' / in.	DRAWN - TCK	REVISED -	
PLOT DATE = 10/28/2025	CHECKED - RRD	REVISED -	

STATE OF ILLINOIS
DEPARTMENT OF TRANSPORTATION

PLAN AND ELEVATION UNIT 5
STRUCTURE NO. 099-W121

SHEET SH-08 OF SH-22 SHEETS

F.A.I. RTE.	SECTION	COUNTY	TOTAL SHEETS	SHEET NO.
80	2017-057F	WILL	1342	939
		CONTRACT NO. 62F94		
	ILLINOIS	FED. AID PROJECT		

10/28/2025 9:55:46 AM

PILE LAYOUT

Pile	Station	Offset	Top of Pile Elev.	Top of Encasement	Section	Estimated Top of Rock Elev.	Minimum Pile Tip Elev.	Pile Length	Drilled Hole Diameter	No. Shear Studs
1-01	8+40.00	21.38' Rt	539.10	536.40	W18X106	513.44	520.50	18'-8''	2'-6''	8
1-02	8+47.50	21.38' Rt	539.26	536.40	W18X106	513.24	520.50	18'-10''	2'-6''	8
1-03	8+55.00	21.38' Rt	539.42	536.40	W18X106	513.04	520.50	19'-0'	2'-6''	8
1-04	8+62.50	21.38' Rt	539.59	536.40	W18X106	512.84	520.50	19'-2''	2'-6''	8
1-05	8+70.00	21.38' Rt	539.77	536.40	W18X106	512.63	520.50	19'-4''	2'-6''	8
1-06	8+77.50	21.38' Rt	539.96	536.40	W18X106	512.50	520.50	19'-6''	2'-6''	10
1-07	8+85.00	21.38' Rt	540.16	536.40	W18X106	512.40	520.50	19'-8''	2'-6''	10
1-08	8+92.50	21.38' Rt	540.36	536.40	W18X106	512.31	520.50	19'-11''	2'-6''	10
1-09	9+00.00	21.38' Rt	540.56	536.40	W18X106	512.21	520.50	20'-1''	2'-6''	10
1-10	9+07.50	21.38' Rt	540.77	536.40	W18X106	512.12	520.50	20'-4''	2'-6''	10
1-11	9+15.00	21.38' Rt	540.98	536.40	W18X106	512.02	520.50	20'-6''	2'-6''	12
1-12	9+22.50	21.38' Rt	541.19	536.40	W18X106	511.93	520.50	20'-9''	2'-6''	12
2-01	9+30.00	21.38' Rt	541.40	536.40	W18X106	511.83	515.70	25'-9''	2'-6''	12
2-02	9+37.50	21.38' Rt	541.60	536.40	W18X106	511.74	515.70	25'-11''	2'-6''	12
2-03	9+45.00	21.38' Rt	541.81	536.40	W18X106	511.64	515.70	26'-2''	2'-6''	12
2-04	9+52.50	21.38' Rt	542.02	536.40	W18X106	511.73	515.70	26'-4''	2'-6''	14
2-05	9+60.00	21.38' Rt	542.24	536.40	W18X106	511.91	515.70	26'-7''	2'-6''	14
2-06	9+67.50	21.38' Rt	542.48	536.40	W18X106	512.09	515.70	26'-10''	2'-6''	14
2-07	9+75.00	21.38' Rt	542.72	536.40	W18X106	512.26	515.70	27'-1''	2'-6''	14
2-08	9+82.50	21.38' Rt	542.94	536.40	W18X106	512.44	515.70	27'-3''	2'-6''	16
2-09	9+90.00	21.38' Rt	543.22	536.40	W18X106	512.62	515.70	27'-7''	2'-6''	16
2-10	9+97.50	21.38' Rt	543.50	536.40	W18X106	512.80	515.70	27'-10''	2'-6''	16
2-11	10+05.00	21.38' Rt	543.78	536.40	W18X106	512.98	515.70	28'-1''	2'-6''	16
2-12	10+12.50	21.38' Rt	544.06	536.40	W18X106	513.16	515.70	28'-5''	2'-6''	18
3-01	10+19.50	21.15' Rt	544.33	536.40	W24X176	513.32	507.32	37'-1''	3'-0''	18
3-02	10+26.00	21.15' Rt	544.60	536.40	W24X176	513.40	507.40	37'-3''	3'-0''	18
3-03	10+32.50	21.15' Rt	544.86	536.40	W24X176	513.42	507.42	37'-6''	3'-0''	18
3-04	10+39.00	21.15' Rt	545.12	536.40	W24X176	513.45	507.45	37'-9''	3'-0''	20
3-05	10+45.50	21.15' Rt	545.35	536.40	W24X176	513.48	507.48	37'-11''	3'-0''	20
3-06	10+52.00	21.15' Rt	545.56	536.40	W24X176	513.51	507.51	38'-1''	3'-0''	20
3-07	10+58.50	21.15' Rt	545.77	536.40	W24X176	513.53	507.53	38'-3''	3'-0''	20
3-08	10+65.00	21.15' Rt	545.98	536.40	W24X176	513.56	507.56	38'-5''	3'-0''	22
3-09	10+71.50	21.15' Rt	546.17	536.40	W24X176	513.59	507.59	38'-7''	3'-0''	22
3-10	10+78.00	21.15' Rt	546.35	536.40	W24X176	513.62	507.62	38'-9''	3'-0''	22
3-11	10+84.50	21.15' Rt	546.53	536.40	W24X176	513.64	507.64	38'-11''	3'-0''	22
3-12	10+91.00	21.15' Rt	546.71	536.40	W24X176	513.53	507.53	39'-3''	3'-0''	22
4-01	10+97.50	21.15' Rt	546.89	537.02	W24X176	513.17	507.17	39'-9''	3'-0''	22
4-02	11+04.00	21.15' Rt	547.07	537.02	W24X176	512.82	506.82	40'-4''	3'-0''	22
4-03	11+10.50	21.15' Rt	547.25	537.02	W24X176	512.46	506.46	40'-10''	3'-0''	22
4-04	11+17.00	21.15' Rt	547.43	537.02	W24X176	512.10	506.10	41'-4''	3'-0''	22
4-05	11+23.50	21.38' Rt	547.62	538.52	W18X106	511.75	515.42	32'-3''	2'-6''	20
4-06	11+30.00	21.38' Rt	547.79	538.52	W18X106	511.39	515.42	32'-5''	2'-6''	20
4-07	11+36.50	21.38' Rt	547.97	538.52	W18X106	511.03	515.42	32'-7''	2'-6''	20
4-08	11+43.00	21.38' Rt	548.15	538.52	W18X106	510.68	515.42	32'-9''	2'-6''	22
4-09	11+49.50	21.38' Rt	548.33	541.02	W18X106	510.32	522.72	25'-8''	2'-6''	16
4-10	11+56.00	21.38' Rt	548.52	541.02	W18X106	509.96	522.72	25'-10''	2'-6''	16
4-11	11+62.50	21.38' Rt	548.70	541.02	W18X106	509.61	522.72	26'-0'	2'-6''	18
4-12	11+69.00	21.38' Rt	548.88	541.02	W18X106	509.25	522.72	26'-2''	2'-6''	18
5-01	11+75.50	21.38' Rt	549.06	543.80	W18X106	508.89	532.70	16'-5''	2'-6''	12
5-02	11+81.99	21.38' Rt	549.24	543.80	W18X106	508.54	532.70	16'-7''	2'-6''	12
5-03	11+88.49	21.38' Rt	549.42	543.80	W18X106	508.18	532.70	16'-9''	2'-6''	14
5-04	11+94.99	21.38' Rt	549.60	543.80	W18X106	507.82	532.70	16'-11''	2'-6''	14
5-05	11+99.83	21.38' Rt	549.73	546.55	W18X106	507.56	535.45	14'-4''	2'-6''	8
5-06	12+04.72	21.38' Rt	549.87	546.55	W18X106	507.29	535.45	14'-6''	2'-6''	8
5-07	12+09.61	21.38' Rt	550.01	546.55	W18X106	507.02	535.45	14'-7''	2'-6''	8
5-08	12+14.49	21.38' Rt	550.14	546.55	W18X106	506.76	535.45	14'-9''	2'-6''	10
5-09	12+20.99	21.38' Rt	550.33	546.55	W18X106	506.40	535.45	14'-11''	2'-6''	10
5-10	12+27.49	21.38' Rt	550.51	548.55	W18X106	506.04	537.45	13'-1''	2'-6''	6
5-11	12+33.99	21.38' Rt	550.69	548.55	W18X106	505.93	537.45	13'-3''	2'-6''	6

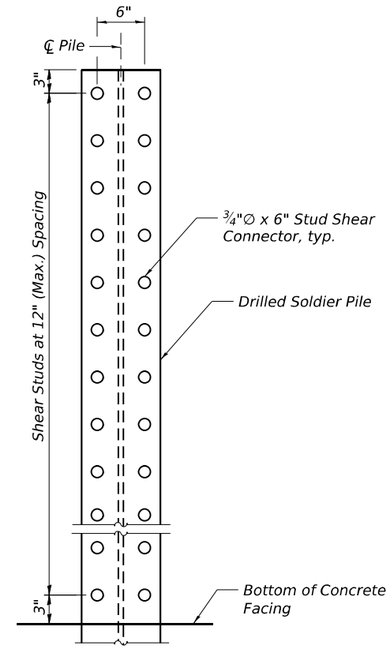

SHEAR STUD DETAIL

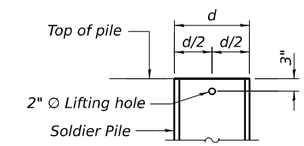

LIFTING HOLE DETAIL

BILL OF MATERIAL

Bar	No.	Size	Length	Shape	
h301(E)	158	#5	33'-9"		***
h302(E)	102	#5	29'-8"		***
h303(E)	10	#5	13'-9"		***
v301(E)	62	#5	4'-5"		
v302(E)	62	#5	5'-2"		
v303(E)	62	#5	6'-0"		
v304(E)	62	#5	6'-10"		
v305(E)	62	#5	7'-11"		
v306(E)	62	#5	8'11"		
v307(E)	62	#5	10'-0"		
v308(E)	62	#5	10'-10"		
v309(E)	62	#5	11'-6"		
v310(E)	62	#5	11'-8"		
v311(E)	62	#5	10'-10"		
v312(E)	62	#5	9'-1"		
v313(E)	62	#5	7'-0"		
v314(E)	62	#5	5'-0"		
v315(E)	30	#5	3'-4"		
Structure Excavation			Cu. Yd.	259.0	
Concrete Structures			Cu. Yd.	130.4	
Stud Shear Connectors			Each	878	
Reinforcement Bars, Epoxy Coated			Pound	16,420	
Furnishing Soldier Piles (W Section)			Foot	1,580	
Drilling and Setting Soldier Piles (In Soil)			Cu. Ft.	8,853	
Drilling and Setting Soldier Piles (In Rock)			Cu. Ft.	679	
Untreated Timber Lagging			Sq. Ft.	2,653	
Concrete Sealer			Sq. Ft.	3,419	
Geocomposite Wall Drain			Sq. Yd.	226	
Pipe Underdrain for Structures 4"			Foot	453	

*** Bars are to be furnished straight and are to be sprung and tied at the required radius in the field.

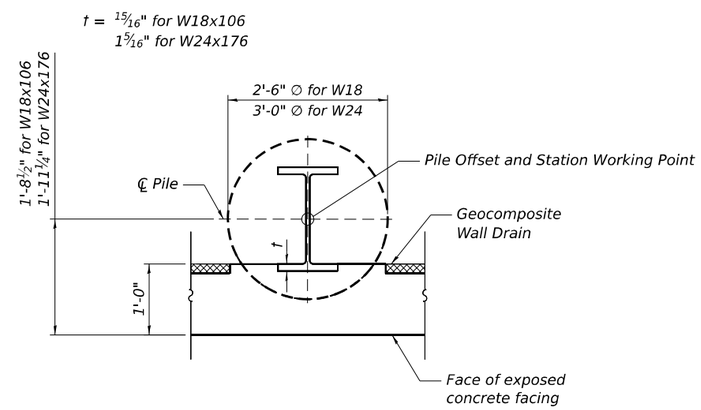

SOLDIER PILE WORKING POINT

NOTE:

Offsets and Pile Stations are measured to the center of pile and along ℄ Ramp AA.

MODEL: Default
FILE NAME: 099W121-62F94-SH-09-Pile-Details.dgn

SEB
1111 BURLINGTON AVE., SUITE 111 - LISLE, IL 60532
(630) 641-9900

USER NAME = Jsandoval	DESIGNED - JSS	REVISED -	
	CHECKED - RRD	REVISED -	
PLOT SCALE = 0:0.1667 ':' / in.	DRAWN - TCK	REVISED -	
PLOT DATE = 10/28/2025	CHECKED - RRD	REVISED -	

STATE OF ILLINOIS
DEPARTMENT OF TRANSPORTATION

PILE LAYOUT AND DETAILS
STRUCTURE NO. 099-W121

SHEET SH-09 OF SH-22 SHEETS

F.A.I. RTE.	SECTION	COUNTY	TOTAL SHEETS	SHEET NO.
80	2017-057F	WILL	1342	940
		CONTRACT NO. 62F94		
	ILLINOIS	FED. AID PROJECT		

10/28/2025 9:55:56 AM

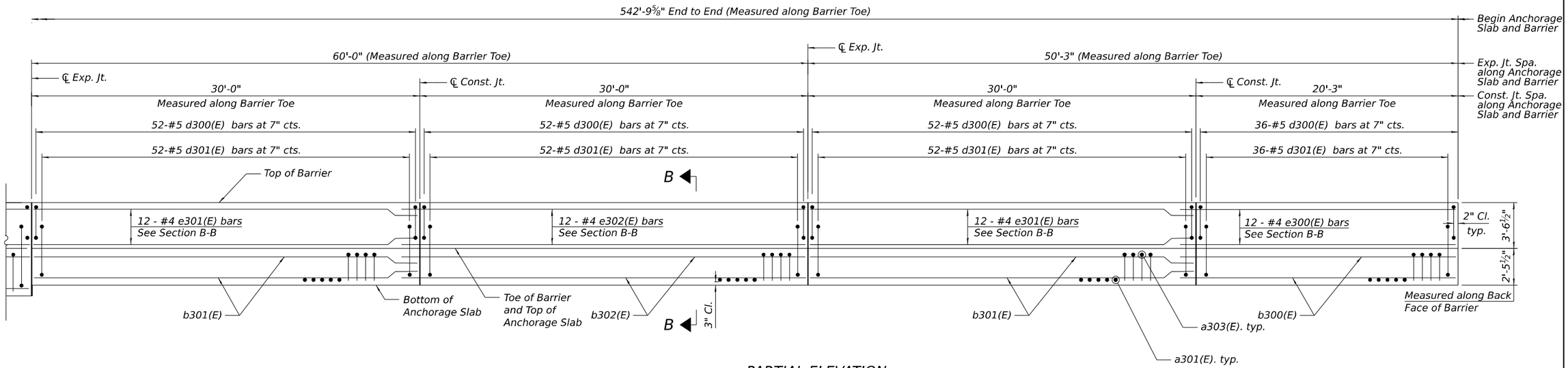

PARTIAL ELEVATION

(Looking at Back Face of Barrier)

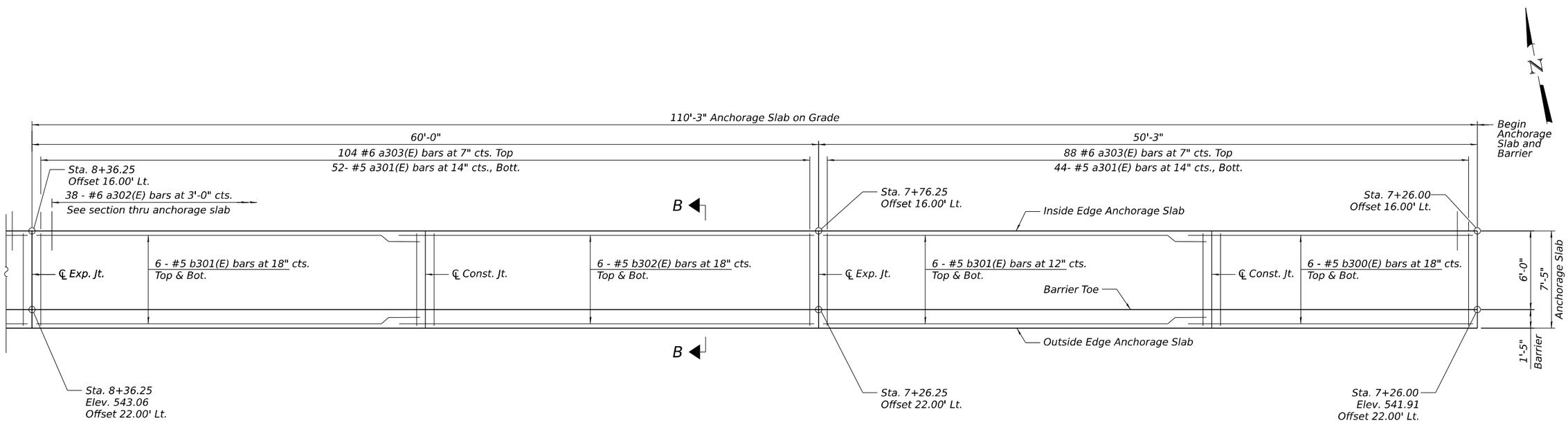

PARTIAL PLAN

MIN. BAR LAP

#4 bar = 2'-8"
#5 bar = 3'-6"

NOTES:

1. For Sections A-A and B-B, see Sheet SH-16.
3. See Sheet SH-16 for Bill of Material.
4. Stations and offsets are measured from the ℄ of Ramp AA.

MODEL: Default
FILE NAME: 099W121-62F94-SH-10-A-Plan-Elev1.dgn

SEB
1111 BURLINGTON AVE., SUITE 111 - LISLE, IL 60532
(630) 641-9900

USER NAME = jsandoval	DESIGNED - JSS	REVISED -	
	CHECKED - RRD	REVISED -	
PLOT SCALE = 0:0.1667 ':' / in.	DRAWN - TCK	REVISED -	
PLOT DATE = 10/28/2025	CHECKED - RRD	REVISED -	

STATE OF ILLINOIS
DEPARTMENT OF TRANSPORTATION

ANCHORAGE SLAB PLAN AND ELEVATION SLAB ON GRADE
STRUCTURE NO. 099-W121

SHEET SH-10 OF SH-22 SHEETS

F.A.I. RTE.	SECTION	COUNTY	TOTAL SHEETS	SHEET NO.
80	2017-057F	WILL	1342	941
		CONTRACT NO. 62F94		
	ILLINOIS	FED. AID PROJECT		

10/28/2025 9:56:15 AM

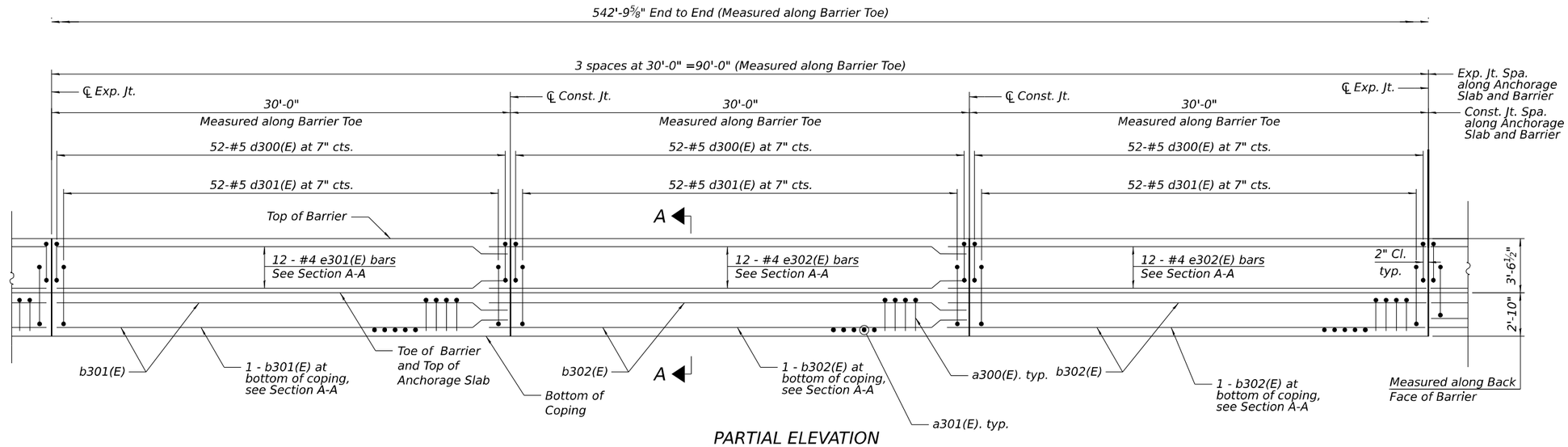

PARTIAL ELEVATION

(Looking at Back Face of Wall)

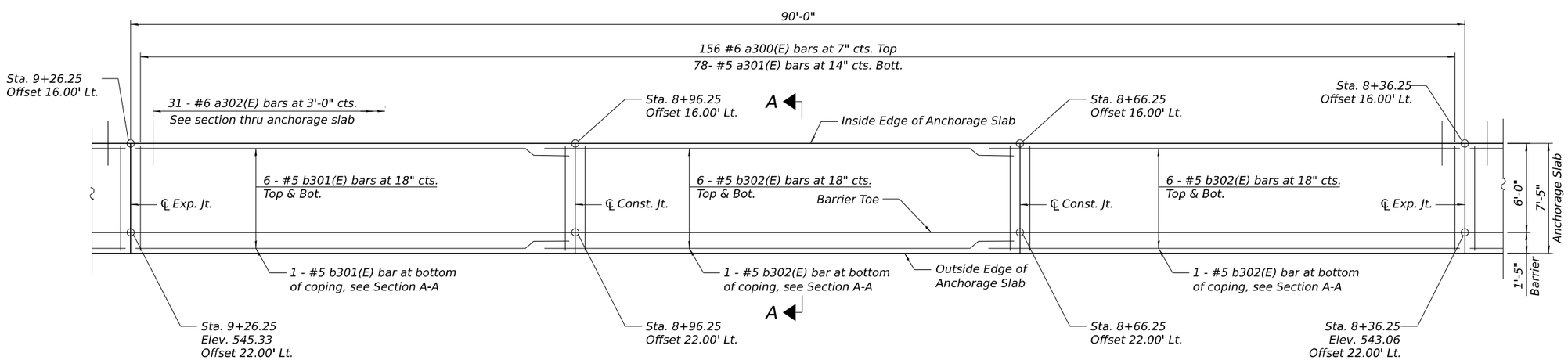

PARTIAL PLAN

N

NOTE

1. For notes and Minimum bar lap, see Sheet SH-10.
2. For reinforcement cover requirements, see Sheet SH-16.

MODEL: Default
FILE NAME: 099W121-62F94-SH-11-A-Plan-Elev2.dgn

SEA
1111 BURLINGTON AVE., SUITE 111 - LISLE, IL 60532
(630) 641-9800

USER NAME = Jsandoval	DESIGNED - JSS	REVISED -	
	CHECKED - RRD	REVISED -	
PLOT SCALE = 0:0.1667 ':' / in.	DRAWN - TCK	REVISED -	
PLOT DATE = 10/28/2025	CHECKED - RRD	REVISED -	

STATE OF ILLINOIS
DEPARTMENT OF TRANSPORTATION

ANCHORAGE SLAB PLAN AND ELEVATION UNIT 1
STRUCTURE NO. 099-W121

SHEET SH-11 OF SH-22 SHEETS

F.A.I. RTE.	SECTION	COUNTY	TOTAL SHEETS	SHEET NO.
80	2017-057F	WILL	1342	942
		CONTRACT NO. 62F94		
		ILLINOIS	FED. AID PROJECT	

10/28/2025 9:56:31 AM

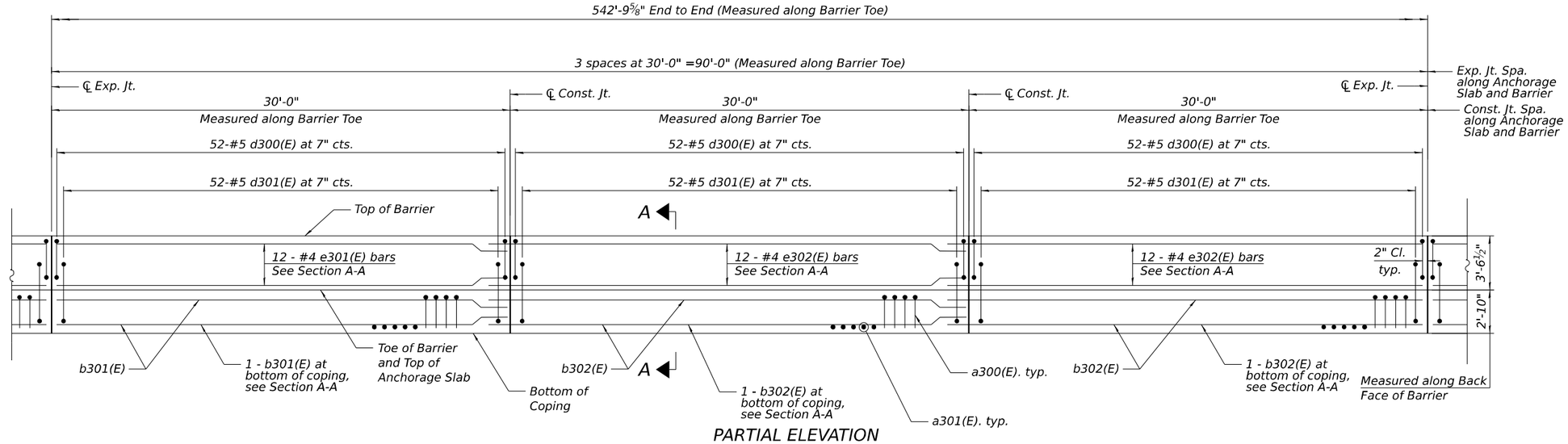

PARTIAL ELEVATION
(Looking at Back Face of Wall)

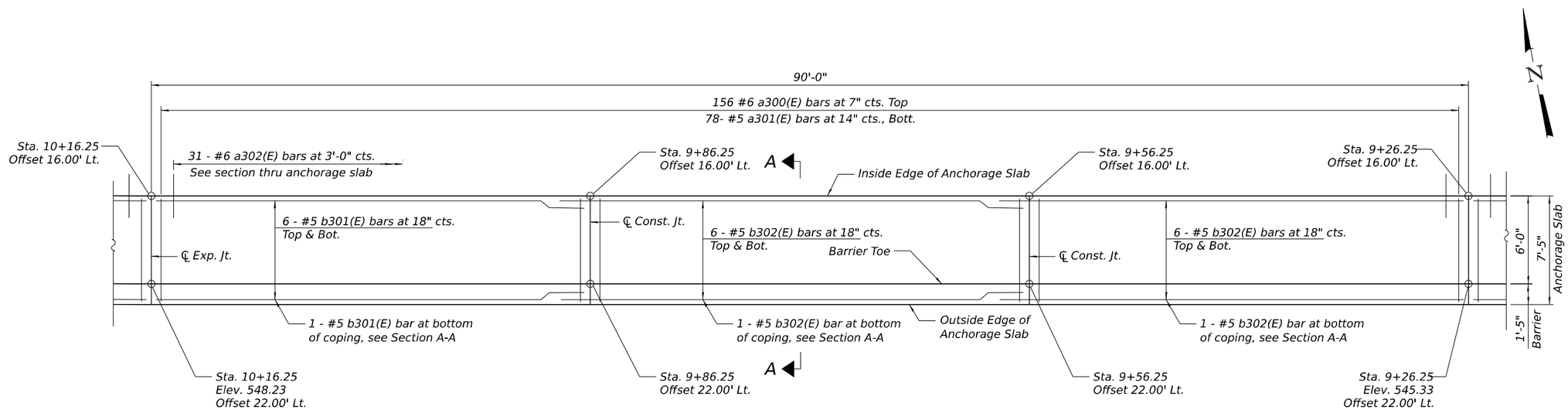

PARTIAL PLAN

NOTE

1. For notes and minimum bar lap, see Sheet SH-10.
2. For reinforcement cover requirements, see Sheet SH-16.

MODEL: Default
FILE NAME: 099W121-62F94-SH-12-A-Plan-Elev3.dgn

SEB
1111 BURLINGTON AVE., SUITE 111 - LISLE, IL 60532
(630) 641-9800

USER NAME = jsandoval	DESIGNED - JSS	REVISED -	
	CHECKED - RRD	REVISED -	
PLOT SCALE = 0:0.1667 ':' / in.	DRAWN - TCK	REVISED -	
PLOT DATE = 10/28/2025	CHECKED - RRD	REVISED -	

STATE OF ILLINOIS
DEPARTMENT OF TRANSPORTATION

ANCHORAGE SLAB PLAN AND ELEVATION UNIT 2
STRUCTURE NO. 099-W121

SHEET SH-12 OF SH-22 SHEETS

F.A.I. RTE.	SECTION	COUNTY	TOTAL SHEETS	SHEET NO.
80	2017-057F	WILL	1342	943
		CONTRACT NO. 62F94		
		ILLINOIS	FED. AID PROJECT	

10/28/2025 9:56:43 AM

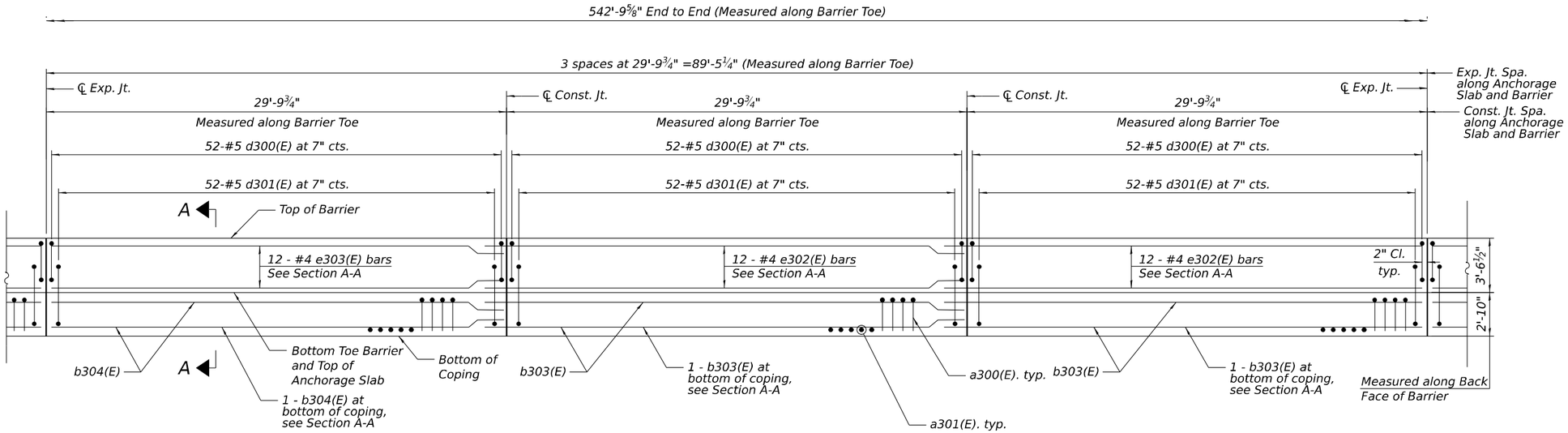

PARTIAL ELEVATION

(Looking at Back Face of Wall)

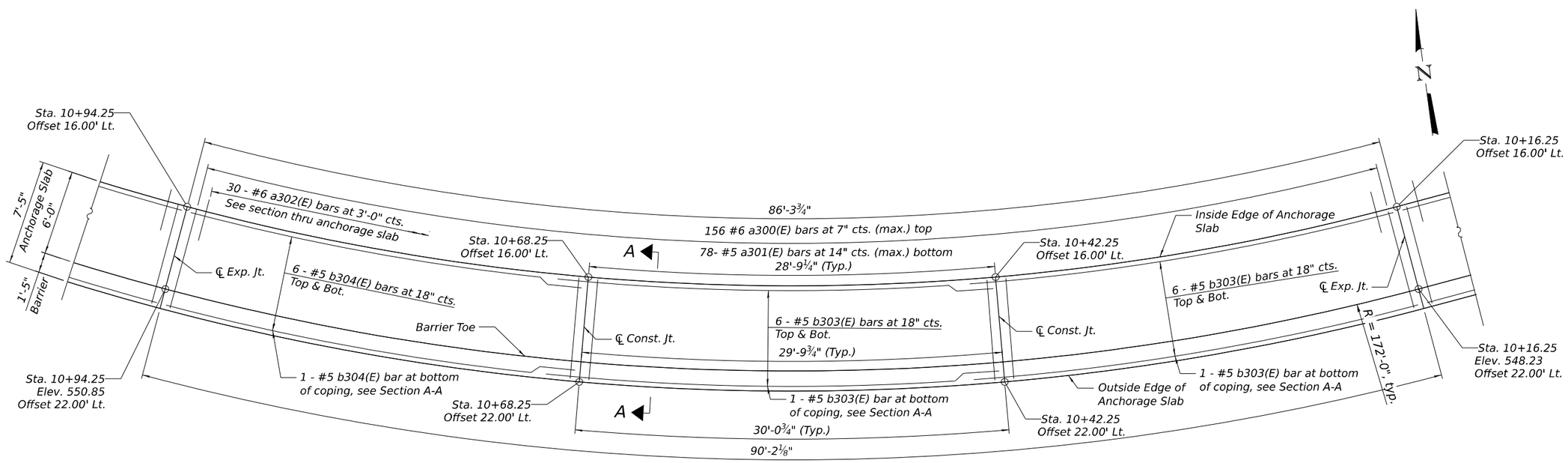

PARTIAL PLAN

NOTE

1. For notes and minimum bar lap, see Sheet SH-10.
2. For reinforcement cover requirements, see Sheet SH-16.

MODEL: Default
FILE NAME: 099W121-62F94-SH-13-A-Plan-Elev4.dgn

10/28/2025 9:56:55 AM

SEB
1111 BURLINGTON AVE., SUITE 111 - LISLE, IL 60532
(630) 641-9800

USER NAME = jsandoval	DESIGNED - JSS	REVISED -	
	CHECKED - RRD	REVISED -	
PLOT SCALE = 0:0.1667 ':' / in.	DRAWN - TCK	REVISED -	
PLOT DATE = 10/28/2025	CHECKED - RRD	REVISED -	

STATE OF ILLINOIS
DEPARTMENT OF TRANSPORTATION

ANCHORAGE SLAB PLAN AND ELEVATION UNIT 3
STRUCTURE NO. 099-W121

SHEET SH-13 OF SH-22 SHEETS

F.A.I. RTE.	SECTION	COUNTY	TOTAL SHEETS	SHEET NO.
80	2017-057F	WILL	1342	944
		CONTRACT NO. 62F94		
		ILLINOIS	FED. AID PROJECT	

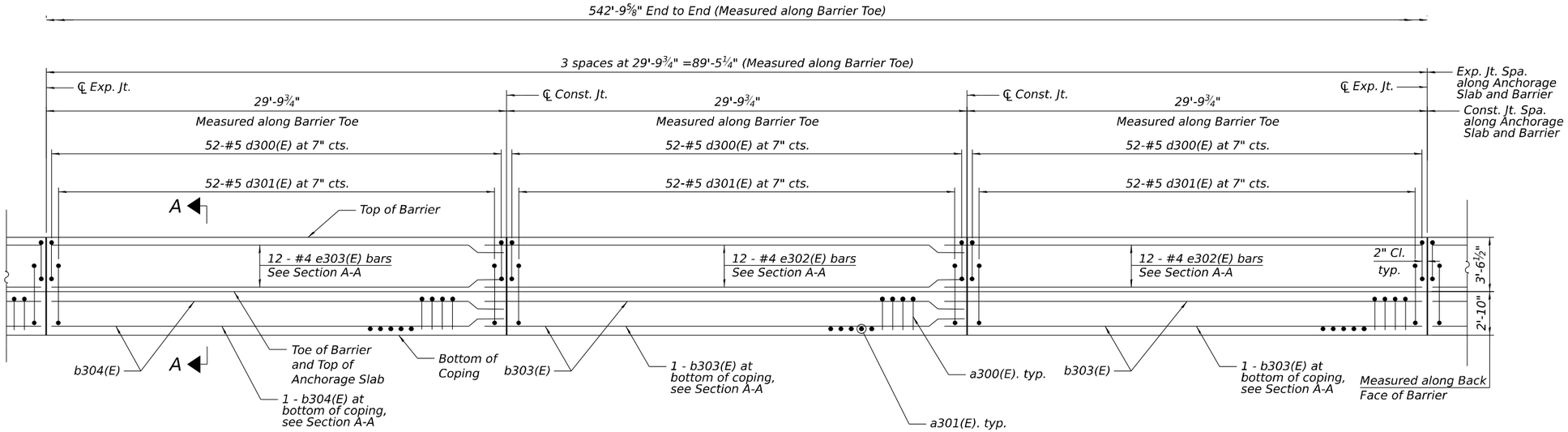

PARTIAL ELEVATION

(Looking at Back Face of Wall)

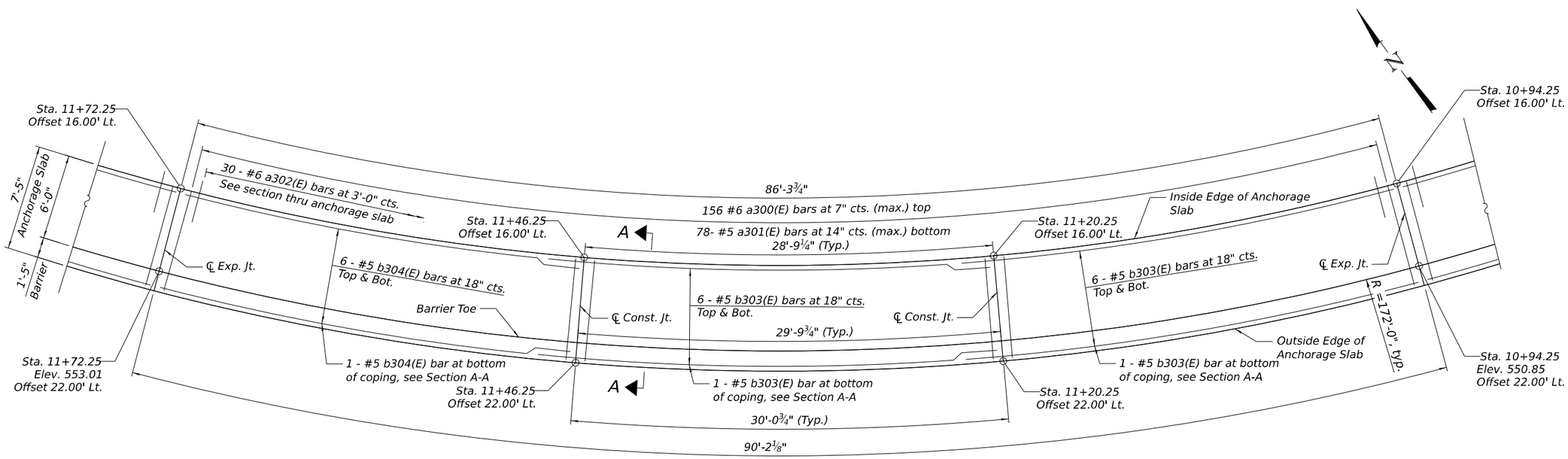

PARTIAL PLAN

NOTE

1. For notes and minimum bar lap, see Sheet SH-10.
2. For reinforcement cover requirements, see Sheet SH-16.

MODEL: Default
FILE NAME: 099W121-62F94-SH-14-A-Plan-Elev5.dgn

SEB
1111 BURLINGTON AVE., SUITE 111 - LISLE, IL 60532
(630) 641-9800

USER NAME = jsandoval	DESIGNED - JSS	REVISED -	
	CHECKED - RRD	REVISED -	
PLOT SCALE = 0:0.1667 ':' / in.	DRAWN - TCK	REVISED -	
PLOT DATE = 10/28/2025	CHECKED - RRD	REVISED -	

STATE OF ILLINOIS
DEPARTMENT OF TRANSPORTATION

ANCHORAGE SLAB PLAN AND ELEVATION UNIT 4
STRUCTURE NO. 099-W121

SHEET SH-14 OF SH-22 SHEETS

F.A.I. RTE.	SECTION	COUNTY	TOTAL SHEETS	SHEET NO.
80	2017-057F	WILL	1342	945
		CONTRACT NO. 62F94		
		ILLINOIS	FED. AID PROJECT	

10/28/2025 9:57:08 AM

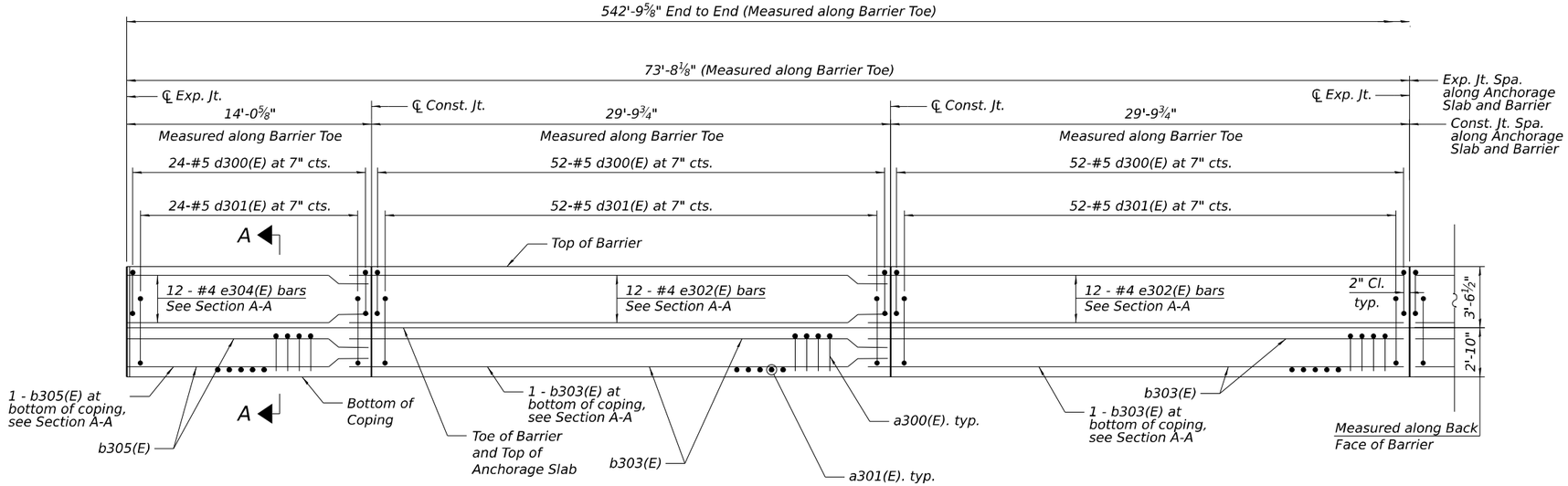

PARTIAL ELEVATION

(Looking at Back Face of Wall)

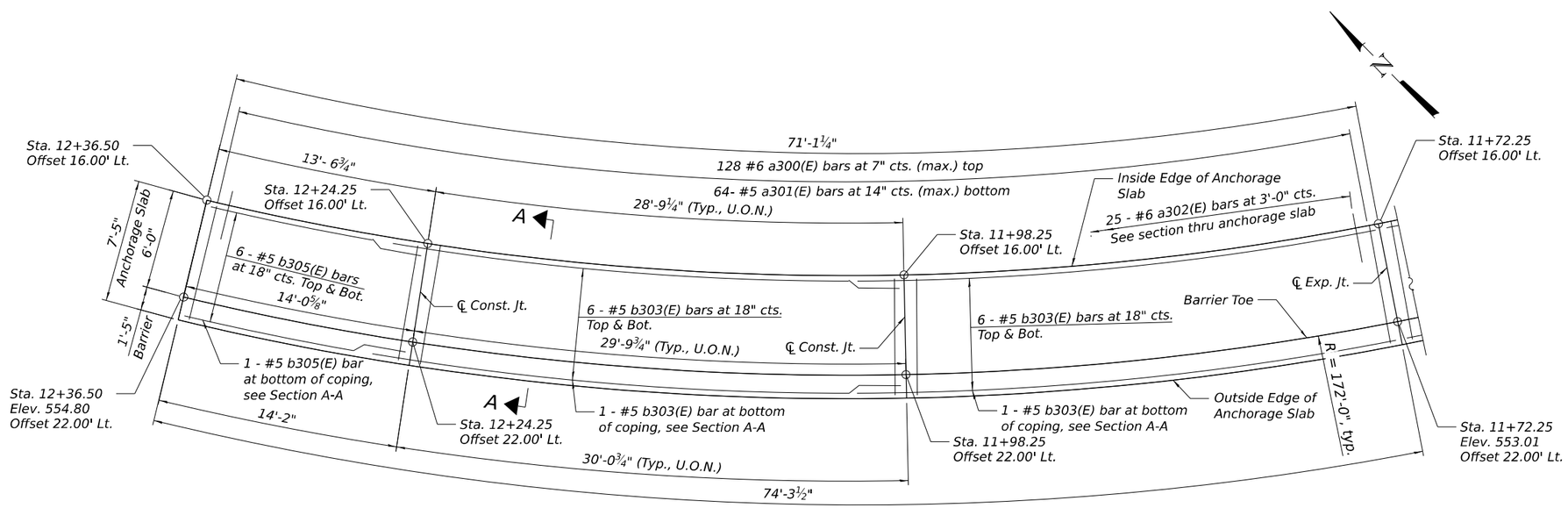

PARTIAL PLAN

NOTE

1. For notes and Minimum bar lap, see Sheet SH-10.
2. For reinforcement cover requirements, see Sheet SH-16.

MODEL: Default
FILE NAME: 099W121-62F94-SH-15-A-Plan-Elev6.dgn

SEB
1111 BURLINGTON AVE., SUITE 111 - LISLE, IL 60532
(630) 641-9800

USER NAME = jsandoval	DESIGNED - JSS	REVISED -	
	CHECKED - RRD	REVISED -	
PLOT SCALE = 0:0.1667 ':' / in.	DRAWN - TCK	REVISED -	
PLOT DATE = 10/28/2025	CHECKED - RRD	REVISED -	

STATE OF ILLINOIS
DEPARTMENT OF TRANSPORTATION

ANCHORAGE SLAB PLAN AND ELEVATION UNIT 5
STRUCTURE NO. 099-W121

SHEET SH-15 OF SH-22 SHEETS

F.A.I. RTE.	SECTION	COUNTY	TOTAL SHEETS	SHEET NO.
80	2017-057F	WILL	1342	946
		CONTRACT NO. 62F94		
	ILLINOIS	FED. AID PROJECT		

10/28/2025 9:57:21 AM

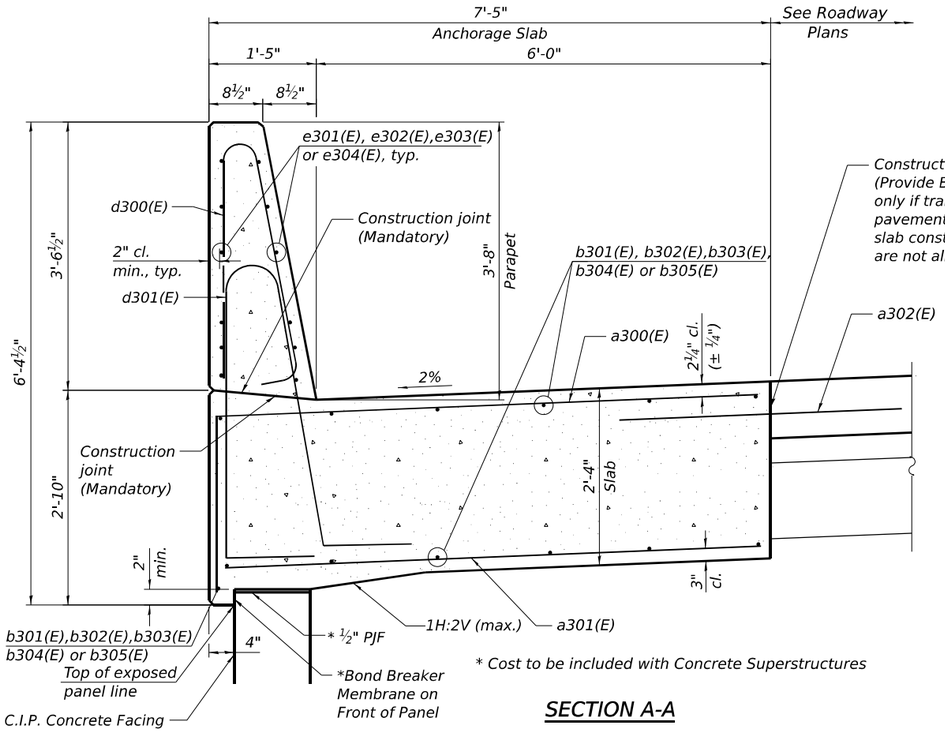

* Cost to be included with Concrete Superstructures

SECTION A-A

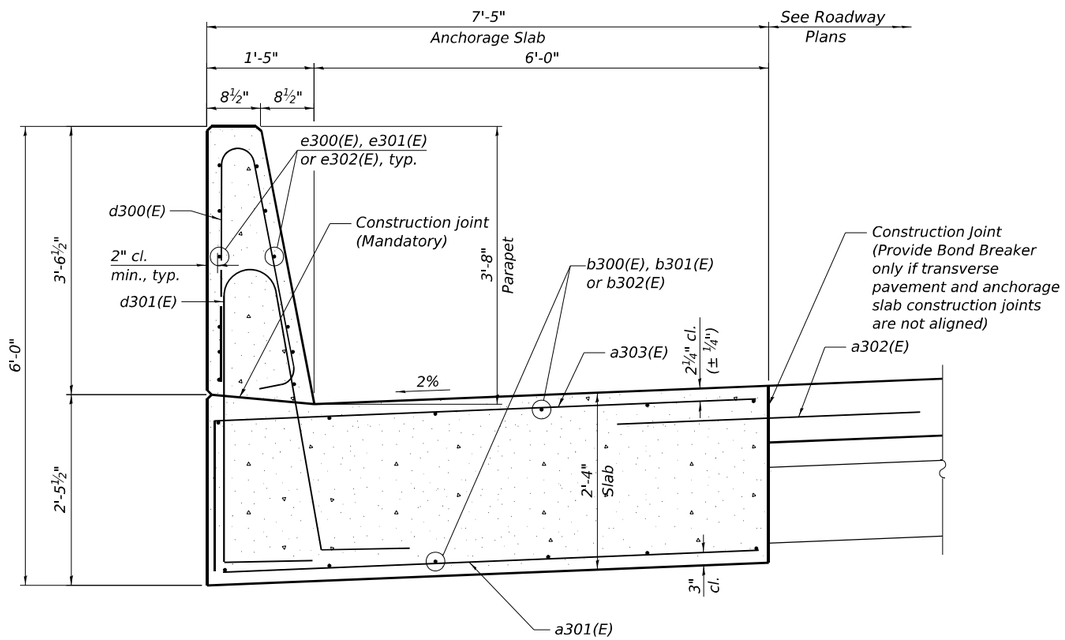

SECTION B-B

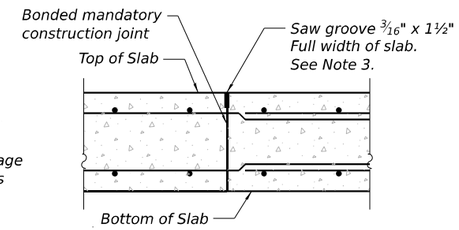

TRANSVERSE CONSTRUCTION JT. IN SLAB - SECTION

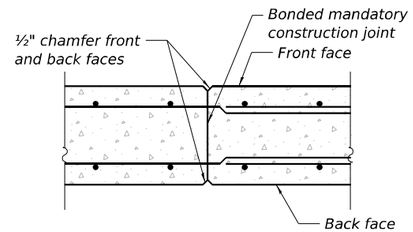

TRANSVERSE CONSTRUCTION JT. IN BARRIER - PLAN

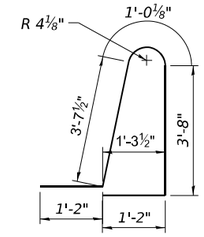

BAR d301(E)

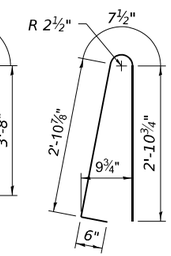

BAR d300(E)

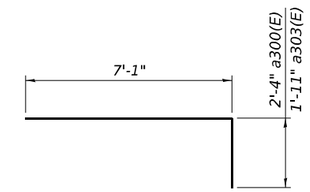

BARS a300(E) and a303(E)

BILL OF MATERIAL

Bar	No.	Size	Length	Shape	
a300(E)	752	#6	9'-5"		
a301(E)	472	#5	7'-1"		
a302(E)	185	#6	4'-0"		
a303(E)	192	#6	9'-0"		
b300(E)	12	#5	23'-11"		
b301(E)	50	#5	29'-8"		
b302(E)	64	#5	33'-8"		
b303(E)	78	#5	34'-0"		***
b304(E)	26	#5	28'-5"		***
b305(E)	13	#5	13'-2"		***
d300(E)	944	#5	6'-11"		
d301(E)	944	#5	10'-8"		
e300(E)	12	#4	23'-1"		***
e301(E)	48	#4	29'-8"		***
e302(E)	132	#4	32'-10"		***
e303(E)	24	#4	29'-5"		***
e304(E)	12	#4	13'-5"		***
Concrete Superstructure			Cu Yd	430.0	
Protective Coat			Sq Yd	630	
Concrete Sealer			Sq Ft	2,913	
Reinforcement Bars, Epoxy Coated			Pound	47,570	

*** Bars are to be provided straight and are to be sprung and tied at the required radius in the field.

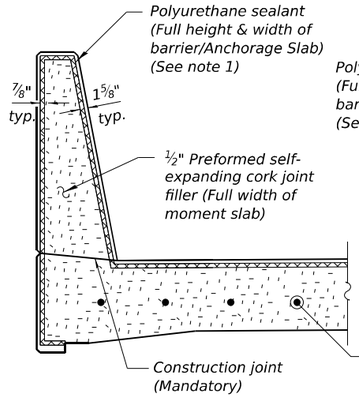

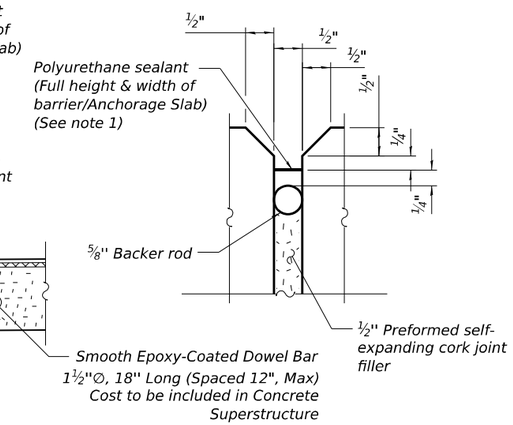

EXPANSION JOINT DETAILS

See Note 2

NOTES:

1. The Polyurethane Sealant shall be according to Article 1050.04 of the Standard Specifications and the color shall be gray.
2. Cost of expansion joints shall be included in Concrete Superstructure.
3. The saw grove shall use a hot poured joint sealer per Article 1050.02 of the standard Specification, cost included in Concrete Superstructure.
4. #6 a302(E) 4'-0" long dowel bars shall be placed at mid-depth of adjacent pavement at a maximum of 3'-0" plan spacing. If dowel bar aligns within 1'-6" of a pavement joint, the dowel bar shall be repositioned such that it is placed at a minimum of 1'-6" from either side of the pavement joint.

MODEL: Default
FILE NAME: 099W121-62F94-SH-16-A-Sec&Details.dgn

SEB
1111 BURLINGTON AVE., SUITE 111 - LISLE, IL 60532
(630) 641-9800

USER NAME = jsandoval	DESIGNED - JSS	REVISED -	
	CHECKED - RRD	REVISED -	
PLOT SCALE = 0:0.1667 ':' / in.	DRAWN - TCK	REVISED -	
PLOT DATE = 10/28/2025	CHECKED - RRD	REVISED -	

STATE OF ILLINOIS
DEPARTMENT OF TRANSPORTATION

ANCHORAGE SLAB DETAILS AND BILL OF MATERIAL
STRUCTURE NO. 099-W121

SHEET SH-16 OF SH-22 SHEETS

F.A.I. RTE.	SECTION	COUNTY	TOTAL SHEETS	SHEET NO.
80	2017-057F	WILL	1342	947
		CONTRACT NO. 62F94		
		ILLINOIS	FED. AID PROJECT	

10/28/2025 9:57:33 AM

Illinois Department of Transportation
Division of Highways
GSG Consultants, Inc.

SOIL BORING LOG

Date 6/13/22

ROUTE I-80 DESCRIPTION Retaining Wall No. 8 - Ramp AA LOGGED BY KA

SECTION I-80 over Des Plaines River LOCATION , SEC. 16, TWP. 35 N, RNG. 10 E,
Latitude , Longitude

COUNTY Will DRILLING RIG Diedrich D-50 HAMMER TYPE Auto
DRILLING METHOD HSA HAMMER EFF (%) 98

STRUCT. NO.
Station

BORING NO. RWB-66
Station 7+92.3564
Offset 25.25ft LT
Ground Surface Elev. 546.72 ft

Surface Water Elev. N/A ft
Stream Bed Elev. N/A ft

Groundwater Elev.:
First Encounter Dry ft
Upon Completion N/A ft
After ___ Hrs. N/A ft

Description	Elev.	DEPTH (ft)	BLOWS (/6")	UCS Qu (tsf)	MOIST (%)
2 inches of Topsoil	546.55				
Brown and Gray, Moist FILL: SILTY CLAY, trace gravel			2		
			2 4	1.5 P	18
			1		
			2 3	3.0 P	22
	541.72	-5			
Stiff to Hard Brown, Moist SILTY CLAY, trace gravel (CL)			4		
			6 9	1.5 P	18
			3		
			7 9	4.5 P	19
		-10			
			4		
			6 9	3.5 P	17
	533.22				
Very Stiff Gray, Moist SILTY CLAY LOAM, trace gravel (ML/CL)			7		
			14 30	2.0 P	13
		-15			
			10		
Sand and gravel seam at 17.0 feet			14 22		13
			6		
			8 12	3.0 P	14
	526.72	-20			
Dense Brown and Gray, Moist GRAVEL, with sand (GPS) Cobbles at 21.0 feet			19		
			15 16		8
	523.22				
Medium Dense to Very Dense Light Brown, Moist SAND, with gravel (SPG)			6		
			9 9		13
		-25			
Cobbles at 26.0 feet			20		
			28 25		7
			5		
			10 16		7
		-30			
			50/6"		
Split Spoon Refusal at 32.0 feet	514.72				5
Light Gray LIMESTONE, slightly weathered, heavily fractured					
Run 1: 32' - 42' Recovery: 100% RQD: 56.2% (Fair)		-35			
		-40			

The Unconfined Compressive Strength (UCS) Failure Mode is indicated by (B-Bulge, S-Shear, P-Penetrometer)
The SPT (N value) is the sum of the last two blow values in each sampling zone (AASHTO T206)

BBS, form 137 (Rev. 8-99)

Illinois Department of Transportation
Division of Highways
GSG Consultants, Inc.

SOIL BORING LOG

Date 6/13/22

ROUTE I-80 DESCRIPTION Retaining Wall No. 8 - Ramp AA LOGGED BY KA

SECTION I-80 over Des Plaines River LOCATION , SEC. 16, TWP. 35 N, RNG. 10 E,
Latitude , Longitude

COUNTY Will DRILLING RIG Diedrich D-50 HAMMER TYPE Auto
DRILLING METHOD HSA HAMMER EFF (%) 98

STRUCT. NO.
Station

BORING NO. RWB-66
Station 7+92.3564
Offset 25.25ft LT
Ground Surface Elev. 546.72 ft

Surface Water Elev. N/A ft
Stream Bed Elev. N/A ft

Groundwater Elev.:
First Encounter Dry ft
Upon Completion N/A ft
After ___ Hrs. N/A ft

Description	Elev.	DEPTH (ft)	BLOWS (/6")	UCS Qu (tsf)	MOIST (%)
	504.72				
End of Boring					
		-45			
		-50			
		-55			
		-60			

The Unconfined Compressive Strength (UCS) Failure Mode is indicated by (B-Bulge, S-Shear, P-Penetrometer)
The SPT (N value) is the sum of the last two blow values in each sampling zone (AASHTO T206)

BBS, form 137 (Rev. 8-99)

MODEL: Default
FILE NAME: 099W121-62F94-SH-17-Boring Log 1.dgn

SEB
1111 BURLINGTON AVE, SUITE 111 - LISLE, IL 60532
(630) 641-9900

USER NAME = jsandoval	DESIGNED - JSS	REVISED -	
	CHECKED - RRD	REVISED -	
PLOT SCALE = 0.167 ' / in.	DRAWN - TCK	REVISED -	
PLOT DATE = 10/28/2025	CHECKED - RRD	REVISED -	

STATE OF ILLINOIS
DEPARTMENT OF TRANSPORTATION

BORING LOGS (1 OF 6)
STRUCTURE NO. 099-W121
SHEET SH-17 OF SH-22 SHEETS

F.A.I. RTE.	SECTION	COUNTY	TOTAL SHEETS	SHEET NO.
80	2017-057F	WILL	1342	948
		CONTRACT NO. 62F94		
		ILLINOIS	FED. AID PROJECT	

10/28/2025 9:57:43 AM

Illinois Department of Transportation
Division of Highways
GSG Consultants, Inc.

SOIL BORING LOG

Date 6/14/22

ROUTE I-80 DESCRIPTION Retaining Wall No. 8 - Ramp AA LOGGED BY KA

SECTION I-80 over Des Plaines River LOCATION , SEC. 16, TWP. 35 N, RNG. 10 E, Latitude , Longitude

COUNTY Will DRILLING RIG Diedrich D-50 HAMMER TYPE Auto
DRILLING METHOD HSA HAMMER EFF (%) 98

STRUCT. NO.
Station

BORING NO. RWB-67
Station 8+72.7860
Offset 15.70ft LT
Ground Surface Elev. 546.06 ft

Surface Water Elev. N/A ft
Stream Bed Elev. N/A ft

Groundwater Elev.:
First Encounter Dry ft
Upon Completion N/A ft
After ___ Hrs. N/A ft

Description	Elev.	DEPTH (ft)	BLOWS (/6")	UCS Qu (tsf)	MOIST (%)
Brown and Gray, Moist FILL: SILTY CLAY, trace gravel			3		
			3 7	2.0 P	20
	543.56				
Very Stiff Brown, Moist SILTY CLAY, trace gravel (CL/ML)			2		
			2 5	2.0 P	20
	541.06	-5			
Very Stiff to Hard Brown and Gray, Moist SILTY CLAY LOAM, trace sand and gravel (ML/CL)			4		
			7 8	3.0 P	12
			3		
			7 8	4.5 P	21
		-10			
	535.06				
Stiff to Very Stiff Gray, Moist SILTY CLAY LOAM, with gravel, trace sand (ML/CL) Sand seam at 12 feet			6		
			12 18	1.5 P	13
			9		
			12 12		11
		-15			
			4		
			18 22	3.0 P	17
	527.56				
Medium Dense to Dense Light Brown, Moist SAND, with gravel (SPG)			27		
			15 20		7
		-20			

Description	Elev.	DEPTH (ft)	BLOWS (/6")	UCS Qu (tsf)	MOIST (%)
Medium Dense to Dense Light Brown, Moist SAND, with gravel (SPG) *(continued)*			33		
Cobbles at 21 feet			13 13		5
Cobbles at 23.5 feet			35		
		-25	22 9		6
			13		
			12 23		8
Cobbles at 28.5 feet			7		
			11 8		9
		-30			
			9		
			10 11		7
	512.56				
Auger refusal at 33.5 feet End of Boring			50/2"		NR
		-35			
		-40			

The Unconfined Compressive Strength (UCS) Failure Mode is indicated by (B-Bulge, S-Shear, P-Penetrometer)
The SPT (N value) is the sum of the last two blow values in each sampling zone (AASHTO T206)

BBS, form 137 (Rev. 8-99)

Illinois Department of Transportation
Division of Highways
GSG Consultants, Inc.

SOIL BORING LOG

Date 6/14/22

ROUTE I-80 DESCRIPTION Retaining Wall No. 8 - Ramp AA LOGGED BY KA

SECTION I-80 over Des Plaines River LOCATION , SEC. 16, TWP. 35 N, RNG. 10 E, Latitude , Longitude

COUNTY Will DRILLING RIG Diedrich D-50 HAMMER TYPE Auto
DRILLING METHOD HSA HAMMER EFF (%) 98

STRUCT. NO.
Station

BORING NO. RWB-68
Station 9+47.5456
Offset 11.93ft LT
Ground Surface Elev. 548.11 ft

Surface Water Elev. N/A ft
Stream Bed Elev. N/A ft

Groundwater Elev.:
First Encounter Dry ft
Upon Completion N/A ft
After ___ Hrs. N/A ft

Description	Elev.	DEPTH (ft)	BLOWS (/6")	UCS Qu (tsf)	MOIST (%)
Brown and Gray, Moist FILL: SILTY CLAY, trace gravel			2		
			3 4	3.0 P	18
	545.61				
Very Stiff Brown and Gray, Moist SILTY CLAY, trace gravel (CL)			3		
			4 6	3.5 P	19
		-5			
			3		
			8 8	2.5 P	19
	539.61				
Very Stiff to Hard Gray, Moist SILTY CLAY LOAM, trace sand and gravel (ML/CL) Sand seam at 9 feet			4		
			8 10		13
		-10			
			3		
			8 11	4.5 P	16
			6		
			10 15	2.0 P	19
		-15			
			7		
	531.61				
Medium Dense Light Brown and Gray, Moist SAND, with gravel and limestone fragments (SPG)			13 13		10
			13		
			11 14		9
		-20			

Description	Elev.	DEPTH (ft)	BLOWS (/6")	UCS Qu (tsf)	MOIST (%)
	527.11				
Stiff Brown and Gray, Very Moist SILTY CLAY LOAM, trace sand and gravel (CL/ML)			6		
			6 10	1.3 P	25
	524.61				
Medium Dense Brown, Very Moist SILT, trace gravel (ML)			4		
			6 8		29
		-25			
	522.11				
Medium Dense to Dense Light Brown, Moist SAND, with gravel, trace cobbles (SPG)			9		
			9 9		11
			10		
			14 9		10
		-30			
			6		
			25 9		10
			9		
			7 6		9
		-35			
Auger refusal at 36.5 feet	511.61				
Light Gray LIMESTONE, slightly weathered, slightly fractured Run 1: 36.5' - 46.5' Recovery: 100% RQD: 51.2% (Fair)					
		-40			

The Unconfined Compressive Strength (UCS) Failure Mode is indicated by (B-Bulge, S-Shear, P-Penetrometer)
The SPT (N value) is the sum of the last two blow values in each sampling zone (AASHTO T206)

BBS, form 137 (Rev. 8-99)

Illinois Department of Transportation
Division of Highways
GSG Consultants, Inc.

SOIL BORING LOG

Date 6/14/22

ROUTE I-80 DESCRIPTION Retaining Wall No. 8 - Ramp AA LOGGED BY KA

SECTION I-80 over Des Plaines River LOCATION , SEC. 16, TWP. 35 N, RNG. 10 E,
Latitude , Longitude

COUNTY Will DRILLING RIG Diedrich D-50 HAMMER TYPE Auto
DRILLING METHOD HSA HAMMER EFF (%) 98

STRUCT. NO.
Station

BORING NO. RWB-68
Station 9+47.5456
Offset 11.93ft LT
Ground Surface Elev. 548.11 ft

Surface Water Elev. N/A ft
Stream Bed Elev. N/A ft

Groundwater Elev.:
First Encounter Dry ft
Upon Completion N/A ft
After ___ Hrs. N/A ft

Description	Elev.	DEPTH (ft)	BLOWS (/6")	UCS Qu (tsf)	MOIST (%)
Light Gray LIMESTONE, slightly weathered, slightly fractured Run 1: 36.5' - 46.5' Recovery: 100% RQD: 51.2% (Fair) *(continued)*		-45			
End of Boring	501.61	-50 -55 -60			

The Unconfined Compressive Strength (UCS) Failure Mode is indicated by (B-Bulge, S-Shear, P-Penetrometer)
The SPT (N value) is the sum of the last two blow values in each sampling zone (AASHTO T206)

BBS, form 137 (Rev. 8-99)

Illinois Department of Transportation
Division of Highways
GSG Consultants, Inc.

SOIL BORING LOG

Date 6/17/22

ROUTE I-80 DESCRIPTION Retaining Wall No. 8 - Ramp AA LOGGED BY DD

SECTION I-80 over Des Plaines River LOCATION , SEC. 16, TWP. 35 N, RNG. 10 E,
Latitude , Longitude

COUNTY Will DRILLING RIG CME-75 HAMMER TYPE Auto
DRILLING METHOD HSA HAMMER EFF (%) 91

STRUCT. NO.
Station

BORING NO. RWB-69
Station 10+21.8430
Offset 18.45ft LT
Ground Surface Elev. 551.38 ft

Surface Water Elev. N/A ft
Stream Bed Elev. N/A ft

Groundwater Elev.:
First Encounter Dry ft
Upon Completion N/A ft
After ___ Hrs. N/A ft

Description	Elev.	DEPTH (ft)	BLOWS (/6")	UCS Qu (tsf)	MOIST (%)
Brown and Gray, Moist FILL: SILTY CLAY, trace gravel			2		
			2 2	1.0 P	11
Very Stiff to Hard Brown, Moist SILTY CLAY, trace gravel (CL/ML)	548.88		2		
		-5	2 4	2.5 P	18
			5		
			8 9	4.5 P	18
			3		
		-10	6 10	4.5 P	18
			4		
			6 10	3.5 P	21
			6		
		-15	8 8	4.5 P	17
			3		
			8 20	4.5 P	18
Very Dense Light Brown, Moist SAND, with gravel (SPG)	532.88	-20	42 50/4"		12
Very Stiff Dark Brown, Moist SILTY CLAY, trace sand and gravel (CL/ML)	530.38		4		
			17 29	3.5 P	19
Very Stiff Dark Brown, Moist SILTY CLAY LOAM (CL/ML)	527.88		4		
		-25	10 9	2.5 P	12
			4		
			5 6	2.5 P	11
Medium Dense to Dense Light Brown, Moist SAND, with gravel (SPG)	522.88		11		
		-30	16 14		7
			11		
			12 25		7
Cobbles at 33.5 feet			8		
		-35	10 14		9
			8		
			10 11		8
Auger refusal at 38.0 feet End of Boring	513.38	-40			

The Unconfined Compressive Strength (UCS) Failure Mode is indicated by (B-Bulge, S-Shear, P-Penetrometer)
The SPT (N value) is the sum of the last two blow values in each sampling zone (AASHTO T206)

BBS, form 137 (Rev. 8-99)

Illinois Department of Transportation
Division of Highways
GSG Consultants, Inc.

SOIL BORING LOG

Date 6/15/22

ROUTE I-80 DESCRIPTION Retaining Wall No. 8 - Ramp AA LOGGED BY KA

SECTION I-80 over Des Plaines River LOCATION , SEC. 16, TWP. 35 N, RNG. 10 E,
Latitude , Longitude

COUNTY Will DRILLING RIG Diedrich D-50 HAMMER TYPE Auto
DRILLING METHOD HSA HAMMER EFF (%) 98

STRUCT. NO.
Station

BORING NO. RWB-70
Station 10+88.6135
Offset 32.89ft LT
Ground Surface Elev. 551.16 ft

Surface Water Elev. N/A ft
Stream Bed Elev. N/A ft

Groundwater Elev.:
First Encounter Dry ft
Upon Completion N/A ft
After ___ Hrs. N/A ft

Description	Elev.	DEPTH (ft)	BLOWS (/6")	UCS Qu (tsf)	MOIST (%)
13 inches of Asphalt	550.08				
Brown and Gray, Moist FILL: SILTY CLAY, trace gravel	549.16		2		
Very Stiff Brown, Moist SILTY CLAY, trace gravel (CL/ML)			3 5	2.9 B	18
			2		
		-5	3 5	2.5 B	21
			3		
			4 4	3.5 P	18
			3		
		-10	4 5	2.5 B	20
	540.16				
Very Stiff Gray, Moist SILTY CLAY, trace gravel (CL/ML)			4		
			6 8	3.0 P	16
	537.66				
Very Stiff Gray, Moist SILTY CLAY LOAM, trace gravel (ML/CL)			4		
		-15	8 9	4.5 P	16
			5		
			8 10	1.3 P	15
	532.66				
			6		
		-20	7 10	7.3 B	20

Description	Elev.	DEPTH (ft)	BLOWS (/6")	UCS Qu (tsf)	MOIST (%)
Hard Brown, Moist SILTY CLAY, trace gravel (CL/ML) *(continued)*	530.16		6		
Medium Dense Dark Brown and Gray, Moist SAND, with gravel, trace clay (SPG)			6 9		11
	527.66		5		
Stiff Black and Brown, Moist SILTY CLAY LOAM, with gravel (CL/ML)		-25	3 4	1.5 P	19
	525.16		6		
Loose to Very Dense Light Brown, Moist SAND, with gravel (SPG)			17 17		9
			42		
		-30	14 15		6
			36		
			9 9		10
			4		
		-35	4 6		12
			8		
			14 50/1"		9
Split Spoon Refusal at 37.5 feet	513.66				
		-40			

The Unconfined Compressive Strength (UCS) Failure Mode is indicated by (B-Bulge, S-Shear, P-Penetrometer)
The SPT (N value) is the sum of the last two blow values in each sampling zone (AASHTO T206)

BBS, form 137 (Rev. 8-99)

Illinois Department of Transportation
Division of Highways
GSG Consultants, Inc.

SOIL BORING LOG

Date 6/15/22

ROUTE I-80 DESCRIPTION Retaining Wall No. 8 - Ramp AA LOGGED BY KA

SECTION I-80 over Des Plaines River LOCATION , SEC. 16, TWP. 35 N, RNG. 10 E,
Latitude , Longitude

COUNTY Will DRILLING RIG Diedrich D-50 HAMMER TYPE Auto
DRILLING METHOD HSA HAMMER EFF (%) 98

STRUCT. NO.
Station

BORING NO. RWB-70
Station 10+88.6135
Offset 32.89ft LT
Ground Surface Elev. 551.16 ft

Surface Water Elev. N/A ft
Stream Bed Elev. N/A ft

Groundwater Elev.:
First Encounter Dry ft
Upon Completion N/A ft
After ___ Hrs. N/A ft

Description	Elev.	DEPTH (ft)	BLOWS (/6")	UCS Qu (tsf)	MOIST (%)
Light Gray LIMESTONE, slightly weathered, slightly fractured Run 1: 37.5' - 47.5' Recovery: 100% RQD: 55.8% (Fair) *(continued)*		-45			
	503.66				
End of Boring		-50			
		-55			
		-60			

The Unconfined Compressive Strength (UCS) Failure Mode is indicated by (B-Bulge, S-Shear, P-Penetrometer)
The SPT (N value) is the sum of the last two blow values in each sampling zone (AASHTO T206)

BBS, form 137 (Rev. 8-99)

Illinois Department of Transportation
Division of Highways
GSG Consultants, Inc.

SOIL BORING LOG

Page 1 of 1

Date 6/16/22

ROUTE I-80 DESCRIPTION Retaining Wall No. 8 - Ramp AA LOGGED BY KA

SECTION I-80 over Des Plaines River LOCATION , SEC. 16, TWP. 35 N, RNG. 10 E,
Latitude , Longitude

COUNTY Will DRILLING RIG CME-75 HAMMER TYPE Auto
DRILLING METHOD HSA HAMMER EFF (%) 91

STRUCT. NO.
Station

BORING NO. RWB-71
Station 11+54.0529
Offset 25.79ft LT
Ground Surface Elev. 551.17 ft

Surface Water Elev. N/A ft
Stream Bed Elev. N/A ft

Groundwater Elev.:
First Encounter Dry ft
Upon Completion N/A ft
After ___ Hrs. N/A ft

Description	Elev.	DEPTH (ft)	BLOWS (/6")	UCS Qu (tsf)	MOIST (%)
13 inches of Asphalt	550.08				
Brown and Gray, Moist FILL: SILTY CLAY, trace gravel			5		
			4 5	5.4 B	18
	547.17		2		
Very Stiff to Hard Brown and Gray, Moist SILTY CLAY, trace gravel (CL/ML)		-5	4 3	3.3 B	19
			4		
			6 8	6.5 B	20
			4		
		-10	7 7	4.2 B	19
	540.17				
Stiff to Hard Gray, Moist SILTY CLAY, trace gravel (CL/ML)			3		
			3 7	1.3 B	18
			3		
		-15	6 8	2.7 B	14
			5		
			6 11	5.2 B	19
	532.67		8		
		-20	8 12	2.0 P	18

Description	Elev.	DEPTH (ft)	BLOWS (/6")	UCS Qu (tsf)	MOIST (%)
Very Stiff Gray, Moist SILTY CLAY LOAM, trace sand (ML/CL) *(continued)*	530.17		50/6"		
Very Dense Dark Brown, Moist SAND, with gravel, trace clay (SPG)	527.67				8
Medium Dense Brown, Moist SAND and GRAVEL, with clay (SPG) Cobbles at 23.5 to 27.5 feet			31		
		-25	11 6		9
			10		
			7 11		6
	522.67		5		
Dense Light Brown and Gray, Moist to Wet SAND, trace gravel (SP)			23		19
		-30	28		
Clay seam at 31.0 feet			50/3"		
	519.17				6
Split Spoon Refusal at 32.0 feet End of Boring					
		-40			

The Unconfined Compressive Strength (UCS) Failure Mode is indicated by (B-Bulge, S-Shear, P-Penetrometer)
The SPT (N value) is the sum of the last two blow values in each sampling zone (AASHTO T206)

BBS, form 137 (Rev. 8-99)

Illinois Department of Transportation
Division of Highways
GSG Consultants, Inc.

SOIL BORING LOG

Page 1 of 2

Date 6/16/22

ROUTE I-80 DESCRIPTION Retaining Wall No. 8 - Ramp AA LOGGED BY KA

SECTION I-80 over Des Plaines River LOCATION , SEC. 16, TWP. 35 N, RNG. 10 E,
Latitude , Longitude

COUNTY Will DRILLING RIG CME-75 HAMMER TYPE Auto
DRILLING METHOD HSA HAMMER EFF (%) 91

STRUCT. NO.
Station

BORING NO. RWB-72
Station 12+29.5420
Offset 22.11ft LT
Ground Surface Elev. 549.43 ft

Surface Water Elev. N/A ft
Stream Bed Elev. N/A ft

Groundwater Elev.:
First Encounter 508.4 ft ▼
Upon Completion N/A ft
After ___ Hrs. N/A ft

Description	Elev.	DEPTH (ft)	BLOWS (/6")	UCS Qu (tsf)	MOIST (%)
7 inches of Topsoil	548.85				
Brown, Moist FILL: SILTY CLAY, trace gravel			3		
			4 7	2.5 B	20
	545.93		3		
Stiff to Very Stiff Brown, Moist SILTY CLAY (CL)		-5	5 7	3.1 B	23
			3		
			3 4	1.5 B	22
			6		
		-10	7 8	2.3 P	17
	538.43				
Medium Dense Gray, Moist SILT (ML)			3		
			7 13		16
	536.43				
Very Stiff Brown and Gray, Moist to Very Moist SILTY CLAY, trace sand (CL/ML)			4		
		-15	7 10	2.1 B	15
			3		
Cobbles at 16.5 feet			6 11	2.1 B	16
	510.93		8		
		-20	13 23	2.5 P	15

Description	Elev.	DEPTH (ft)	BLOWS (/6")	UCS Qu (tsf)	MOIST (%)
Very Stiff Brown and Gray, Moist to Very Moist SILTY CLAY, trace sand (CL/ML) *(continued)* Cobbles at 21 feet			4		
			12 27	2.5 P	28
	525.93				
Loose to Medium Dense Brown, Dry to Moist SAND, with gravel, trace cobbles (SPG)			8		
			9 7		7
		-25			
			6		
			6 6		11
			4		
			4 5		2
		-30			
			4		
			2 4		8
			6		
		-35	4 3		9
			9		
			6 3		6
	510.93		5		
		-40	3 7		13

The Unconfined Compressive Strength (UCS) Failure Mode is indicated by (B-Bulge, S-Shear, P-Penetrometer)
The SPT (N value) is the sum of the last two blow values in each sampling zone (AASHTO T206)

BBS, form 137 (Rev. 8-99)

MODEL: Default
FILE NAME: 099W121-62F94-SH-21-Boring Log 5.dgn

SEB
1111 BURLINGTON AVE, SUITE 111 - LISLE, IL 60532
(630) 641-9900

USER NAME = jsandoval	DESIGNED - JSS	REVISED -	
	CHECKED - RRD	REVISED -	
PLOT SCALE = 0.167 ' / in.	DRAWN - TCK	REVISED -	
PLOT DATE = 10/28/2025	CHECKED - RRD	REVISED -	

STATE OF ILLINOIS
DEPARTMENT OF TRANSPORTATION

BORING LOGS (5 OF 6)
STRUCTURE NO. 099-W121

SHEET SH-21 OF SH-22 SHEETS

F.A.I. RTE.	SECTION	COUNTY	TOTAL SHEETS	SHEET NO.
80	2017-057F	WILL	1342	952
		CONTRACT NO. 62F94		
	ILLINOIS	FED. AID PROJECT		

10/28/2025 9:59:07 AM

Illinois Department of Transportation
Division of Highways
GSG Consultants, Inc.

SOIL BORING LOG

Date 6/16/22

ROUTE I-80 DESCRIPTION Retaining Wall No. 8 - Ramp AA LOGGED BY KA

SECTION I-80 over Des Plaines River LOCATION , SEC. 16, TWP. 35 N, RNG. 10 E,
Latitude , Longitude

COUNTY Will DRILLING RIG CME-75 HAMMER TYPE Auto
DRILLING METHOD HSA HAMMER EFF (%) 91

STRUCT. NO.
Station

BORING NO. RWB-72
Station 12+29.5420
Offset 22.11ft LT
Ground Surface Elev. 549.43 ft

Surface Water Elev. N/A ft
Stream Bed Elev. N/A ft

Groundwater Elev.:
First Encounter 508.4 ft ▼
Upon Completion N/A ft
After ____ Hrs. N/A ft

Description	Elev.	DEPTH (ft)	BLOWS (/6")	UCS Qu (tsf)	MOIST (%)
Loose to Very Dense Light Brown and Black, Moist SAND, with gravel, trace cobbles (SPG) *(continued)* Clay seam from 41 to 42.5 feet	506.93		4 8 11		11
Very Dense Gray, Moist GRAVEL (GP) Split Spoon Refusal at 43.5 feet	505.93		50/2"		
Light Gray LIMESTONE, slightly weathered, moderately fractured		-45			10
Run 1: 43.5' - 53.5' Recovery: 100% RQD: 61.7% (Fair)		-50			
End of Boring	495.93	-55 -60			

The Unconfined Compressive Strength (UCS) Failure Mode is indicated by (B-Bulge, S-Shear, P-Penetrometer)
The SPT (N value) is the sum of the last two blow values in each sampling zone (AASHTO T206)

BBS, form 137 (Rev. 8-99)

MODEL: Default
FILE NAME: 099W121-62F94-SH-22-Boring Log 6.dgn

SEB
1111 BURLINGTON AVE., SUITE 111 - LISLE, IL 60532
(630) 641-9900

USER NAME = Jsandoval	DESIGNED - JSS	REVISED -	
	CHECKED - RRD	REVISED -	
PLOT SCALE = 0.167 ' / in.	DRAWN - TCK	REVISED -	
PLOT DATE = 10/28/2025	CHECKED - RRD	REVISED -	

STATE OF ILLINOIS
DEPARTMENT OF TRANSPORTATION

BORING LOGS (6 OF 6)
STRUCTURE NO. 099-W121

SHEET SH-22 OF SH-22 SHEETS

F.A.I. RTE.	SECTION	COUNTY	TOTAL SHEETS	SHEET NO.
80	2017-057F	WILL	1342	953
		CONTRACT NO. 62F94		
		ILLINOIS	FED. AID PROJECT	

10/28/2025 9:59:28 AM

Benchmark: Iron Rod with Cap I-80 Sta. 67+29.78, 390.65' LT
N 1,765,102.773 and E 1,052,594.602
Elev.= 546.815

Existing Structures: None.

Traffic Control: Existing entrance ramp traffic to be detoured during construction. I-80 traffic to be maintained.

Salvage: None.

DESIGN SPECIFICATIONS

2020 AASHTO LRFD Bridge Design Specifications, 9th Edition

DESIGN STRESSES

PRECAST UNITS

f'c = 4,500 psi

FIELD UNITS

f'c = 3,500 psi

fy = 60,000 psi (Reinforcement)

NOTES:

1. Stations and offsets are measured from the ℄ of Ramp C to the front face of precast panels.
2. For General Notes, Index of Sheets, Profile Grade Line, Curve Data and Total Bill of Material, see Sheet SI-02.
3. For Table 1 - Wall Elevations 9A, Typical Sections thru Wall, see Sheet SI-03.

LEGEND

- Soil Boring
- Exist. Underground Electric
- Exist. Underground Gasline
- Exist. Underground Waterline
- Exist. Underground Sanitary Sewer
- Exist. ROW Access Control (To be removed)
- Exist. ROW
- Prop. Storm Sewer
- Prop. Pipe Underdrain
- Existing Tree
- F.F. Front Face
- B.F. Back Face
- Proposed Ditch
- Approx. Limits of Reinforced Soil Mass
- Exist. Fence
- Prop. Fence

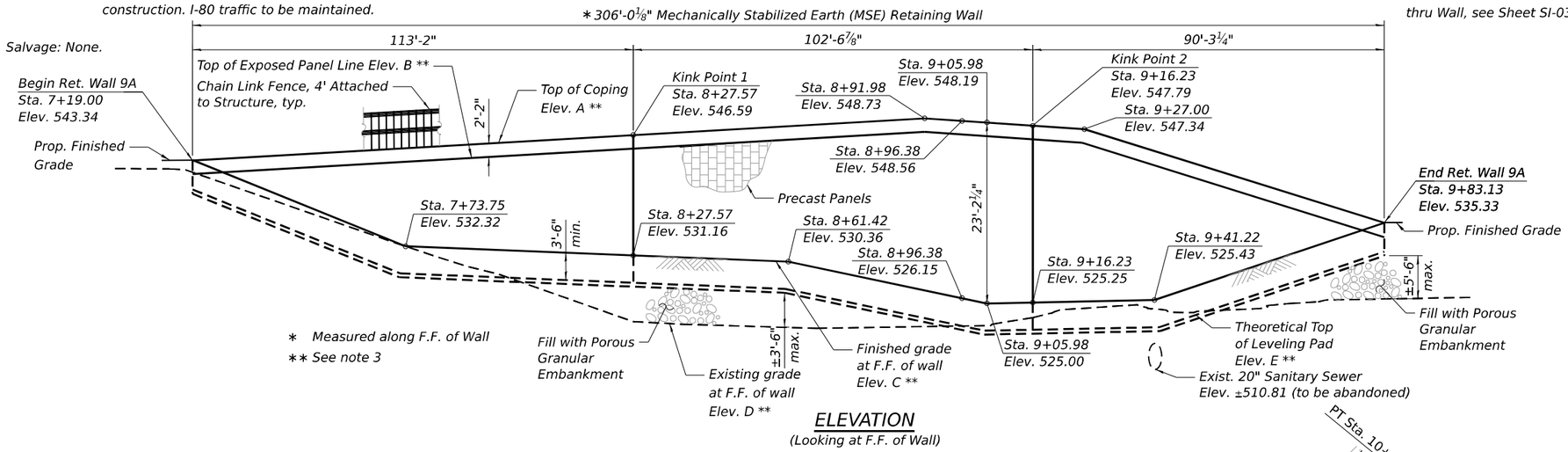

ELEVATION

(Looking at F.F. of Wall)

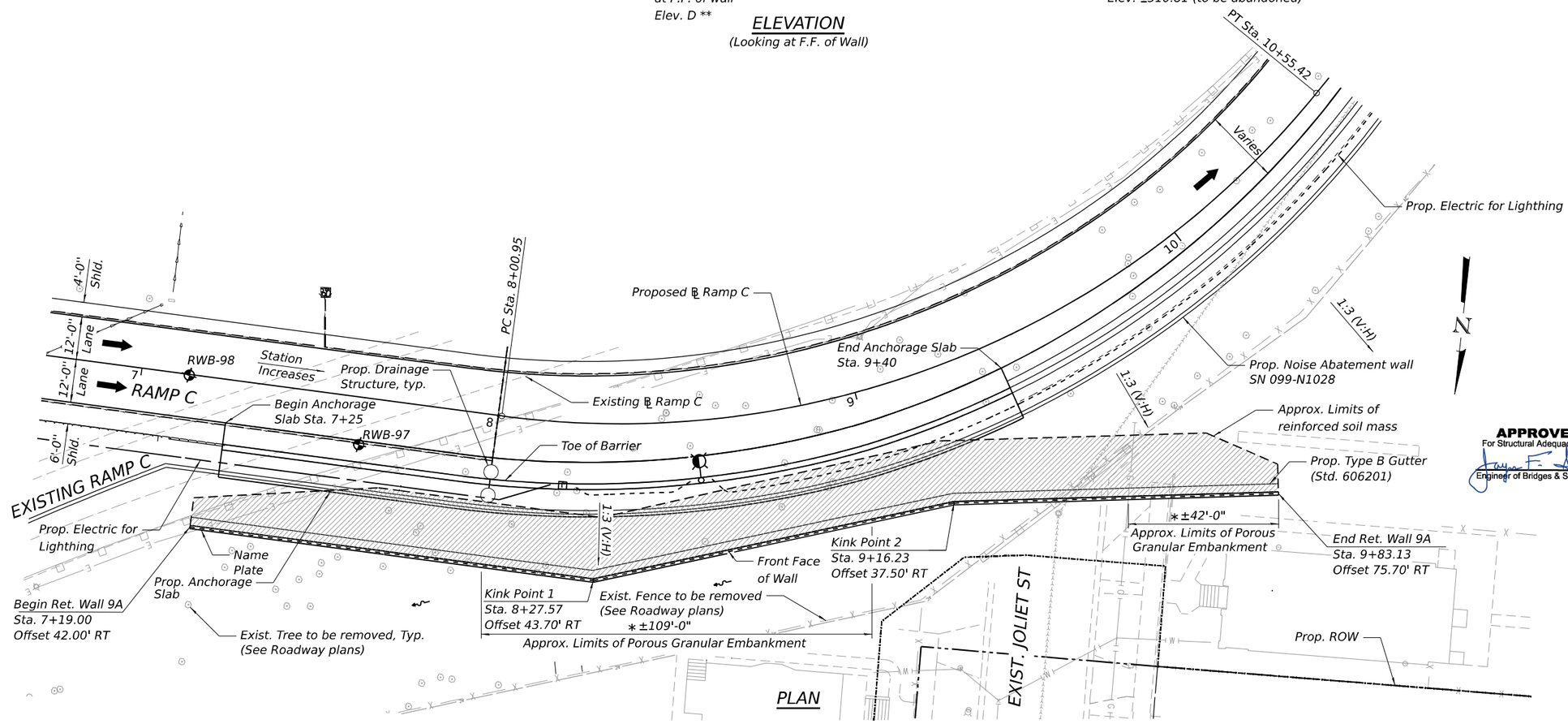

PLAN

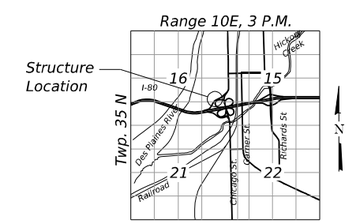

LOCATION SKETCH

APPROVED
For Structural Adequacy Only
Engineer of Bridges & Structures

LICENSED STRUCTURAL ENGINEER
RYAN R DOERRER
081-007941
STATE OF ILLINOIS

Date: 10-31-2025
Expires: 11-30-2026

GENERAL PLAN AND ELEVATION
RETAINING WALL 9A ALONG RAMP C
F.A.I. RTE. 80 - SEC. 2017-057F
WILL COUNTY
STA. 7+19.00 TO STA. 9+83.13
STRUCTURE NO. 099-W128

SEB
1111 BURLINGTON AVE., SUITE 111 - LISLE, IL 60532
(630) 641-9800

USER NAME = jsandoval	DESIGNED - JSS	REVISED -	
	CHECKED - RRD	REVISED -	
PLOT SCALE = 0:0.1667 ':' / in.	DRAWN - TCK	REVISED -	
PLOT DATE = 10/28/2025	CHECKED - RRD	REVISED -	

STATE OF ILLINOIS
DEPARTMENT OF TRANSPORTATION

SHEET SI-01 OF SI-09 SHEETS

F.A.I. RTE.	SECTION	COUNTY	TOTAL SHEETS	SHEET NO.
80	2017-057F	WILL	1342	954
		CONTRACT NO. 62F94		
		ILLINOIS	FED. AID PROJECT	

MODEL: Default
FILE NAME: 099W128-62F94-SI-01-GPE.dgn
10/28/2025 9:59:50 AM

GENERAL NOTES:

1. Reinforcement bars designated (E) shall be epoxy coated.
2. Cast-in-place concrete and reinforcement steel required for coping shall be included in the payment for Mechanical Stabilized Earth Retaining wall.
3. All Exposed concrete edges shall have a ¾" x 45° chamfer, except where shown otherwise. Chamfer on vertical edges shall be continued a minimum of one foot below the finished ground level.
4. Protective Coat shall be applied to the exposed faces of the cast-in-place coping.
5. The Contractor shall field verify locations of existing underground utilities prior to beginning work. Existing utilities in conflict with retaining wall construction shall be abandoned or relocated according to the directions given on the Civil Plans. The Contractor shall take all necessary precautions to protect existing utilities to remain during all stages of construction. Any damage to the existing utilities to remain caused by the Contractor in the performance of the work shall be repaired by the Contractor, to the satisfaction of the Engineer, at no cost to the Department.
6. Stations and offsets are measured along the baseline of the Chicago Street Ramp C to the front face of precast panels.
7. Porous Granular Embankment shall be placed and compacted to a minimum of 95% of the maximum dry density in accordance with IDOT standard construction requirements at locations where the proposed theoretical top of leveling pad is above the existing gound line.

SUGGESTED SEQUENCE OF CONSTRUCTION

1. Place Porous Granular Embankment in areas where the bottom of the proposed leveling pad is at higher elevation than the existing ground.
2. Excavate existing ground where required and build MSE wall leveling pad.
3. Compact Porous Granular Embankment before placing MSE wall leveling pad.
4. Construct leveling pad and place MSE wall to the required elevation.
5. Construct cast in place concrete coping.
6. Grade remaining finish grade slope to meet proposed roadway.
7. Construct Anchorage Slab.
8. Construct Noise Abatement Wall on Anchorage Slab.

INDEX OF SHEETS

TOTAL BILL OF MATERIAL

ITEM	UNIT	TOTAL
Structure Excavation	Cu Yd	254
Protective Coat	Sq Yd	127
Name Plates	Each	1
Mechanically Stabilized Earth Retaining Wall	Sq Ft	4,806
Porous Granular Embankment	Cu Yd	141
Chain Link Fence, 4' Attached to Structure	Foot	306

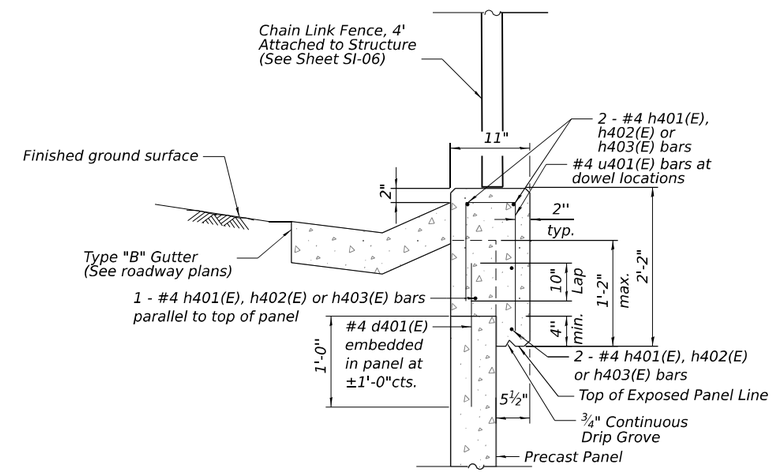

COPING DETAIL

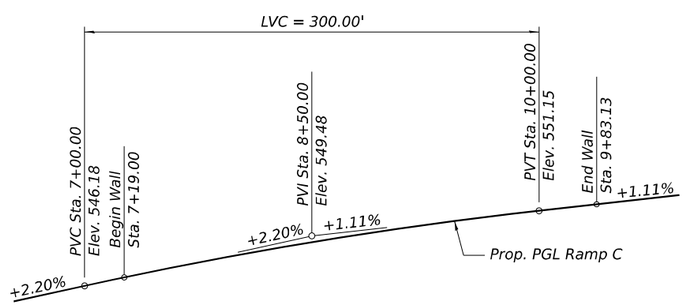

RAMP C PROFILE GRADE

(Along Prop. ℄ Ramp C)

PR RAMP C CURVE 1

P.I. Sta. = 9+40.44
Δ = 58°19'14" (LT)
D = 22°55'06"
R = 250.00'
T = 139.49'
L = 254.47'
E = 36.28'
e = 6.0%
P.C. Sta. = 8+00.95
P.T. Sta. = 10+55.42

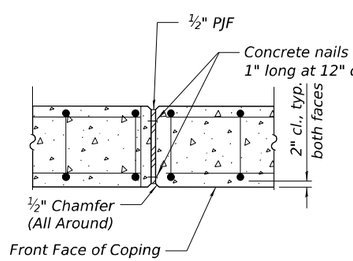

Coping Expansion Joint - PLAN

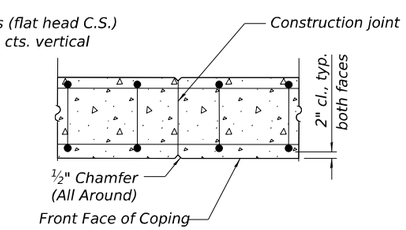

Coping Construction Joint - PLAN

(Provide construction joints at 30'-0" max. and 20'-0" min.)

STA. 7+19.00 TO 9+83.13
BUILT 20-- BY
STATE OF ILLINOIS
F.A.I. Rt. 80 Sec. 2017-057F
LOADING HL-93
STR. NO. 099-W128

NAME PLATE

See Std. 515001

MODEL: Default
FILE NAME: 099W128-62F94-SI-02-GenNotesandBOM.dgn

SEB
1111 BURLINGTON AVE., SUITE 111 - LISLE, IL 60532
(630) 641-9900

USER NAME = jsandoval	DESIGNED - JSS	REVISED -	
	CHECKED - RRD	REVISED -	
PLOT SCALE = 0.167 ' / in.	DRAWN - TCK	REVISED -	
PLOT DATE = 10/28/2025	CHECKED - RRD	REVISED -	

STATE OF ILLINOIS
DEPARTMENT OF TRANSPORTATION

GENERAL DATA
STRUCTURE NO. 099-W128

SHEET SI-02 OF SI-09 SHEETS

F.A.I. RTE.	SECTION	COUNTY	TOTAL SHEETS	SHEET NO.
80	2017-057F	WILL	1342	955

CONTRACT NO. 62F94

ILLINOIS | FED. AID PROJECT

10/28/2025 10:00:03 AM

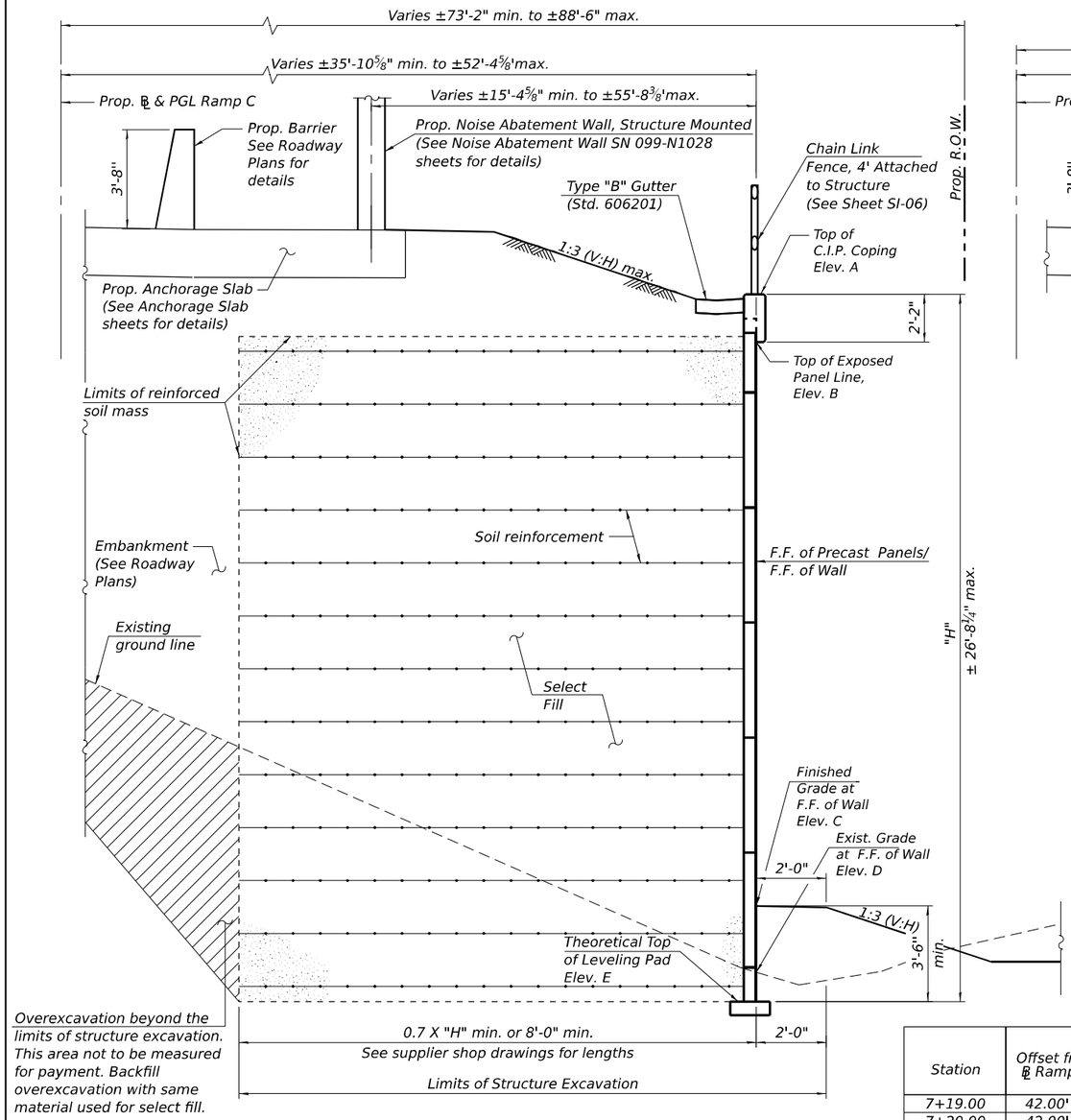

TYPICAL WALL SECTION

(Showing Leveling Pad below existing grade.)
(Looking West)

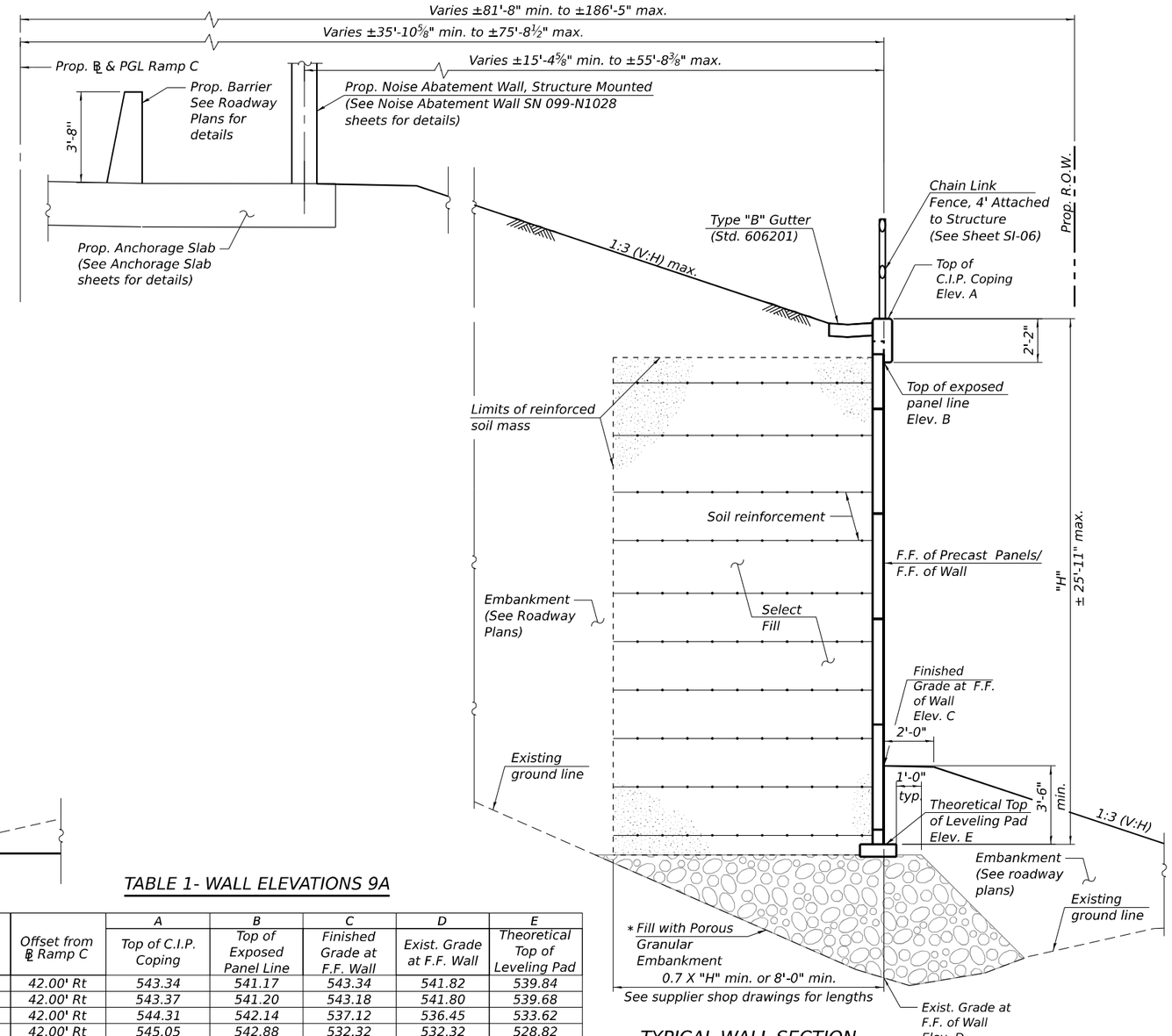

TYPICAL WALL SECTION

(Showing Leveling Pad above existing grade.)
(Looking West)

* Required at all locations where top of leveling pad is above the existing ground line

TABLE 1- WALL ELEVATIONS 9A

Station	Offset from ℄ Ramp C	A Top of C.I.P. Coping	B Top of Exposed Panel Line	C Finished Grade at F.F. Wall	D Exist. Grade at F.F. Wall	E Theoretical Top of Leveling Pad
7+19.00	42.00' Rt	543.34	541.17	543.34	541.82	539.84
7+20.00	42.00' Rt	543.37	541.20	543.18	541.80	539.68
7+50.00	42.00' Rt	544.31	542.14	537.12	536.45	533.62
7+73.75	42.00' Rt	545.05	542.88	532.32	532.32	528.82
7+80.00	42.00' Rt	545.24	543.07	532.20	531.20	528.70
8+10.00	42.19' Rt	546.18	544.01	531.57	526.35	528.07
8+27.57	43.70' Rt	546.72	544.56	531.16	523.22	527.66
8+40.00	40.54' Rt	547.11	544.94	530.86	522.20	527.36
8+61.42	36.95' Rt	547.78	545.61	530.36	521.90	526.86
8+70.00	36.12' Rt	548.05	545.88	529.32	521.95	525.82
8+91.98	35.54' Rt	548.73	546.56	525.60	522.20	522.10
9+00.00	35.89' Rt	548.41	546.24	525.72	522.30	522.22
9+05.98	36.30' Rt	548.19	546.01	525.00	522.20	521.50
9+16.23	37.50' Rt	547.79	545.60	525.25	523.00	521.75
9+27.00	41.66' Rt	547.34	545.17	525.26	524.40	521.76
9+30.00	42.94' Rt	546.70	544.53	525.29	524.55	521.79
9+41.22	47.60' Rt	544.30	542.13	525.43	524.38	521.93
9+60.00	58.86' Rt	540.28	538.11	529.65	524.25	526.15
9+83.13	75.70' Rt	535.33	533.16	535.33	525.55	531.83

NOTE:

Anchorage Slab Mounted Noise Abatement wall shown on Sections. Ground Mounted Noise Abatement wall not shown.

MODEL: Default
FILE NAME: 099W128-62F94-SI-03-Sec&Details.dgn

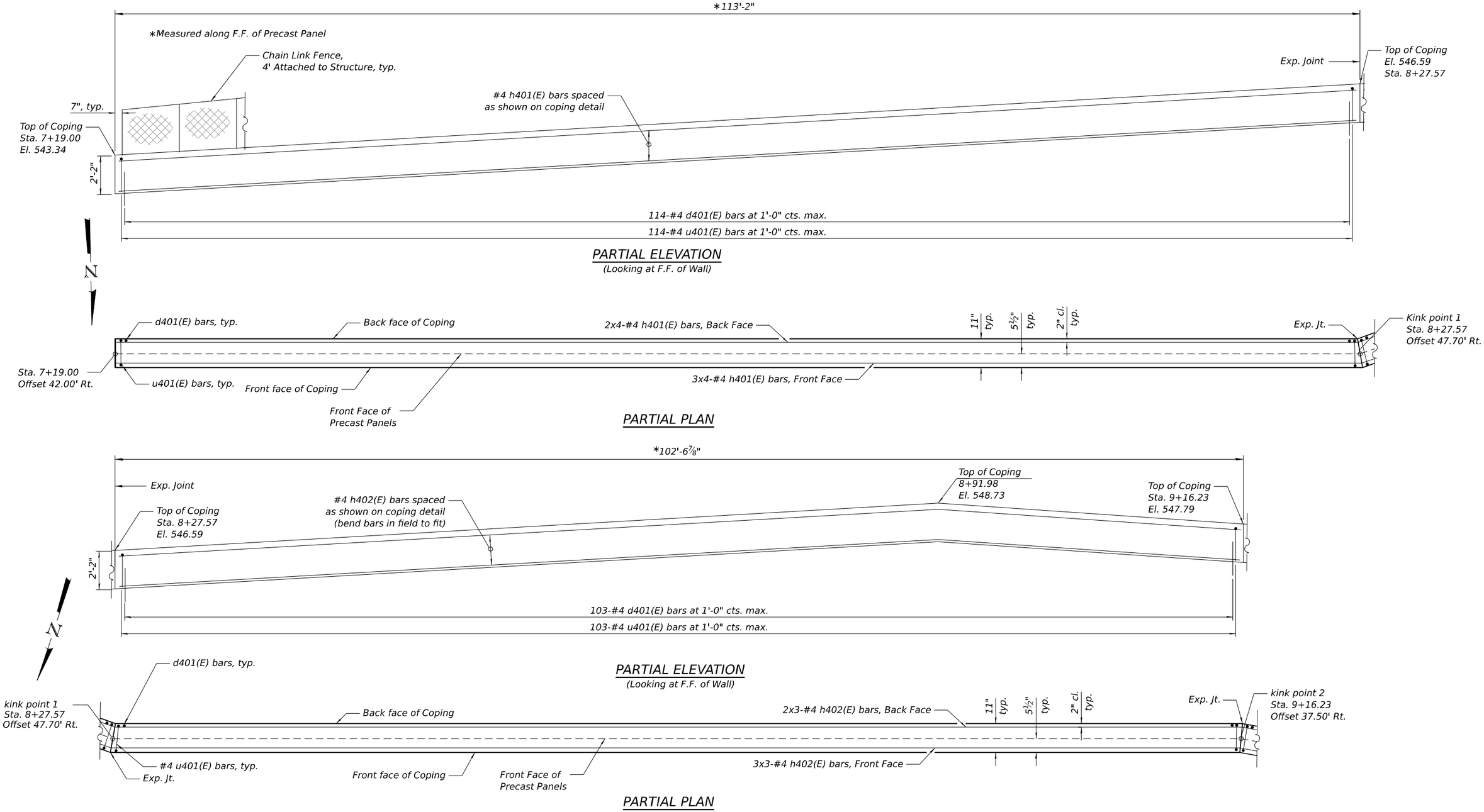

NOTES:

1. Bars noted thus, 3x2-#5 indicates 3 lines of bars with 2 lengths of bar per line.
2. For control point station, offset, and elevations, see Sheet SI-03.
3. For Typical Section, see Sheet SI-03.
4. For coping detail, see Sheet SI-02.
5. The cost of the concrete and the reinforcement steel required for the coping shall be included in the cost of Mechanically Stabilized Earth Retaining Wall.
6. For coping construction joint spacing requirements see Coping Construction Joint - Plan Detail, see Sheet SI-02.

MIN. LAP LENGTH

#4 Bar = 2'-11''

MODEL: Default
FILE NAME: 099W128-62F94-SI-04-Plan-Elev1.dgn

SGS 1111 BURLINGTON AVE., SUITE 111 - LISLE, IL 60532 (630) 641-9800	USER NAME = jsandoval	DESIGNED - JSS	REVISED -	STATE OF ILLINOIS DEPARTMENT OF TRANSPORTATION	COPING PLAN AND ELEVATION 1 STRUCTURE NO. 099-W128	F.A.I. RTE.	SECTION	COUNTY	TOTAL SHEETS / SHEET NO.
		CHECKED - RRD	REVISED -			80	2017-057F	WILL	1342 / 957
	PLOT SCALE = 0:0.1667 ':' / in.	DRAWN - TCK	REVISED -					CONTRACT NO. 62F94	
	PLOT DATE = 10/28/2025	CHECKED - RRD	REVISED -		SHEET SI-04 OF SI-09 SHEETS		ILLINOIS	FED. AID PROJECT	

10/28/2025 10:00:28 AM

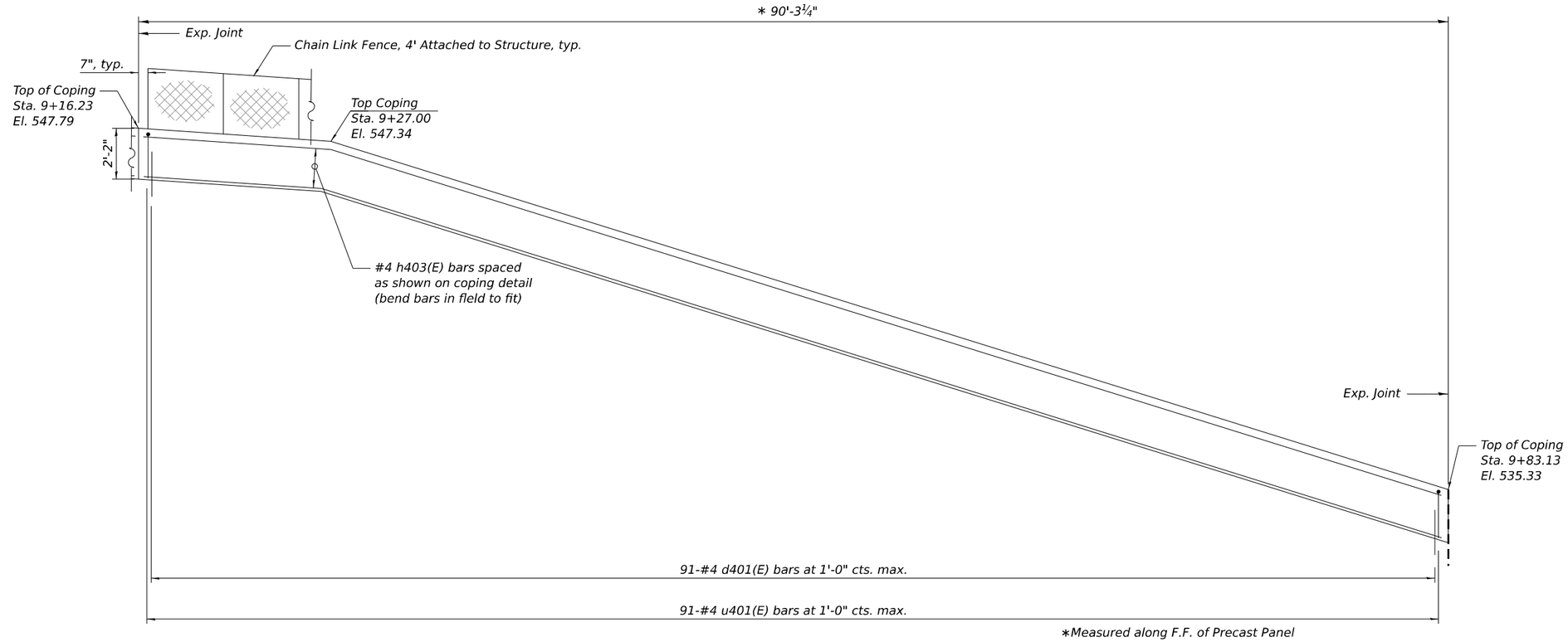

PARTIAL ELEVATION

(Looking at F.F. of Wall)

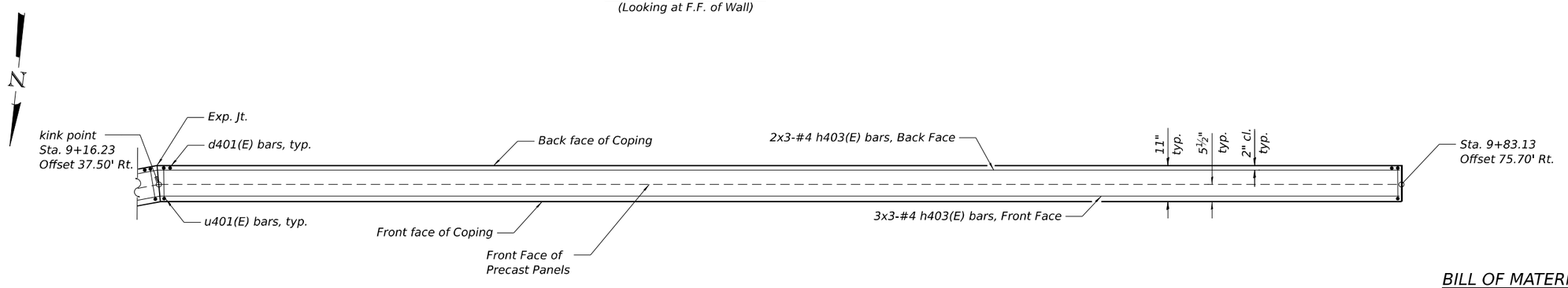

PARTIAL PLAN

BILL OF MATERIAL

(Coping only- For Information Only)

Bar	No.	Size	Length	Shape
d401(E)	308	#4	2'-0"	———
h401(E)	20	#4	30'-6"	———
h402(E)	15	#4	36'-3"	———
h403(E)	15	#4	32'-1"	———
u401(E)	308	#4	3'-11"	⊓
Concrete Structures			Cu. Yd.	20.8
Reinforcement Bars, Epoxy Coated			Pound	2,310

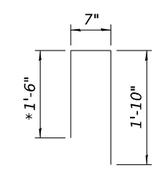

BAR u401(E)

* cut bar to fit

MIN. LAP LENGTH

#4 Bar = 2'-11"

NOTES:

1. See Sheet SI-04 for notes.

MODEL: Default
FILE NAME: 099W128-62F94-SI-05-Plan-Elev2.dgn

10/28/2025 10:00:42 AM

SEA
1111 BURLINGTON AVE., SUITE 111 - LISLE, IL 60532
(630) 641-9800

USER NAME = jsandoval	DESIGNED - JSS	REVISED -	
	CHECKED - RRD	REVISED -	
PLOT SCALE = 0:0.1667 ':' / in.	DRAWN - TCK	REVISED -	
PLOT DATE = 10/28/2025	CHECKED - RRD	REVISED -	

STATE OF ILLINOIS
DEPARTMENT OF TRANSPORTATION

COPING PLAN AND ELEVATION 2
STRUCTURE NO. 099-W128

SHEET SI-05 OF SI-09 SHEETS

F.A.I. RTE.	SECTION	COUNTY	TOTAL SHEETS	SHEET NO.
80	2017-057F	WILL	1342	958
		CONTRACT NO. 62F94		
		ILLINOIS	FED. AID PROJECT	

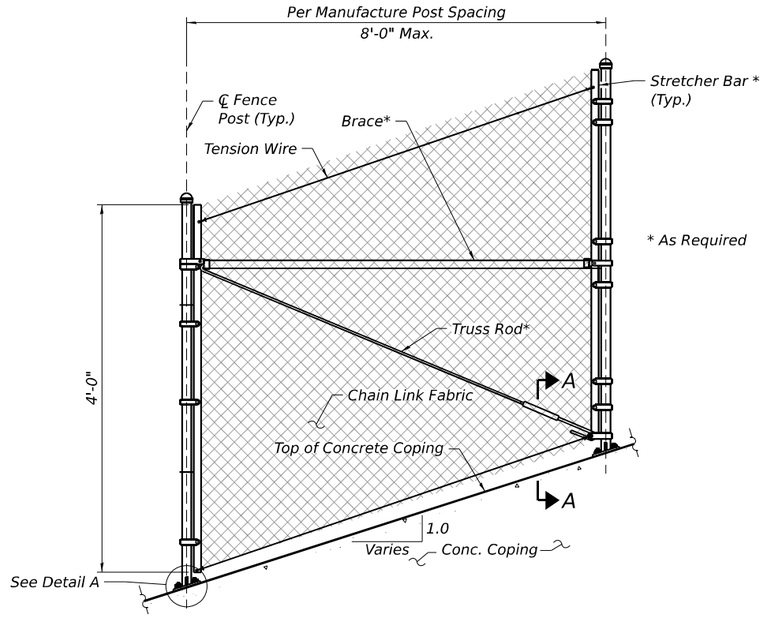

CHAIN LINK FENCE ELEVATION

(Along top of Concrete Coping)

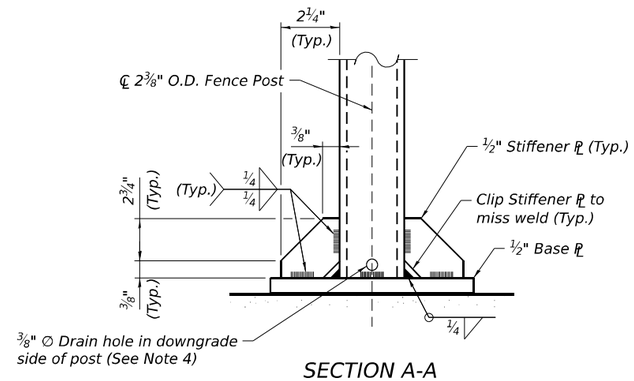

SECTION A-A

(Fence Post base plate connection)

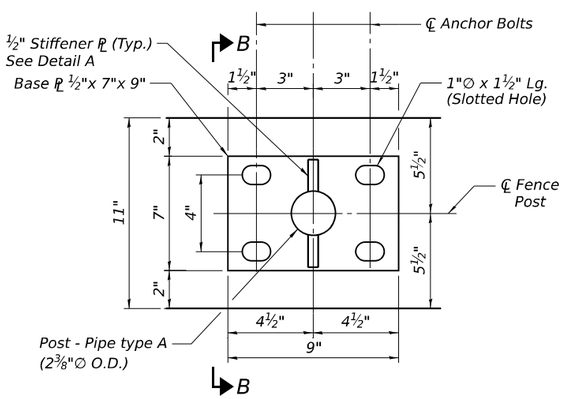

Base PL

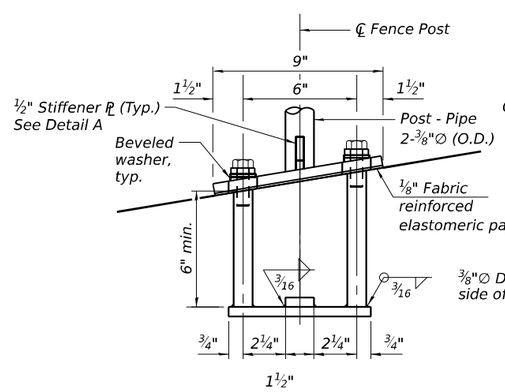

Detail A

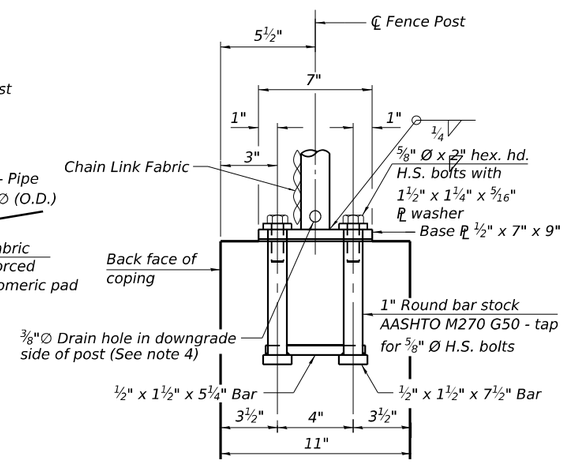

SECTION B-B

(Stiffener not shown for clarity)

NOTES:

1. See IDOT Highway Standard Drawing 664001-02 for additional fence details.
2. Fence shall be continuous over concrete coping expansion joints.
3. At all fence locations, the end posts shall be 7" from the the coping expansion joint and ends.
4. Drill Drain hole to miss fillet weld and prior to galvanizing. Hole shall be drilled as close to the weld as possible.
5. Edge distance from a construction or expansion joint in the proposed copings to an expansion anchor shall be per manufacturer's specifications.
6. For CIP Concrete coping details see sheet SI-02.
7. Place reinforcement bars to miss anchor rod locations.
8. All heavy hex nuts shall be according to ASTM A 563 grade DH.
9. All fully threaded anchor rods shall be ASTM F1554 grade 105.
10. The post base plate shall be fastened to the top of the cast in place coping snug tight and given an additional ⅛" turn.

BASE PLATE NOTES:

A. Base Plates shall be fabricated from material meeting the requirements of AASHTO M270 Grade 50.

B. Base Plates and Posts shall be Hot Dipped Galvanized after fabrication in accordance with AASHTO M111.

C. All fabrication shall be per Article 505.04 of the Standard Specifications.

D. All bolts, nuts, washers and anchors shall be galvanized according to AASHTO M 232.

ANCHORAGE ASSEMBLY

In lieu of the cast-in-place anchor device shown, the Contractor has the option of drilling and setting ⅝" Ø fully threaded anchor rods with the same plate washers as specified above and heavy hex lock nuts according to Article 509.06 of the Standard Specifications. Embedment shall be according to the manufacturer's specifications.

BILL OF MATERIAL

Item	Unit	Quantity
Chain Link Fence, 4' Attached to Structure	Foot	306

MODEL: Default
FILE NAME: 099W128-62F94-SI-06-Chain Link Fence.dgn

SEA
1111 BURLINGTON AVE., SUITE 111 - LISLE, IL 60532
(630) 641-9600

USER NAME = jsandoval	DESIGNED - JSS	REVISED -	
	CHECKED - RRD	REVISED -	
PLOT SCALE = 0:1.9999 ':" / in.	DRAWN - TCK	REVISED -	
PLOT DATE = 10/28/2025	CHECKED - RRD	REVISED -	

STATE OF ILLINOIS
DEPARTMENT OF TRANSPORTATION

CHAIN LINK FENCE DETAILS
STRUCTURE NO. 099-W128

SHEET SI-06 OF SI-09 SHEETS

F.A.I. RTE.	SECTION	COUNTY	TOTAL SHEETS	SHEET NO.
80	2017-057F	WILL	1342	959
		CONTRACT NO. 62F94		
		ILLINOIS	FED. AID PROJECT	

10/28/2025 10:00:53 AM

Illinois Department of Transportation
Division of Highways
GSG

SOIL BORING LOG

Page 1 of 1

Date 9/15/22

ROUTE I-80 DESCRIPTION Retaining Wall No. 9A - Ramp C LOGGED BY KA

SECTION C-91-109-22 LOCATION , SEC. 16, TWP. 35 N, RNG. 10 E,
Latitude 41.5130955, Longitude -88.0833101

COUNTY Will DRILLING RIG Diedrich D-50 HAMMER TYPE Auto
DRILLING METHOD HSA HAMMER EFF (%) 96

STRUCT. NO. 099-W128
Station

BORING NO. RWB-97
Station 7+62.5329
Offset 13.11ft RT
Ground Surface Elev. 543.52 ft

Surface Water Elev. N/A ft
Stream Bed Elev. N/A ft

Groundwater Elev.:
First Encounter Dry ft
Upon Completion N/A ft
After ___ Hrs. N/A ft

Description	Elev.	DEPTH (ft)	BLOWS (/6")	UCS Qu (tsf)	MOIST (%)
3 inches of Topsoil	543.27				
Brown, Moist FILL: SILTY CLAY LOAM, trace sand, gravel			5		
			7	1.3	10
	541.02		5	P	
Brown, Moist FILL: SILTY CLAY, trace gravel					
			3		
			3	2.5	21
		-5	3	P	
Cobbles at 6 feet			2		
			2	0.8	23
			3	P	
			2		
			3	2.5	19
	533.52	-10	5	P	
Brown and Gray, Moist FILL: SILTY CLAY, trace gravel					
			5		
			8	4.4	23
			6	B	
			5		
			6	2.5	19
		-15	7	B	
Cobbles at 16 feet			3		
			5	1.5	18
			50/3"	P	
			50/2"		
					NR
	523.52	-20			

Description	Elev.	DEPTH (ft)	BLOWS (/6")	UCS Qu (tsf)	MOIST (%)
Medium Dense to Very Dense Light Gray and Brown, Dry to Moist SAND, with gravel (SPG)			6		
			9		5
			50/2"		
Clay seam at 23.5 feet			11		
			9		11
		-25	20		
			50/1"		
					NR
	515.02				
Gray LIMESTONE, moderately weathered, moderately fractured					
Run 1: 28.5' - 38.5' Recovery: 85.8% RQD: 55.1% (Fair)					
2-inch gravel seam at 28.5 feet		-30			
		-35			
	505.02				
End of Boring		-40			

The Unconfined Compressive Strength (UCS) Failure Mode is indicated by (B-Bulge, S-Shear, P-Penetrometer)
The SPT (N value) is the sum of the last two blow values in each sampling zone (AASHTO T206)

BBS, form 137 (Rev. 8-99)

Illinois Department of Transportation
Division of Highways
GSG

SOIL BORING LOG

Page 1 of 1

Date 9/15/22

ROUTE I-80 DESCRIPTION Retaining Wall No. 9A - Ramp C LOGGED BY KA

SECTION C-91-109-22 LOCATION , SEC. 16, TWP. 35 N, RNG. 10 E,
Latitude 41.5131277, Longitude -88.0831292

COUNTY Will DRILLING RIG Diedrich D-50 HAMMER TYPE Auto
DRILLING METHOD HSA HAMMER EFF (%) 96

STRUCT. NO. 099-W128
Station

BORING NO. RWB-98
Station 7+13.2830
Offset 0.20ft LT
Ground Surface Elev. 542.24 ft

Surface Water Elev. N/A ft
Stream Bed Elev. N/A ft

Groundwater Elev.:
First Encounter Dry ft
Upon Completion N/A ft
After ___ Hrs. N/A ft

Description	Elev.	DEPTH (ft)	BLOWS (/6")	UCS Qu (tsf)	MOIST (%)
3 inches of Topsoil	541.99				
Dark Brown, Moist FILL: SILTY CLAY, trace sand, gravel			6		
			4	0.5	19
	539.74		3	P	
Brown and Gray, Moist FILL: SILTY CLAY, trace gravel					
			3		
			3	2.5	21
		-5	3	P	
			2		
			2	1.5	20
			3	P	
			3		
			2	2.0	21
		-10	3	P	
			3		
			3	1.9	16
	529.74		3	B	
Dark Brown and Dark Gray, Moist FILL: SILTY CLAY, trace sand, gravel			3		
			5	1.9	21
		-15	4	B	
Cobbles at 16 feet			3		
			4	1.9	22
			9	B	
	523.74				
Loose to Medium Dense Light Gray, Dry SAND, with gravel (SPG)			28		
			11		4
		-20	7		

Description	Elev.	DEPTH (ft)	BLOWS (/6")	UCS Qu (tsf)	MOIST (%)
Loose to Medium Dense Light Gray, Dry SAND, with gravel (SPG) *(continued)*			5		
			5		NR
	519.74		1		
Medium Dense to Very Dense Brown and Light Gray, Moist to Wet SAND, with gravel (SPG)			11		
			15		15
		-25	8		
			14		
			14		16
			50/3"		
	513.74				
Auger refusal at 28.5 feet End of Boring					
		-30			
		-35			
		-40			

The Unconfined Compressive Strength (UCS) Failure Mode is indicated by (B-Bulge, S-Shear, P-Penetrometer)
The SPT (N value) is the sum of the last two blow values in each sampling zone (AASHTO T206)

BBS, form 137 (Rev. 8-99)

MODEL: Default
FILE NAME: 099W128-62F94-SI-07-Boring Log 1.dgn

SEB
1111 BURLINGTON AVE., SUITE 111 - LISLE, IL 60532
(630) 641-9900

USER NAME = jsandoval	DESIGNED - JSS	REVISED -	
	CHECKED - RRD	REVISED -	
PLOT SCALE = 0:1.9999 ':" / in.	DRAWN - TCK	REVISED -	
PLOT DATE = 10/28/2025	CHECKED - RRD	REVISED -	

STATE OF ILLINOIS
DEPARTMENT OF TRANSPORTATION

BORING LOGS 1 (1 OF 3)
STRUCTURE NO. 099-W128

SHEET SI-07 OF SI-09 SHEETS

F.A.I. RTE.	SECTION	COUNTY	TOTAL SHEETS	SHEET NO.
80	2017-057F	WILL	1342	960
		CONTRACT NO. 62F94		
		ILLINOIS	FED. AID PROJECT	

10/28/2025 10:01:02 AM

Placeholder for table

RWB-108

Placeholder for table

RWB-109

MODEL: Default
FILE NAME: 099W128-62F94-SI-08-Boring Log 2.dgn

SEB
1111 BURLINGTON AVE., SUITE 111 - LISLE, IL 60532
(630) 641-9900

USER NAME = jsandoval	DESIGNED - JSS	REVISED -	
	CHECKED - RRD	REVISED -	
PLOT SCALE = 0:1.9999 ':" / in.	DRAWN - TCK	REVISED -	
PLOT DATE = 10/28/2025	CHECKED - RRD	REVISED -	

STATE OF ILLINOIS
DEPARTMENT OF TRANSPORTATION

BORING LOGS 2 (2 OF 3)
STRUCTURE NO. 099-W128

SHEET SI-08 OF SI-09 SHEETS

F.A.I. RTE.	SECTION	COUNTY	TOTAL SHEETS	SHEET NO.
80	2017-057F	WILL	1342	961
		CONTRACT NO. 62F94		
	ILLINOIS	FED. AID PROJECT		

10/28/2025 10:01:22 AM

Placeholder for table

RWB-110

Placeholder for table

RWB-111

MODEL: Default
FILE NAME: 099W128-62F94-SI-09-Boring Log 3.dgn

SEB
1111 BURLINGTON AVE., SUITE 111 - LISLE, IL 60532
(630) 641-9900

USER NAME = jsandoval	DESIGNED - JSS	REVISED -	
	CHECKED - RRD	REVISED -	
PLOT SCALE = 0:1.9999 ':" / in.	DRAWN - TCK	REVISED -	
PLOT DATE = 10/28/2025	CHECKED - RRD	REVISED -	

STATE OF ILLINOIS
DEPARTMENT OF TRANSPORTATION

BORING LOGS 3 (3 OF 3)
STRUCTURE NO. 099-W128

SHEET SI-09 OF SI-09 SHEETS

F.A.I. RTE.	SECTION	COUNTY	TOTAL SHEETS	SHEET NO.
80	2017-057F	WILL	1342	962
		CONTRACT NO. 62F94		
	ILLINOIS	FED. AID PROJECT		

10/28/2025 10:01:30 AM

Benchmark: Iron Rod with Cap I-80 Sta. 67+29.78, 390.65' LT
N 1,765,102.773 and E 1,052,594.602
Elev.= 546.815

Existing Structures: None.

Traffic Control: Existing entrance ramp traffic to be detoured during construction. I-80 traffic to be maintained.

Salvage: None.

DESIGN SPECIFICATIONS

2020 AASHTO LRFD Bridge Design Specifications, 9th Edition

DESIGN STRESSES

PRECAST UNITS

f'c = 4,500 psi

FIELD UNITS

f'c = 3,500 psi

fy = 60,000 psi (Reinforcement)

NOTES:

1. Stations and offsets are measured from the ℄ of Ramp C to the front face of precast panels.
2. For General Notes, Index of Sheets, Profile Grade, Curve Data and Total Bill of Material, see Sheet SJ-02.
3. For Table 1 - Wall Elevations 9B, Typical Section thru Wall, see Sheet SJ-03.

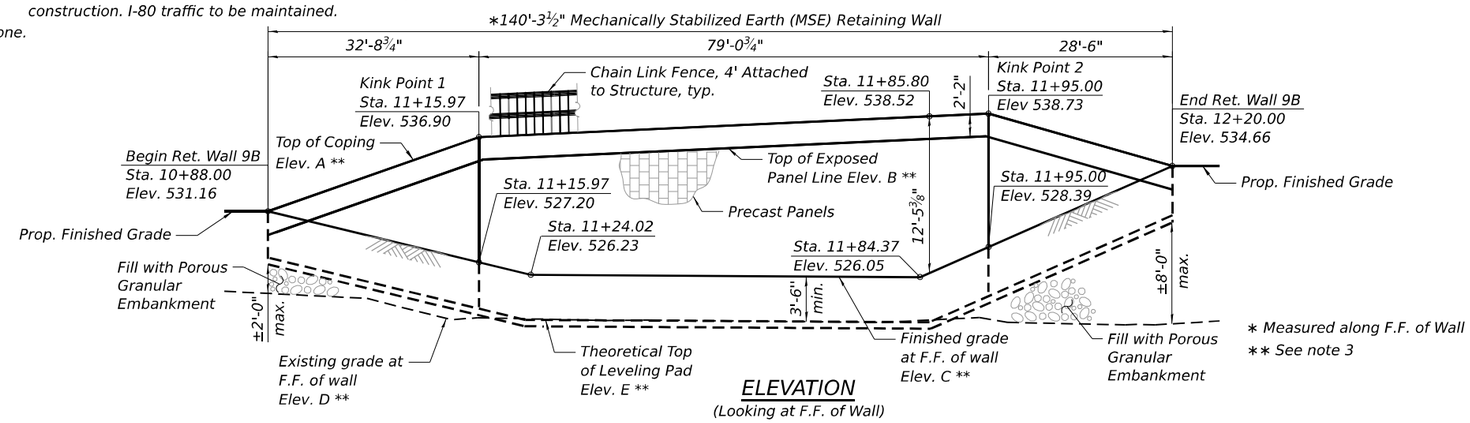

∗ Measured along F.F. of Wall
∗∗ See note 3

ELEVATION

(Looking at F.F. of Wall)

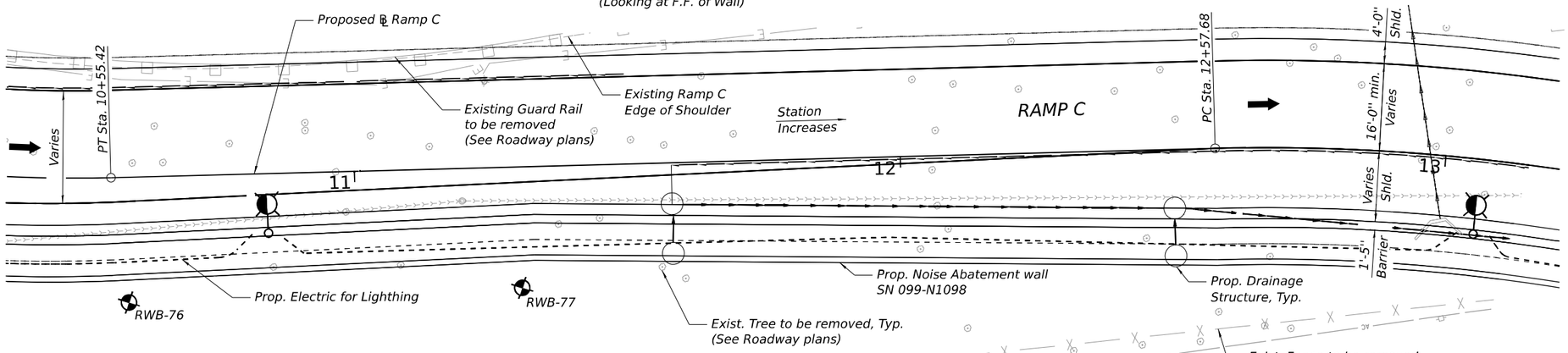

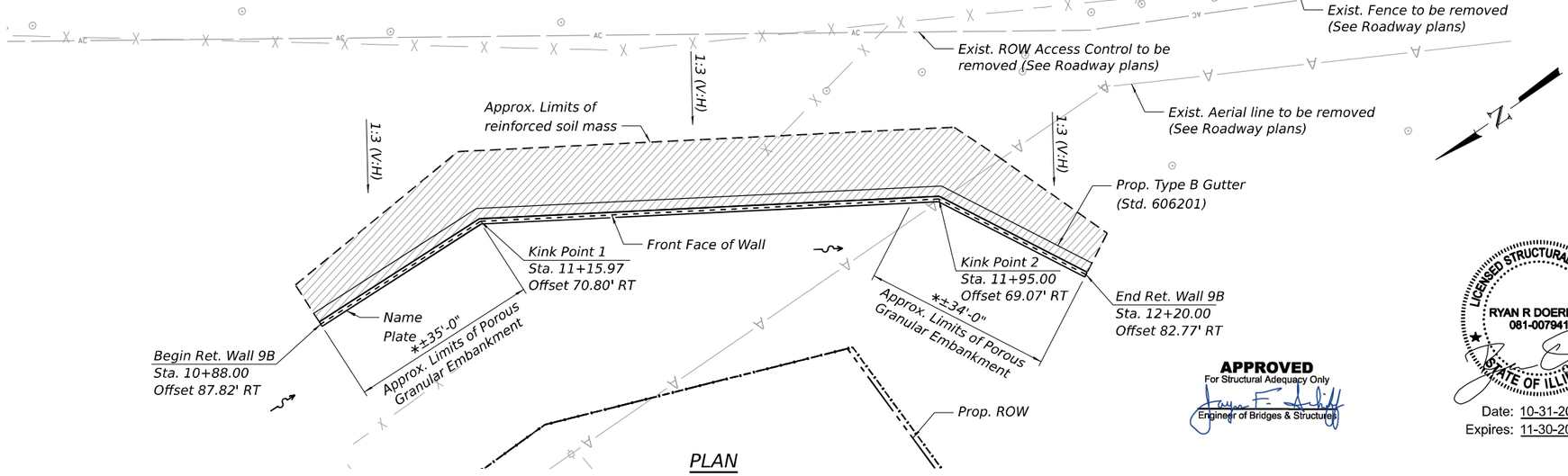

PLAN

LEGEND

- Soil Boring
- Prop. Underground Electric
- Exist. Underground Gasline
- Exist. Underground Waterline
- Exist. Underground Sanitary Sewer
- Exist. ROW Access Control
- Exist. ROW
- Prop. Storm Sewer
- Prop. Pipe Underdrain
- F.F. Front Face
- B.F. Back Face
- Proposed Ditch
- Approx. Limits of Reinforced Soil Mass
- Exist. Fence
- Existing Tree

Structure Location

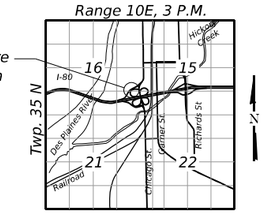

LOCATION SKETCH

APPROVED
For Structural Adequacy Only
Engineer of Bridges & Structures

LICENSED STRUCTURAL ENGINEER
RYAN R DOERRER
081-007941
STATE OF ILLINOIS

Date: 10-31-2025
Expires: 11-30-2026

GENERAL PLAN AND ELEVATION
RETAINING WALL 9B ALONG RAMP C
F.A.I. RTE. 80 - SEC. 2017-057F
WILL COUNTY
STA. 10+88.00 TO STA. 12+20.00
STRUCTURE NO. 099-W129

SEB
1111 BURLINGTON AVE., SUITE 111 - LISLE, IL 60532
(630) 641-9800

USER NAME = Jsandoval	DESIGNED - JSS	REVISED -	
	CHECKED - RRD	REVISED -	
PLOT SCALE = 0:1.9999 ':" / in.	DRAWN - TCK	REVISED -	
PLOT DATE = 10/28/2025	CHECKED - RRD	REVISED -	

STATE OF ILLINOIS
DEPARTMENT OF TRANSPORTATION

SHEET SJ-01 OF SJ-08 SHEETS

F.A.I. RTE.	SECTION	COUNTY	TOTAL SHEETS	SHEET NO.
80	2017-057F	WILL	1342	963
		CONTRACT NO. 62F94		
		ILLINOIS	FED. AID PROJECT	

MODEL: Default
FILE NAME: 099W129-62F94-SJ-01-GPE.dgn
10/28/2025 10:02:52 AM

GENERAL NOTES:

1. Reinforcement bars designated (E) shall be epoxy coated.
2. Cast-in-place concrete and reinforcement steel required for coping shall be included in the payment for Mechanical Stabilized Earth Retaining wall.
3. All Exposed concrete edges shall have a ¾" x 45° chamfer, except where shown otherwise. Chamfer on vertical edges shall be continued a minimum of one foot below the finished ground level
4. Protective Coat shall be applied to the exposed faces of the cast-in-place coping.
5. The Contractor shall field verify locations of existing underground utilities prior to beginning work. Existing utilities in conflict with retaining wall construction shall be abandoned or relocated according to the directions given on the Civil Plans. The Contractor shall take all necessary precautions to protect existing utilities to remain during all stages of construction. Any damage to the existing utillties to remain caused by the Contractor in the performance of the work shall be repaired by the Contractor, to the satisfaction of the Engineer, at no cost to the Department.
6. Stations and offsets are measured along the baseline of the Chicago Street Ramp C to the front face of precast panels.
7. Porous Granular Embankment shall be placed and compacted to a minimum of 95% of the maximum dry density in accordance with IDOT standard construction requirements at locations where the proposed theoretical top of leveling pad is above the existing ground line.

INDEX OF SHEETS

TOTAL BILL OF MATERIAL

ITEM	UNIT	TOTAL
Structure Excavation	Cu Yd	28
Protective Coat	Sq Yd	59
Name Plates	Each	1
Mechanically Stabilized Earth Retaining Wall	Sq Ft	1,415
Porous Granular Embankment	Cu Yd	104
Chain Link Fence, 4' Attached to Structure	Foot	141

SUGGESTED SEQUENCE OF CONSTRUCTION

1. Place Porous Granular Embankment in areas where the bottom of the proposed leveling pad is at a higher elevation than the existing ground.
2. Excavate existing ground where required and build MSE wall leveling pad.
3. Compact Porous Granular Embankment before placing MSE wall leveling pad.
4. Construct leveling pad and place MSE wall to the required elevation.
5. Construct cast in place concrete coping.
6. Grade remaining finish grade slope to meet proposed roadway.
7. Construct Ground Mounted Noise Abatement wall.

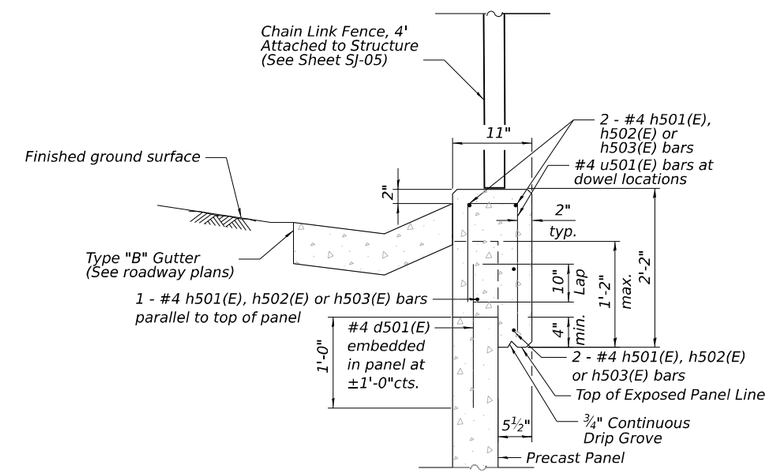

COPING DETAIL

PR RAMP C CURVE 1

P.I. Sta. = 9+40.44
Δ = 58°19'14" (LT)
D = 22°55'06"
R = 250.00'
T = 139.49'
L = 254.47'
E = 36.28'
e = 6.0%
P.C. Sta. = 8+00.95
P.T. Sta. = 10+55.42

PR RAMP C CURVE 2

P.I. Sta. = 14+34.93
Δ = 52°25'33" (RT)
D = 15°54'56"
R = 360.00'
T = 177.24'
L = 329.40'
E = 41.27'
e = 6.0%
P.C. Sta. = 12+57.68
P.T. Sta. = 15+87.08

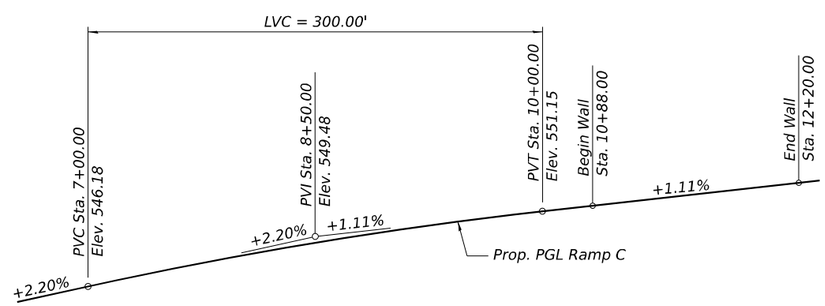

RAMP C PROFILE GRADE

(Along Prop. ℄ Ramp C)

STA. 10+88.00 TO 12+20.00
BUILT 20-- BY
STATE OF ILLINOIS
F.A.I. Rt. 80 Sec. 2017-057F
LOADING HL-93
STR. NO. 099-W129

NAME PLATE

See Std. 515001

MODEL: Default
FILE NAME: 099W129-62F94-SJ-02-GenNotesandBOM.dgn

SGD
1111 BURLINGTON AVE., SUITE 111 - LISLE, IL 60532
(630) 641-9800

USER NAME = jsandoval	DESIGNED - JSS	REVISED -	
	CHECKED - RRD	REVISED -	
PLOT SCALE = 0:1.9999 ':" / in.	DRAWN - TCK	REVISED -	
PLOT DATE = 10/28/2025	CHECKED - RRD	REVISED -	

STATE OF ILLINOIS
DEPARTMENT OF TRANSPORTATION

GENERAL DATA
STRUCTURE NO. 099-W129

SHEET SJ-02 OF SJ-08 SHEETS

F.A.I. RTE.	SECTION	COUNTY	TOTAL SHEETS	SHEET NO.
80	2017-057F	WILL	1342	964
		CONTRACT NO. 62F94		
		ILLINOIS	FED. AID PROJECT	

10/28/2025 10:03:07 AM

TABLE 1- WALL ELEVATIONS 9B

Station	Offset from ℄ Ramp C	A Top of C.I.P. Coping	B Top of Exposed Panel Line	C Finished Grade at F.F. of Wall	D Theoretical Top of Leveling Pad	E Exist. Grade at F.F. Wall
10+88.00	87.82' Rt.	531.16	528.99	531.16	527.66	524.78
11+10.00	74.43' Rt.	535.64	533.47	528.05	524.55	523.09
11+15.97	70.83' Rt.	536.90	534.73	527.20	523.70	522.89
11+20.00	70.72' Rt.	537.00	534.83	526.72	523.22	522.85
11+24.02	70.65' Rt.	537.09	534.92	526.23	522.73	522.81
11+50.00	70.05' Rt.	537.69	535.52	526.16	522.66	522.66
11+80.00	69.39' Rt.	538.38	536.21	526.07	522.57	522.58
11+84.37	69.29' Rt.	538.48	536.31	526.05	522.55	522.69
11+95.00	69.07' Rt.	538.73	536.56	528.39	524.89	522.78
12+10.00	77.27' Rt.	536.26	534.09	532.15	528.65	522.39
12+20.00	82.77' Rt.	534.66	532.49	534.66	531.16	522.42

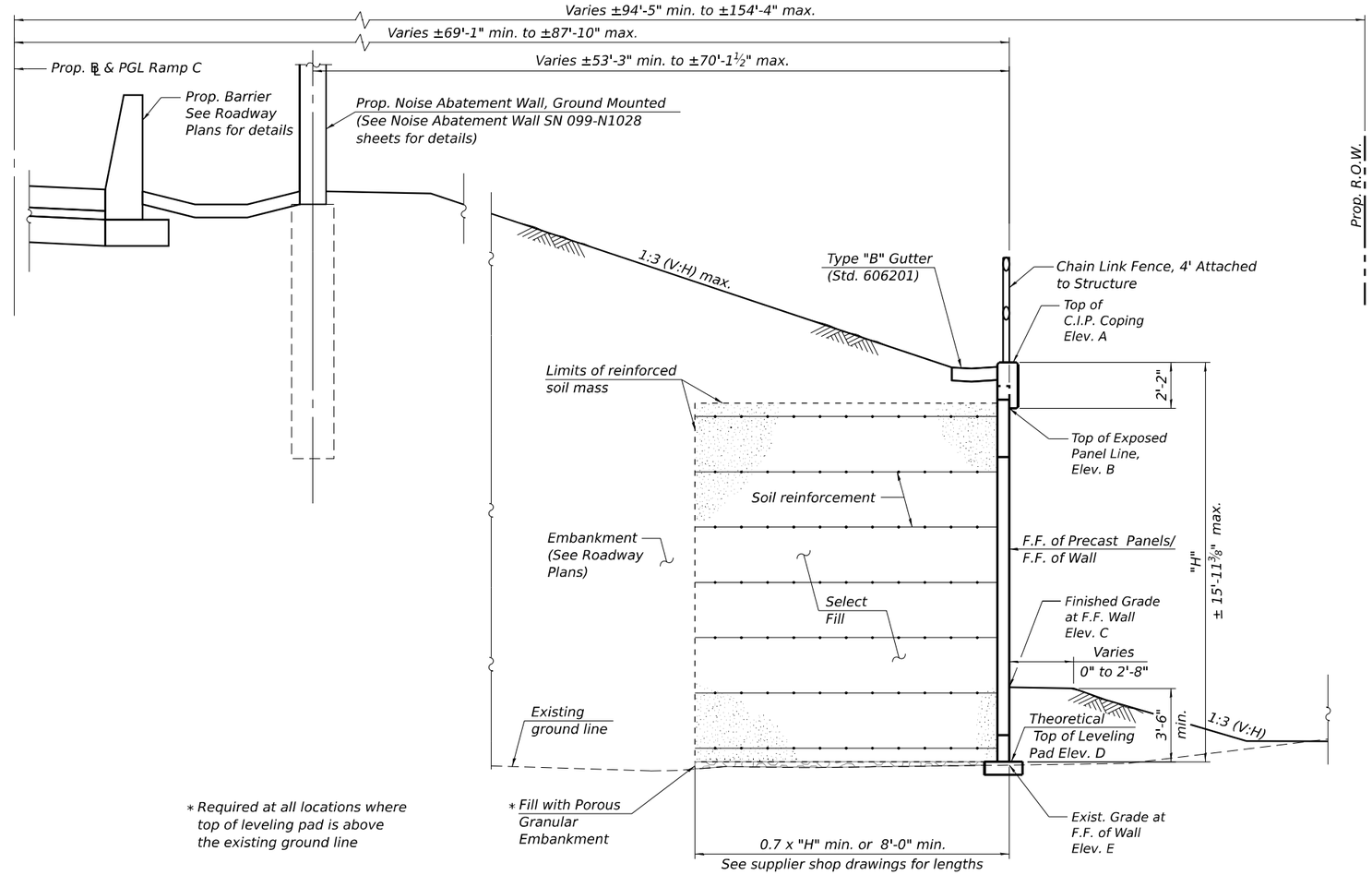

* Required at all locations where top of leveling pad is above the existing ground line

TYPICAL SECTION THRU MSE WALL

(Looking South)

MODEL: Default
FILE NAME: 099W129-62F94-SJ-03-Sec&Details.dgn

SEB
1111 BURLINGTON AVE., SUITE 111 - LISLE, IL 60532
(630) 641-9900

USER NAME = jsandoval	DESIGNED - JSS	REVISED -	
	CHECKED - RRD	REVISED -	
PLOT SCALE = 0:1.9999 ':" / in.	DRAWN - TCK	REVISED -	
PLOT DATE = 10/28/2025	CHECKED - RRD	REVISED -	

STATE OF ILLINOIS
DEPARTMENT OF TRANSPORTATION

TYPICAL SECTION
STRUCTURE NO. 099-W129

SHEET SJ-03 OF SJ-08 SHEETS

F.A.I. RTE.	SECTION	COUNTY	TOTAL SHEETS	SHEET NO.
80	2017-057F	WILL	1342	965
		CONTRACT NO. 62F94		
	ILLINOIS	FED. AID PROJECT		

10/28/2025 10:03:16 AM

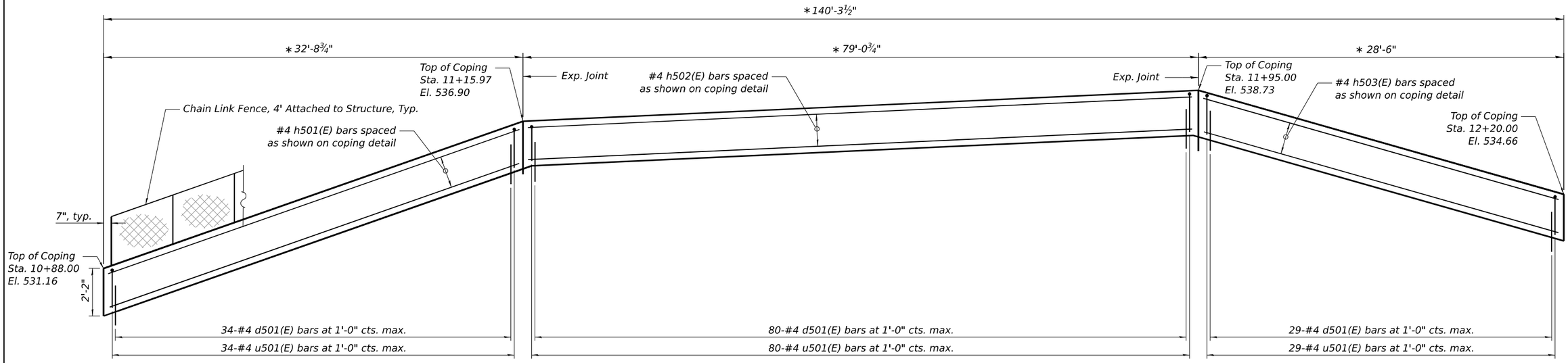

∗Measured along F.F. of Precast Panel

ELEVATION - UNFOLDED

(Looking North)

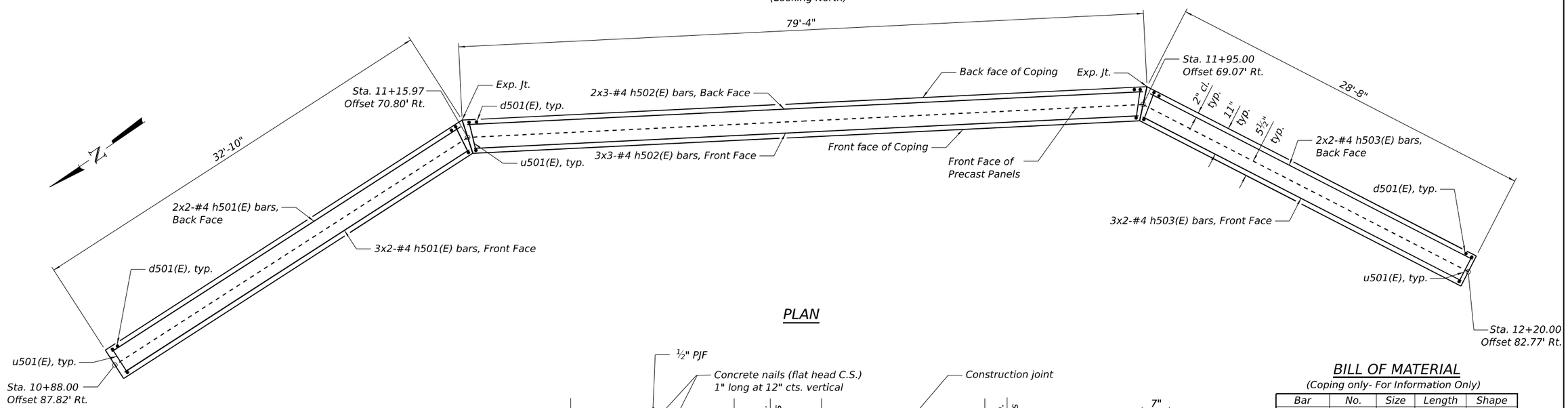

PLAN

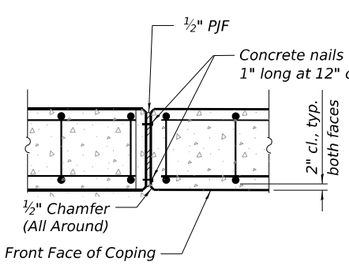

Coping Expansion Joint - PLAN

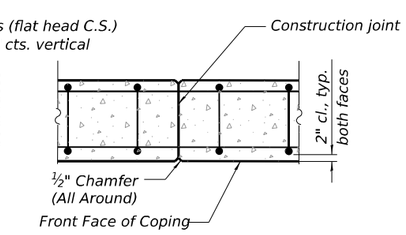

Coping Construction Joint - PLAN

(Provide construction joints at 30'-0" max. and 20'-0" min.)

MIN. LAP LENGTH

#4 Bar = 2'-11"

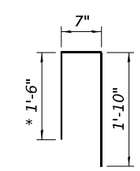

BAR u501(E)

∗ cut bar to fit

BILL OF MATERIAL

(Coping only- For Information Only)

Bar	No.	Size	Length	Shape
d501(E)	143	#4	2'-0"	———
h501(E)	10	#4	17'-11"	———
h502(E)	15	#4	28'-5"	———
h503(E)	10	#4	15'-10"	———
u501(E)	143	#4	3'-11"	⌐
Concrete Structures			Cu. Yd.	9.5
Reinforcement Bars, Epoxy Coated			Pound	1,080

NOTES:

1. Bars noted thus, 3x2-#5 indicates 3 lines of bars with 2 lengths of bar per line.
2. For control points stations, offset, elevations and Typical section, see Sheet SJ-03.
3. For coping detail, see Sheet SJ-02.
4. The cost of the concrete and the reinforcement steel required for the coping shall be included in the cost of Mechanically Stabilized Earth Retaining Wall.
5. For coping construction joint spacing requirements see Coping Construction Joint - Plan Detail.

MODEL: Default
FILE NAME: 099W129-62F94-SJ-04-Plan-Elev.dgn

SEA
1111 BURLINGTON AVE., SUITE 111 - LISLE, IL 60532
(630) 641-9900

USER NAME = jsandoval	DESIGNED - JSS	REVISED -	
	CHECKED - RRD	REVISED -	
PLOT SCALE = 0:1.9999 ':" / in.	DRAWN - TCK	REVISED -	
PLOT DATE = 10/28/2025	CHECKED - RRD	REVISED -	

STATE OF ILLINOIS
DEPARTMENT OF TRANSPORTATION

COPING PLAN AND ELEVATION
STRUCTURE NO. 099-W129

SHEET SJ-04 OF SJ-08 SHEETS

F.A.I. RTE.	SECTION	COUNTY	TOTAL SHEETS	SHEET NO.
80	2017-057F	WILL	1342	966
		CONTRACT NO. 62F94		
	ILLINOIS	FED. AID PROJECT		

10/28/2025 10:03:52 AM

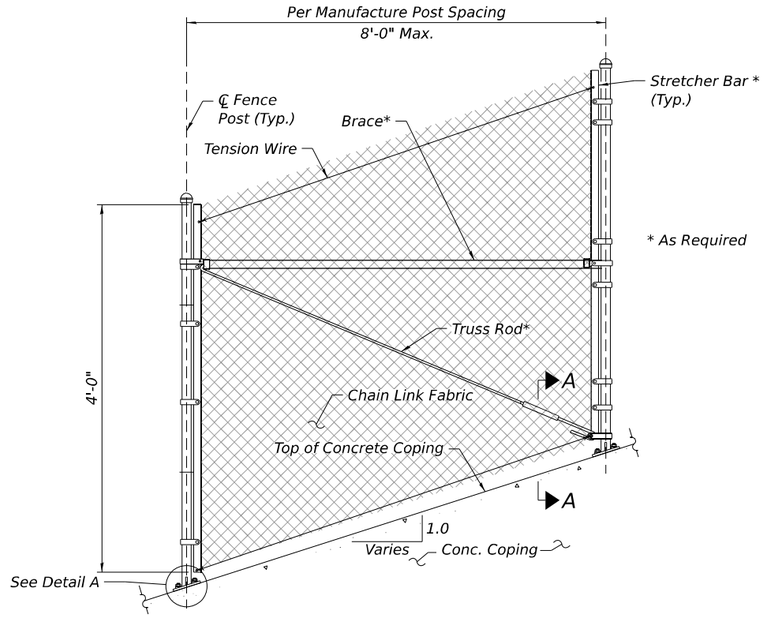

CHAIN LINK FENCE ELEVATION

(Along top of Concrete Coping)

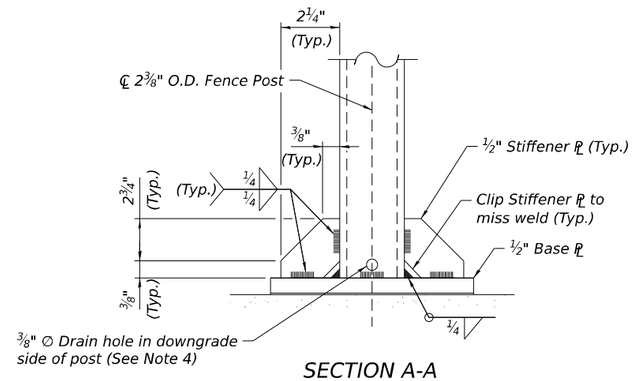

SECTION A-A

(Fence Post base plate connection)

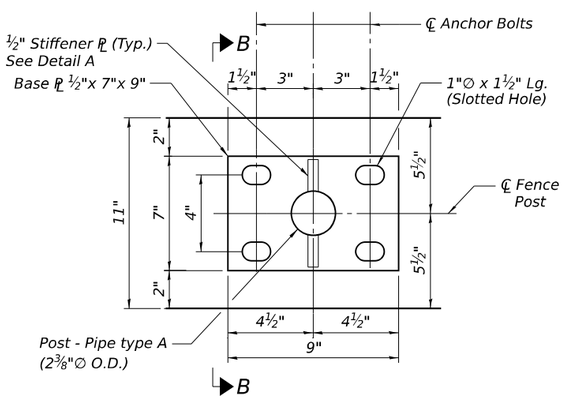

Base PL

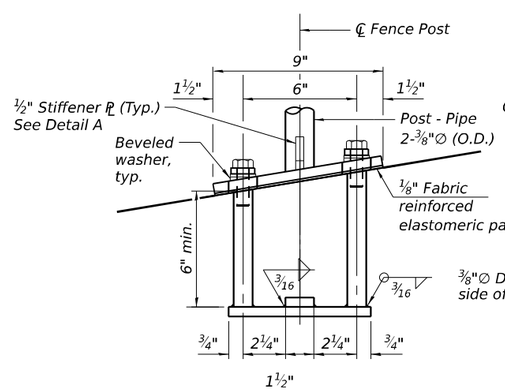

Detail A

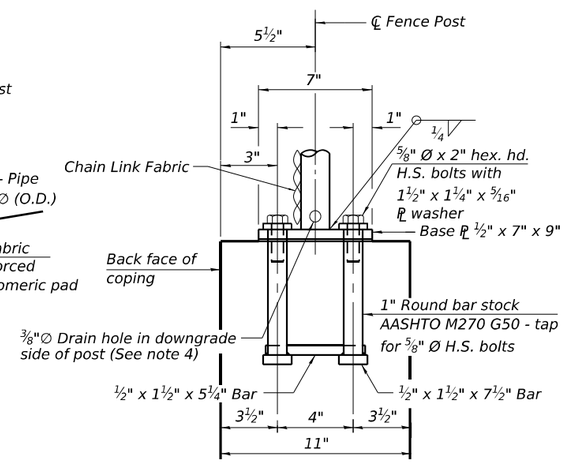

SECTION B-B

(Stiffener not shown for clarity)

NOTES:

1. See IDOT Highway Standard Drawing 664001-02 for additional fence details.
2. Fence shall be continuous over concrete coping expansion joints.
3. At all fence locations, the end posts shall be 7" from the the coping expansion joint and ends.
4. Drill Drain hole to miss fillet weld and prior to galvanizing. Hole shall be drilled as close to the weld as possible.
5. Edge distance from a construction or expansion joint in the proposed copings to an expansion anchor shall be per manufacturer's specifications.
6. For CIP Concrete coping details see sheet SJ-04.
7. Place reinforcement bars to miss anchor rod locations.
8. All heavy hex nuts shall be according to ASTM A 563 grade DH.
9. All fully threaded anchor rods shall be ASTM F1554 grade 105.
10. The post base plate shall be fastened to the top of the cast in place coping snug tight and given an additional ⅛" turn.

BASE PLATE NOTES:

A. Base Plates shall be fabricated from material meeting the requirements of AASHTO M270 Grade 50.

B. Base Plates and Posts shall be Hot Dipped Galvanized after fabrication in accordance with AASHTO M111.

C. All fabrication shall be per Article 505.04 of the Standard Specifications.

D. All bolts, nuts, washers and anchors shall be galvanized according to AASHTO M 232.

ANCHORAGE ASSEMBLY

In lieu of the cast-in-place anchor device shown, the Contractor has the option of drilling and setting ⅝" Ø fully threaded anchor rods with the same plate washers as specified above and heavy hex lock nuts according to Article 509.06 of the Standard Specifications. Embedment shall be according to the manufacturer's specifications.

BILL OF MATERIAL

Item	Unit	Quantity
Chain Link Fence, 4' Attached to Structure	Foot	141

MODEL: Default
FILE NAME: 099W129-62F94-SJ-05-Chain Link Fence.dgn

SEB
1111 BURLINGTON AVE., SUITE 111 - LISLE, IL 60532
(630) 641-9600

USER NAME = jsandoval	DESIGNED - JSS	REVISED -	
	CHECKED - RRD	REVISED -	
PLOT SCALE = 0:1.9999 ':" / in.	DRAWN - TCK	REVISED -	
PLOT DATE = 10/28/2025	CHECKED - RRD	REVISED -	

STATE OF ILLINOIS
DEPARTMENT OF TRANSPORTATION

CHAIN LINK FENCE ATTACHED TO STRUCTURE
STRUCTURE NO. 099-W129

SHEET SJ-05 OF SJ-08 SHEETS

F.A.I. RTE.	SECTION	COUNTY	TOTAL SHEETS	SHEET NO.
80	2017-057F	WILL	1342	967
		CONTRACT NO. 62F94		
		ILLINOIS	FED. AID PROJECT	

10/28/2025 10:04:03 AM

Illinois Department of Transportation
Division of Highways
GSG Consultants, Inc.

SOIL BORING LOG

Page 1 of 1

Date 6/22/22

ROUTE I-80 DESCRIPTION Retaining Wall No. 10 - Ramp C Sta 7+89 LOGGED BY DD

SECTION C-91-109-22 LOCATION , SEC. 16, TWP. 35 N, RNG. 10 E,
Latitude , Longitude

COUNTY Will DRILLING RIG CME-75 HAMMER TYPE Auto
DRILLING METHOD HSA HAMMER EFF (%) 91

STRUCT. NO.
Station

BORING NO. RWB-76
Station 10+58.1017
Offset 22.95ft LT
Ground Surface Elev. 547.81 ft

Surface Water Elev. N/A ft
Stream Bed Elev. N/A ft

Groundwater Elev.:
First Encounter Dry ft
Upon Completion N/A ft
After ___ Hrs. N/A ft

Description	Elev.	DEPTH (ft)	BLOWS (/6")	UCS Qu (tsf)	MOIST (%)
13 inches of Asphalt	546.73				
Brown, Moist FILL: SILTY CLAY			3		
			3 5	4.0 P	16
			1		
		-5	3 6	2.1 B	18
			1		
			4 5	1.0 B	18
			1		
	537.81	-10	4 7	1.9 B	18
Gray, Moist FILL: SILTY CLAY			2		
	535.31		4 9	1.3 B	18
Brown, Moist FILL: SILTY CLAY Cobbles at 13.5 feet			6		
		-15	9 11	1.9 B	17
Cobbles at 16 feet			2		
	530.31		6 31	3.3 B	19
Light Brown, Dry FILL: GRAVEL, with sand Cobbles at 18.5 feet			7		
		-20	10 8		4
Light Brown, Dry FILL: GRAVEL, with sand *(continued)* Cobbles at 20 feet	526.81		6		
Dense Brown, Dry SAND, with gravel (SPG)			27 11		4
			40		
		-25	25 13		3
Medium Dense to Very Dense Dark Brown and Brown, Moist SANDY LOAM, with gravel (SM)	521.81		10		
			13 9		9
			12		
		-30	9 12		11
			5		
Auger refusal at 32 feet End of Boring	515.81		10 50/2"		15
		-40			

The Unconfined Compressive Strength (UCS) Failure Mode is indicated by (B-Bulge, S-Shear, P-Penetrometer)
The SPT (N value) is the sum of the last two blow values in each sampling zone (AASHTO T206)

BBS, form 137 (Rev. 8-99)

Illinois Department of Transportation
Division of Highways
GSG Consultants, Inc.

SOIL BORING LOG

Page 1 of 1

Date 6/20/22

ROUTE I-80 DESCRIPTION Retaining Wall No. 10 - Ramp C Sta 7+89 LOGGED BY KA

SECTION C-91-109-22 LOCATION , SEC. 16, TWP. 35 N, RNG. 10 E,
Latitude , Longitude

COUNTY Will DRILLING RIG CME-75 HAMMER TYPE Auto
DRILLING METHOD HSA HAMMER EFF (%) 91

STRUCT. NO.
Station

BORING NO. RWB-77
Station 11+30.1683
Offset 22.17ft LT
Ground Surface Elev. 547.50 ft

Surface Water Elev. N/A ft
Stream Bed Elev. N/A ft

Groundwater Elev.:
First Encounter Dry ft
Upon Completion N/A ft
After ___ Hrs. N/A ft

Description	Elev.	DEPTH (ft)	BLOWS (/6")	UCS Qu (tsf)	MOIST (%)
13 inches of Asphalt	546.42				
Brown, Moist to Very Moist FILL: SILTY CLAY, trace sand and gravel			16		
			5 7	4.5 P	16
			6		
		-5	5 6	5.2 S	17
			4		
			4 6	4.5 P	18
			4		
		-10	6 5	5.0 S	20
			7		
			9 11	5.4 B	17
			4		
		-15	4 8	4.5 P	27
			5		
			5 11	4.5 P	18
	529.00				
Light Brown, Dry FILL: GRAVEL, with sand			17		
		-20	37 15		3
Light Brown, Dry FILL: GRAVEL, with sand *(continued)*	526.50		13		
Loose to Medium Dense Light Brown and Gray, Dry SAND, with gravel (SPG) Cobbles at 21 feet			18 9		3
			17		
		-25	7 3		3
Very Dense Dark Brown, Moist SANDY LOAM, with gravel (SM)	521.50		6		
			9 50/3"		13
	519.00		4		
Very Dense Brown, Moist SAND, with gravel, trace clay and cobbles (SPG) Auger refusal at 30 feet			11 45		10
Light Gray LIMESTONE, moderately weathered, moderately fractured Run 1: 30' - 40' Recovery: 80.8% RQD: 44.2% (Poor)	517.50	-30			
		-35			
	507.50	-40			
End of Boring					

The Unconfined Compressive Strength (UCS) Failure Mode is indicated by (B-Bulge, S-Shear, P-Penetrometer)
The SPT (N value) is the sum of the last two blow values in each sampling zone (AASHTO T206)

BBS, form 137 (Rev. 8-99)

MODEL: Default
FILE NAME: 099W129-62F94-SJ-06-Boring Log 1.dgn

SEB
1111 BURLINGTON AVE., SUITE 111 - LISLE, IL 60532
(630) 641-9800

USER NAME = jsandoval	DESIGNED - JSS	REVISED -	
	CHECKED - RRD	REVISED -	
PLOT SCALE = 0:1.9999 ':" / in.	DRAWN - TCK	REVISED -	
PLOT DATE = 10/28/2025	CHECKED - RRD	REVISED -	

STATE OF ILLINOIS
DEPARTMENT OF TRANSPORTATION

BORING LOGS 1 (1 of 3)
STRUCTURE NO. 099-W129

SHEET SJ-06 OF SJ-08 SHEETS

F.A.I. RTE.	SECTION	COUNTY	TOTAL SHEETS	SHEET NO.
80	2017-057F	WILL	1342	968
		CONTRACT NO. 62F94		
		ILLINOIS	FED. AID PROJECT	

10/28/2025 10:04:18 AM

Placeholder for table

RWB-104

Placeholder for table

RWB-105

MODEL: Default
FILE NAME: 099W129-62F94-SJ-07-Boring Log 2.dgn

SEB
1111 BURLINGTON AVE., SUITE 111 - LISLE, IL 60532
(630) 641-9900

USER NAME = jsandoval	DESIGNED - JSS	REVISED -	
	CHECKED - RRD	REVISED -	
PLOT SCALE = 0:1.9999 ':" / in.	DRAWN - TCK	REVISED -	
PLOT DATE = 10/28/2025	CHECKED - RRD	REVISED -	

STATE OF ILLINOIS
DEPARTMENT OF TRANSPORTATION

BORING LOGS 2 (2 of 3)
STRUCTURE NO. 099-W129

SHEET SJ-07 OF SJ-08 SHEETS

F.A.I. RTE.	SECTION	COUNTY	TOTAL SHEETS	SHEET NO.
80	2017-057F	WILL	1342	969
		CONTRACT NO. 62F94		
	ILLINOIS	FED. AID PROJECT		

10/28/2025 10:04:38 AM

Placeholder for table

RWB-106

Placeholder for table

RWB-107

MODEL: Default
FILE NAME: 099W129-62F94-SJ-08-Boring Log 3.dgn

SEB
1111 BURLINGTON AVE., SUITE 111 - LISLE, IL 60532
(630) 641-9900

USER NAME = jsandoval	DESIGNED - JSS	REVISED -	
	CHECKED - RRD	REVISED -	
PLOT SCALE = 0:1.9999 ':" / in.	DRAWN - TCK	REVISED -	
PLOT DATE = 10/28/2025	CHECKED - RRD	REVISED -	

STATE OF ILLINOIS
DEPARTMENT OF TRANSPORTATION

BORING LOGS 3 (3 of 3)
STRUCTURE NO. 099-W129

SHEET SJ-08 OF SJ-08 SHEETS

F.A.I. RTE.	SECTION	COUNTY	TOTAL SHEETS	SHEET NO.
80	2017-057F	WILL	1342	970
		CONTRACT NO. 62F94		
	ILLINOIS	FED. AID PROJECT		

10/28/2025 10:04:47 AM

Benchmark: Chiseled X Sta. 710+18.42, 1,729.75' LT
N 1,766,568.213 and E 1,053,232.101
Elev.= 527.785

Existing Structures: None.

Traffic Control: Traffic will be detoured during construction.

Salvage: None.

DESIGN SPECIFICATIONS

2020 AASHTO LRFD Bridge Design Specifications, 9th Edition

DESIGN STRESSES

FIELD UNITS

f'c = 3,500 psi
fy = 60,000 psi (Reinforcement)

INDEX OF SHEETS

NOTES:

1. Stations and offsets are measured from the ℄ Chicago Street to the front face of precast panels.
2. For General Notes, Index of Sheets, Profile Grade, Curve Data and Total Bill of Material, see Sheet SK-02.
3. The Contractor shall exercise extreme caution during wall construction to make certain that the construction activities will not have detrimental effects on the adjacent utilities and other facilities.

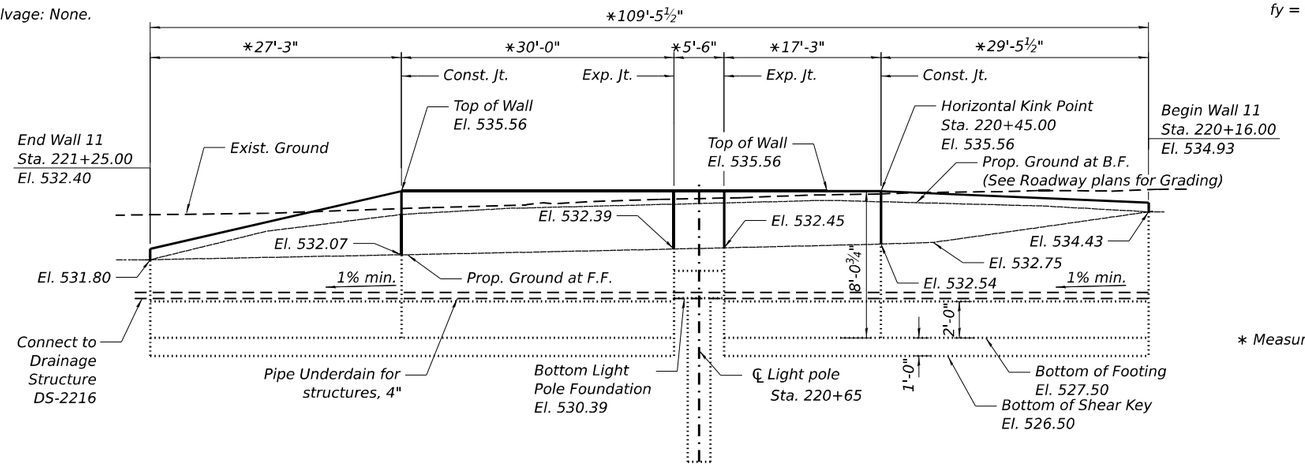

∗ Measured along F.F. of Wall

ELEVATION

(Looking at Front Face of Wall)

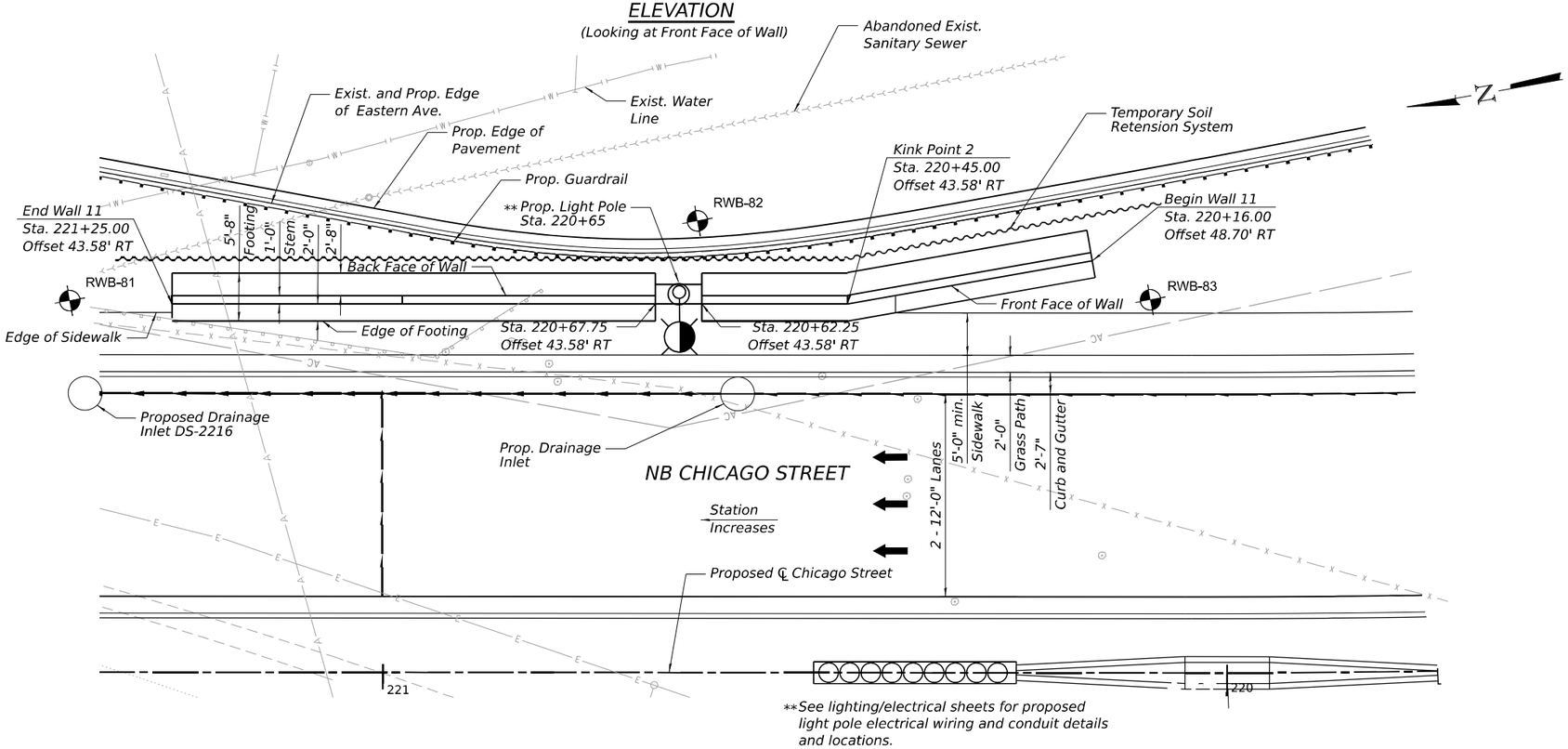

∗∗See lighting/electrical sheets for proposed light pole electrical wiring and conduit details and locations.

PLAN

LEGEND

	Temporary Soil Retention System
	Soil Boring
E — E	Exist. Underground Electric
G — G	Exist. Underground Gasline
W — W	Exist. Underground Waterline
	Exist. Underground Sanitary Sewer
AC — AC	Exist. ROW Access Control
x — x — x	Exist. Fence
	Exist Guardrail
	Prop. Pipe Underdrain
	Prop. Storm Sewer
	Prop. Underground Electric
F.F.	Front Face
B.F.	Back Face
El.	Elevation
Const.	Construction joint
Exp.	Expansion joint

LICENSED STRUCTURAL ENGINEER
RYAN R DOERRER
081-007941
STATE OF ILLINOIS

Date: 10-31-2025
Expires: 11-30-2026

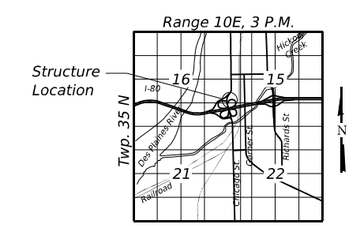

LOCATION SKETCH

GENERAL PLAN AND ELEVATION
RETAINING WALL 11 ALONG CHICAGO STREET
F.A.I. RTE. 80 - SEC. 2017-057F
WILL COUNTY
STA. 220+16.00 TO STA. 221+25.00
STRUCTURE NO. 099-W040

MODEL: Default
FILE NAME: 0099W040-62F94-SK-01-GPE.dgn

SEB
1111 BURLINGTON AVE., SUITE 111 - LISLE, IL 60532
(630) 641-8800

USER NAME = jsandoval	DESIGNED - JSS	REVISED -	
	CHECKED - RRD	REVISED -	
PLOT SCALE = 0:1.9999 ':" / in.	DRAWN - TCK	REVISED -	
PLOT DATE = 10/28/2025	CHECKED - RRD	REVISED -	

STATE OF ILLINOIS
DEPARTMENT OF TRANSPORTATION

SHEET SK-01 OF SK-07 SHEETS

F.A.I. RTE.	SECTION	COUNTY	TOTAL SHEETS	SHEET NO.
80	2017-057F	WILL	1342	971
		CONTRACT NO. 62F94		
		ILLINOIS	FED. AID PROJECT	

10/28/2025 10:05:30 AM

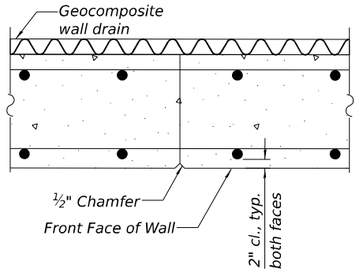

CONSTRUCTION JOINT

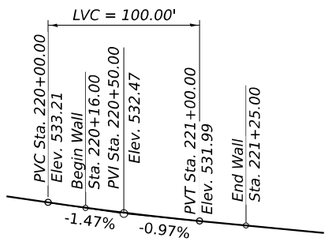

PROFILE GRADE

(Along Prop. NB PGL Chicago St.)

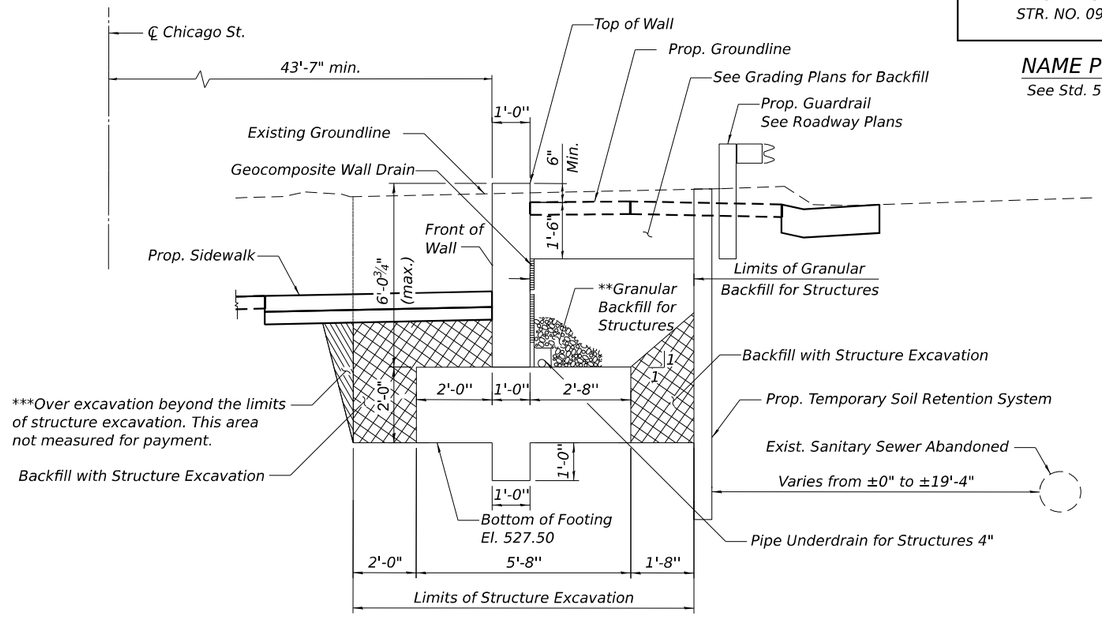

TYPICAL SECTION

***Backfill remainder of structure excavation and over excavation with same material specified for roadway embankment.

**Excavation for Granular Backfill for Structures paid for as Structure Excavation

STA. 220+16.00 TO 221+25.00
BUILT 20-- BY
STATE OF ILLINOIS
F.A.I. Rt. 80 Sec. 2017-057F
LOADING HL-93
STR. NO. 099-W040

NAME PLATE

See Std. 515001

TOTAL BILL OF MATERIAL

ITEM	UNIT	TOTAL
Structure Excavation	Cu. Yd.	246
Reinforcement Bars, Epoxy Coated	Pound	5,120
Name Plates	Each	1
Temporarary Soil Retention System	Sq. Yd.	870
Concrete Structures (Retaining Wall)	Cu. Yd.	68.9
Granular Backfill for Structures	Cu. Yd.	55
Concrete Sealer	Sq. Ft.	495
Geocomposite Wall Drain	Sq. Yd.	45
Pipe Underdrains for Structures 4"	Foot	140
Light pole Foundation, 30" Diameter	Foot	15

GENERAL NOTES:

1. Reinforcement bars designated (E) shall be epoxy coated.
2. Concrete sealer shall be applied to exposed surfaces of the new wall.
3. The Contractor shall field-verify locations of existing underground utilities prior to beginning work. Existing utilities in conflict with retaining wall construction shall be abandoned or relocated according to directions given on the Civil Plans. The Contractor shall take all necessary precautions to protect existing utilities to remain during all stages of construction. Any damage to existing utilities to remain caused by the Contractor in the performance of the work shall be repaired by the Contractor, to the satisfaction of the Engineer, at no cost to the Department.
4. The Pipe Underdrains for Structures, 4" shall be sloped to drain towards Drainage Structure 2216. A non-perforated pipe per section 601 of the IDOT Standard Specifications shall be used to connect the Pipe Underdrain for Structure to Drainage Structure 2216. Cost included in Pipe Underdrains for Structures, 4".

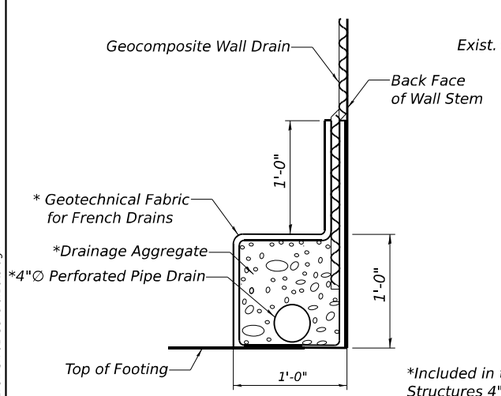

PIPE UNDERDRAIN DETAIL

*Included in the cost of Pipe Underdrains for Structures 4". Pipe Underdrains shall tie into drainage structure number 2216. The drain pipe will outlet at approximately Sta. 221+50. See General Note 4.

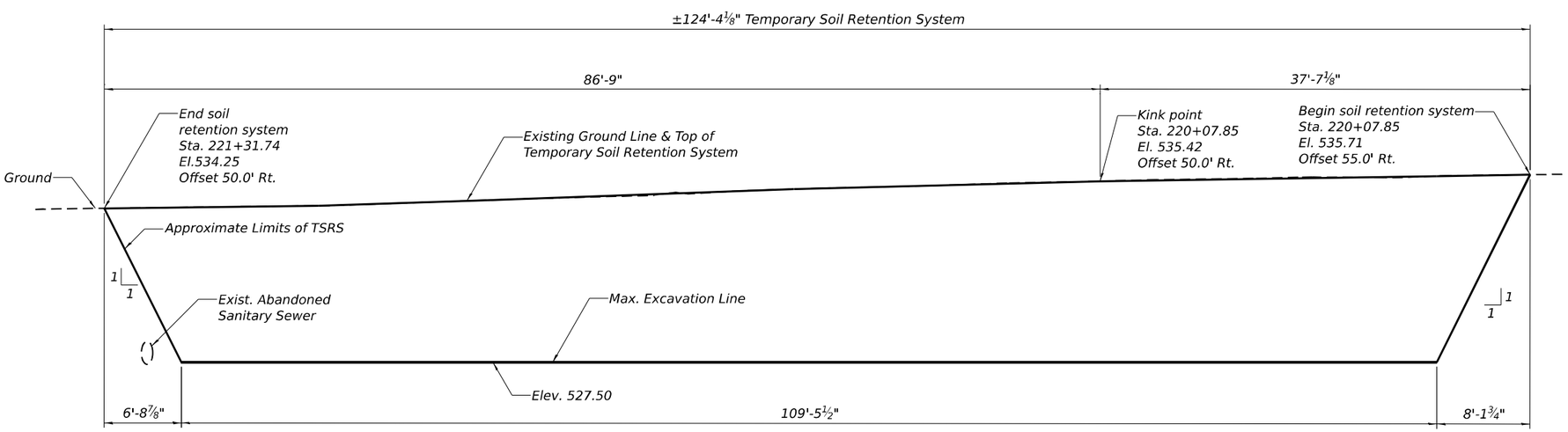

TEMPORARY SOIL RETENTION SYSTEM ELEVATION

(Looking East)

MODEL: Default
FILE NAME: 099W040-62F94-SK-02-GeneralData.dgn

SEB
1111 BURLINGTON AVE., SUITE 111 - LISLE, IL 60532
(630) 641-9900

USER NAME = jsandoval	DESIGNED - JSS	REVISED -	
	CHECKED - RRD	REVISED -	
PLOT SCALE = 0.167 ' / in.	DRAWN - TCK	REVISED -	
PLOT DATE = 10/28/2025	CHECKED - RRD	REVISED -	

10/28/2025 10:05:52 AM

STATE OF ILLINOIS
DEPARTMENT OF TRANSPORTATION

GENERAL DATA
STRUCTURE NO. 099-W040

SHEET SK-02 OF SK-07 SHEETS

F.A.I. RTE.	SECTION	COUNTY	TOTAL SHEETS	SHEET NO.
80	2017-057F	WILL	1342	972
		CONTRACT NO. 62F94		
	ILLINOIS	FED. AID PROJECT		

BILL OF MATERIAL

Bar	No.	Size	Length	Shape
h601(E)	12	#4	29'-1"	
h602(E)	12	#4	20'-5"	
h603(E)	12	#4	29'-8"	
h604(E)	12	#4	30'-5"	
n601(E)	111	#5	8'-2"	
s601(E)	109	#4	4'-4"	
t601(E)	218	#5	5'-4"	
v601(E)	76	#4	5'-8"	
w601(E)	20	#4	29'-6"	
w602(E)	20	#4	20'-5"	
w603(E)	40	#4	30'-3"	
Concrete Structures (Retaining Wall)			Cu. Yd.	68.9
Reinforcement Bars, Epoxy Coated			Pound	5,120

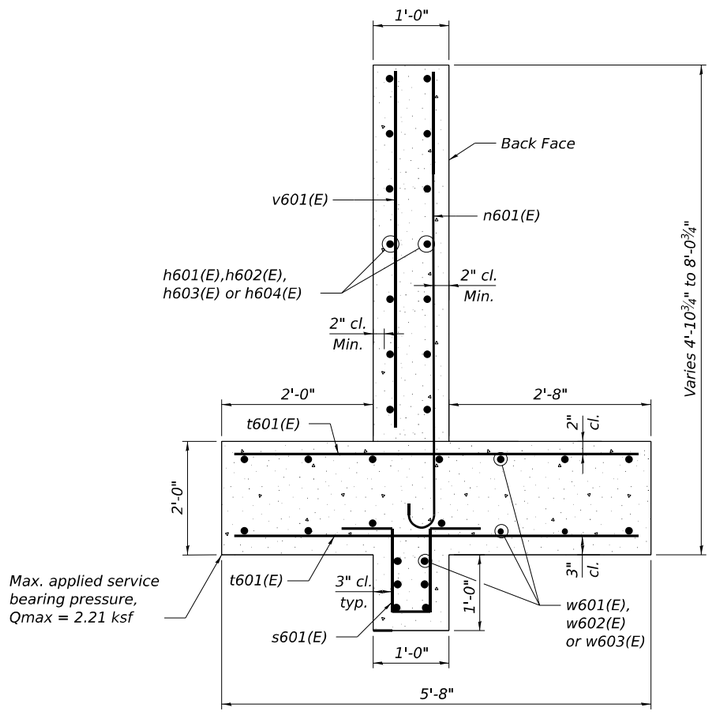

SECTION THRU WALL

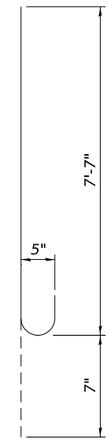

Bar n601(E)

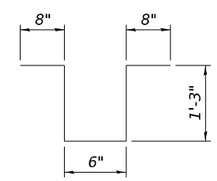

Bar s601(E)

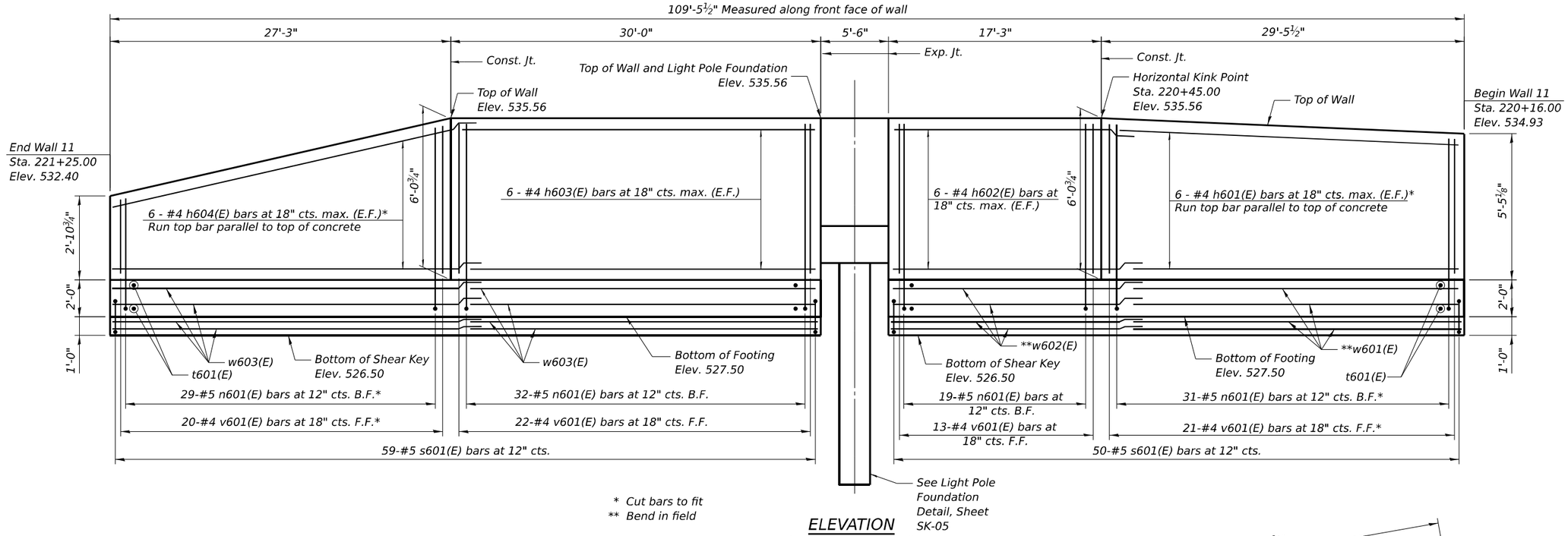

* Cut bars to fit
** Bend in field

ELEVATION
(Looking at F.F. of Wall)

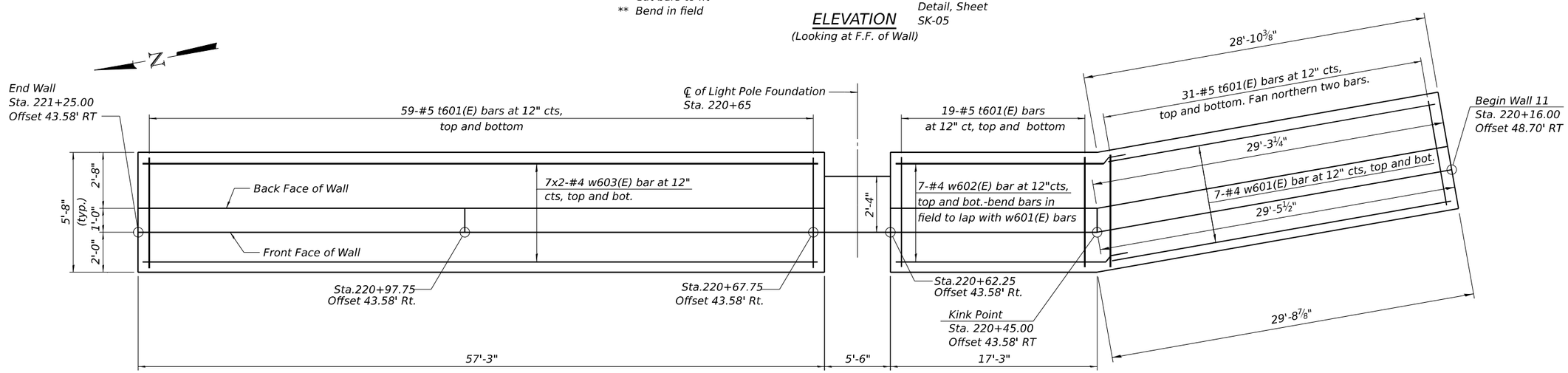

PLAN
(Stem and Shear Key Reinforcement not shown for clarity)

NOTES:

1. Stations and offsets are measured from the ℄ Chicago Street to the front face of wall.
2. For Section thru wall, see Sheet SK-03.
3. For Bill of Material and bar bend diagrams, see Sheet SK-03.
4. Bars indicated thus 7x2-#4 etc. indicates 7 lines of bars with 2 lengths per line.

MIN. BAR LAPS
#4 bar = 3'-2"

MODEL: Default
FILE NAME: 099W040-62F94-SK-04-Plan-Elev.dgn

SGS
1111 BURLINGTON AVE., SUITE 111 - LISLE, IL 60532
(630) 641-9800

USER NAME = jsandoval	DESIGNED - JSS	REVISED -	
	CHECKED - RRD	REVISED -	
PLOT SCALE = 0:1.9999 ':" / in.	DRAWN - TCK	REVISED -	
PLOT DATE = 10/28/2025	CHECKED - RRD	REVISED -	

STATE OF ILLINOIS
DEPARTMENT OF TRANSPORTATION

PLAN AND ELEVATION
STRUCTURE NO. 099-W040

SHEET SK-04 OF SK-07 SHEETS

F.A.I. RTE.	SECTION	COUNTY	TOTAL SHEETS	SHEET NO.
80	2017-057F	WILL	1342	974
		CONTRACT NO. 62F94		
		ILLINOIS	FED. AID PROJECT	

10/28/2025 10:06:30 AM

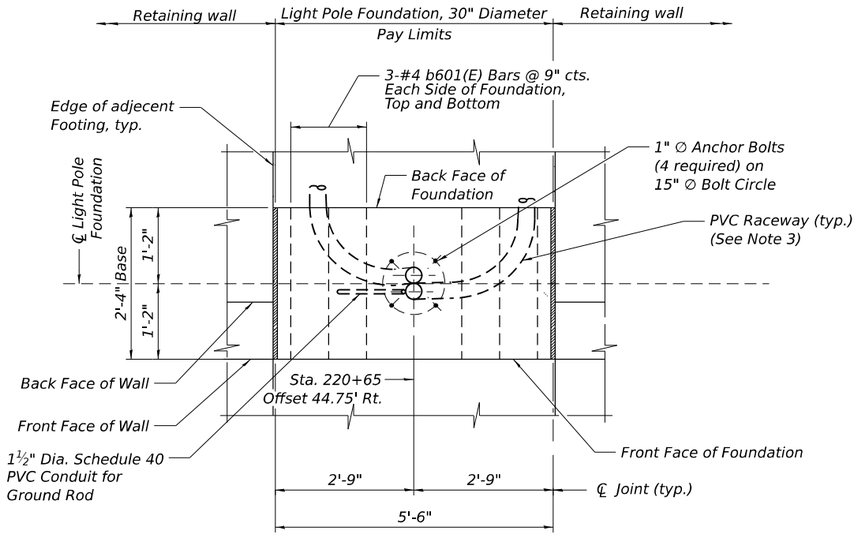

PLAN VIEW

NOTES:

1. All Bars Shall Be Epoxy Coated.
2. Concrete, Reinforcement Bars, Anchor Bolts, Hardware, Embedded Conduit, Expansion Joints and all Other Components of the Light Pole Foundation are included in the cost of Light Pole Foundation, 30" Diameter.
3. See lighting/electrical sheets for proposed light pole electrical wiring, PVC raceway, conduit details and locations. PVC raceway shown on this sheet is for information only.
4. Any aperture required in the Geocomposite Wall Drain to accommodate the PVC raceway will be installed per manufacturer's requirements. Cost included in Geocomposite Wall Drain.

BILL OF BARS

Bar	No.	Size	Length	Shape
a601(E)	14	#4	5'-2"	
b601(E)	12	#4	2'-0"	
d601(E)	12	#5	7'-0"	
sp601(E)	*	#4	*	
v602(E)	8	#8	13'-6"	

* see Section A-A

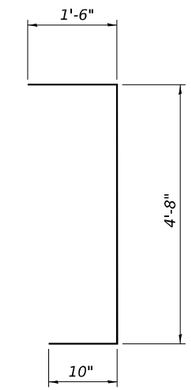

d601(E) BAR

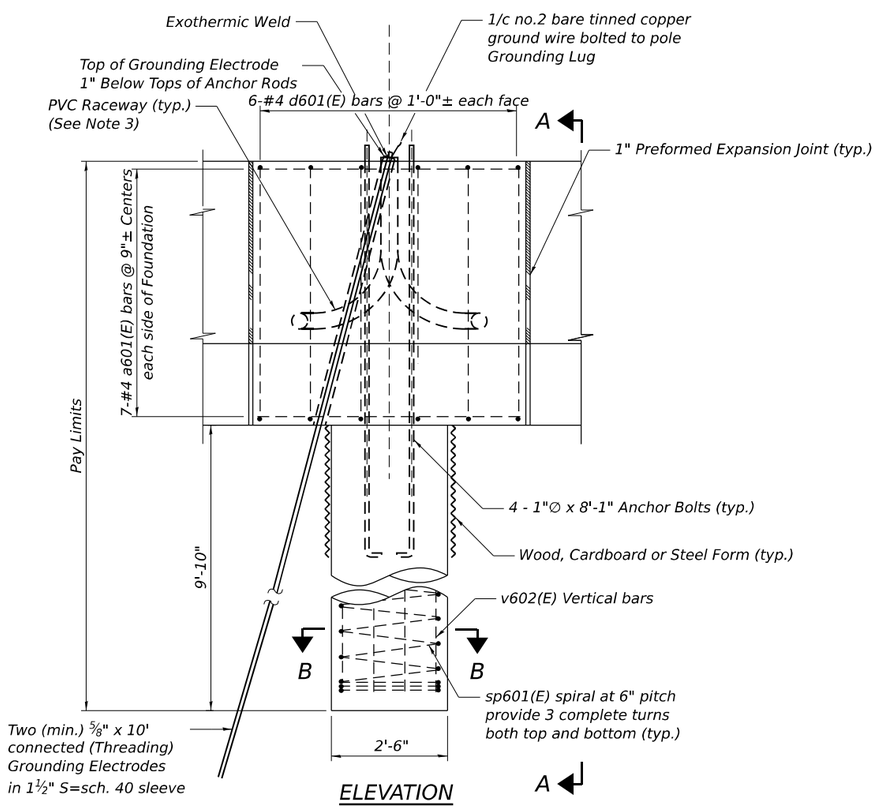

ELEVATION

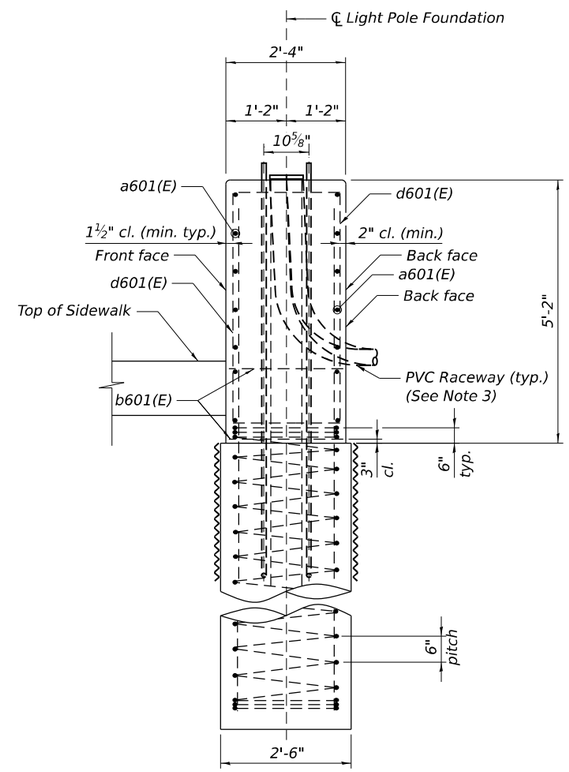

SECTION A-A

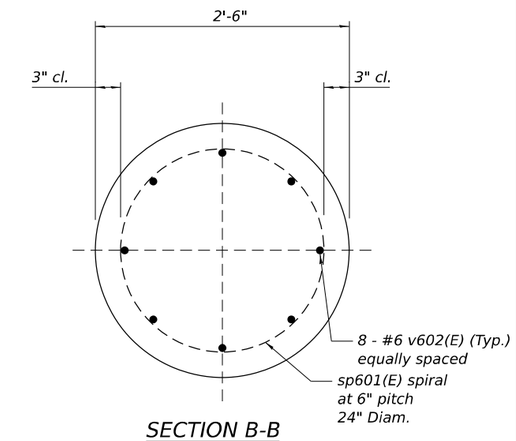

SECTION B-B

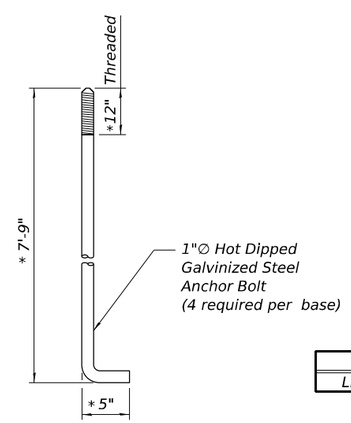

ANCHOR BOLT DETAIL

* Verify dimensions of anchor rods with light pole manufacturer before ordering anchor bolts.

BILL OF MATERIAL

Item	Unit	Quantity
Light Pole Foundation, 30" Diameter	Foot	15

MODEL: Default
FILE NAME: 099W040-62F94-SK-05-Lightpole-Plan-Elev.dgn

SEB
1111 BURLINGTON AVE., SUITE 111 - LISLE, IL 60532
(630) 641-9800

USER NAME = jsandoval	DESIGNED - JSS	REVISED -	
	CHECKED - RRD	REVISED -	
PLOT SCALE = 0:1.9999 ':" / in.	DRAWN - TCK	REVISED -	
PLOT DATE = 10/30/2025	CHECKED - RRD	REVISED -	

STATE OF ILLINOIS
DEPARTMENT OF TRANSPORTATION

LIGHT POLE PLAN AND ELEVATION
STRUCTURE NO. 099-W040

SHEET SK-05 OF SK-07 SHEETS

F.A.I. RTE.	SECTION	COUNTY	TOTAL SHEETS	SHEET NO.
80	2017-057F	WILL	1342	975

CONTRACT NO. 62F94

ILLINOIS | FED. AID PROJECT

10/30/2025 1:28:24 PM

Illinois Department of Transportation
Division of Highways
GSG Consultants, Inc.

SOIL BORING LOG

Page 1 of 1

Date 6/2/22

ROUTE I-80 DESCRIPTION Retaining Wall No. 11 - Chicago Street LOGGED BY KA

SECTION C-91-109-22 LOCATION , SEC. 15, TWP. 35 N, RNG. 10 E,
Latitude , Longitude

COUNTY Will DRILLING RIG CME-75 HAMMER TYPE Auto
DRILLING METHOD HSA HAMMER EFF (%) 91

STRUCT. NO.
Station

BORING NO. RWB-81
Station 221+59.3113
Offset 22.46ft RT
Ground Surface Elev. 533.27 ft

Surface Water Elev. N/A ft
Stream Bed Elev. N/A ft

Groundwater Elev.:
First Encounter 519.3 ft ▼
Upon Completion N/A ft
After ___ Hrs. N/A ft

Description	Elev.	DEPTH (ft)	BLOWS (/6")	UCS Qu (tsf)	MOIST (%)
3 inches of Asphalt	533.02				
Medium Dense to Extremely Dense Light Brown, Dry to Moist SAND, with gravel (SPG) Cobbles from 2 to 12 feet			6		
			33 50/2"		5
			10		
			14 8		6
		-5			
			5		
			11 12		6
			3		
			15 16		8
		-10			
			10		
			22 23		6
	520.77				
Very Dense Gray, Moist SAND, with gravel (SPG)			50/1"		
					14
		-15			
			22		
Cobbles at 16.5 feet			15 50/6"		14
	515.77				
Very Dense Gray, Moist GRAVEL (GP) Cobbles at 18.5 feet			15		
			50/6"		12
	513.27	-20			

End of Boring

The Unconfined Compressive Strength (UCS) Failure Mode is indicated by (B-Bulge, S-Shear, P-Penetrometer)
The SPT (N value) is the sum of the last two blow values in each sampling zone (AASHTO T206)

BBS, form 137 (Rev. 8-99)

Illinois Department of Transportation
Division of Highways
GSG Consultants, Inc.

SOIL BORING LOG

Page 1 of 1

Date 6/2/22

ROUTE I-80 DESCRIPTION Retaining Wall No. 11 - Chicago Street LOGGED BY KA

SECTION C-91-109-22 LOCATION , SEC. 15, TWP. 35 N, RNG. 10 E,
Latitude , Longitude

COUNTY Will DRILLING RIG CME-75 HAMMER TYPE Auto
DRILLING METHOD HSA HAMMER EFF (%) 91

STRUCT. NO.
Station

BORING NO. RWB-82
Station 220+62.7734
Offset 53.47ft RT
Ground Surface Elev. 534.95 ft

Surface Water Elev. N/A ft
Stream Bed Elev. N/A ft

Groundwater Elev.:
First Encounter 518.5 ft ▼
Upon Completion N/A ft
After ___ Hrs. N/A ft

Description	Elev.	DEPTH (ft)	BLOWS (/6")	UCS Qu (tsf)	MOIST (%)
4 inches of Asphalt	534.62				
Medium Dense to Extremely Dense Light Brown, Dry to Moist SAND, with gravel (SPG)			5		
			17 14		6
Cobbles from 2.5 to 12.5 feet					
			13		
			33 21		4
		-5			
			7		
			14 7		4
			10		
			11 13		6
		-10			
			6		
			7 12		3
			3		
			19 30		12
		-15			
Cobbles at 16 feet			7		
			37 50/2"		7
	517.45				
Very Dense Brown, Moist SAND, with gravel (SPG)	516.45		11		
			45 14		12
		-20			
Light Gray LIMESTONE, moderately fractured, moderately weathered, some verticle fractures					
Run 1: 18.5 - 28.5' Recovery: 75% RQD: 35% (Fair)					
Black boulder from 18.5 to 19 feet Cobbles from 19 to 20.5 feet *(continued)*		-25			
	506.45				
End of Boring					
		-30			
		-35			
		-40			

The Unconfined Compressive Strength (UCS) Failure Mode is indicated by (B-Bulge, S-Shear, P-Penetrometer)
The SPT (N value) is the sum of the last two blow values in each sampling zone (AASHTO T206)

BBS, form 137 (Rev. 8-99)

MODEL: Default
FILE NAME: 099W040-62F94-SK-06-BoringLog1.dgn

SEB
1111 BURLINGTON AVE., SUITE 111 - LISLE, IL 60532
(630) 641-9800

USER NAME = jsandoval	DESIGNED - JSS	REVISED -	
	CHECKED - RRD	REVISED -	
PLOT SCALE = 0.167 ' / in.	DRAWN - TCK	REVISED -	
PLOT DATE = 10/28/2025	CHECKED - RRD	REVISED -	

STATE OF ILLINOIS
DEPARTMENT OF TRANSPORTATION

BORING LOGS (SHEET 1 OF 2)
STRUCTURE NO. 099-W040

SHEET SK-06 OF SK-07 SHEETS

F.A.I. RTE.	SECTION	COUNTY	TOTAL SHEETS	SHEET NO.
80	2017-057F	WILL	1342	976
		CONTRACT NO. 62F94		
		ILLINOIS	FED. AID PROJECT	

10/28/2025 10:06:49 AM

Illinois Department of Transportation
Division of Highways
GSG Consultants, Inc.

SOIL BORING LOG

Date 6/1/22

ROUTE I-80 DESCRIPTION Retaining Wall No. 11 - Chicago Street LOGGED BY KA

SECTION C-91-109-22 LOCATION SEC. 15, TWP. 35 N, RNG. 10 E, Latitude , Longitude

COUNTY Will DRILLING RIG CME-75 HAMMER TYPE Auto

DRILLING METHOD HSA HAMMER EFF (%) 91

STRUCT. NO.
Station

BORING NO. RWB-83
Station 220+9.1203
Offset 44.17ft RT
Ground Surface Elev. 536.12 ft

Surface Water Elev. N/A ft
Stream Bed Elev. N/A ft

Groundwater Elev.:
First Encounter 519.8 ft ▼
Upon Completion N/A ft
After ___ Hrs. N/A ft

Description	Elev.	DEPTH (ft)	BLOWS (/6")	UCS Qu (tsf)	MOIST (%)
2 inches of Topsoil	535.95				
Medium Dense to Dense Light Brown, Dry to Moist SAND, with gravel (SPG)			17		
			23 18		6
Cobbles from 2.5 to 5 feet			16		
			21 25		4
		-5	5		
			9 16		7
			4		
			10 5		8
		-10	7		
			19 16		6
			6		
			12 7		9
		-15			
Very Dense Gray, Moist WEATHERED LIMESTONE	520.12 / 519.62 ▼		50/2"		9
Auger refusal at 16.5 feet End of Boring		-20			

The Unconfined Compressive Strength (UCS) Failure Mode is indicated by (B-Bulge, S-Shear, P-Penetrometer)
The SPT (N value) is the sum of the last two blow values in each sampling zone (AASHTO T206)

BBS, form 137 (Rev. 8-99)

MODEL: Default
FILE NAME: 099W040-62F94-SK-07-BoringLog2.dgn

SGG
1111 BURLINGTON AVE., SUITE 111 - LISLE, IL 60532
(630) 641-9800

USER NAME = jsandoval	DESIGNED - JSS	REVISED -	
	CHECKED - RRD	REVISED -	
PLOT SCALE = 0.167 ' / in.	DRAWN - TCK	REVISED -	
PLOT DATE = 10/28/2025	CHECKED - RRD	REVISED -	

STATE OF ILLINOIS
DEPARTMENT OF TRANSPORTATION

BORING LOGS (SHEET 2 OF 2)
STRUCTURE NO. 099-W040

SHEET SK-07 OF SK-07 SHEETS

F.A.I. RTE.	SECTION	COUNTY	TOTAL SHEETS	SHEET NO.
80	2017-057F	WILL	1342	977
		CONTRACT NO. 62F94		
	ILLINOIS	FED. AID PROJECT		

10/28/2025 10:07:10 AM

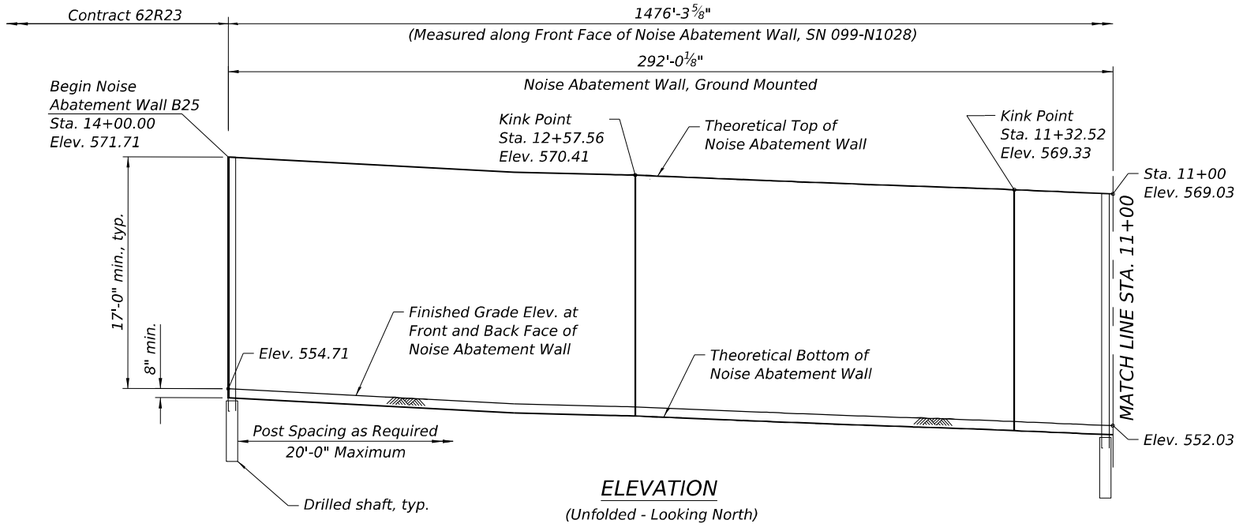

ELEVATION

(Unfolded - Looking North)

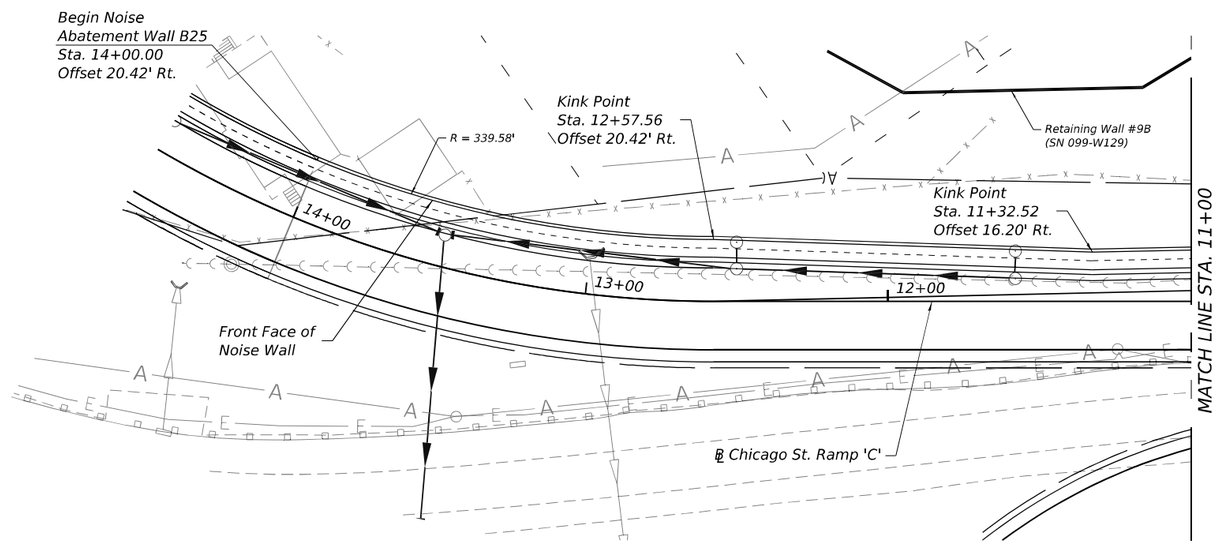

PLAN

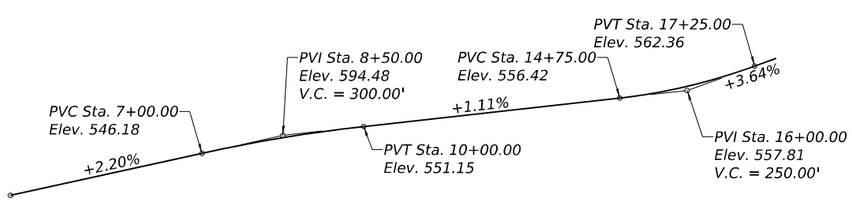

PROFILE GRADE

(Along ℄ Proposed Chicago St. Ramp 'C')

CURVE DATA

PR CURVE RAMP C
PI STA = 14+34.93
Δ = 52°25'33" (RT)
D = 15°54'56"
R = 360.00'
T = 177.24'
L = 329.40
E = 41.27'
PC STA = 12+57.68
PT STA = 15+87.08

NOTES:

1. For General Notes and Total Bill of Material, see Sheet SL-05.
2. Stations are measured along and Offsets are measured from Front Face of Noise Abatement Wall to ℄ Prop. Chicago St. Ramp 'C' and ℄ Prop. Chicago St.
3. Length of ground mounted wall and structure mounted wall is measured along Front Face of Noise Abatement Wall.

INDEX OF SHEETS

DESIGN SPECIFICATIONS

2020 AASHTO LRFD Bridge Design Specifications, 9th Edition

DESIGN STRESSES

FIELD UNITS

f'c = 4,000 psi
fy = 60,000 psi (Reinforcement)
fy = 50,000 psi (Struct. Steel, M270 Grade 50, posts)
fy = 36,000 psi (Struct. Steel, M270 Grade 36, all other structural steel)

PRECAST UNITS

f'c = 4,500 psi
fy = 60,000 psi (Reinforcement)
fy = 65,000 psi (Welded Wire Reinforcement)

DESIGN LOADS

Strength III or V Wind : 35 psf
Service I Wind : 15 psf

LEGEND

- Proposed ROW line
- Proposed Electric line
- Proposed Storm Sewer
- Existing ROW line
- Existing Telephone line
- Existing Aerial line
- Existing Electric line
- Existing Fiber Optic line
- Existing Gas line
- Existing Sanitary Sewer
- Existing Storm Sewer
- Existing Water main
- Existing Cable TV line
- Soil Boring location

STATE OF ILLINOIS
PATRICK J. LAUX
081-007655
CHICAGO, ILLINOIS
LICENSED STRUCTURAL ENGINEER

10/31/2025

Patrick J. Laux, P.E., S.E.
State of Illinois Lic. No. 081-007655
License Expires 11-30-2026.
This stamp applies to sheets SL-01 thru SL-08

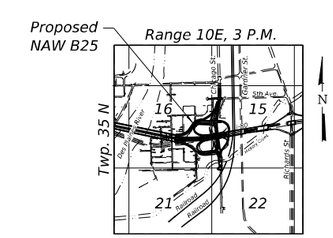

LOCATION SKETCH

GENERAL PLAN AND ELEVATION 1
NOISE ABATEMENT WALL B25 ALONG CHICAGO ST. RAMP C
F.A.I. RTE. 80 - SEC. 2017-057F
WILL COUNTY
STA. 14+00.00 TO STA. 223+46.88
STRUCTURE NO. 099-N1028

MODEL: Default
FILE NAME: D162F94-GPE_B25-01.dgn

WSP USA Inc.
30 N. LASALLE STREET
SUITE 4200
CHICAGO, IL 60602
TEL: (312) 782-8150
FAX: (312) 782-1684

USER NAME = USGM717780	DESIGNED - MIS	REVISED -	
	CHECKED - PJL	REVISED -	
PLOT SCALE = 50.00 ' / in.	DRAWN - GM	REVISED -	
PLOT DATE = 12/2/2025	CHECKED - MIS	REVISED -	

STATE OF ILLINOIS
DEPARTMENT OF TRANSPORTATION

SHEET SL-01 OF SL-08 SHEETS

F.A.I RTE.	SECTION	COUNTY	TOTAL SHEETS	SHEET NO.
80	2017-057F	WILL	1342	978
		CONTRACT NO. 62F94		
		ILLINOIS	FED. AID PROJECT	

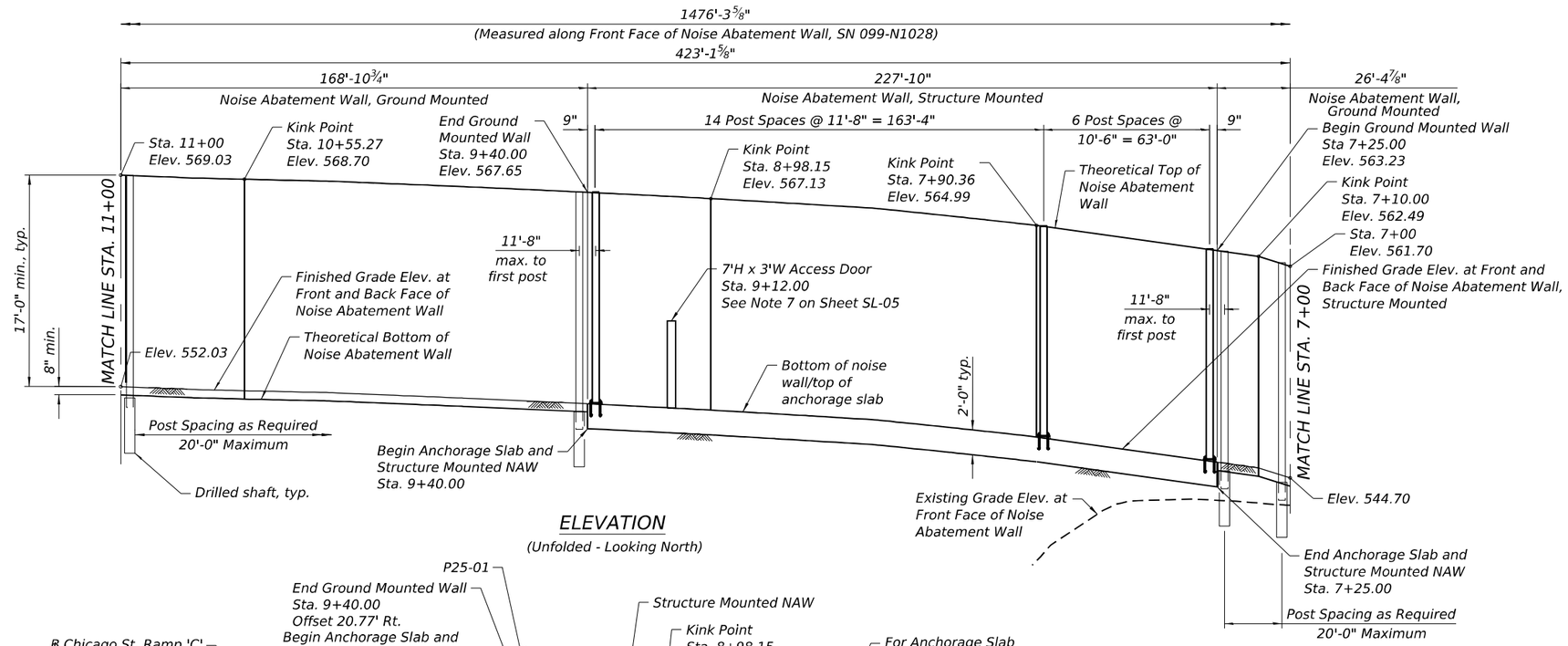

ELEVATION

(Unfolded - Looking North)

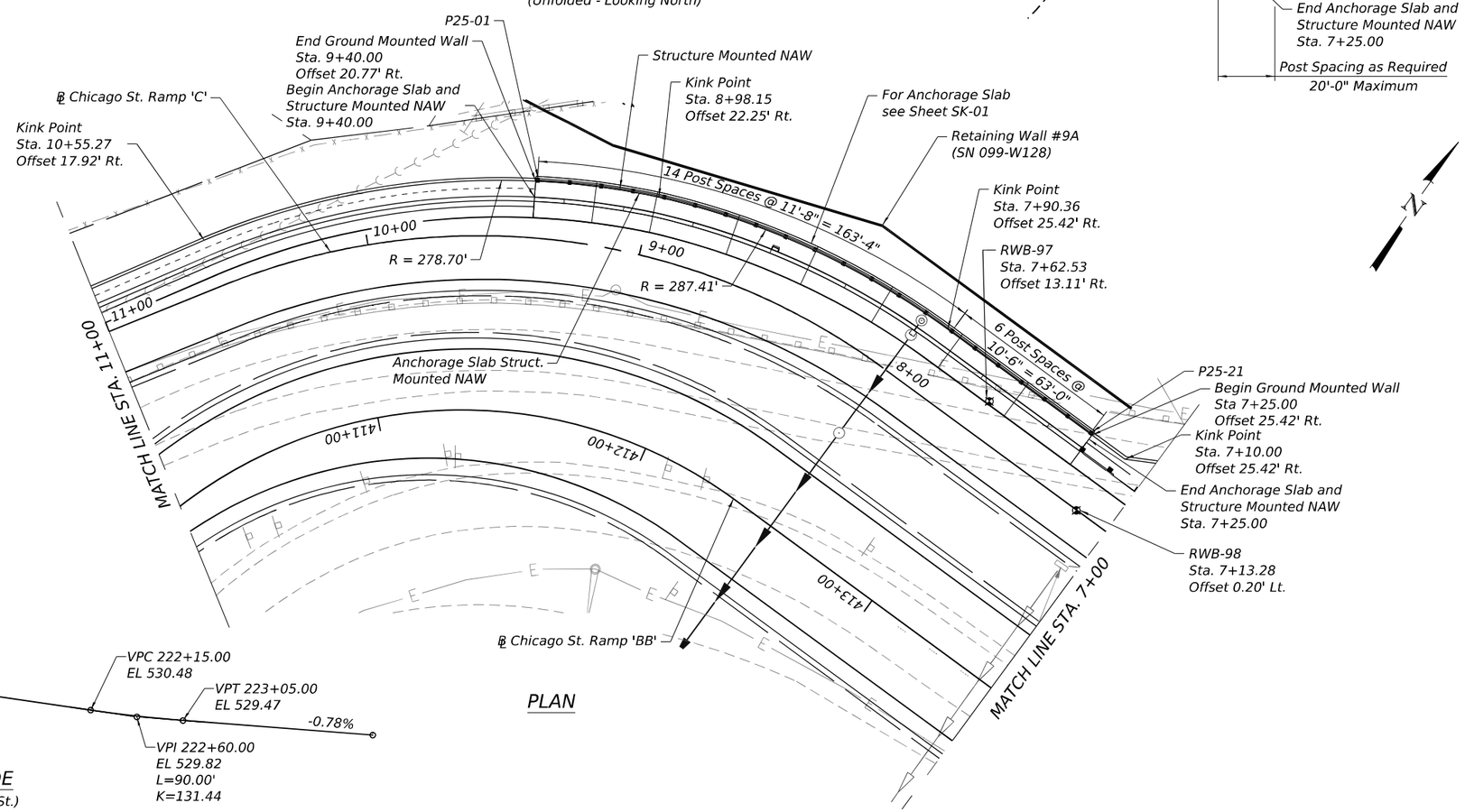

CURVE DATA

PR CURVE RAMP C
PI STA = 9+40.44
Δ = 58°19'14" (LT)
D = 22°55'06"
R = 250.00'
T = 139.49'
L = 254.47'
E = 36.28'
e = 6.0%
PC STA = 8+00.95
PT STA = 10+55.42

PLAN

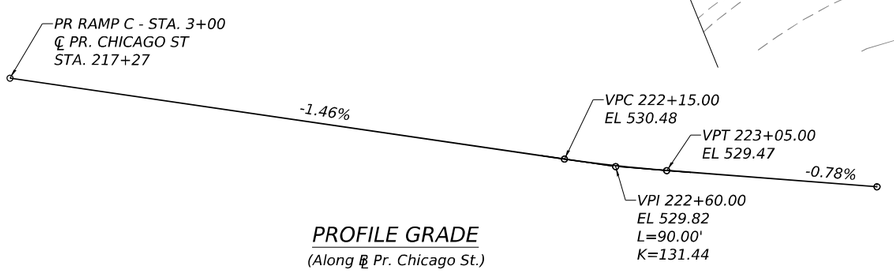

PROFILE GRADE

(Along ℄ Pr. Chicago St.)

MODEL: Default
FILE NAME: D162F94-GPE B25-02.dgn

WSP USA Inc.
30 N. LASALLE STREET
SUITE 4200
CHICAGO, IL 60602
TEL: (312) 782-8150
FAX: (312) 782-1684

USER NAME = USGM717780	DESIGNED - MIS	REVISED -	
	CHECKED - PJL	REVISED -	
PLOT SCALE = 50.00 ' / in.	DRAWN - GM	REVISED -	
PLOT DATE = 12/2/2025	CHECKED - MIS	REVISED -	

STATE OF ILLINOIS
DEPARTMENT OF TRANSPORTATION

GENERAL PLAN AND ELEVATION 2
NOISE ABATEMENT WALL B25 - STRUCTURE NO. 099-N1028

SHEET SL-02 OF SL-08 SHEETS

F.A.I RTE.	SECTION	COUNTY	TOTAL SHEETS	SHEET NO.
80	2017-057F	WILL	1342	979
		CONTRACT NO. 62F94		
	ILLINOIS	FED. AID PROJECT		

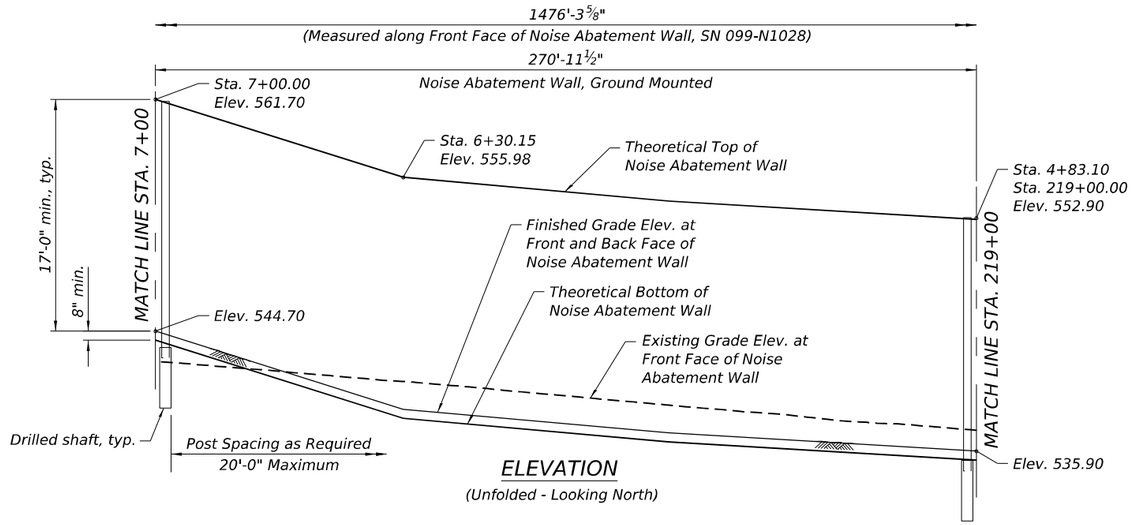

ELEVATION

(Unfolded - Looking North)

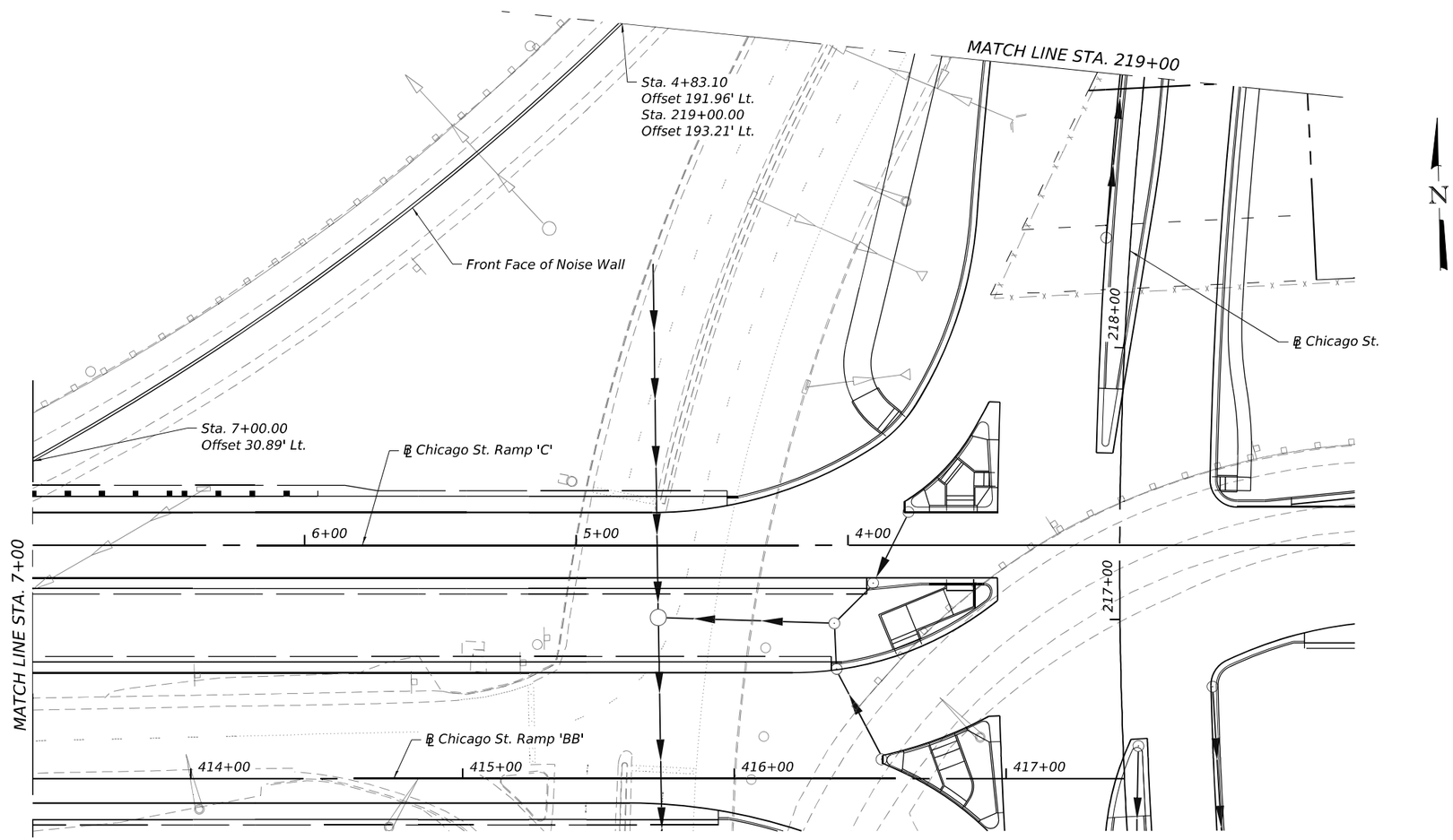

PLAN

MODEL: Default
FILE NAME: D162F94-GPE_B25-03.dgn

WSP USA Inc.
30 N. LASALLE STREET
SUITE 4200
CHICAGO, IL 60602
TEL: (312) 782-8150
FAX: (312) 782-1684

USER NAME = USGM717780	DESIGNED - MIS	REVISED -	
	CHECKED - PJL	REVISED -	
PLOT SCALE = 50.000 ' / in.	DRAWN - GM	REVISED -	
PLOT DATE = 12/2/2025	CHECKED - MIS	REVISED -	

STATE OF ILLINOIS
DEPARTMENT OF TRANSPORTATION

GENERAL PLAN AND ELEVATION 3
NOISE ABATEMENT WALL B25 - STRUCTURE NO. 099-N1028

SHEET SL-03 OF SL-08 SHEETS

F.A.I RTE.	SECTION	COUNTY	TOTAL SHEETS	SHEET NO.
80	2017-057F	WILL	1342	980
		CONTRACT NO. 62F94		
		ILLINOIS	FED. AID PROJECT	

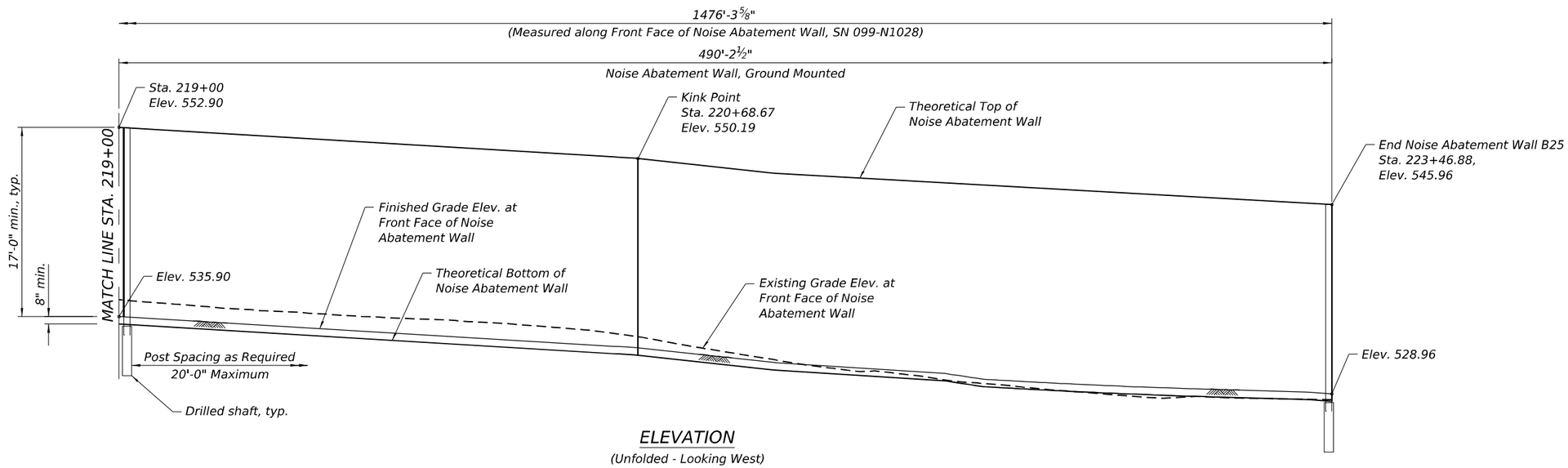

ELEVATION

(Unfolded - Looking West)

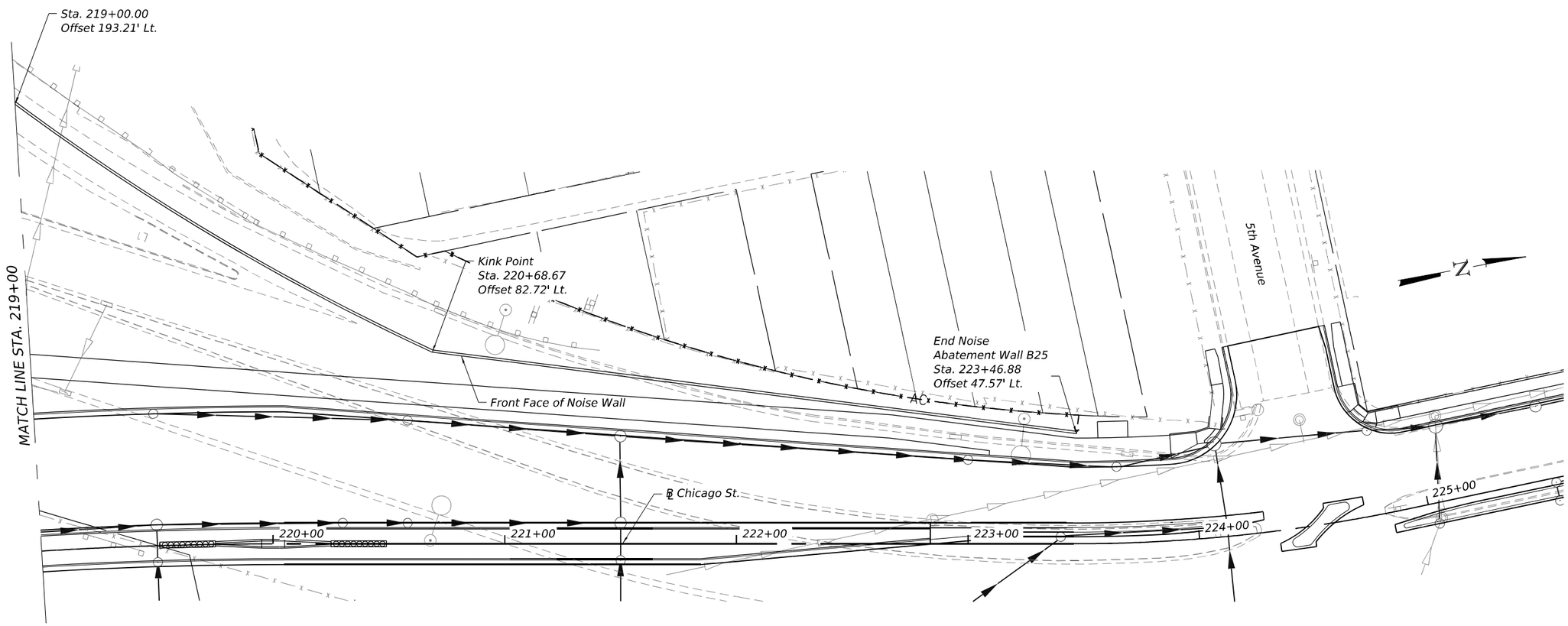

PLAN

MODEL: Default
FILE NAME: D162F94-GPE_B25-04.dgn

WSP USA Inc.
30 N. LASALLE STREET
SUITE 4200
CHICAGO, IL 60602
TEL: (312) 782-8150
FAX: (312) 782-1684

USER NAME = USGM717780	DESIGNED - MIS	REVISED -	
	CHECKED - PJL	REVISED -	
PLOT SCALE = 50.000 ' / in.	DRAWN - GM	REVISED -	
PLOT DATE = 12/2/2025	CHECKED - MIS	REVISED -	

STATE OF ILLINOIS
DEPARTMENT OF TRANSPORTATION

GENERAL PLAN AND ELEVATION 4
NOISE ABATEMENT WALL B25 - STRUCTURE NO. 099-N1028

SHEET SL-04 OF SL-08 SHEETS

F.A.I RTE.	SECTION	COUNTY	TOTAL SHEETS	SHEET NO.
80	2017-057F	WILL	1342	981
		CONTRACT NO. 62F94		
		ILLINOIS	FED. AID PROJECT	

GENERAL NOTES:

1. Theoretical Top of Wall Elev., Theoretical Bottom of Wall Elev., Finished Grade Elev. at Front Face of Wall and Finished Grade Elev. at Back Face of Wall shall be taken as straight lines in the segments between the stations shown in the Noise Wall Data Table.
2. See Noise Abatement Wall, Ground Mounted and Noise Abatement Wall, Structure Mounted Special Provision for material, design, fabrication, construction, erection and other requirements for installation of proposed Noise Abatement Wall.
3. The existing utilities will be adjusted. The Contractor shall field verify location of the existing utilities prior to construction. The Contractor shall take precautions not to damage existing utilities. Any such damage shall be repaired by the Contractor at no additional cost.
4. Noise Abatement Wall drilled shaft foundation diameter, depth and spacing to be determined by the Contractor. See Noise Abatement Wall, Ground Mounted Special Provision to design NAW foundation on fill where soil boring data is not available but the spacing shall not exceed 20 ft.
5. Contractor shall provide Ashlar Stone Finish on both faces of Noise Abatement Wall.
6. The default color of both sides of the NAW panels, posts and other visible elements shall be Federal Standard 30279 - Sand.
7. Access door location shown in the plans is approximate and may be adjusted to accommodate final fire hydrant locations provided by the City of Joliet. This work shall be included as part of the respective Noise Abatement Wall costs.

TOTAL BILL OF MATERIAL

ITEM	UNIT	TOTAL
Noise Abatement Wall, Ground Mounted	Sq. Ft.	22,061
Noise Abatement Wall, Structure Mounted	Sq. Ft.	3,873

NOISE REDUCTION DATA

Face	From Sta.	To Sta.	Noise Reduction Coefficient	Comments
Ramp C/Chicago St. face	14+00.00	223+46.88	Reflective	-
Residential face	14+00.00	223+46.88	Reflective	-

UTILITY CROSSING TABLE

Utility	Station	Offset	Elev.	Comments
Exist. Underground Sanitary Sewer	10+04.14	18.94 Rt.	-	-
Exist. Underground Electric	7+41.70	25.42 Rt.	-	-
Exist. Underground Storm Sewer	5+35.94	144.09 Rt.	-	-
Exist. Underground Storm Sewer	219+16.96	178.00 Rt.	-	-

NOISE ABATEMENT WALL B25 (DATA TABLE 1)

Station	Offset (Rt) to Front Face of NAW (ft.)	Theoretical top of NAW Elev.	℄ Chicago St. Ramp 'C'/ Chicago St., Elev.	Finished Grade Elev. at Front Face of NAW	Finished Grade Elev. At Back Face of NAW	Ex. Grade Elev. At Front Face of NAW	Theoretical Bottom of NAW Elev.	Theoretical Wall Height (ft)
14+00.00	20.42	571.71	555.59	554.71	554.71	523.60	554.04	17.67
13+50.00	20.42	571.16	555.03	554.16	554.16	522.50	553.49	17.67
13+00.00	20.42	570.63	554.48	553.63	553.63	521.76	552.96	17.67
12+57.56	20.42	570.41	559.01	553.41	553.41	522.48	552.74	17.67
12+00.00	18.48	569.88	553.37	552.88	552.88	525.61	552.21	17.67
11+50.00	16.79	569.48	552.81	552.48	552.48	526.81	551.81	17.67
11+32.52	16.20	569.33	557.62	552.33	552.33	527.45	551.66	17.67
11+00.00	16.92	569.03	552.26	552.03	552.03	527.59	551.36	17.67
10+55.27	17.92	568.70	556.76	551.70	551.70	526.66	551.03	17.67
10+00.00	19.04	568.29	551.15	551.29	551.29	524.60	550.62	17.67
9+75.00	19.68	568.01	555.86	551.04	551.04	523.93	550.37	17.67
9+50.00	20.43	568.77	550.55	550.77	550.77	524.65	550.10	17.67
8+98.15	22.25	567.13	554.85	550.13	550.13	526.61	550.13	17.00
8+50.00	23.48	566.44	549.08	549.44	549.44	529.35	549.44	17.00
7+90.36	25.42	564.99	553.02	547.99	547.99	538.04	547.99	17.00
7+50.00	25.42	563.92	547.24	546.92	546.92	542.89	546.92	17.00
7+10.00	25.42	562.49	551.40	545.49	545.49	542.68	544.82	17.67
7+00.00	30.89	561.70	546.18	544.70	544.70	542.49	544.03	17.67
6+50.00	60.52	557.63	545.08	540.63	540.63	541.43	539.96	17.67
6+30.15	73.38	555.98	544.64	538.98	538.98	540.98	538.31	17.67
6+00.00	94.19	555.26	543.98	538.26	538.26	540.30	537.59	17.67
5+50.00	132.43	554.09	542.88	537.09	537.09	539.05	536.42	17.67
5+00.00	175.91	553.21	541.78	536.21	536.21	537.86	535.54	17.67
4+83.10/219+00.00	191.96/193.21	552.90	535.08	535.90	535.90	537.43	535.23	17.67
219+50.00	152.46	551.98	534.35	534.98	534.98	536.33	534.31	17.67
220+00.00	117.73	551.14	533.62	534.14	534.14	535.60	533.47	17.67
220+50.00	91.60	550.39	532.89	533.39	533.39	534.70	532.72	17.67
220+68.67	82.72	550.19	532.61	533.19	533.19	534.27	532.52	17.67
221+00.00	78.76	549.34	532.16	532.34	532.34	532.87	531.67	17.67
221+50.00	72.44	548.40	531.43	531.40	531.40	531.17	530.73	17.67
222+00.00	66.12	547.52	530.70	530.52	530.52	530.01	529.85	17.67
222+50.00	59.80	546.78	530.01	529.78	529.78	529.05	529.11	17.67
223+00.00	53.48	546.37	526.51	529.37	529.37	528.66	528.70	17.67
223+46.88	47.57	545.96	529.15	528.96	528.96	528.48	528.29	17.67

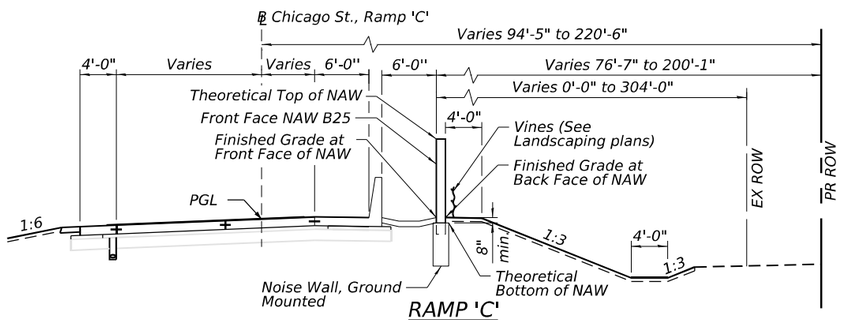

RAMP 'C'

TYPICAL SECTION ALONG NAW B25

Sta. 4+83.10 to Sta. 7+25.00
Sta. 9+40.00 to Sta. 10+87.76
Sta. 12+20.22 to Sta. 14+00.00
(Looking West)

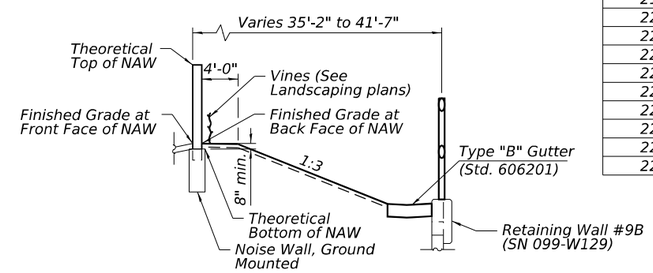

RETAINING WALL DETAIL
TYPICAL SECTION ALONG NAW B25

10+87.76 to 12+20.22
(Looking West)

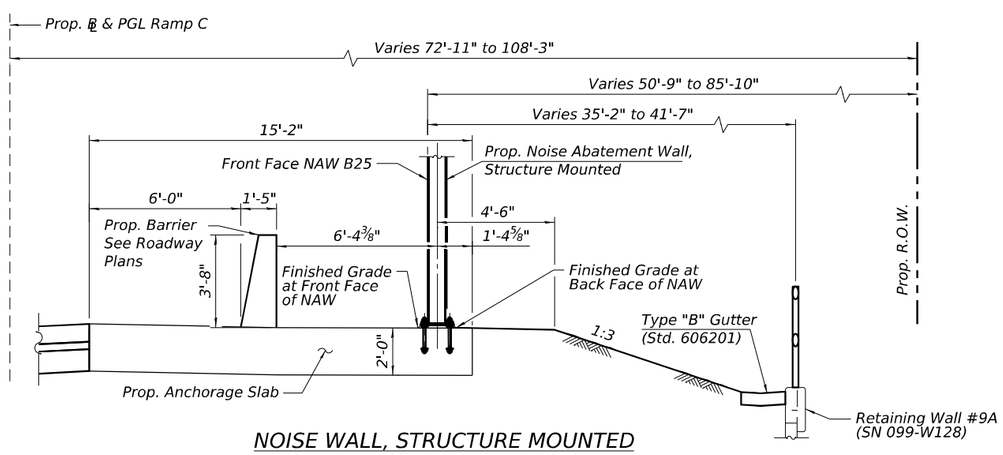

NOISE WALL, STRUCTURE MOUNTED

Sta. 7+25.00 to Sta. 9+40.00
(Looking West)

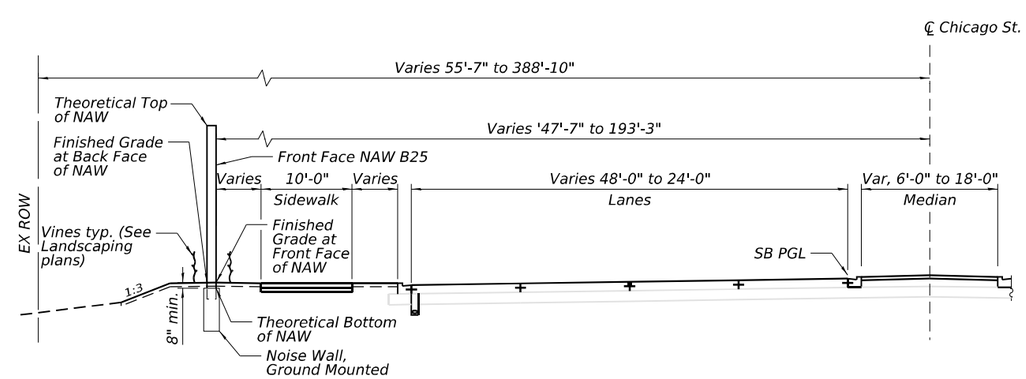

PROPOSED CHICAGO STREET TYPICAL SECTION

CHICAGO STREET - STA. 219+00.00 TO STA. 223+46.88
(Looking North)

MODEL: Default
FILE NAME: D162F94-DET_B25-05.dgn

WSP USA Inc.
30 N. LASALLE STREET
SUITE 4200
CHICAGO, IL 60602
TEL: (312) 782-8150
FAX: (312) 782-1684

USER NAME = USGM717780	DESIGNED - MIS	REVISED -	
	CHECKED - PJL	REVISED -	
PLOT SCALE = 50:0 ':" / in.	DRAWN - GM	REVISED -	
PLOT DATE = 12/2/2025	CHECKED - MIS	REVISED -	

STATE OF ILLINOIS
DEPARTMENT OF TRANSPORTATION

GENERAL NOTES AND TOTAL BILL OF MATERIAL
NOISE ABATEMENT WALL B25 - STRUCTURE NO. 099-1028

SHEET SL-05 OF SL-08 SHEETS

F.A.I RTE.	SECTION	COUNTY	TOTAL SHEETS	SHEET NO.
80	2017-057F	WILL	1342	982
		CONTRACT NO. 62F94		
	ILLINOIS	FED. AID PROJECT		

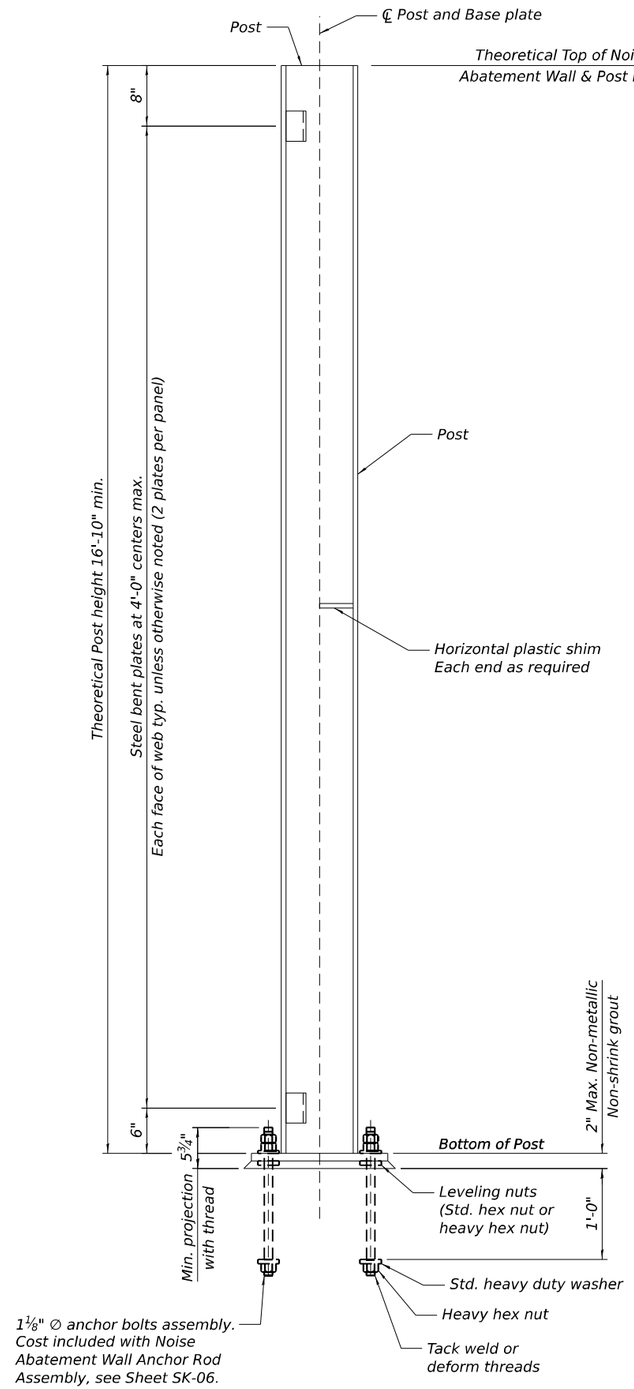

SIDE VIEW

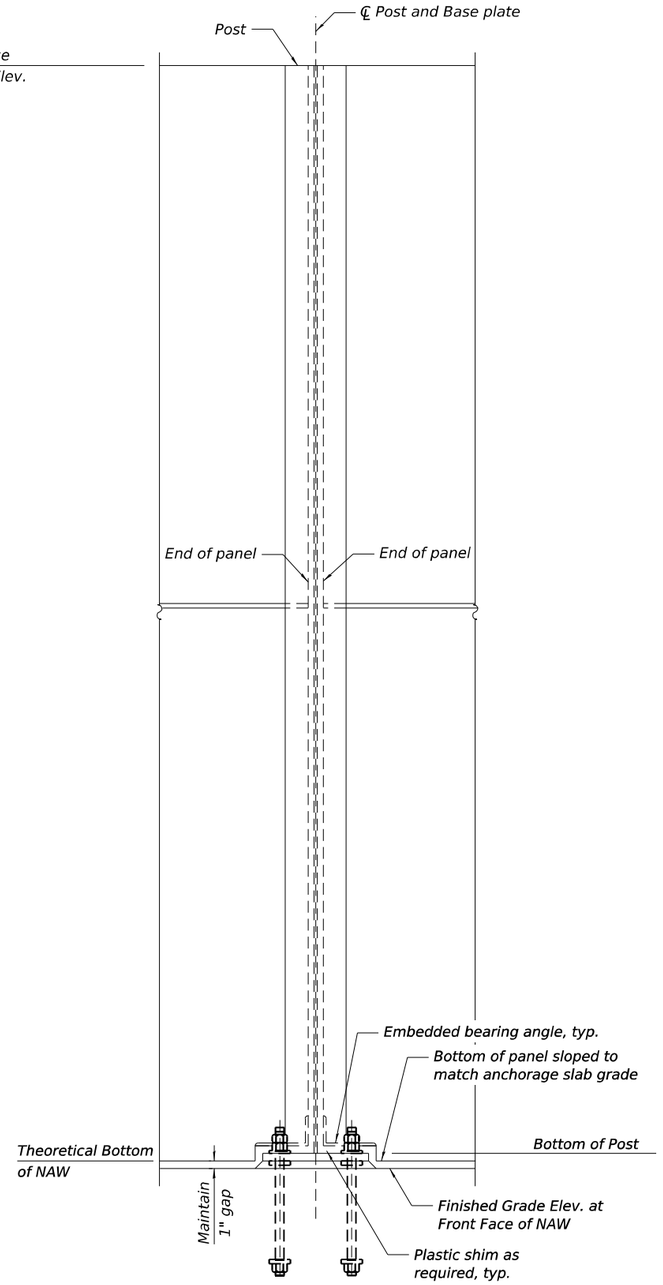

FRONT VIEW

NOISE ABATEMENT WALL, STRUCTURE MOUNTED B25 (DATA TABLE 2)

Post	Station	Offset to Centerline of Post* (ft)	Theoretical top of NAW Elev.	℄ Chicago St. Ramp 'C' Elev.	Finished Grade Elev. at Front Face of NAW	Theoretical Bottom of NAW Elev.	Theoretical Post Height (ft)	Theoretical Wall Height (ft)
P25-01	9+39.32	21.16	567.65	550.41	550.65	550.73	16.83	17
P25-02	9+28.56	21.53	567.52	550.26	550.52	550.60	16.83	17
P25-03	9+17.82	21.90	567.39	550.11	550.39	550.47	16.83	17
P25-04	9+07.09	22.29	567.27	549.96	550.27	550.35	16.83	17
P25-05	8+96.37	22.66	567.12	549.80	550.12	550.20	16.83	17
P25-06	8+85.67	22.89	566.98	549.64	549.98	550.06	16.83	17
P25-07	8+74.97	23.14	566.81	549.47	549.81	549.89	16.83	17
P25-08	8+64.29	23.43	566.66	549.23	549.66	549.74	16.83	17
P25-09	8+53.62	23.73	566.50	549.13	549.50	549.58	16.83	17
P25-10	8+42.96	24.06	566.34	548.95	549.34	549.42	16.83	17
P25-11	8+32.32	24.42	566.10	548.76	549.10	549.18	16.83	17
P25-12	8+21.69	24.79	565.79	548.58	548.79	548.87	16.83	17
P25-13	8+11.07	25.19	565.51	548.39	548.51	548.59	16.83	17
P25-14	8+00.43	25.61	565.23	548.19	548.23	548.31	16.83	17
P25-15	7+88.75	25.79	564.98	547.99	547.98	548.06	16.83	17
P25-16	7+78.25	25.79	564.70	547.80	547.70	547.78	16.83	17
P25-17	7+67.75	25.79	564.43	547.60	547.43	547.51	16.83	17
P25-18	7+57.25	25.79	564.15	547.39	547.15	547.23	16.83	17
P25-19	7+46.75	25.79	563.87	547.17	546.87	546.95	16.83	17
P25-20	7+36.25	25.79	563.58	546.96	546.58	546.66	16.83	17
P25-21	7+25.75	25.79	563.26	546.74	546.26	546.34	16.83	17

*Offsets are taken from ℄ Chicago St. Ramp C

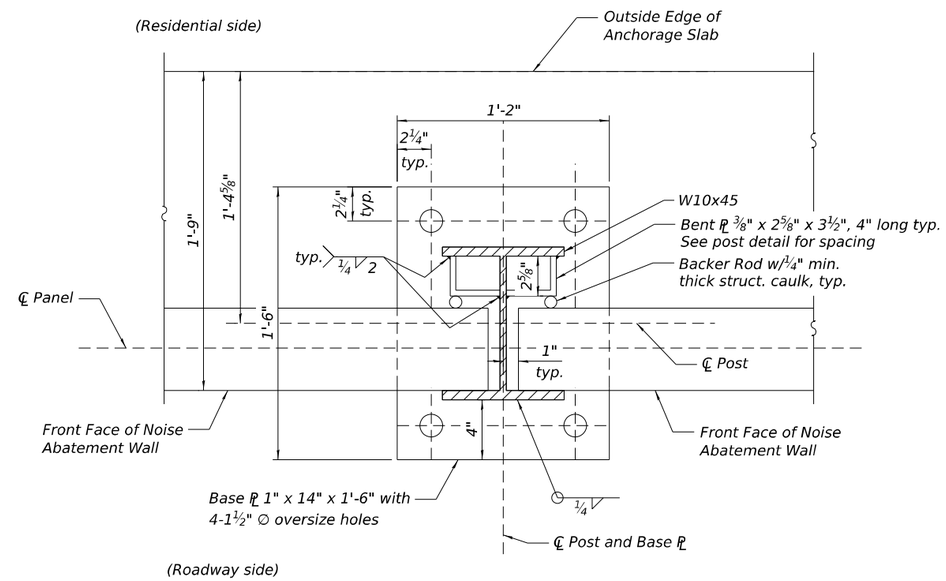

BASE PLATE AND POST DETAIL

Note:
Cost of posts, bent plates, backer rod, bearing angles, etc. are included in Noise Abatement Wall, Structure Mounted.

MODEL: Default
FILE NAME: D162F94-DET-B25-06.dgn

WSP USA Inc.
30 N. LASALLE STREET
SUITE 4200
CHICAGO, IL 60602
TEL: (312) 782-8150
FAX: (312) 782-1684

USER NAME = USGM717780	DESIGNED - MIS	REVISED -	
	CHECKED - PJL	REVISED -	
PLOT SCALE = 3.333 ' / in.	DRAWN - GM	REVISED -	
PLOT DATE = 12/2/2025	CHECKED - MIS	REVISED -	

STATE OF ILLINOIS
DEPARTMENT OF TRANSPORTATION

WALL DETAILS 1
NOISE ABATEMENT WALL B25 - STRUCTURE NO. 099-N1028
SHEET SL-06 OF SL-08 SHEETS

F.A.I RTE.	SECTION	COUNTY	TOTAL SHEETS	SHEET NO.
80	2017-057F	WILL	1342	983
		CONTRACT NO. 62F94		
		ILLINOIS	FED. AID PROJECT	

Notes:
Each side of the noise wall panels shall have a rolled ashlar stone finish. The finish shall have a 1 ½" relief for noise abatement wall, ground mounted and a ¾" relief for noise abatement wall, structure mounted. The color of both sides of the panels, plain band, posts and all other visible elements shall follow the special provisions.

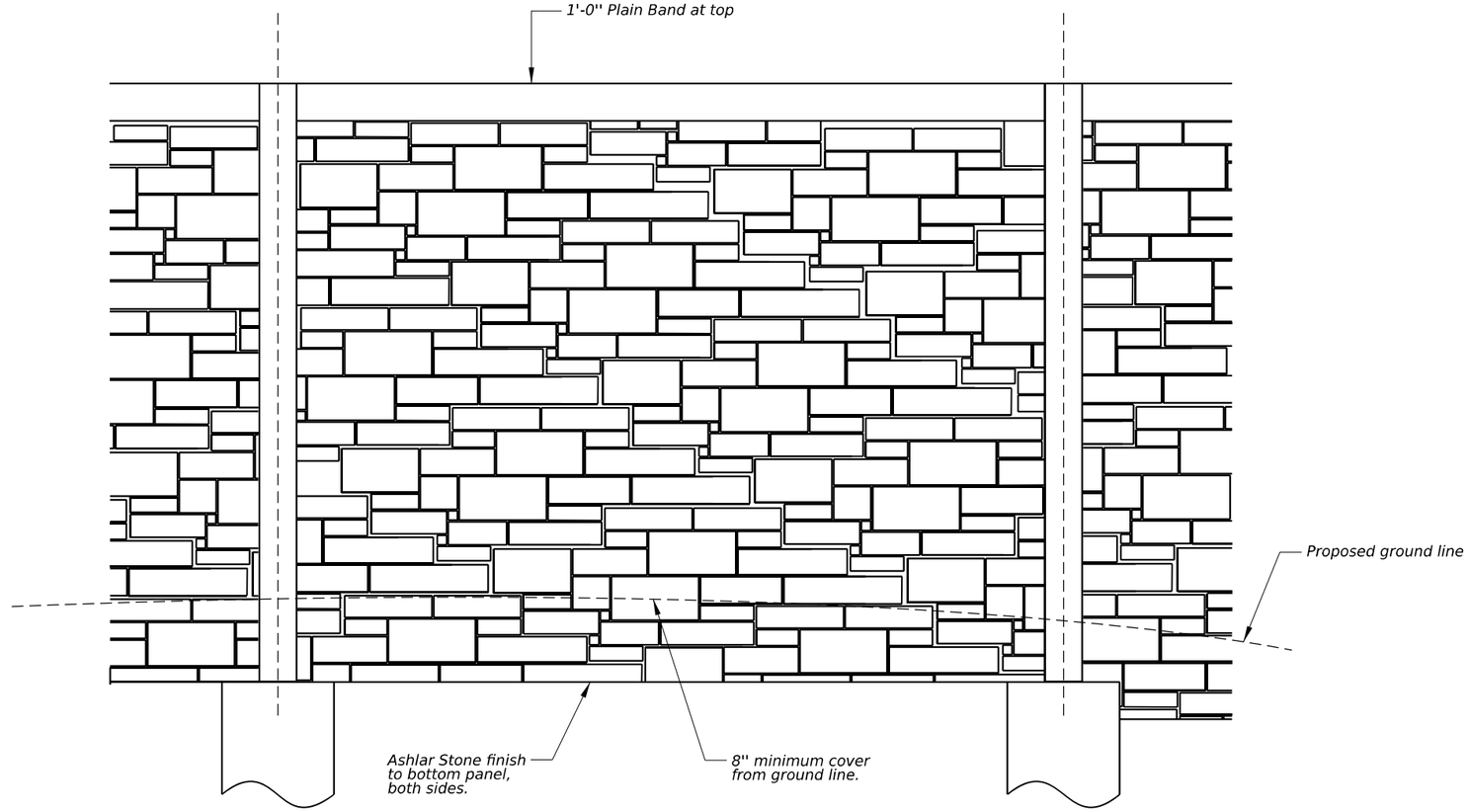

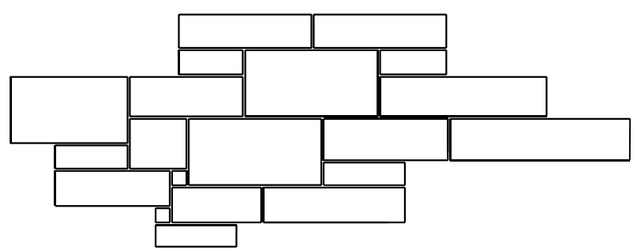

Stone Pattern Sizes:
3" x 3" - 14" x 28"

ENLARGED PATTERN DETAIL

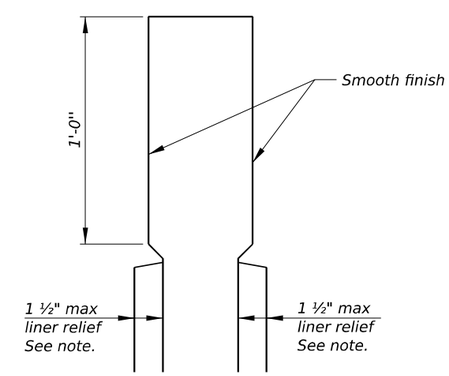

ENLARGED CAP DETAIL

MODEL: Default
FILE NAME: D162F94-DET B25-07.dgn

WSP USA Inc.
30 N. LASALLE STREET
SUITE 4200
CHICAGO, IL 60602
TEL: (312) 782-8150
FAX: (312) 782-1684

USER NAME = USGM717780	DESIGNED - MIS	REVISED -	
	CHECKED - PJL	REVISED -	
PLOT SCALE = 0.167 ' / in.	DRAWN - GM	REVISED -	
PLOT DATE = 12/2/2025	CHECKED - MIS	REVISED -	

STATE OF ILLINOIS
DEPARTMENT OF TRANSPORTATION

WALL DETAILS 2
NOISE ABATEMENT WALL B25 - STRUCTURE NO. 099-N1028

SHEET SL-07 OF SL-08 SHEETS

F.A.I RTE.	SECTION	COUNTY	TOTAL SHEETS	SHEET NO.
80	2017-057F	WILL	1342	984
		CONTRACT NO. 62F94		
	ILLINOIS	FED. AID PROJECT		

Illinois Department of Transportation
Division of Highways
GSC

SOIL BORING LOG

Page 1 of 1

Date 9/15/22

ROUTE I-80 DESCRIPTION Retaining Wall No. 9A - Ramp C LOGGED BY KA

SECTION C-91-109-22 LOCATION SEC. 16, TWP. 35 N, RNG. 10 E,
Latitude 41.5130955, Longitude -88.0833101

COUNTY Will DRILLING RIG Diedrich D-50 HAMMER TYPE Auto
DRILLING METHOD HSA HAMMER EFF (%) 96

STRUCT. NO. 099-W128
Station

BORING NO. RWB-97
Station 7+62.5329
Offset 13.11ft RT
Ground Surface Elev. 543.52 ft

Surface Water Elev. N/A ft
Stream Bed Elev. N/A ft

Groundwater Elev.:
First Encounter Dry ft
Upon Completion N/A ft
After ___ Hrs. N/A ft

Description	Elev.	DEPTH (ft)	BLOWS (/6")	UCS Qu (tsf)	MOIST (%)
3 inches of Topsoil	543.27				
Brown, Moist FILL: SILTY CLAY LOAM, trace sand, gravel			5		
			7	1.3	10
			5	P	
	541.02				
Brown, Moist FILL: SILTY CLAY, trace gravel					
			3		
			3	2.5	21
		-5	3	P	
Cobbles at 6 feet			2		
			2	0.8	23
			3	P	
			2		
			3	2.5	19
	533.52	-10	5	P	
Brown and Gray, Moist FILL: SILTY CLAY, trace gravel					
			5		
			8	4.4	23
			6	R	
			5		
			6	2.5	19
		-15	7	B	
Cobbles at 16 feet			3		
			5	1.5	18
			50/3"	P	
			50/2"		
					NR
	523.52	-20			

Description	Elev.	DEPTH (ft)	BLOWS (/6")	UCS Qu (tsf)	MOIST (%)
Medium Dense to Very Dense Light Gray and Brown, Dry to Moist SAND, with gravel (SPG)			6		
			9		5
			50/2"		
Clay seam at 23.5 feet			11		
			9		11
		-25	20		
			50/1"		
					NR
	515.02				
Gray LIMESTONE, moderately weathered, moderately fractured		-30			
Run 1: 28.5' - 38.5' Recovery: 85.8% RQD: 55.1% (Fair)					
2-inch gravel seam at 28.5 feet					
		-35			
	505.02				
End of Boring		-40			

The Unconfined Compressive Strength (UCS) Failure Mode is indicated by (B-Bulge, S-Shear, P-Penetrometer)
The SPT (N value) is the sum of the last two blow values in each sampling zone (AASHTO T206)

BBS, form 137 (Rev. 8-99)

Illinois Department of Transportation
Division of Highways
GSC

SOIL BORING LOG

Page 1 of 1

Date 9/15/22

ROUTE I-80 DESCRIPTION Retaining Wall No. 9A - Ramp C LOGGED BY KA

SECTION C-91-109-22 LOCATION SEC. 16, TWP. 35 N, RNG. 10 E,
Latitude 41.5131277, Longitude -88.0831292

COUNTY Will DRILLING RIG Diedrich D-50 HAMMER TYPE Auto
DRILLING METHOD HSA HAMMER EFF (%) 96

STRUCT. NO. 099-W128
Station

BORING NO. RWB-98
Station 7+13.2830
Offset 0.20ft LT
Ground Surface Elev. 542.24 ft

Surface Water Elev. N/A ft
Stream Bed Elev. N/A ft

Groundwater Elev.:
First Encounter Dry ft
Upon Completion N/A ft
After ___ Hrs. N/A ft

Description	Elev.	DEPTH (ft)	BLOWS (/6")	UCS Qu (tsf)	MOIST (%)
3 inches of Topsoil	541.99				
Dark Brown, Moist FILL: SILTY CLAY, trace sand, gravel			6		
			4	0.5	19
			3	P	
	539.74				
Brown and Gray, Moist FILL: SILTY CLAY, trace gravel					
			3		
			3	2.5	21
		-5	3	P	
			2		
			2	1.5	20
			3	P	
			3		
			2	2.0	21
		-10	3	P	
			3		
			3	1.9	16
	529.74		3	B	
Dark Brown and Dark Gray, Moist FILL: SILTY CLAY, trace sand, gravel			3		
			5	1.9	21
		-15	4	B	
Cobbles at 16 feet			3		
			4	1.9	22
			9	B	
	523.74				
Loose to Medium Dense Light Gray, Dry SAND, with gravel (SPG)			28		
			11		4
		-20	7		

Description	Elev.	DEPTH (ft)	BLOWS (/6")	UCS Qu (tsf)	MOIST (%)
Loose to Medium Dense Light Gray, Dry SAND, with gravel (SPG) *(continued)*			5		
			5		NR
	519.74		1		
Medium Dense to Very Dense Brown and Light Gray, Moist to Wet SAND, with gravel (SPG)			11		
			15		15
		-25	8		
			14		
			14		16
			50/3"		
	513.74				
Auger refusal at 28.5 feet End of Boring		-30			
		-35			
		-40			

The Unconfined Compressive Strength (UCS) Failure Mode is indicated by (B-Bulge, S-Shear, P-Penetrometer)
The SPT (N value) is the sum of the last two blow values in each sampling zone (AASHTO T206)

BBS, form 137 (Rev. 8-99)

MODEL: Default
FILE NAME: D162F94-SBL_B25-08.dgn

WSP USA Inc.
30 N. LASALLE STREET
SUITE 4200
CHICAGO, IL 60602
TEL: (312) 782-8150
FAX: (312) 782-1684

USER NAME = USGM717780	DESIGNED - MIS	REVISED -	
	CHECKED - PJL	REVISED -	
PLOT SCALE = 0.167 ' / in.	DRAWN - GM	REVISED -	
PLOT DATE = 12/2/2025	CHECKED - MIS	REVISED -	

STATE OF ILLINOIS
DEPARTMENT OF TRANSPORTATION

SOIL BORING LOGS
NOISE ABATEMENT WALL B25 - STRUCTURE NO. 099-N1028

SHEET SL-08 OF SL-08 SHEETS

F.A.I RTE.	SECTION	COUNTY	TOTAL SHEETS	SHEET NO.
80	2017-057F	WILL	1342	985
		CONTRACT NO. 62F94		
		ILLINOIS	FED. AID PROJECT	

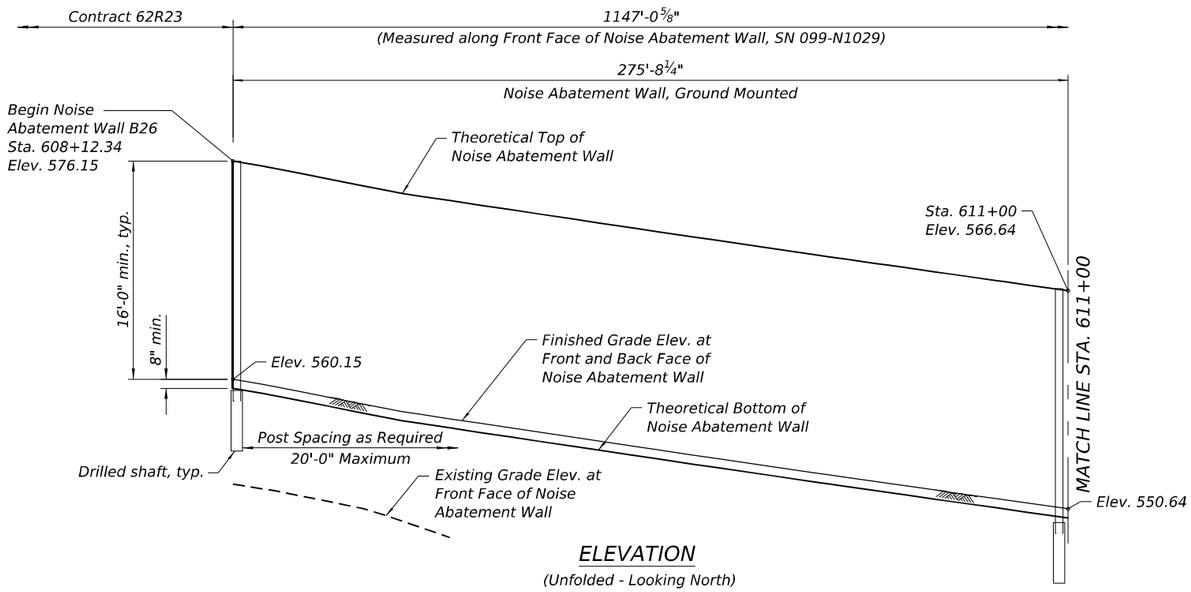

ELEVATION

(Unfolded - Looking North)

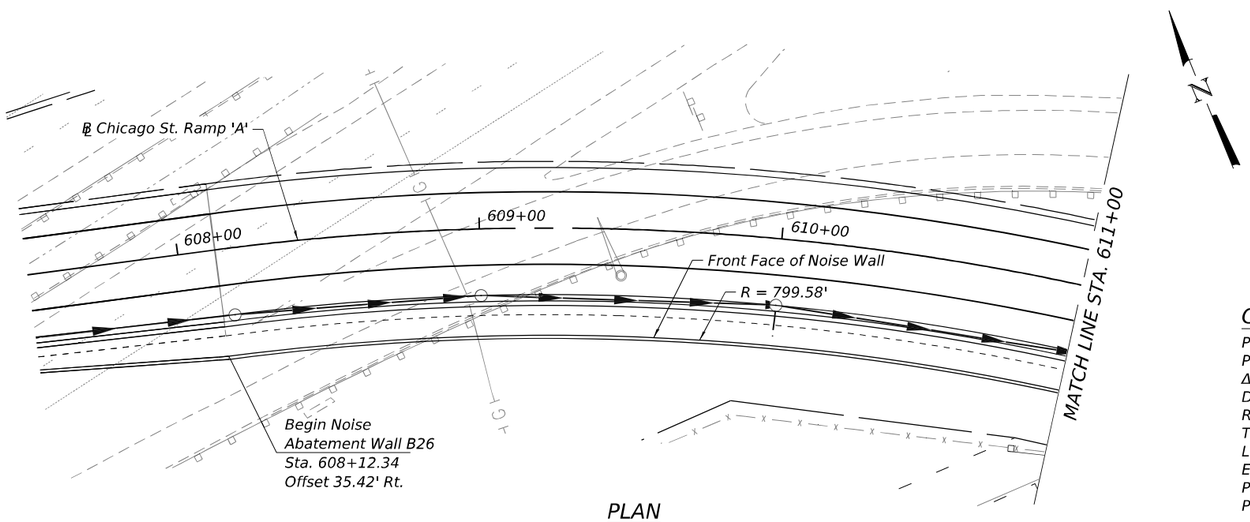

PLAN

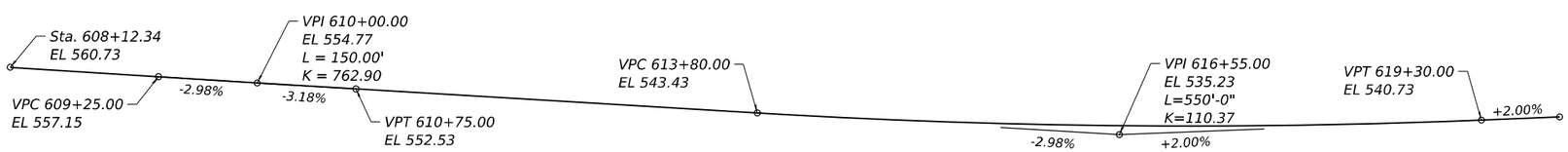

PROFILE GRADE

(Along ℄ Proposed Chicago St. Ramp 'A')

INDEX OF SHEETS

DESIGN SPECIFICATIONS

2020 AASHTO LRFD Bridge Design Specifications, 9th Edition

DESIGN STRESSES

FIELD UNITS

f'c = 4,000 psi
fy = 60,000 psi (Reinforcement)
fy = 50,000 psi (Struct. Steel, M270 Grade 50, posts)
fy = 36,000 psi (Struct. Steel, M270 Grade 36, all other structural steel)

PRECAST UNITS

f'c = 4,500 psi
fy = 60,000 psi (Reinforcement)
fy = 65,000 psi (Welded Wire Reinforcement)

DESIGN LOADS

Strength III or V Wind : 35 psf
Service I Wind : 15 psf
Unfactored Design Active Earth Pressure:
55 pcf equivalent fluid pressure
Minimum Live load Surcharge Pressure:
2 ft. additional earth pressure

LEGEND

- Proposed ROW line
- Proposed Electric line
- Proposed Storm Sewer
- Existing ROW line
- Existing Telephone line
- Existing Aerial line
- Existing Electric line
- Existing Fiber Optic line
- Existing Gas line
- Existing Sanitary Sewer
- Existing Storm Sewer
- Existing Water main
- Existing Cable TV line
- Soil Boring location

STATE OF ILLINOIS
PATRICK J. LAUX
081-007655
CHICAGO, ILLINOIS
LICENSED STRUCTURAL ENGINEER

10/31/2025

Patrick J. Laux, P.E., S.E.
State of Illinois Lic. No. 081-007655
License Expires 11-30-2026.
This stamp applies to sheets SM-01 thru SM-07

CURVE DATA

PR CURVE RAMP A
PI STA = 609+86.44
Δ = 23°33'18" (RT)
D = 06°51'42"
R = 835.00'
T = 174.10'
L = 343.28
E = 17.96'
PC STA = 608+12.34
PT STA = 611+55.62

Range 10E, 3 P.M.

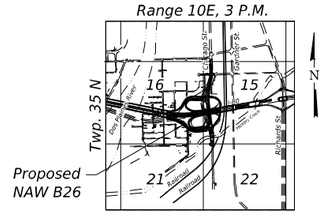

LOCATION SKETCH

NOTES:

1. For General Notes and Total Bill of Material, see Sheet SM-04.
2. Stations are measured along and Offsets are measured from Front Face of Noise Abatement Wall to ℄ Prop. Chicago St. Ramp 'A'.
3. Length of ground mounted wall and structure mounted wall is measured along Front Face of Noise Abatement Wall.

GENERAL PLAN AND ELEVATION 1
NOISE ABATEMENT WALL B26 ALONG CHICAGO ST. RAMP A
F.A.I. RTE. 80 - SEC. 2017-057F
WILL COUNTY
STA. 608+12.34 TO STA. 619+47.92
STRUCTURE NO. 099-N1029

WSP USA Inc.
30 N. LASALLE STREET
SUITE 4200
CHICAGO, IL 60602
TEL: (312) 782-8150
FAX: (312) 782-1684

USER NAME = USGM717780	DESIGNED - MIS	REVISED -	
	CHECKED - PJL	REVISED -	
PLOT SCALE = 50.000 ' / in.	DRAWN - GM	REVISED -	
PLOT DATE = 12/2/2025	CHECKED - MIS	REVISED -	

STATE OF ILLINOIS
DEPARTMENT OF TRANSPORTATION

SHEET SM-01 OF SM-07 SHEETS

F.A.I RTE.	SECTION	COUNTY	TOTAL SHEETS	SHEET NO.
80	2017-057F	WILL	1342	986
		CONTRACT NO. 62F94		
		ILLINOIS	FED. AID PROJECT	

MODEL: Default
FILE NAME: D162F94-GPE_B26-01.dgn

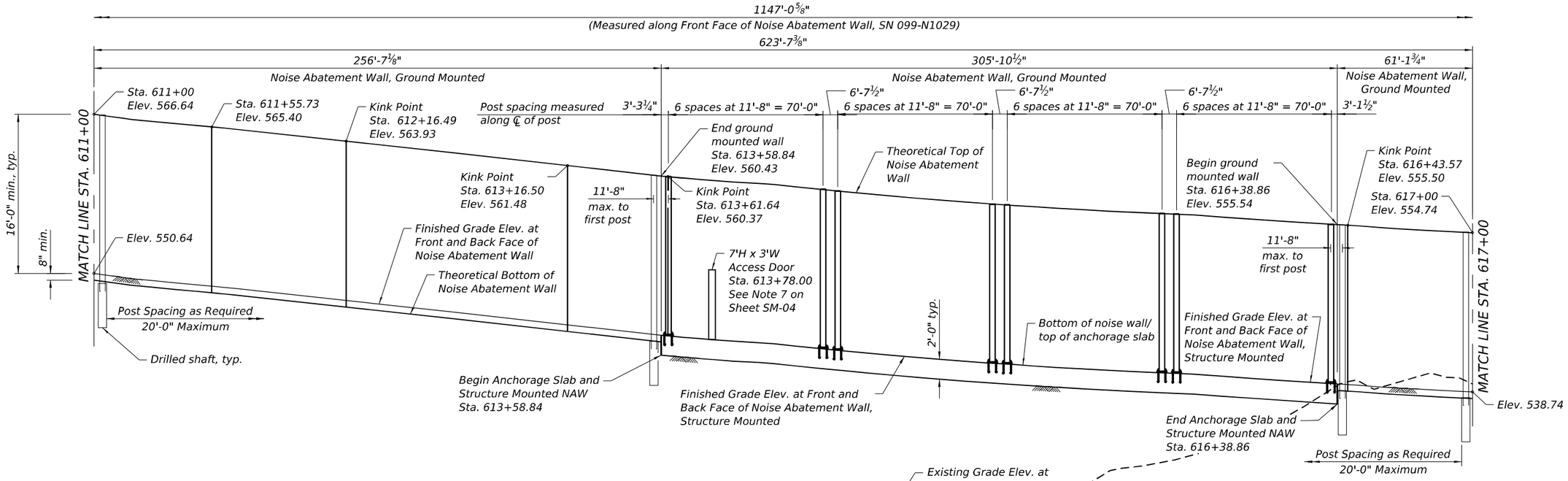

ELEVATION

(Unfolded - Looking North)

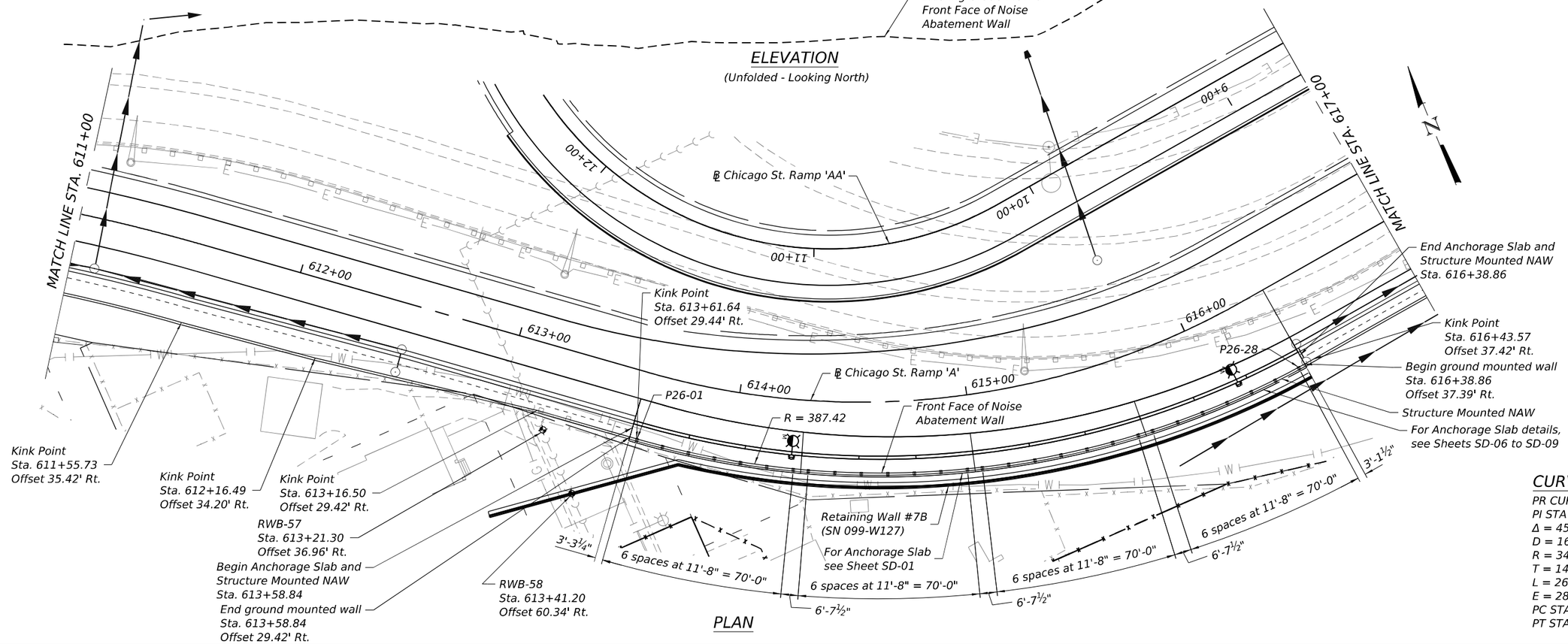

PLAN

CURVE DATA

PR CURVE RAMP A
PI STA = 615+00.77
Δ = 45°29'03" (LT)
D = 16°51'06"
R = 340.00'
T = 142.52'
L = 269.91'
E = 28.66'
PC STA = 613+58.25
PT STA = 616+28.16

MODEL: Default
FILE NAME: D162F94-GPE B26-02.dgn

WSP USA Inc.
30 N. LASALLE STREET
SUITE 4200
CHICAGO, IL 60602
TEL: (312) 782-8150
FAX: (312) 782-1684

USER NAME = USGM717780	DESIGNED - MIS	REVISED -	
	CHECKED - PJL	REVISED -	
PLOT SCALE = 50.000 ' / in.	DRAWN - GM	REVISED -	
PLOT DATE = 12/2/2025	CHECKED - MIS	REVISED -	

STATE OF ILLINOIS
DEPARTMENT OF TRANSPORTATION

GENERAL PLAN AND ELEVATION 2
NOISE ABATEMENT WALL B26 - STRUCTURE NO. 099-N1029

SHEET SM-02 OF SM-07 SHEETS

F.A.I RTE.	SECTION	COUNTY	TOTAL SHEETS	SHEET NO.
80	2017-057F	WILL	1342	987
		CONTRACT NO. 62F94		
	ILLINOIS	FED. AID PROJECT		

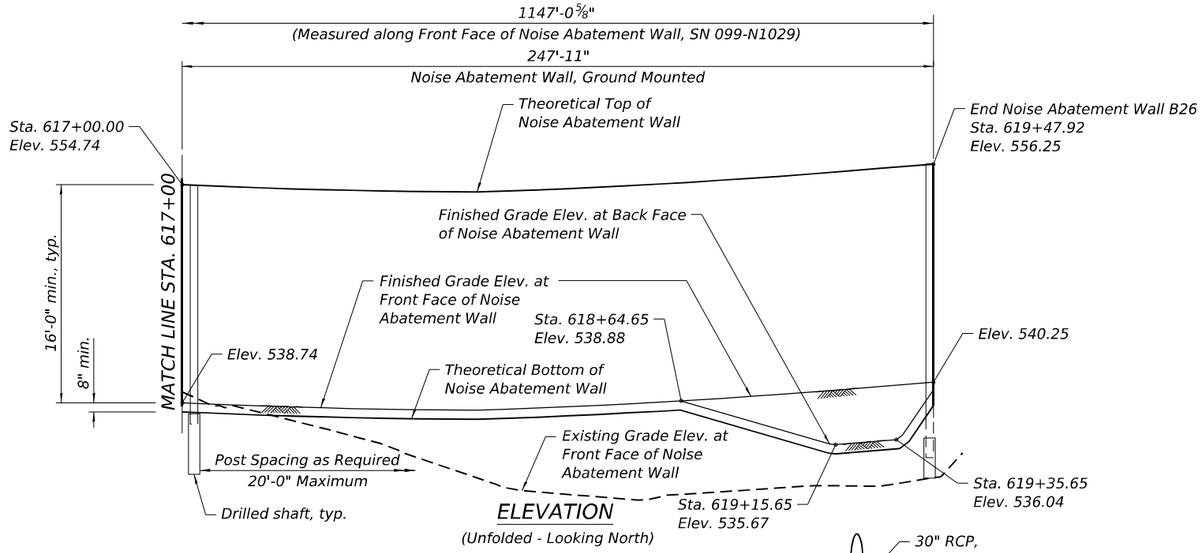

ELEVATION

(Unfolded - Looking North)

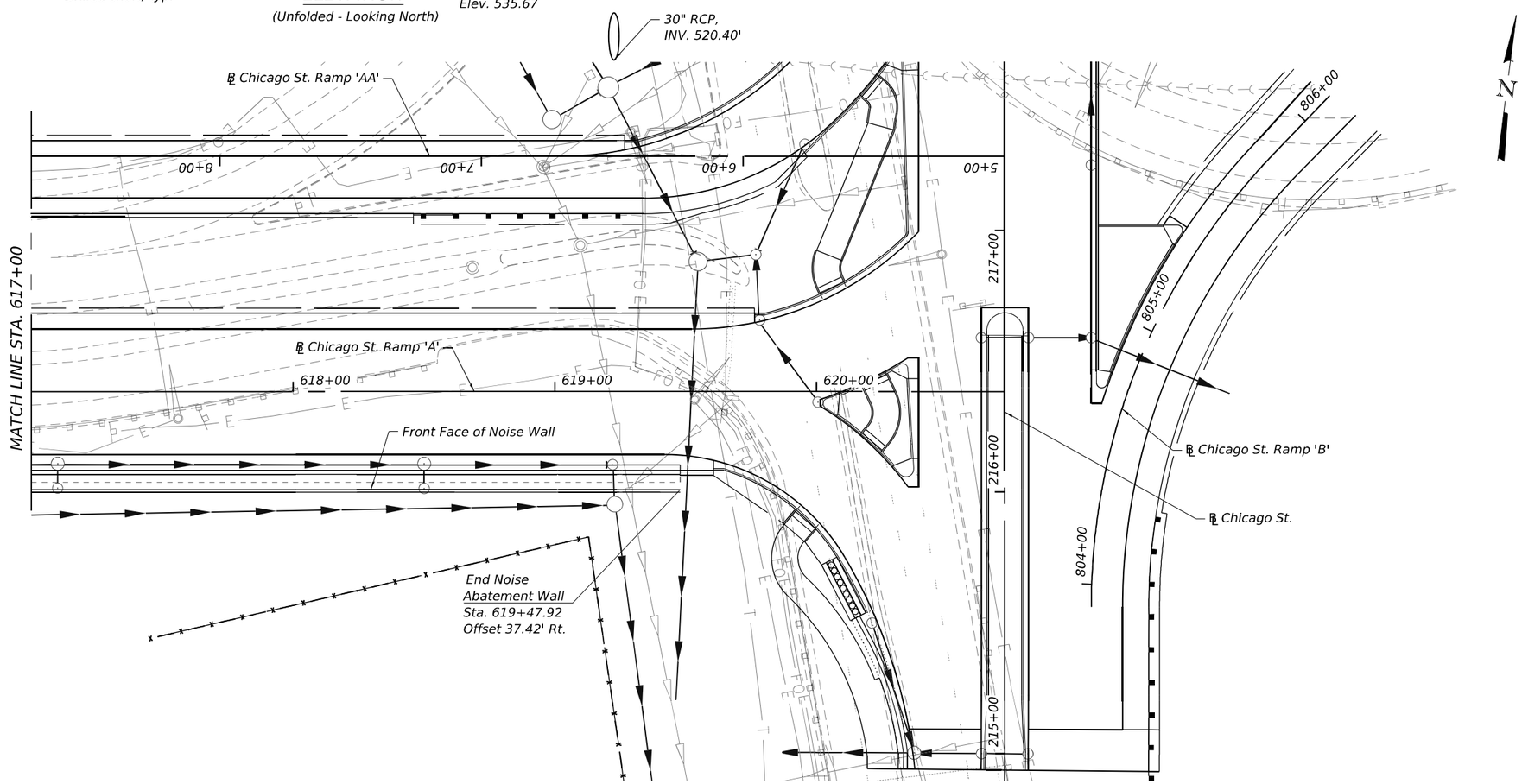

PLAN

MODEL: Default
FILE NAME: D162F94-GPE_B26-03.dgn

WSP USA Inc.
30 N. LASALLE STREET
SUITE 4200
CHICAGO, IL 60602
TEL: (312) 782-8150
FAX: (312) 782-1684

USER NAME = USGM717780	DESIGNED - MIS	REVISED -	
	CHECKED - PJL	REVISED -	
PLOT SCALE = 50:0 ':" / in.	DRAWN - GM	REVISED -	
PLOT DATE = 12/2/2025	CHECKED - MIS	REVISED -	

STATE OF ILLINOIS
DEPARTMENT OF TRANSPORTATION

GENERAL PLAN AND ELEVATION 3
NOISE ABATEMENT WALL B26 - STRUCTURE NO. 099-N1029

SHEET SM-03 OF SM-07 SHEETS

F.A.I RTE.	SECTION	COUNTY	TOTAL SHEETS	SHEET NO.
80	2017-057F	WILL	1342	988
		CONTRACT NO. 62F94		
	ILLINOIS	FED. AID PROJECT		

GENERAL NOTES:

1. Theoretical Top of Wall Elev., Theoretical Bottom of Wall Elev., Finished Grade Elev. at Front Face of Wall and Finished Grade Elev. at Back Face of Wall shall be taken as straight lines in the segments between the stations shown in the Noise Wall Data Table.
2. See Noise Abatement Wall, Ground Mounted and Noise Abatement Wall, Structure Mounted Special Provision for material, design, fabrication, construction, erection and other requirements for installation of proposed Noise Abatement Wall.
3. The existing utilities will be adjusted. The Contractor shall field verify location of the existing utilities prior to construction. The Contractor shall take precautions not to damage existing utilities. Any such damage shall be repaired by the Contractor at no additional cost.
4. Noise Abatement Wall drilled shaft foundation diameter, depth and spacing to be determined by the Contractor. See Noise Abatement Wall, Ground Mounted Special Provision to design NAW foundation on fill where soil boring data is not available but the spacing shall not exceed 20 ft.
5. Contractor shall provide Ashlar Stone Finish on both faces of Noise Abatement Wall.
6. The default color of both sides of the NAW panels, posts and other visible elements shall be Federal Standard 30279 - Sand.
7. Access door location shown in the plans is approximate and may be adjusted to accommodate final fire hydrant locations provided by the City of Joliet. This work shall be included as part of the respective Noise Abatement Wall costs.

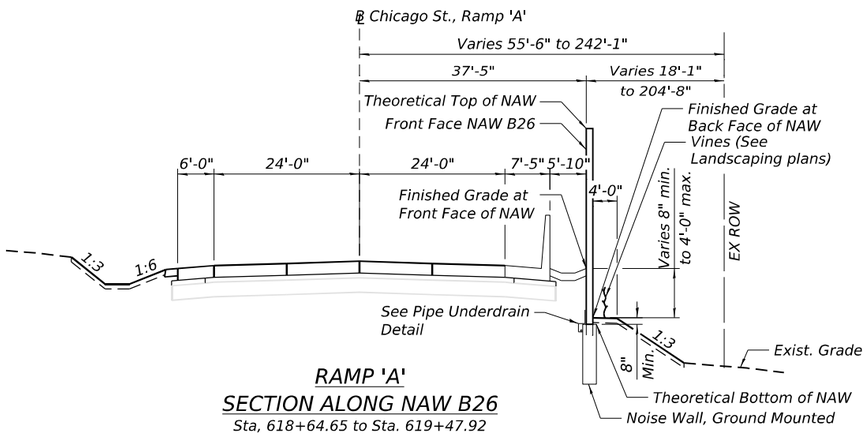

RAMP 'A' SECTION ALONG NAW B26

Sta, 618+64.65 to Sta. 619+47.92

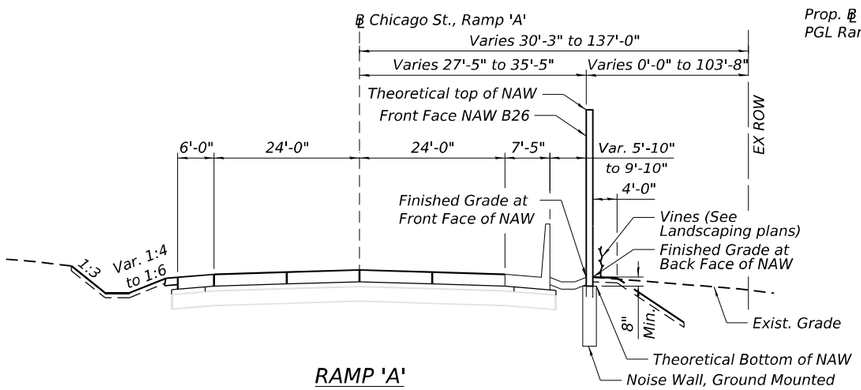

RAMP 'A' SECTION ALONG NAW B26

Sta, 608+12.34 to Sta. 613+58.84
Sta, 616+38.86 to Sta. 618+64.65

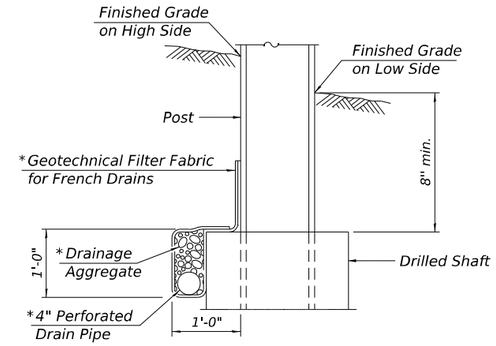

PIPE UNDERDRAIN DETAIL AT DRILLED SHAFTS

*Included in the cost of Pipe Underdrains for Structures 4"

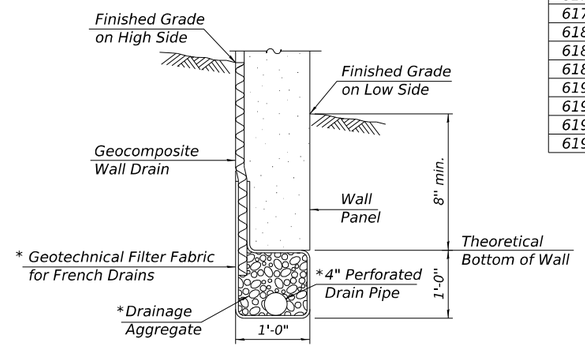

PIPE UNDERDRAIN DETAIL BETWEEN DRILLED SHAFTS

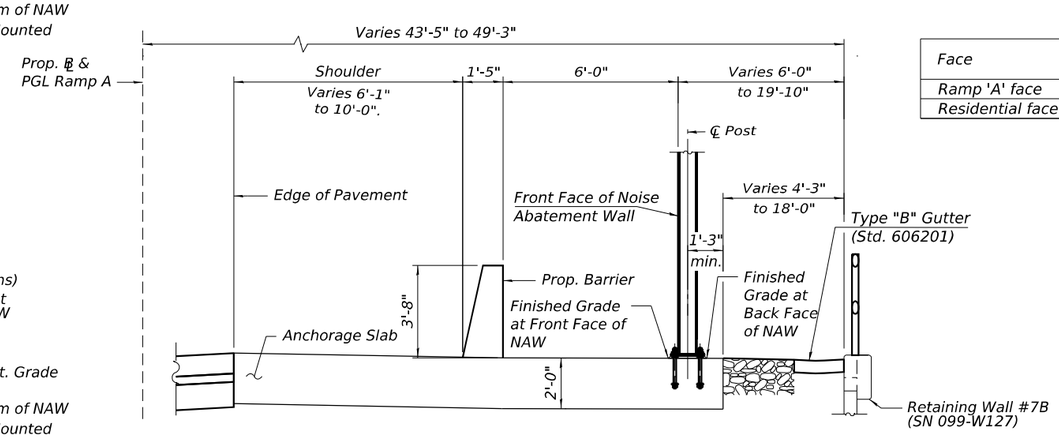

NOISE WALL, STRUCTURE MOUNTED

Sta, 613+58.84 to Sta. 616+38.86

NOISE ABATEMENT WALL B26 (DATA TABLE 1)

Station	Offset (Rt) to Front Face of NAW (ft.)	Theoretical top of NAW Elev.	℄ Chicago St. Ramp 'A' Elev.	Finished Grade Elev. at Front Face of NAW	Finished Grade Elev. At Back Face of NAW	Ex. Grade Elev. At Front Face of NAW	Theoretical Bottom of NAW Elev.	Theoretical Wall Height (ft)	Final Retained Height (ft)
608+12.34	35.42	576.15	560.73	560.15	560.15	553.12	559.48	16.67	-
608+50.00	35.42	574.63	559.54	558.63	558.63	551.64	557.96	16.67	-
609+00.00	35.42	572.84	557.95	556.84	556.84	547.32	556.17	16.67	-
609+50.00	35.42	571.25	556.36	555.25	555.25	537.61	554.58	16.67	-
610+00.00	35.42	569.68	554.80	553.68	553.68	529.57	553.01	16.67	-
610+50.00	35.42	568.15	553.28	552.15	552.15	526.13	551.48	16.67	-
611+00.00	35.42	566.64	551.78	550.64	550.64	525.98	549.97	16.67	-
611+55.73	35.42	565.40	550.13	549.40	549.40	527.20	548.73	16.67	-
612+16.49	34.20	563.93	548.31	547.93	547.93	528.32	547.26	16.67	-
612+50.00	32.60	563.12	547.31	547.12	547.12	528.12	546.45	16.67	-
613+16.50	29.42	561.48	545.32	545.48	545.48	526.45	544.81	16.67	-
613+61.64	29.44	560.37	543.97	544.37	544.37	525.81	543.37	16.00	-
614+00.00	29.96	559.67	542.85	543.67	543.67	526.12	543.67	16.00	-
614+50.00	30.95	558.53	541.56	542.53	542.53	526.71	542.53	16.00	-
615+00.00	32.30	557.55	540.50	541.55	541.55	526.56	541.55	16.00	-
615+50.00	33.96	556.83	539.67	540.83	540.83	531.12	540.83	16.00	-
616+00.00	35.90	556.15	539.06	540.15	540.15	534.10	540.15	16.00	-
616+43.57	37.42	555.50	538.71	539.50	539.50	539.74	538.83	16.67	-
617+00.00	37.42	554.74	538.52	538.74	538.74	539.54	538.07	16.67	-
617+50.00	37.42	554.35	538.59	538.35	538.35	536.65	537.68	16.67	-
618+00.00	37.42	554.20	538.89	538.20	538.20	533.01	537.53	16.67	-
618+50.00	37.42	554.70	539.42	538.70	538.70	531.60	538.03	16.67	-
618+64.65	37.42	554.88	539.62	538.88	538.88	532.03	538.21	16.67	-
619+00.00	37.42	555.40	540.17	539.40	536.60	532.51	535.93	19.47	2.80
619+15.65	37.42	555.67	540.45	539.67	535.67	532.67	535.00	20.67	4.00
619+35.65	37.42	556.04	540.84	540.04	536.04	532.81	535.46	20.67	4.00
619+47.92	37.42	556.25	541.08	540.25	540.25	533.27	539.58	16.67	-

UTILITY CROSSING TABLE

Utility	Station	Offset	Elev.	Comments
Exist. Underground Gasline	608+98.35	35.42 Rt.	-	-
Exist. Underground Water Line	612+08.37	34.36 Rt.	-	-
Exist. Underground Water Line	613+02.10	30.11 Rt.	-	-
Exist. Underground Gasline	613+05.19	29.96 Rt.	-	-
Exist. Underground Sanitary Sewer	613+14.25	29.53 Rt.	-	-
Exist. Underground Water Line	613+50.70	29.53 Rt.	-	-
Exist. Underground Water Line	614+01.55	29.98 Rt.	-	-
Prop. Underground Storm Sewer	619+22.62	37.42 Rt.	520.40	-
Exist. Underground Storm Sewer	619+29.35	37.42 Rt.	-	-

NOISE REDUCTION DATA

Face	From Sta.	To Sta.	Noise Reduction Coefficient	Comments
Ramp 'A' face	608+12.34	619+47.92	Reflective	-
Residential face	608+12.34	619+47.92	Reflective	-

TOTAL BILL OF MATERIAL

ITEM	UNIT	TOTAL
Noise Abatement Wall, Ground Mounted	Sq. Ft.	14,196
Noise Abatement Wall, Structure Mounted	Sq. Ft.	4,894
Geocomposite Wall Drain	Sq. Yd.	42
Pipe Underdrains for Structures 4"	Foot	84

WSP USA Inc.
30 N. LASALLE STREET
SUITE 4200
CHICAGO, IL 60602
TEL: (312) 782-8150
FAX: (312) 782-1684

USER NAME = USGM717780	DESIGNED - MIS	REVISED -	
	CHECKED - PJL	REVISED -	
PLOT SCALE = 50.000 ' / in.	DRAWN - GM	REVISED -	
PLOT DATE = 12/2/2025	CHECKED - MIS	REVISED -	

STATE OF ILLINOIS
DEPARTMENT OF TRANSPORTATION

GENERAL NOTES AND TOTAL BILL OF MATERIAL
NOISE ABATEMENT WALL B26 - STRUCTURE NO. 099-N1029

SHEET SM-04 OF SM-07 SHEETS

F.A.I RTE.	SECTION	COUNTY	TOTAL SHEETS	SHEET NO.
80	2017-057F	WILL	1342	989

CONTRACT NO. 62F94

ILLINOIS | FED. AID PROJECT

MODEL: Default
FILE NAME: D162F94-DET-B26-04.dgn

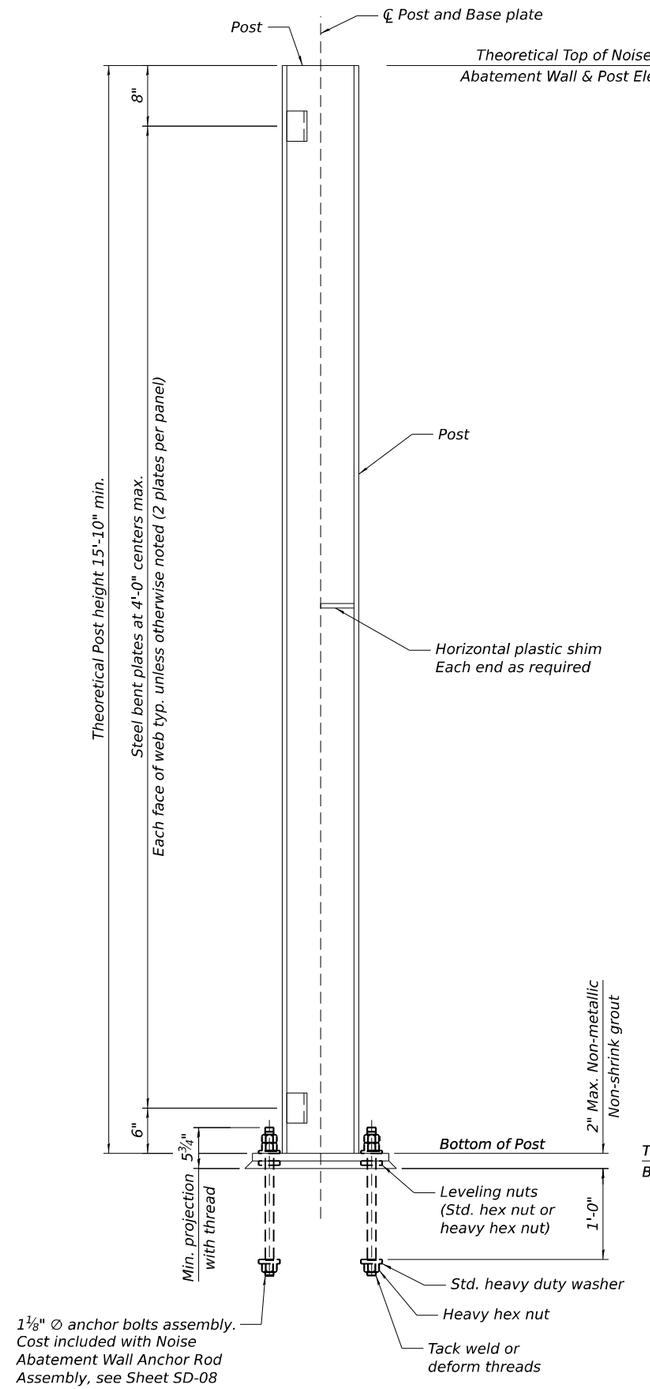

SIDE VIEW

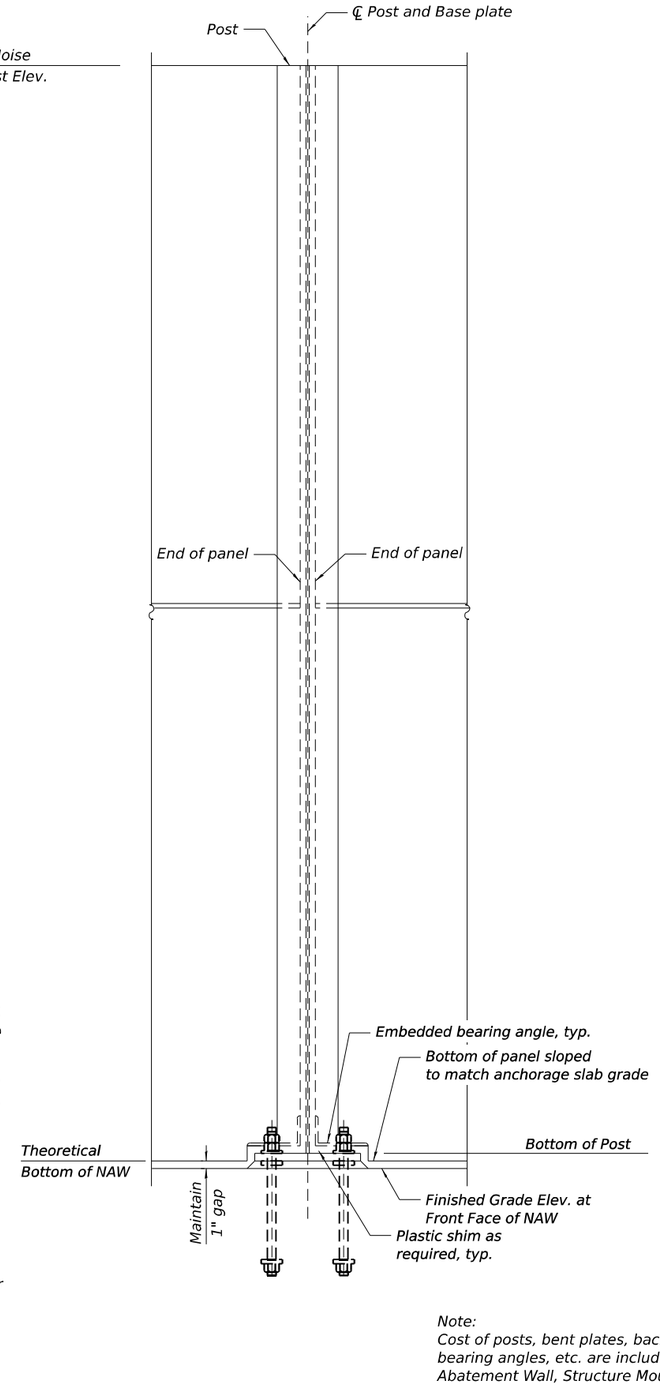

FRONT VIEW

Note:
Cost of posts, bent plates, backer rod, bearing angles, etc. are included in Noise Abatement Wall, Structure Mounted.

NOISE ABATEMENT WALL, STRUCTURE MOUNTED B26 (DATA TABLE 2)

Post	Station	Offset to Centerline of Post* (ft)	Theoretical top of NAW Elev.	Chicago St. Ramp "A" PGL Elev.	Finished Grade Elev. at Front Face of NAW	Theoretical Bottom of NAW Elev.	Theoretical Post Height (ft)	Theoretical Wall Height (ft)
P26-01	613+61.84	29.94	560.37	543.97	544.37	543.45	15.83	16
P26-02	613+72.57	30.06	560.14	543.65	544.14	543.22	15.83	16
P26-03	613+83.28	30.20	559.93	543.33	543.93	543.01	15.83	16
P26-04	613+93.99	30.36	559.78	543.02	543.78	542.86	15.83	16
P26-05	614+04.70	30.54	559.59	542.72	543.59	542.67	15.83	16
P26-06	614+15.40	30.73	559.33	542.43	543.33	542.41	15.83	16
P26-07	614+26.10	30.94	559.07	542.15	543.07	542.15	15.83	16
P26-08	614+32.17	31.06	558.92	542.00	542.92	542.00	15.83	16
P26-09	614+42.85	31.29	558.68	541.73	542.68	541.76	15.83	16
P26-10	614+53.53	31.54	558.44	541.48	542.44	541.52	15.83	16
P26-11	614+64.20	31.81	558.22	541.24	542.22	541.30	15.83	16
P26-12	614+74.86	32.08	558.01	541.01	542.01	541.09	15.83	16
P26-13	614+85.52	32.38	557.81	540.79	541.81	540.89	15.83	16
P26-14	614+96.16	32.69	557.62	540.58	541.62	540.70	15.83	16
P26-15	615+02.20	32.87	557.52	540.46	541.52	540.60	15.83	16
P26-16	615+12.83	33.20	557.34	540.27	541.34	540.42	15.83	16
P26-17	615+23.45	33.54	557.18	540.08	541.18	540.26	15.83	16
P26-18	615+34.06	33.90	557.03	539.89	541.03	540.11	15.83	16
P26-19	615+44.66	34.27	556.90	539.75	540.90	539.98	15.83	16
P26-20	615+55.25	34.65	556.77	539.59	540.77	539.85	15.83	16
P26-21	615+65.82	35.05	556.65	539.45	540.65	539.73	15.83	16
P26-22	615+71.82	35.28	556.59	539.37	540.59	539.67	15.83	16
P26-23	615+82.38	35.69	556.46	539.25	540.46	539.54	15.83	16
P26-24	615+92.92	36.11	556.27	539.13	540.27	539.35	15.83	16
P26-25	616+03.46	36.55	556.08	539.03	540.08	539.16	15.83	16
P26-26	616+13.98	36.99	555.91	538.93	539.91	538.99	15.83	16
P26-27	616+24.48	37.45	555.74	538.84	539.74	538.82	15.83	16
P26-28	616+35.74	37.84	555.58	538.76	539.58	538.66	15.83	16

*Offsets are taken from ℄ Chicago St. Ramp A

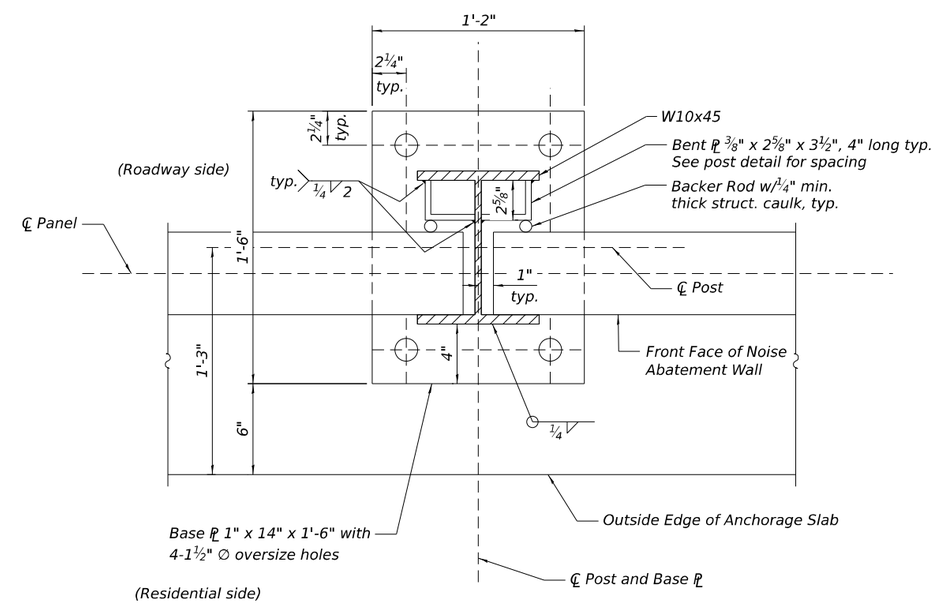

BASE PLATE AND POST DETAIL

MODEL: Default
FILE NAME: D162F94-DET-B26-05.dgn

WSP USA Inc.
30 N. LASALLE STREET
SUITE 4200
CHICAGO, IL 60602
TEL: (312) 782-8150
FAX: (312) 782-1684

USER NAME = USGM717780	DESIGNED - MIS	REVISED -	
	CHECKED - PJL	REVISED -	
PLOT SCALE = 3.333 ' / in.	DRAWN - GM	REVISED -	
PLOT DATE = 12/2/2025	CHECKED - MIS	REVISED -	

STATE OF ILLINOIS
DEPARTMENT OF TRANSPORTATION

WALL DETAILS 1
NOISE ABATEMENT WALL B26 - STRUCTURE NO. 099-N1029
SHEET SM-05 OF SM-07 SHEETS

F.A.I RTE.	SECTION	COUNTY	TOTAL SHEETS	SHEET NO.
80	2017-057F	WILL	1342	990
		CONTRACT NO. 62F94		
		ILLINOIS	FED. AID PROJECT	

Notes:
Each side of the noise wall panels shall have a rolled ashlar stone finish. The finish shall have a 1 ½" relief for noise abatement wall, ground mounted and a 3/4" relief for noise abatement wall, structure mounted. The color of both sides of the panels, plain band, posts and all other visible elements shall follow the special provisions.

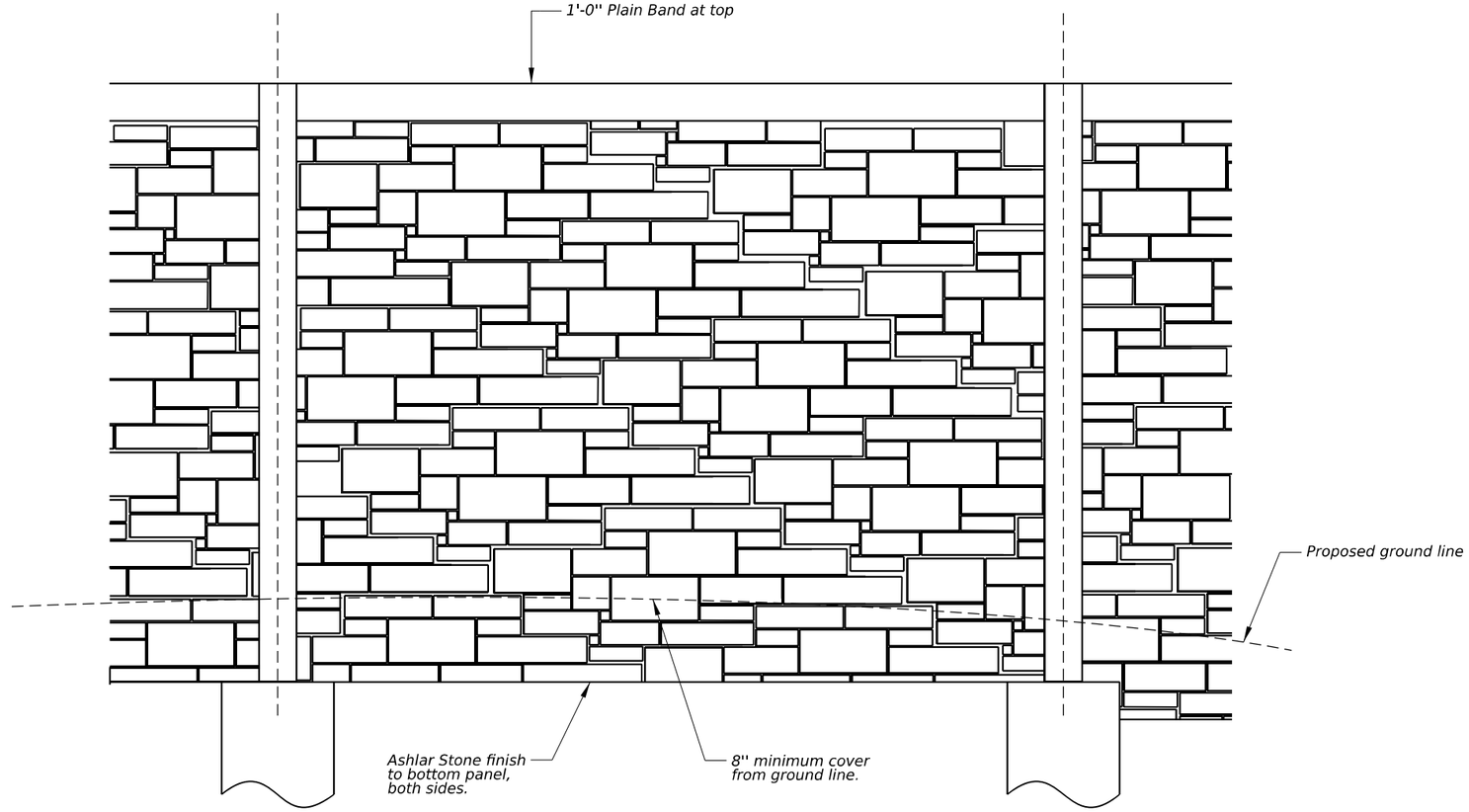

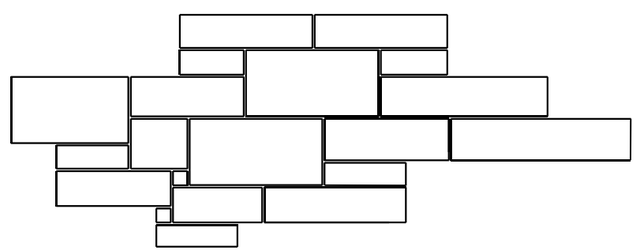

Stone Pattern Sizes:
3" x 3" - 14" x 28"

ENLARGED PATTERN DETAIL

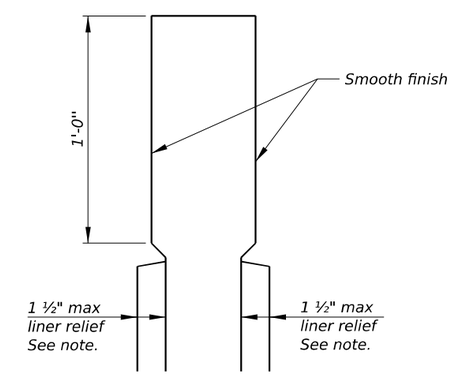

ENLARGED CAP DETAIL

MODEL: NOISE WALLS DETAILS
FILE NAME: D162F94-DET_B26-06.dgn

WSP USA Inc.
30 N. LASALLE STREET
SUITE 4200
CHICAGO, IL 60602
TEL: (312) 782-8150
FAX: (312) 782-1684

USER NAME = USGM717780	DESIGNED - MIS	REVISED -	
	CHECKED - PJL	REVISED -	
PLOT SCALE = 0.16666667 ' / in.	DRAWN - GM	REVISED -	
PLOT DATE = 12/2/2025	CHECKED - MIS	REVISED -	

STATE OF ILLINOIS
DEPARTMENT OF TRANSPORTATION

WALL DETAILS 2
NOISE ABATEMENT WALL B26 - STRUCTURE NO. 099-N1029

SHEET SM-06 OF SM-07 SHEETS

F.A.I RTE.	SECTION	COUNTY	TOTAL SHEETS	SHEET NO.
80	2017-057F	WILL	1342	991
		CONTRACT NO. 62F94		
	ILLINOIS	FED. AID PROJECT		

Illinois Department of Transportation
Division of Highways
GSG Consultants, Inc.

SOIL BORING LOG

Page 1 of 1

Date 10/20/22

ROUTE I-80 DESCRIPTION Retaining Wall No. 7 - Ramp A LOGGED BY AA

SECTION C-91-109-22 LOCATION SEC. 16, TWP. 35 N, RNG. 10 E,
Latitude Longitude

COUNTY Will DRILLING RIG Diedrich D-50 HAMMER TYPE Auto
DRILLING METHOD HSA HAMMER EFF (%) 95.5

STRUCT. NO. 099-W127
Station

BORING NO. RWB-57
Station 613+21.30
Offset 30.90ft RT
Ground Surface Elev. 525.80 ft

Surface Water Elev. 17.00 ft
Stream Bed Elev. N/A ft

Groundwater Elev.:
First Encounter Dry ft
Upon Completion N/A ft
After ___ Hrs. N/A ft

Description	Elev.	DEPTH (ft)	BLOWS (/6")	UCS Qu (tsf)	MOIST (%)
4 inches of Asphalt	525.47				
8 inches of Aggregate Subbase	524.80				
Loose to Medium Dense Brown, Moist SAND, with gravel, trace clay seams (SPG)			28		
			14		6
			10		
			4		
			6		10
		-5	9		
			5		
			6		11
			8		
			5		
Cobbles at 9 feet			7		9
		-10	8		
			4		
			3		10
			4		
	512.30				
Medium Dense Brown, Moist CLAYEY GRAVEL (GC)			4		
			6		10
		-15	7		
	509.80				
Soft Gray, Very Moist SILTY CLAY, trace gravel (CL/ML)			2		
			2	0.4	38
			3	P	
	507.30				
Medium Dense to Very Dense Gray, Moist GRAVEL, trace clay seams (GP)			14		
			23		14
		-20	5		
Medium Dense to Very Dense Gray, Moist GRAVEL, trace clay seams (GP) *(continued)*	504.30				
WEATHERED LIMESTONE	503.80		50/2"		9
Auger refusal at 22.0 feet End of Boring					

The Unconfined Compressive Strength (UCS) Failure Mode is indicated by (B-Bulge, S-Shear, P-Penetrometer)
The SPT (N value) is the sum of the last two blow values in each sampling zone (AASHTO T206)

BBS, form 137 (Rev. 8-99)

Illinois Department of Transportation
Division of Highways
GSG Consultants, Inc.

SOIL BORING LOG

Page 1 of 1

Date 10/28/22

ROUTE I-80 DESCRIPTION Retaining Wall No. 7 - Ramp A LOGGED BY AA

SECTION C-91-109-22 LOCATION SEC. 16, TWP. 35 N, RNG. 10 E,
Latitude Longitude

COUNTY Will DRILLING RIG Mobile B-57 HAMMER TYPE Auto
DRILLING METHOD HSA HAMMER EFF (%) 89

STRUCT. NO. 099-W127
Station

BORING NO. RWB-58
Station 613+41.20
Offset 60.34ft RT
Ground Surface Elev. 525.45 ft

Surface Water Elev. N/A ft
Stream Bed Elev. N/A ft

Groundwater Elev.:
First Encounter 509.4 ft ▼
Upon Completion N/A ft
After ___ Hrs. N/A ft

Description	Elev.	DEPTH (ft)	BLOWS (/6")	UCS Qu (tsf)	MOIST (%)
4 inches of Asphalt	525.11				
8 inches of Aggregate Subbase	524.45				
Loose to Medium Dense Brown, Moist GRAVEL, with sand and clay seams (GPS)			4		
			11		11
			8		
			2		
			3		13
		-5	4		
			2		
			2		13
			2		
	516.95				
Loose to Very Dense Brown, Moist to Wet CLAYEY GRAVEL, trace sand (GC)			1		
			5		15
		-10	11		
			3		
			2		16
			6		
			8		
			50/3"		16
		-15			
	509.45 ▼				
Loose to Very Dense Gray, Moist to Wet GRAVEL (GP)			50/5"		
					20
			2		
			2		12
	505.45	-20	3		
WEATHERED LIMESTONE	504.45				
Gray LIMESTONE, slightly weathered, slightly fractured					
Run 1: 21' - 26' Recovery: 87% RQD: 45% (Poor)		-25			
	499.45				
Run 2: 26' - 31' Recovery: 100% RQD: 83% (Good)		-30			
	494.45				
End of Boring		-35			
		-40			

The Unconfined Compressive Strength (UCS) Failure Mode is indicated by (B-Bulge, S-Shear, P-Penetrometer)
The SPT (N value) is the sum of the last two blow values in each sampling zone (AASHTO T206)

BBS, form 137 (Rev. 8-99)

MODEL: Default
FILE NAME: D162F94-SBL_B26-07.dgn

WSP USA Inc.
30 N. LASALLE STREET
SUITE 4200
CHICAGO, IL 60602
TEL: (312) 782-8150
FAX: (312) 782-1684

USER NAME = USGM717780	DESIGNED - MIS	REVISED -	
	CHECKED - PJL	REVISED -	
PLOT SCALE = 0.167 ' / in.	DRAWN - GM	REVISED -	
PLOT DATE = 12/2/2025	CHECKED - MIS	REVISED -	

STATE OF ILLINOIS
DEPARTMENT OF TRANSPORTATION

SOIL BORING LOGS
NOISE ABATEMENT WALL B26 - STRUCTURE NO. 099-N1029

SHEET SM-07 OF SM-07 SHEETS

F.A.I RTE.	SECTION	COUNTY	TOTAL SHEETS	SHEET NO.
80	2017-057F	WILL	1342	992

CONTRACT NO. 62F94

ILLINOIS | FED. AID PROJECT

Benchmark: Iron rod with yellow cap at Sta. 722+92.37, 4.19' Rt. ℄ I-80, Elev. 556.54.
Existing Structure: The eastern portion of SN 099-W035 from Sta. 714+20.00 to Sta. 720+43.33 was constructed in 2024 as Project NHPP-6FXA (534), Section 2013-009B. The existing structure is a mechanically stabilized earth retaining wall with precast panels. The wall supports a CIP anchorage slab with a 72" tall barrier. Noise abatement wall SN 099-N1002 will be attached to the existing and proposed barrier as part of this contract. Existing wall is to remain.
Stage Construction will be utilized to maintain traffic.
No Salvage.

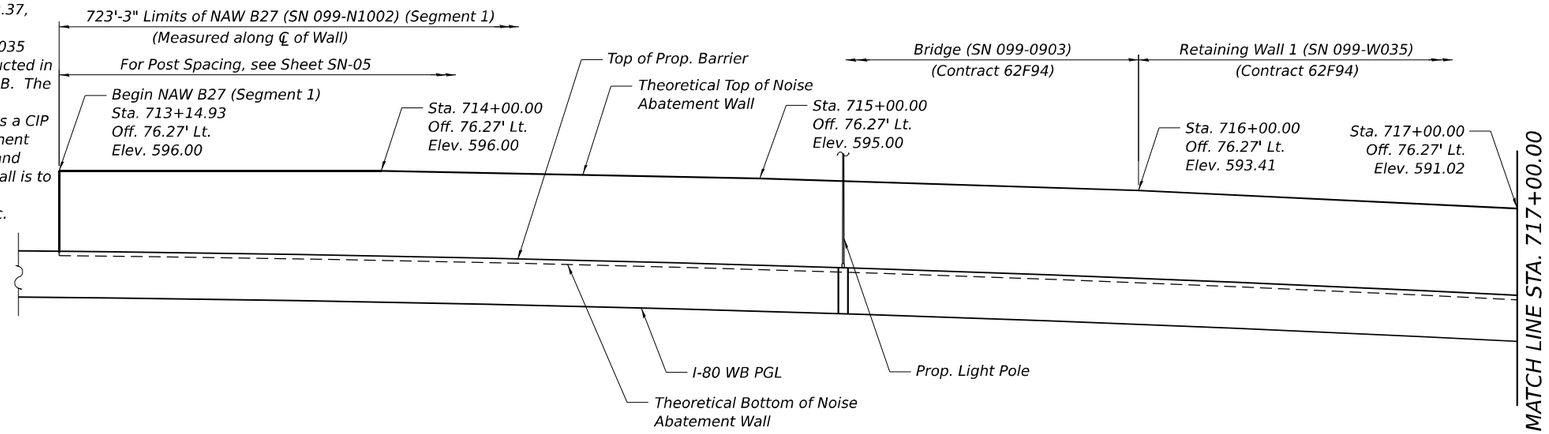

ELEVATION
Segment 1

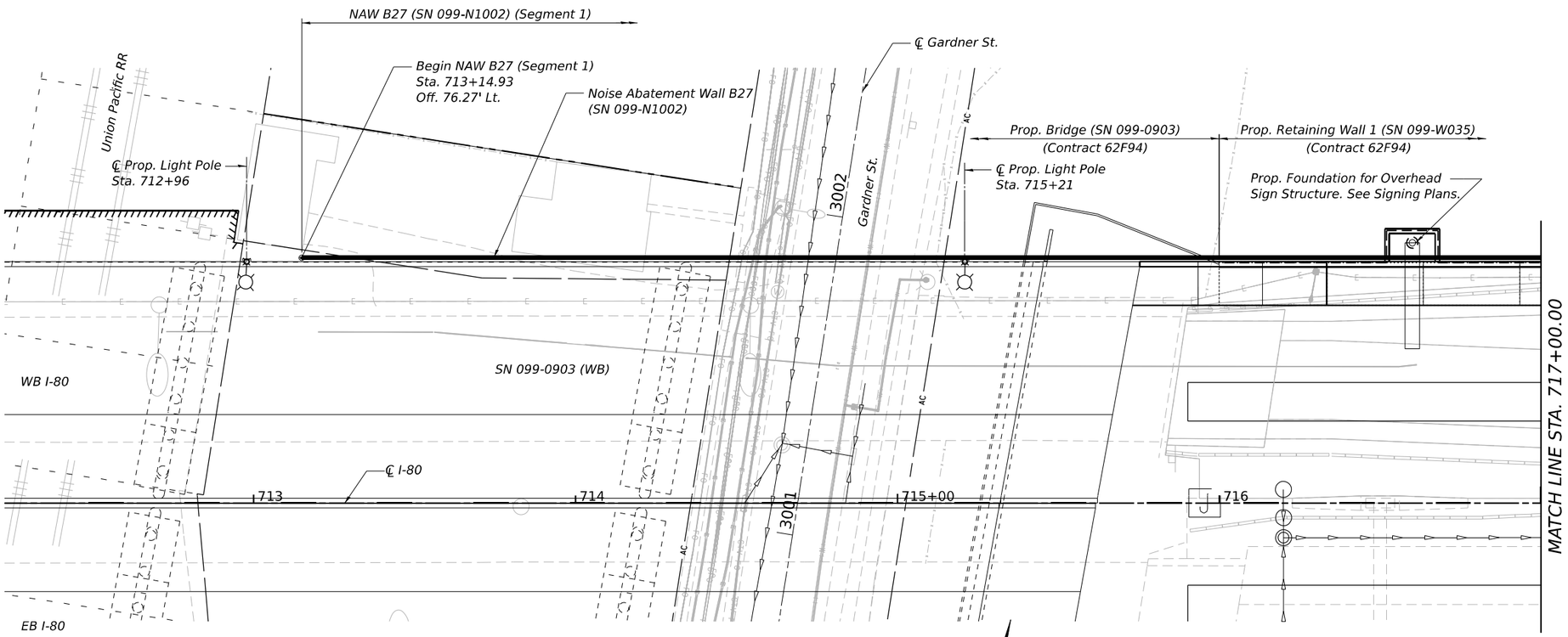

PLAN

EXP
STATE OF ILLINOIS
MAEN A. FARHAT
081.008545
LICENSED STRUCTURAL ENGINEER

DATE SIGNED: 10/31/2025
MAEN A. FARHAT, PHD, P.E., S.E.
NO. 081-008545
EXP. DATE: 11/30/2026

SEAL AND SIGNATURE APPLY TO:
SHEETS 1 - 8

NOTES:

1. Theoretical Top of Wall Elevations and Theoretical Bottom of Wall Elevations shall be taken as straight lines in the segments between the stations shown in Elevation view on this sheet and the Noise Wall Data Table on Sheet SN-05.

2. For additional notes and legend, see Sheet SN-04.

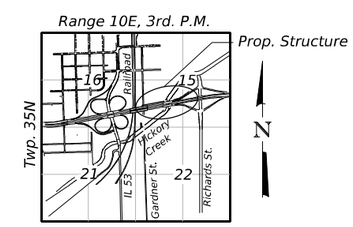

LOCATION SKETCH

GENERAL PLAN AND ELEVATION
NOISE ABATEMENT WALL ALONG I-80
F.A.I. RTE. I-80 SEC. 2017-057F
WILL COUNTY
STA. 713+14.93 TO STA. 728+49.83
SN 099-N1002 (NOISE WALL B27)

MODEL: SHEET
FILE NAME: C:\TRANSYSTEMS\PW_LOCAL\TRANSYSTEMS-PW-01\DMS20791\099N1002-62F94-NAW-001-GPE.DGN
10-27-2025, 16:56:50

USER NAME =	DESIGNED - BAR	REVISED -	
	CHECKED - VCP	REVISED -	
PLOT SCALE =	DRAWN - MTR	REVISED -	
PLOT DATE =	CHECKED - BAR	REVISED -	

STATE OF ILLINOIS
DEPARTMENT OF TRANSPORTATION

GENERAL PLAN AND ELEVATION 1
NOISE ABATEMENT WALL B27 (SN 099-N1002)
SHEET SN-01 OF SN-08 SHEETS

F.A.I. RTE.	SECTION	COUNTY	TOTAL SHEETS	SHEET NO.
80	2017-057F	WILL	1342	993
		CONTRACT NO. 62F94		
		ILLINOIS	FED. AID PROJECT	

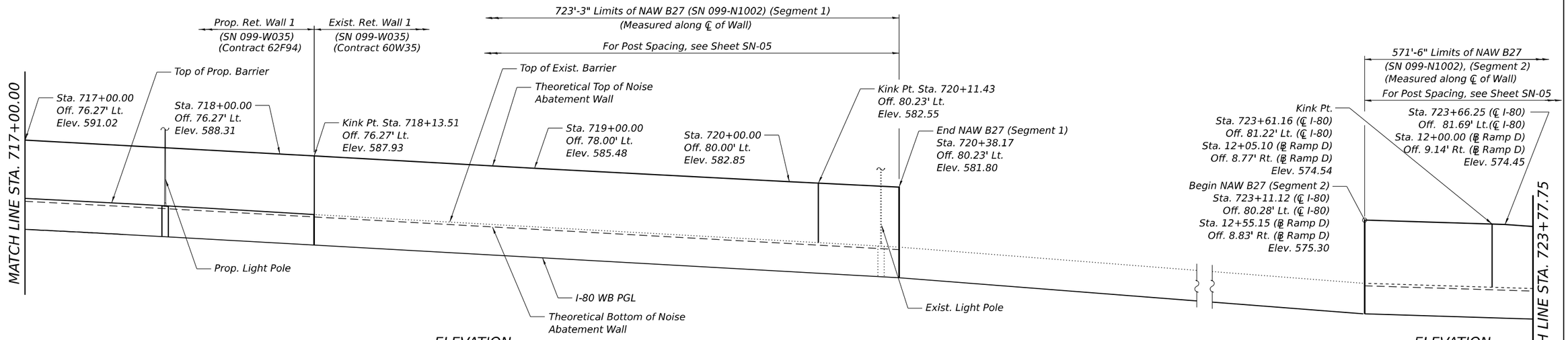

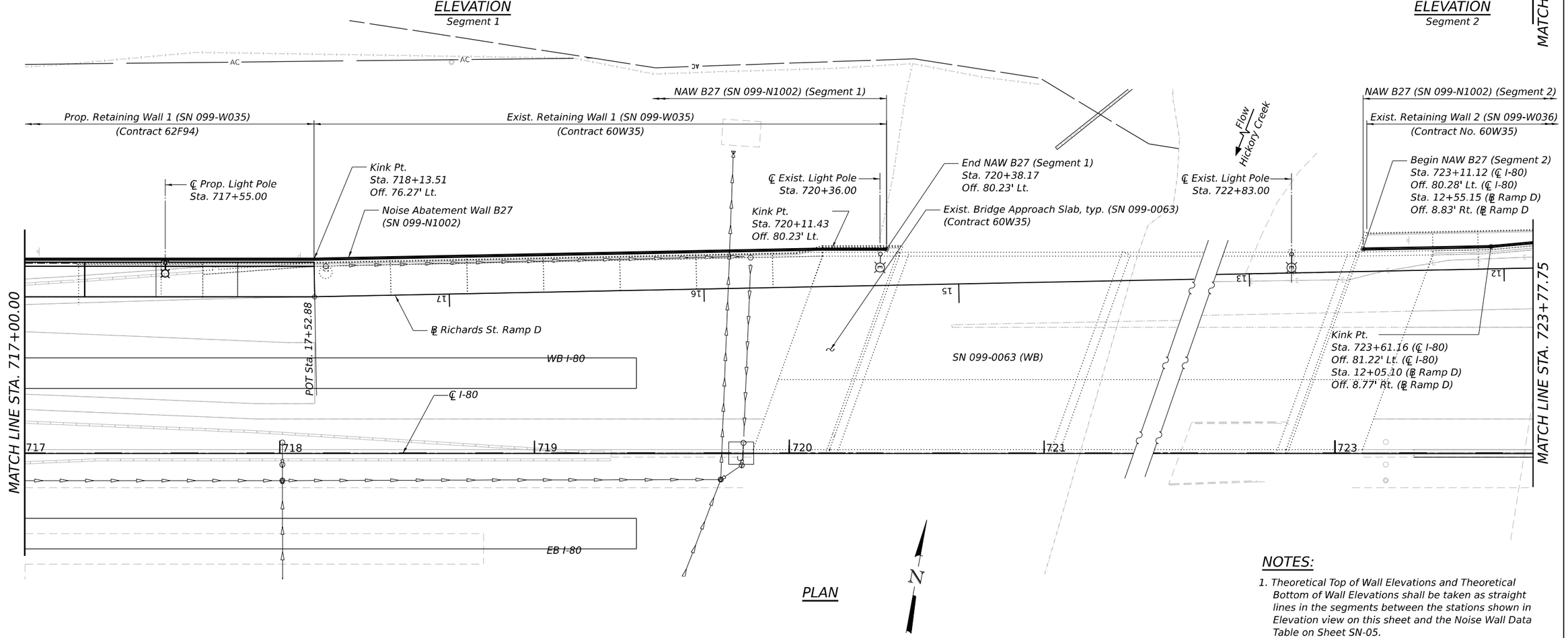

NOTES:

1. Theoretical Top of Wall Elevations and Theoretical Bottom of Wall Elevations shall be taken as straight lines in the segments between the stations shown in Elevation view on this sheet and the Noise Wall Data Table on Sheet SN-05.

2. For additional notes and legend, see Sheet SN-04.

MODEL: SHEET
FILE NAME: C:\TRANSYSTEMS\PW_LOCAL\TRANSYSTEMS-PW-01\DMS20791\099N1002-62F94-NAW-002-GPE.DGN
10-27-2025, 16:56:58

exp.

USER NAME =	DESIGNED - BAR	REVISED -	
	CHECKED - VCP	REVISED -	
PLOT SCALE =	DRAWN - MTR	REVISED -	
PLOT DATE =	CHECKED - BAR	REVISED -	

STATE OF ILLINOIS
DEPARTMENT OF TRANSPORTATION

GENERAL PLAN AND ELEVATION 2
NOISE ABATEMENT WALL B27 (SN 099-N1002)

SHEET SN-02 OF SN-08 SHEETS

F.A.I. RTE.	SECTION	COUNTY	TOTAL SHEETS	SHEET NO.
80	2017-057F	WILL	1342	994
		CONTRACT NO. 62F94		
		ILLINOIS	FED. AID PROJECT	

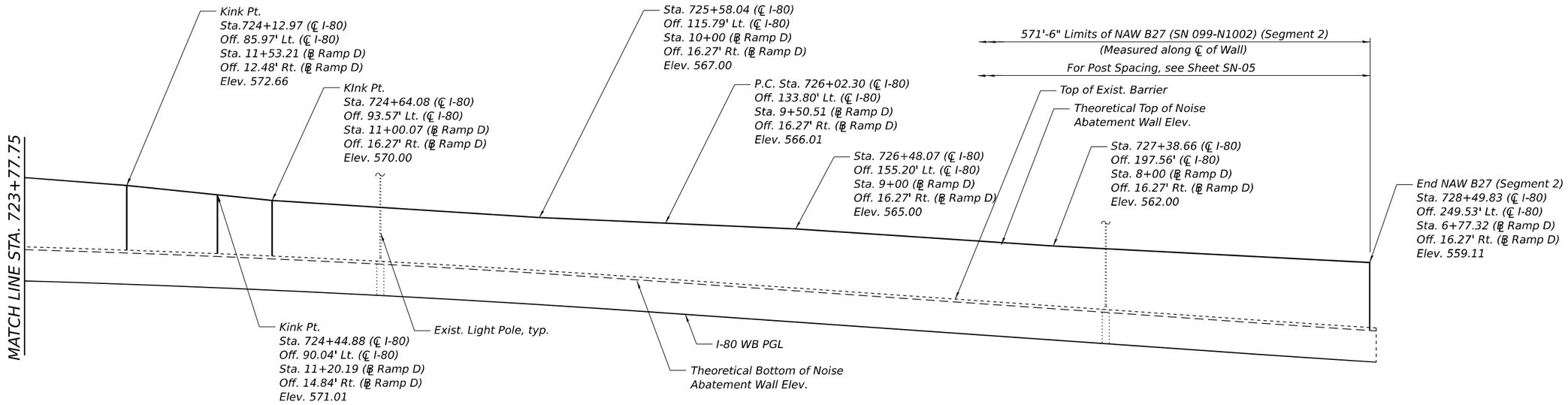

ELEVATION
Segment 2

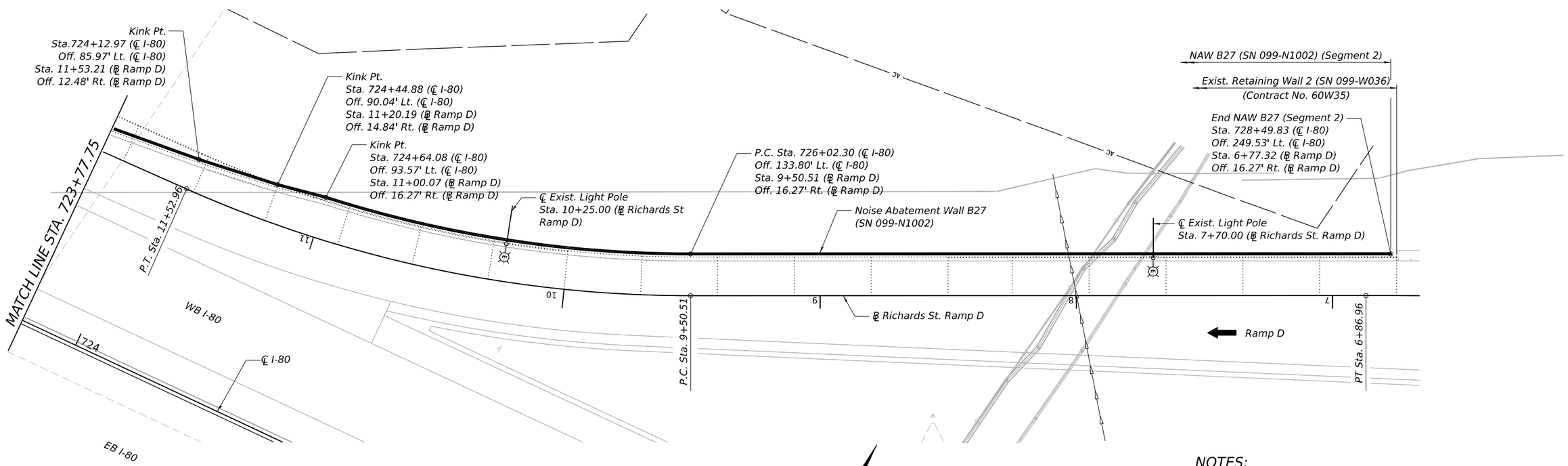

PLAN

NOTES:

1. Theoretical Top of Wall Elevations and Theoretical Bottom of Wall Elevations shall be taken as straight lines in the segments between the stations shown in Elevation view on this sheet and the Noise Wall Data Table on Sheet SN-05.

2. For additional notes and legend, see Sheet SN-04.

MODEL: SHEET
FILE NAME: C:\TRANSYSTEMS\PW_LOCAL\TRANSYSTEMS-PW-01\DMS20791\099N1002-62F94-NAW-003-GPE.DGN
10-27-2025, 16:57:02

exp.

USER NAME =	DESIGNED - BAR	REVISED -	
	CHECKED - VCP	REVISED -	
PLOT SCALE =	DRAWN - MTR	REVISED -	
PLOT DATE =	CHECKED - BAR	REVISED -	

STATE OF ILLINOIS
DEPARTMENT OF TRANSPORTATION

GENERAL PLAN AND ELEVATION 3
NOISE ABATEMENT WALL B27 (SN 099-N1002)

SHEET SN-03 OF SN-08 SHEETS

F.A.I. RTE.	SECTION	COUNTY	TOTAL SHEETS	SHEET NO.
80	2017-057F	WILL	1342	995
		CONTRACT NO. 62F94		
	ILLINOIS	FED. AID PROJECT		

GENERAL NOTES

1. All post stations, offsets and elevations are shown in the Noise Wall Data Table in these plans. The proposed post locations on bridge SN 099-0903 and wall SN 099-W035 are also shown on SA and SD sheets in this contract, respectively. The existing post locations on bridge SN 099-0063 and walls SN 099-W035 and SN 099-W036 are shown in the Contract 60W35 plans. The Contractor shall verify location of existing post anchors and top of existing parapet elevations before preparation of shop drawings.

2. Contractor shall verify location of existing utilities prior to construction. Damage to any utilities shall be repaired by the Contractor at no additional cost to the Department.

3. Wall stations and offsets are measured relative to ℄ I-80 and are measured to the centerline of wall, unless noted otherwise.

4. Contractor shall provide Ashlar Stone Finish on both faces of Noise Abatement Wall. For details, see sheet SN-08.

5. Theoretical top of wall elevations, theoretical bottom of wall elevations, shall be taken as straight lines in the segments between stations shown in the Noise Wall Data Table.

6. NAW denotes Noise Abatement Wall
   B.F. denotes Back Face
   F.F. denotes Front Face

NOISE ABATEMENT WALL
BUILT 20__ BY
STATE OF ILLINOIS
F.A.I. RTE. 80
SEC. 2017-057F
FROM STA. 713+14.93 TO STA. 728+49.83
STRUCTURE NO. 099-N1002

NAME PLATE

See Std. 515001

DESIGN SPECIFICATIONS

2020 AASHTO LRFD Bridge Design Specifications
9th Edition

DESIGN STRESSES

FIELD UNITS

fy = 60,000 psi (Reinforcement)
fy = 50,000 psi (Struct. Steel, M270 Grade 50, posts)
fy = 36,000 psi (Struct. Steel M270 Grade 36, all other structural steel

PRECAST UNITS

f'c = 4,500 psi
fy = 60,000 psi (Reinforcement)
fy = 65,000 psi (Welded Wire Reinforcement)

DESIGN LOADS

Factored Strength III or V Wind: 35 psf
Factored Service I Wind: 15 psf

INDEX OF SHEETS

UTILITY CROSSING DATA TABLE

Utility	Station	Offset (Lt.)	Comments
Ex. Underground Electric	714+59.28	76.27	-
Ex. Underground Fiber Optic	714+56.92	76.27	-
Ex. Underground Fiber Optic	714+51.78	76.27	-
Ex. Underground Fiber Optic	714+56.18	76.27	-
Ex. Underground Fiber Optic	714+56.91	76.27	-
Ex. Underground Electric	714+55.33	76.27	-
Ex. Underground Cable TV	714+64.48	76.27	-
Ex. Underground Gas Main	714+63.20	76.27	-
Ex. Underground Fiber Optic	714+64.75	76.27	-
Ex. Underground Water Main	714+91.06	76.27	-
Ex. Underground Sanitary Sewer	714+81.60	76.27	-
Ex. Underground Storm Sewer	719+76.56	79.53	-
Ex. Underground Sanitary Sewer	723+89.65	83.83	-
Ex. Underground Storm Sewer	727+35.89	196.26	-
Ex. Underground Gas Main	727+44.72	200.39	-
Ex. Underground Telephone	727+46.60	201.27	-
Ex. Underground Water Main	727+62.85	208.87	

Note: Stations and Offsets are measured relative to ℄ I-80.

NOISE REDUCTION DATA

Noise Wall	Noise Wall Str. No.	Face	From Sta.	To Sta.	Noise Reduction Coeffficent	Comments
B27 - Segment 1	099-N1002	I-80 face	713+14.93	720+38.17	Reflective	-
		Residential face			Reflective	-
B27 - Segment 2	099-N1002	I-80 face	723+11.12	728+49.83	Reflective	-
		Residential face			Reflective	-

LEGEND

- Prop. Storm Sewer
- Prop. Catch Basin
- Prop. Temporary Easement
- Prop.R.O.W.
- Exist. R.O.W.
- Exist. Underground Gas Line
- Exist. Underground Electric Line
- Exist. Underground Telephone Line
- Prop. Lighting
- Exist. Lighting

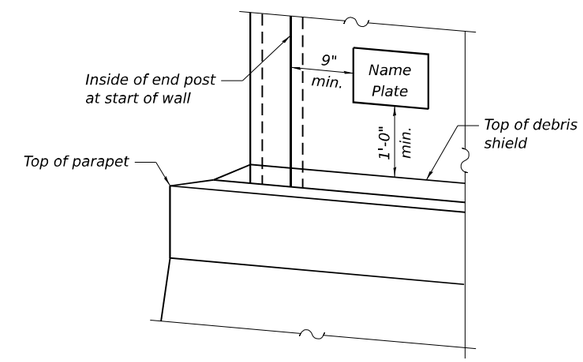

NAME PLATE LOCATION

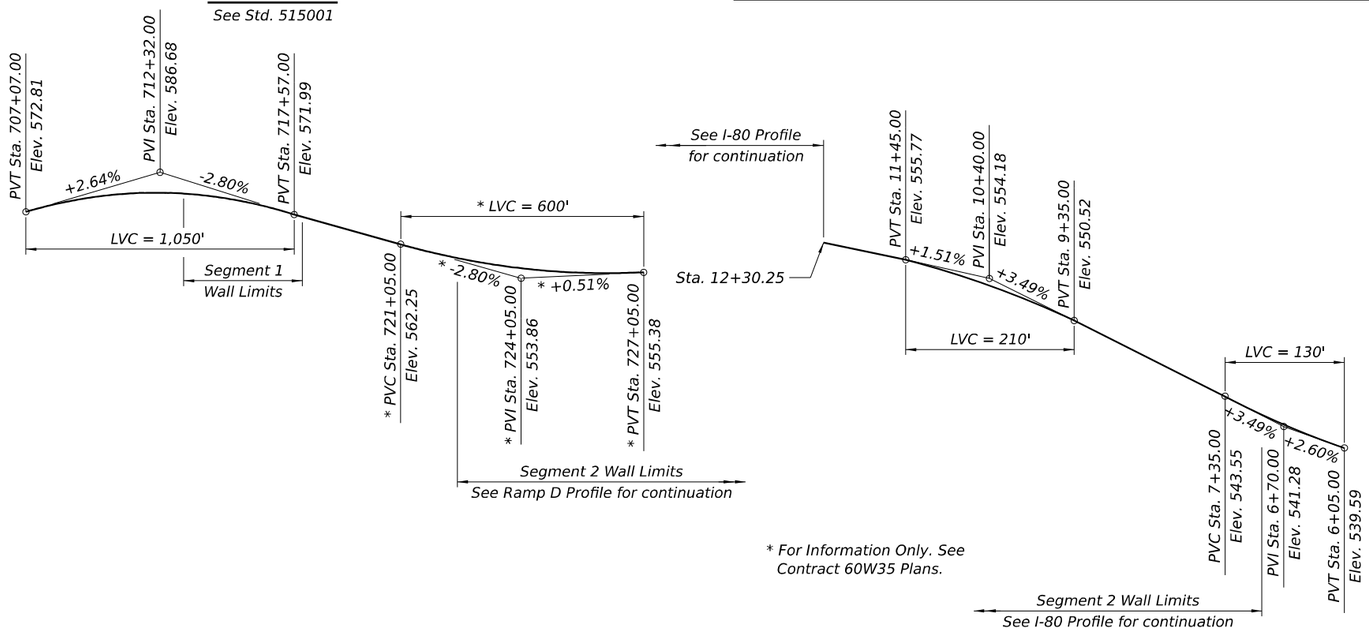

* For Information Only. See Contract 60W35 Plans.

PROFILE GRADE

(Along PGL of I-80 WB)

* PROFILE GRADE

(Along ℄ Richards St. Ramp D)

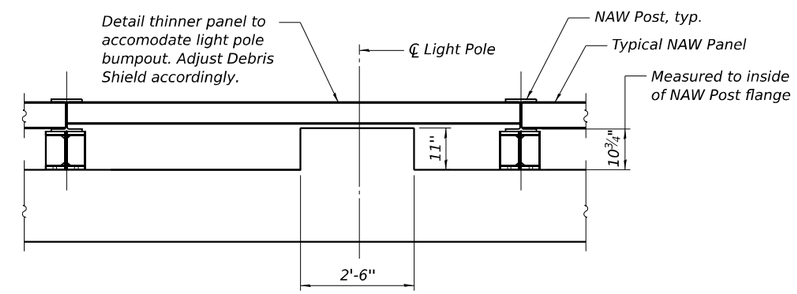

NAW PANEL DETAIL AT LIGHT POLE BUMPOUTS - PLAN

CURVE DATA D-1

(Along ℄ Richards St. Ramp D)

PI Sta. = 5+99.95
Δ = 2°08'40" Lt.
D = 1°13'56"
R = 4,650.00"
T = 87.03'
L = 174.03'
E = 0.81'
e = 6.0%
P.C. Sta. = 5+12.92
P.T. Sta. = 6+86.96

CURVE DATA D-2

(Along ℄ Richards St. Ramp D)

PI Sta. = 10+53.23
Δ = 23°54'59" Rt.
D = 11°48'49"
R = 485.00'
T = 102.72'
L = 202.45'
E = 10.76'
e = 6.0%
P.C. Sta. = 9+50.51
P.T. Sta. = 11+52.96

TOTAL BILL OF MATERIAL

Item	Unit	Total
Name Plates	Each	1
Noise Abatement Wall, Structure Mounted	Sq. Ft.	18,132

MODEL: SHEET
FILE NAME: C:\TRANSYSTEMS\PW_LOCAL\TRANSYSTEMS-PW-01\DMS20791\099N1002-62F94-NAW-004-GD.DGN

10-27-2025, 16:57:06

exp.

USER NAME =	DESIGNED - BAR	REVISED -	
	CHECKED - VCP	REVISED -	
PLOT SCALE =	DRAWN - MTR	REVISED -	
PLOT DATE =	CHECKED - BAR	REVISED -	

STATE OF ILLINOIS
DEPARTMENT OF TRANSPORTATION

GENERAL DATA
NOISE ABATEMENT WALL B27 (SN 099-N1002)

SHEET SN-04 OF SN-08 SHEETS

F.A.I. RTE.	SECTION	COUNTY	TOTAL SHEETS	SHEET NO.
80	2017-057F	WILL	1342	996

CONTRACT NO. 62F94

ILLINOIS FED. AID PROJECT

NOISE ABATEMENT WALL DATA TABLE - SEGMENT 1

Location	I-80 Station	I-80 Offset to CL NAW at CL Post (ft)	Theoretical Top of NAW Elev.	I-80 PG Elev.	Top of Parapet Elev.	Theoretical Bottom of NAW Elev.	Theoretical Wall Height (ft)
P-01	713+14.93	76.27	596.00	579.30	585.06	584.56	11.44
P-02	713+26.60	76.27	596.00	579.24	585.00	584.50	11.50
P-03	713+38.27	76.27	596.00	579.17	584.93	584.43	11.57
P-04	713+49.93	76.27	596.00	579.09	584.85	584.35	11.65
P-05	713+61.60	76.27	596.00	579.00	584.77	584.27	11.73
P-06	713+73.27	76.27	596.00	578.91	584.67	584.17	11.83
P-07	713+84.93	76.27	596.00	578.82	584.58	584.08	11.92
P-08	713+96.60	76.27	596.00	578.71	584.47	583.97	12.03
P-09	714+08.27	76.27	595.92	578.60	584.36	583.86	12.06
P-10	714+19.93	76.27	595.80	578.48	584.24	583.74	12.06
P-11	714+28.35	76.27	595.72	578.39	584.15	583.65	12.07
P-12	714+40.02	76.27	595.60	578.26	584.02	583.52	12.08
P-13	714+48.43	76.27	595.52	578.16	583.92	583.42	12.10
P-14	714+60.10	76.27	595.40	578.01	583.78	583.28	12.12
P-15	714+70.10	76.27	595.30	577.89	583.65	583.15	12.15
P-16	714+81.77	76.27	595.18	577.73	583.49	582.99	12.19
P-17	714+93.43	76.27	595.07	577.57	583.33	582.83	12.24
P-18	715+05.10	76.27	594.95	577.39	583.16	582.66	12.29
P-19	715+16.77	76.27	594.83	577.22	582.98	582.48	12.35
P-20	715+28.43	76.27	594.72	577.03	582.79	582.29	12.42
P-21	715+40.10	76.27	594.60	576.84	582.60	582.10	12.50
P-22	715+50.10	76.27	594.43	576.67	582.43	581.93	12.50
P-23	715+60.10	76.27	594.26	576.49	582.26	581.76	12.50
P-24	715+70.10	76.27	594.08	576.31	582.08	581.58	12.50
P-25	715+81.77	76.27	593.84	576.10	581.84	581.34	12.50
P-26	715+90.18	76.27	593.64	575.94	581.64	581.14	12.50
P-27	715+98.60	76.27	593.44	575.77	581.44	580.94	12.50
P-28	716+08.60	76.27	593.20	575.57	581.20	580.70	12.50
P-29	716+18.60	76.27	592.96	575.37	580.96	580.46	12.50
P-30	716+28.60	76.27	592.71	575.16	580.71	580.21	12.50
P-31	716+38.60	76.27	592.46	574.94	580.46	579.96	12.50
P-32	716+48.60	76.27	592.24	574.72	580.24	579.74	12.50
P-33	716+58.60	76.27	592.01	574.49	580.01	579.51	12.50
P-34	716+68.60	76.27	591.78	574.26	579.78	579.28	12.50
P-35	716+78.60	76.27	591.55	574.02	579.55	579.05	12.50
P-36	716+88.60	76.27	591.30	573.78	579.30	578.80	12.50
P-37	716+98.60	76.27	591.06	573.53	579.06	578.56	12.50
P-38	717+08.60	76.27	590.80	573.28	578.80	578.30	12.50
P-39	717+18.60	76.27	590.55	573.03	578.55	578.05	12.50
P-40	717+28.60	76.27	590.28	572.76	578.28	577.78	12.50
P-41	717+38.60	76.27	590.02	572.50	578.02	577.52	12.50
P-42	717+48.60	76.27	589.74	572.22	577.74	577.24	12.50
P-43	717+58.60	76.27	589.47	571.94	577.47	576.97	12.50
P-44	717+68.60	76.27	589.19	571.66	577.19	576.69	12.50
P-45	717+78.60	76.27	588.91	571.38	576.91	576.41	12.50
P-46	717+88.60	76.27	588.63	571.10	576.63	576.13	12.50
P-47	717+98.60	76.27	588.35	570.82	576.35	575.85	12.50
P-48	718+08.60	76.27	588.07	570.55	576.07	575.57	12.50
Kink Pt	718+13.51	76.27	587.93	570.41	575.93	575.43	12.50
P-49	718+18.57	76.37	587.79	570.27	575.79	575.29	12.50
P-50	718+28.57	76.57	587.50	569.99	575.50	575.00	12.50
P-51	718+38.57	76.77	587.22	569.71	575.22	574.72	12.50
P-52	718+48.57	76.97	586.93	569.43	574.93	574.43	12.50
P-53	718+58.57	77.17	586.65	569.15	574.65	574.15	12.50
P-54	718+68.56	77.37	586.37	568.87	574.37	573.87	12.50
P-55	718+78.56	77.57	586.08	568.59	574.08	573.58	12.50
P-56	718+88.56	77.77	585.80	568.31	573.80	573.30	12.50
P-57	718+98.56	77.97	585.52	568.03	573.52	573.02	12.50
P-58	719+08.56	78.17	585.23	567.75	573.23	572.73	12.50
P-59	719+18.55	78.37	584.95	567.47	572.95	572.45	12.50
P-60	719+28.55	78.57	584.66	567.19	572.66	572.16	12.50
P-61	719+38.54	78.77	584.38	566.91	572.38	571.88	12.50
P-62	719+48.54	78.97	584.10	566.63	572.10	571.60	12.50
P-63	719+58.54	79.17	583.86	566.35	571.86	571.36	12.50
P-64	719+68.54	79.37	583.61	566.07	571.61	571.11	12.50
P-65	719+78.54	79.57	583.37	565.79	571.37	570.87	12.50
P-66	719+88.53	79.77	583.12	565.51	571.12	570.62	12.50
P-67	719+98.53	79.97	582.88	565.23	570.88	570.38	12.50
P-68	720+08.10	80.16	582.65	564.96	570.65	570.15	12.50
Kink Pt	720+11.43	80.23	582.55	564.87	570.55	570.05	12.50
P-69	720+18.17	80.23	582.36	564.68	570.36	569.86	12.50
P-70	720+28.17	80.23	582.08	564.40	570.08	569.58	12.50
P-71	720+38.17	80.23	581.80	564.12	569.80	569.30	12.50

NOISE ABATEMENT WALL DATA TABLE - SEGMENT 2

Location	Richards St. Ramp D Station	Ramp D Offset to CL NAW at CL Post (ft)	Theoretical Top of NAW Elev.	Ramp D PG Elev.	Top of Parapet Elev.	Theoretical Bottom of NAW Elev.	Theoretical Wall Height (ft)
P-72	*723+11.12	8.83	575.30	*557.65	563.30	562.80	12.50
P-73	*723+21.12	8.81	575.15	*557.49	563.15	562.65	12.50
P-74	*723+31.12	8.79	575.00	*557.33	563.00	562.50	12.50
P-75	12+24.96	8.77	574.85	556.97	562.85	562.35	12.50
P-76	12+15.29	8.77	574.71	556.82	562.71	562.21	12.50
P-77	12+05.62	8.77	574.55	556.68	562.55	562.05	12.50
Kink Pt.	12+05.10	8.77	574.54	556.67	562.54	562.04	12.50
P-78	11+96.18	9.41	574.37	556.54	562.37	561.87	12.50
P-79	11+86.54	10.10	574.19	556.39	562.19	561.69	12.50
P-80	11+76.89	10.79	573.84	556.25	561.99	561.49	12.35
P-81	11+67.22	11.47	573.36	556.10	561.80	561.30	12.07
P-82	11+57.61	12.16	572.88	555.96	561.59	561.09	11.79
Kink Pt	11+53.21	12.48	572.66	555.89	561.50	561.00	11.66
P-83	11+47.61	13.03	572.38	555.81	561.38	560.88	11.50
P-84	11+37.87	13.85	571.89	555.66	561.16	560.66	11.23
P-85	11+28.11	14.47	571.41	555.50	560.93	560.43	10.97
Kink Pt	11+20.19	14.84	571.01	555.36	560.74	560.24	10.77
P-86	11+18.48	14.99	570.92	555.33	560.69	560.19	10.73
P-87	11+08.70	15.76	570.44	555.16	560.43	559.93	10.50
Kink Pt	11+00.07	16.27	570.00	554.99	560.19	559.69	10.31
P-88	10+98.75	16.27	569.96	554.97	560.16	559.66	10.30
P-89	10+87.61	16.27	569.63	554.75	559.94	559.44	10.19
P-90	10+77.84	16.27	569.34	554.54	559.73	559.23	10.10
P-91	10+68.06	16.27	569.04	554.33	559.52	559.02	10.02
P-92	10+58.29	16.27	568.75	554.11	559.30	558.80	9.95
P-93	10+48.52	16.27	568.46	553.87	559.06	558.56	9.89
P-94	10+38.23	16.27	568.15	553.62	558.81	558.31	9.84
P-95	10+27.95	16.27	567.84	553.36	558.55	558.05	9.79
P-96	10+18.18	16.27	567.55	553.10	558.29	557.79	9.76
P-97	10+07.89	16.27	567.24	552.81	558.00	557.50	9.73
P-98	9+97.60	16.27	566.95	552.52	557.75	557.25	9.70
P-99	9+87.32	16.27	566.75	552.22	557.49	556.99	9.75
P-100	9+77.03	16.27	566.54	551.91	557.23	556.73	9.81
P-101	9+66.74	16.27	566.33	551.58	556.96	556.46	9.87
P-102	9+56.97	16.27	566.14	551.27	556.69	556.19	9.95
PC	9+50.51	16.27	566.01	551.05	556.51	556.01	10.00
P-103	9+47.29	16.27	565.95	550.94	556.40	555.90	10.04
P-104	9+37.29	16.27	565.75	550.60	556.06	555.56	10.18
P-105	9+27.29	16.27	565.55	550.25	555.71	555.21	10.33
P-106	9+17.29	16.27	565.35	549.91	555.37	554.87	10.48
P-107	9+07.29	16.27	565.15	549.56	555.02	554.52	10.63
P-108	8+97.29	16.27	564.92	549.21	554.67	554.17	10.75
P-109	8+87.29	16.27	564.62	548.86	554.32	553.82	10.80
P-110	8+77.29	16.27	564.32	548.51	553.97	553.47	10.85
P-111	8+67.29	16.27	564.02	548.16	553.62	553.12	10.90
P-112	8+57.29	16.27	563.72	547.81	553.27	552.77	10.95
P-113	8+47.28	16.27	563.42	547.46	552.92	552.42	10.99
P-114	8+37.28	16.27	563.12	547.12	552.58	552.08	11.04
P-115	8+27.28	16.27	562.82	546.77	552.23	551.73	11.09
P-116	8+17.28	16.27	562.52	546.42	551.88	551.38	11.14
P-117	8+07.28	16.27	562.22	546.07	551.53	551.03	11.19
P-118	7+97.28	16.27	561.96	545.72	551.18	550.68	11.28
P-119	7+87.28	16.27	561.80	545.37	550.83	550.33	11.46
P-120	7+77.28	16.27	561.64	545.02	550.48	549.98	11.65
P-121	7+67.28	16.27	561.48	544.67	550.13	549.63	11.84
P-122	7+57.28	16.27	561.32	544.33	549.79	549.29	12.03
P-123	7+47.28	16.27	561.16	543.98	549.44	548.94	12.22
P-124	7+37.28	16.27	561.00	543.63	549.09	548.59	12.41
P-125	7+27.28	16.27	560.74	543.28	548.74	548.24	12.50
P-126	7+17.28	16.27	560.40	542.94	548.40	547.90	12.50
P-127	7+07.28	16.27	560.07	542.61	548.07	547.57	12.50
P-128	6+97.28	16.27	559.74	542.28	547.74	547.24	12.50
P-129	6+87.28	16.27	559.42	541.96	547.42	546.92	12.50
P-130	6+77.32	16.27	559.11	541.65	547.11	546.61	12.50

* Relative to ℄ I-80, not ℄ Richards St. Ramp D

NOTE:

"P-" indicates a NAW post.

MODEL: SHEET
FILE NAME: C:\TRANSYSTEMS\PW_LOCAL\TRANSYSTEMS-PW-01\DMS20791\099N1002-62F94-NAW-005-DATATABLE.DGN

10-27-2025, 16:57:09

exp.

USER NAME =	DESIGNED - BAR	REVISED -	
	CHECKED - VPC	REVISED -	
PLOT SCALE =	DRAWN - MTR	REVISED -	
PLOT DATE =	CHECKED - BAR	REVISED -	

STATE OF ILLINOIS
DEPARTMENT OF TRANSPORTATION

DATA TABLES
NOISE ABATEMENT WALL B27 (SN 099-N1002)

SHEET SN-05 OF SN-08 SHEETS

F.A.I. RTE.	SECTION	COUNTY	TOTAL SHEETS	SHEET NO.
80	2017-057F	WILL	1342	997
		CONTRACT NO. 62F94		
	ILLINOIS	FED. AID PROJECT		

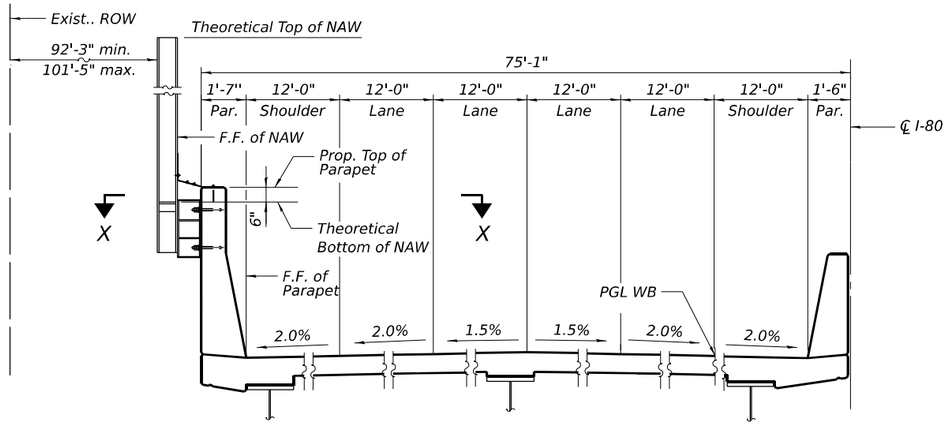

SECTION THRU PROPOSED WB BRIDGE (SN 099-0903)

(Sta. 713+14.93 to 716+00.00)
(Looking East, Bridge shown, Approach Slab and MSE Wall are similar)

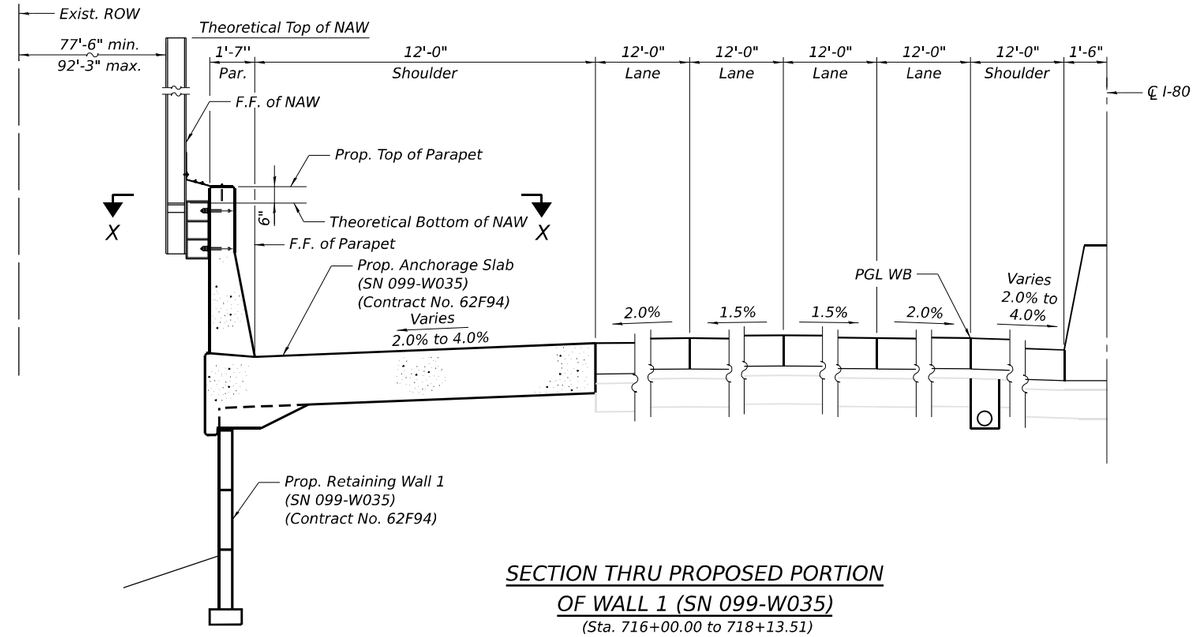

SECTION THRU PROPOSED PORTION OF WALL 1 (SN 099-W035)

(Sta. 716+00.00 to 718+13.51)
(Looking East)

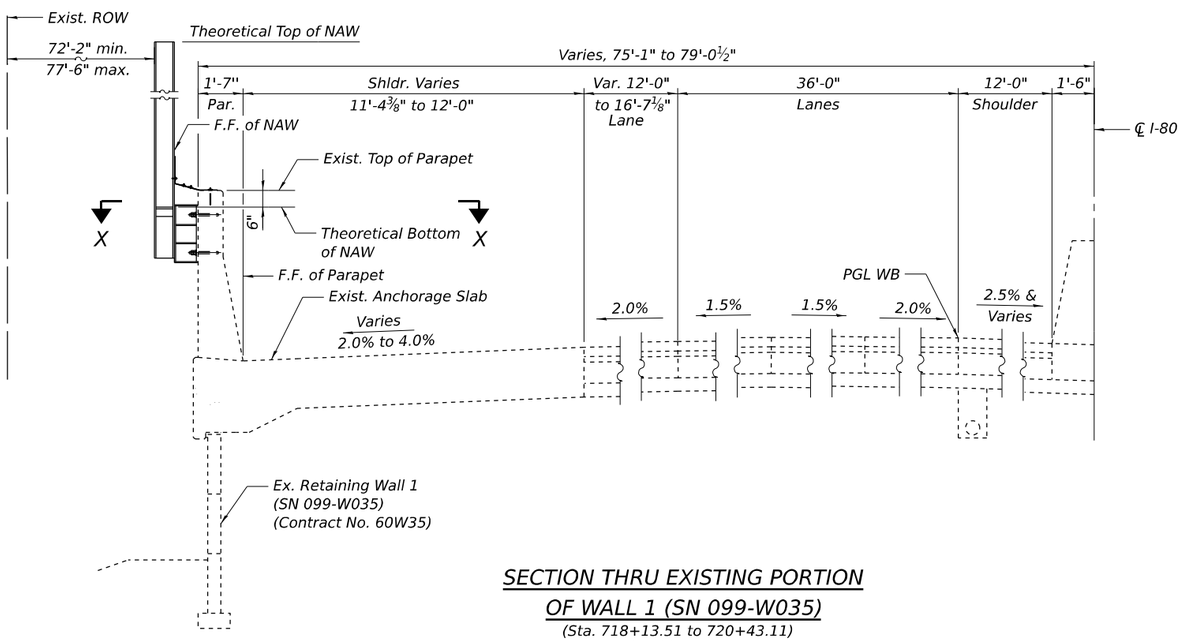

SECTION THRU EXISTING PORTION OF WALL 1 (SN 099-W035)

(Sta. 718+13.51 to 720+43.11)
(Looking East)

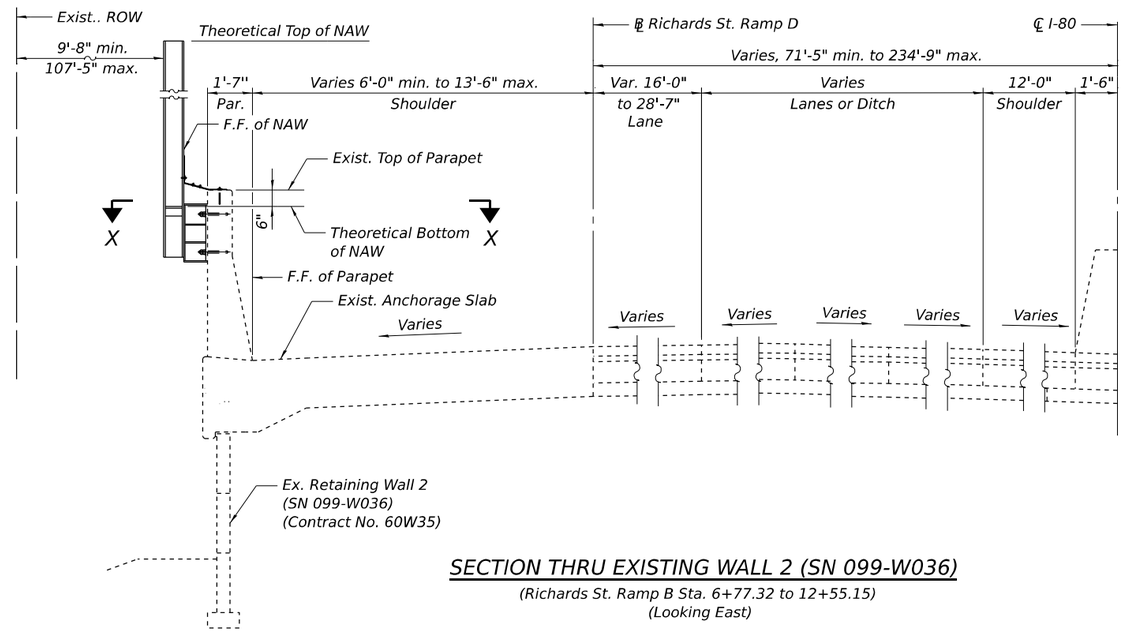

SECTION THRU EXISTING WALL 2 (SN 099-W036)

(Richards St. Ramp B Sta. 6+77.32 to 12+55.15)
(Looking East)

NOTES:

1. NAW denotes Noise Abatement Wall
   B.F. denotes Back Face
   F.F. denotes Front Face
2. For Section X-X, see Sheet SN-07.

MODEL: SHEET
FILE NAME: C:\TRANSYSTEMS\PW_LOCAL\TRANSYSTEMS-PW-01\DMS20791\099N1002-62F94-NAW-006-SECTIONS.DGN
10-27-2025, 16:57:13

exp.

USER NAME =	DESIGNED - BAR	REVISED -	
	CHECKED - VCP	REVISED -	
PLOT SCALE =	DRAWN - MTR	REVISED -	
PLOT DATE =	CHECKED - BAR	REVISED -	

STATE OF ILLINOIS
DEPARTMENT OF TRANSPORTATION

CROSS SECTIONS
NOISE ABATEMENT WALL B27 (SN 099-N1002)

SHEET SN-06 OF SN-08 SHEETS

F.A.I. RTE.	SECTION	COUNTY	TOTAL SHEETS	SHEET NO.
80	2017-057F	WILL	1342	998
		CONTRACT NO. 62F94		
		ILLINOIS	FED. AID PROJECT	

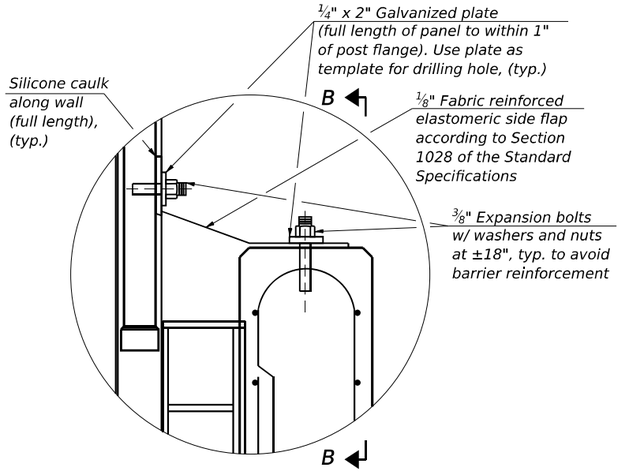

TYPICAL SECTION THRU DEBRIS SHIELD

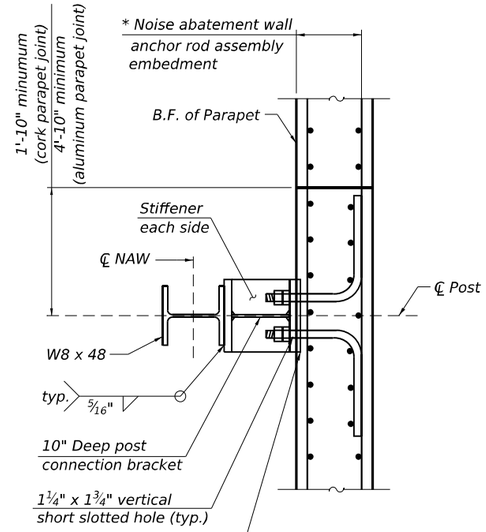

SECTION X-X

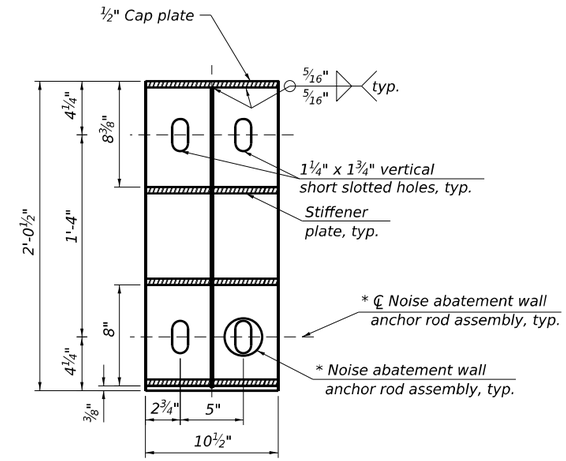

SECTION A-A

(Showing post connection bracket)

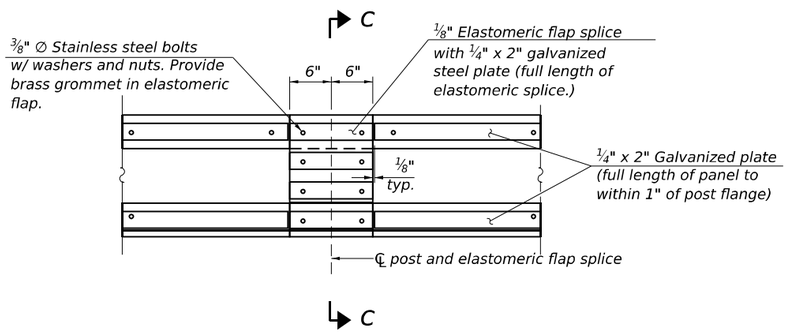

SECTION B-B

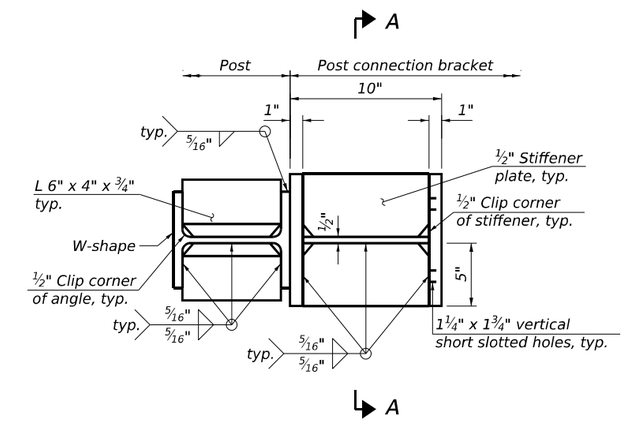

SECTION THRU POST AND POST CONNECTION BRACKET

(Template ℙ not shown for clarity)

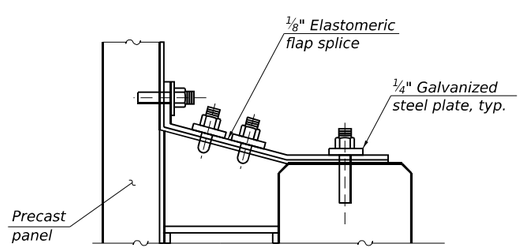

SECTION C-C

* For Information Only. See Bridge SN 099-0903 plans (SA sheets) or Wall SN 099-W035 (SD sheets) for details and payment.

MODEL: SHEET
FILE NAME: C:\TRANSYSTEMS\PW_LOCAL\TRANSYSTEMS-PW-01\DMS20791\099N1002-62F94-NAW-007-DET01.DGN

10-27-2025, 16:57:16

exp.

USER NAME =	DESIGNED - BAR	REVISED -	
	CHECKED - VCP	REVISED -	
PLOT SCALE =	DRAWN - MTR	REVISED -	
PLOT DATE =	CHECKED - BAR	REVISED -	

STATE OF ILLINOIS
DEPARTMENT OF TRANSPORTATION

DETAILS 1
NOISE ABATEMENT WALL B27 (SN 099-N1002)

SHEET SN-07 OF SN-08 SHEETS

F.A.I. RTE.	SECTION	COUNTY	TOTAL SHEETS	SHEET NO.
80	2017-057F	WILL	1342	999
		CONTRACT NO. 62F94		
		ILLINOIS	FED. AID PROJECT	

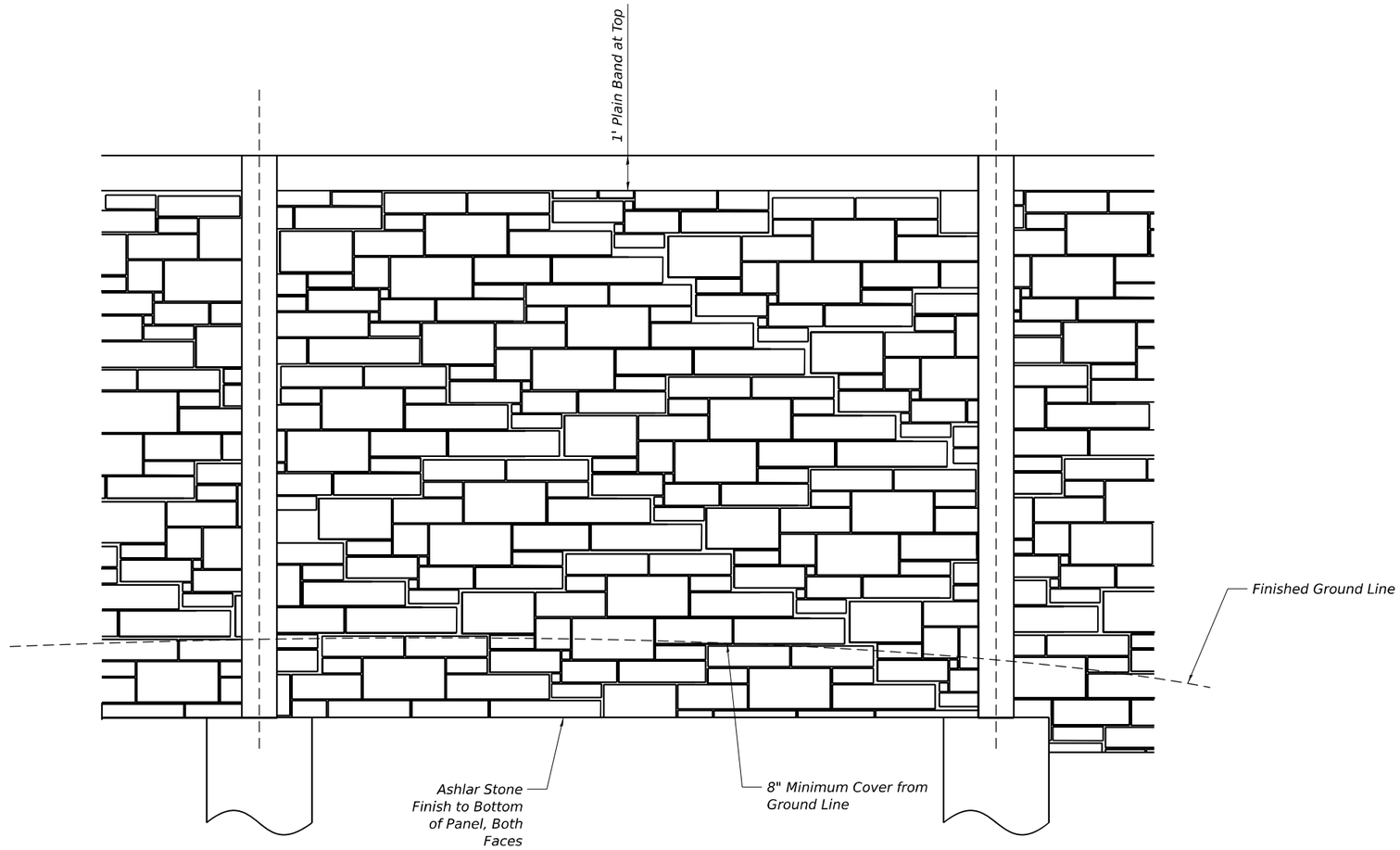

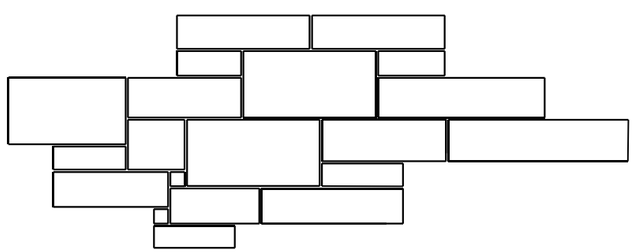

ENLARGED PATTERN DETAIL

Stone Pattern Sizes:
3" X 3" - 14" X 28"

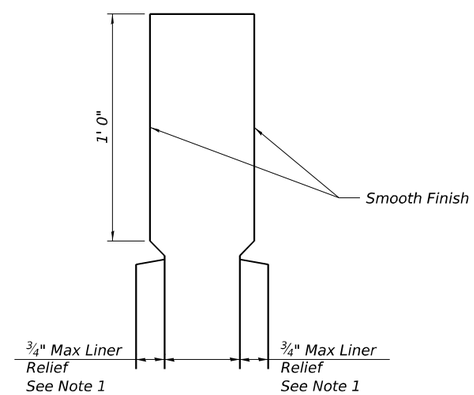

ENLARGED CAP DETAIL

Notes:

1. Each side of the noise panels shall have a rolled ashlar stone finish. The finish shall have a ¾" relief. The color of both sides of the panels, plain band, posts and all other visible elements shall follow the special provisions.

MODEL: SHEET
FILE NAME: C:\TRANSYSTEMS\PW_LOCAL\TRANSYSTEMS-PW-01\DMS20791\099N1002-62F94-NAW-008-DET02.DGN

10-27-2025, 16:57:18

exp.

USER NAME =	DESIGNED - BAR	REVISED -	
	CHECKED - VCP	REVISED -	
PLOT SCALE =	DRAWN - MTR	REVISED -	
PLOT DATE =	CHECKED - BAR	REVISED -	

STATE OF ILLINOIS
DEPARTMENT OF TRANSPORTATION

DETAILS 2
NOISE ABATEMENT WALL B27 (SN 099-N1002)

SHEET SN-08 OF SN-08 SHEETS

F.A.I. RTE.	SECTION	COUNTY	TOTAL SHEETS	SHEET NO.
80	2017-057F	WILL	1342	1000

CONTRACT NO. 62F94

ILLINOIS FED. AID PROJECT