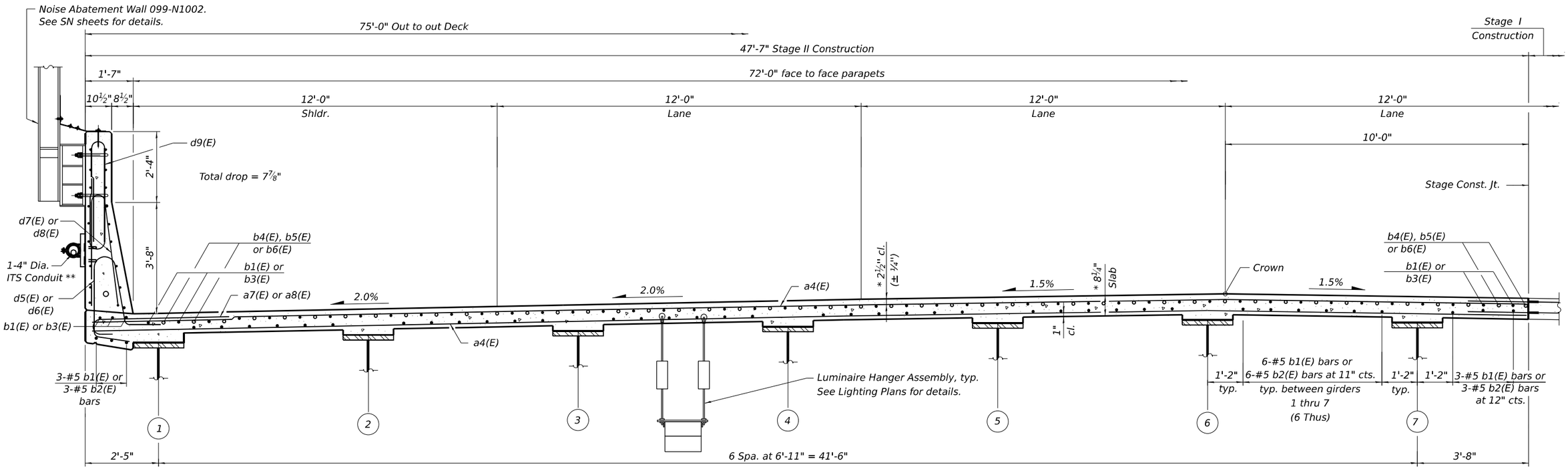

NEAR PIER

* Prior to grinding.
** See ITS Plans for details.

CROSS SECTION A-A - STAGE II CONSTRUCTION - WB

(Looking East)

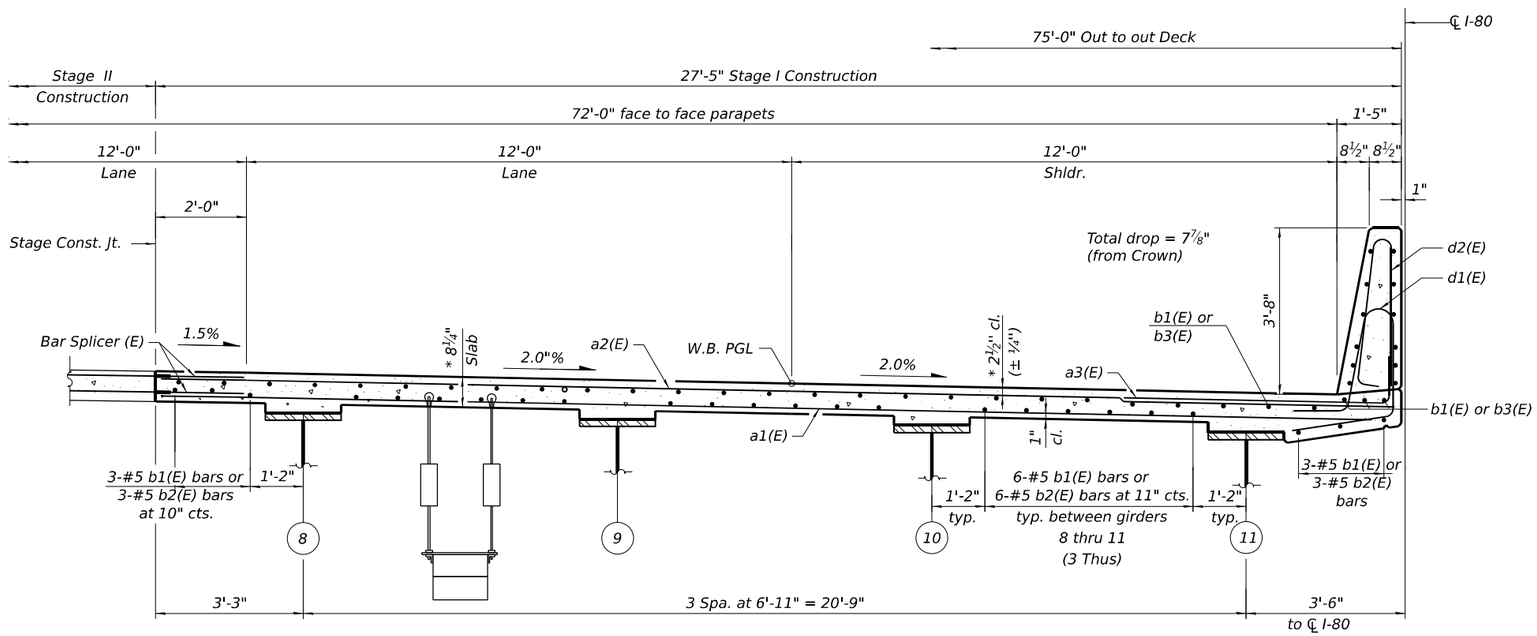

* Prior to grinding.

NEAR MIDSPAN

CROSS SECTION A-A - STAGE I CONSTRUCTION - WB

(Looking East)

MODEL: SHEET
FILE NAME: C:\TRANSYSTEMS\PW_LOCAL\TRANSYSTEMS-PW-01\DMS20864\0990902_0903-62F94-037-DECKSEC1.DGN

10-27-2025, 16:48:05

USER NAME =	DESIGNED - BAR	REVISED -	
	CHECKED - KK	REVISED -	
PLOT SCALE =	DRAWN - HBJ	REVISED -	
PLOT DATE =	CHECKED - BAR	REVISED -	

STATE OF ILLINOIS
DEPARTMENT OF TRANSPORTATION

DECK SECTIONS
STRUCTURE NO. 099-0903 (WB)

SHEET SA-37 OF SA-112 SHEETS

F.A.I. RTE.	SECTION	COUNTY	TOTAL SHEETS	SHEET NO.
80	2017-057F	WILL	1342	701

CONTRACT NO. 62F94

ILLINOIS FED. AID PROJECT

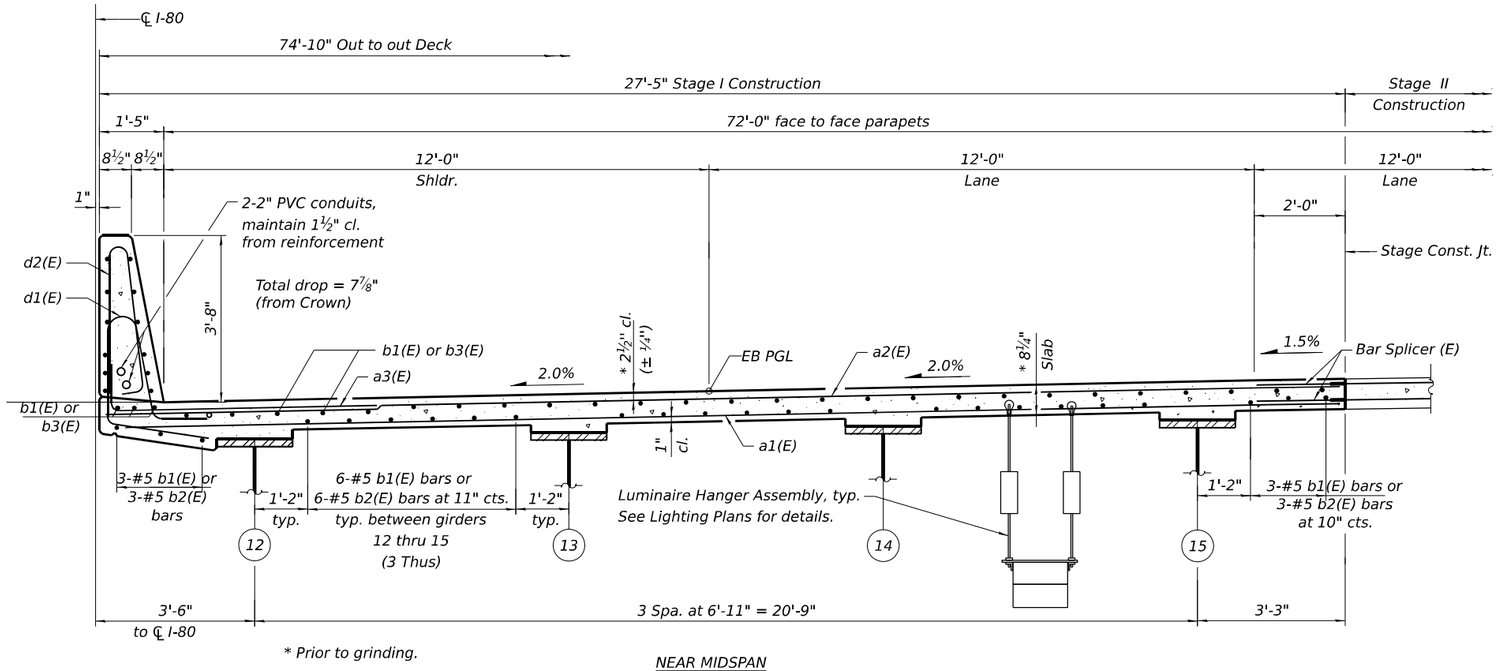

* Prior to grinding.

NEAR MIDSPAN

CROSS SECTION B-B - STAGE I CONSTRUCTION - EB

(Looking East)

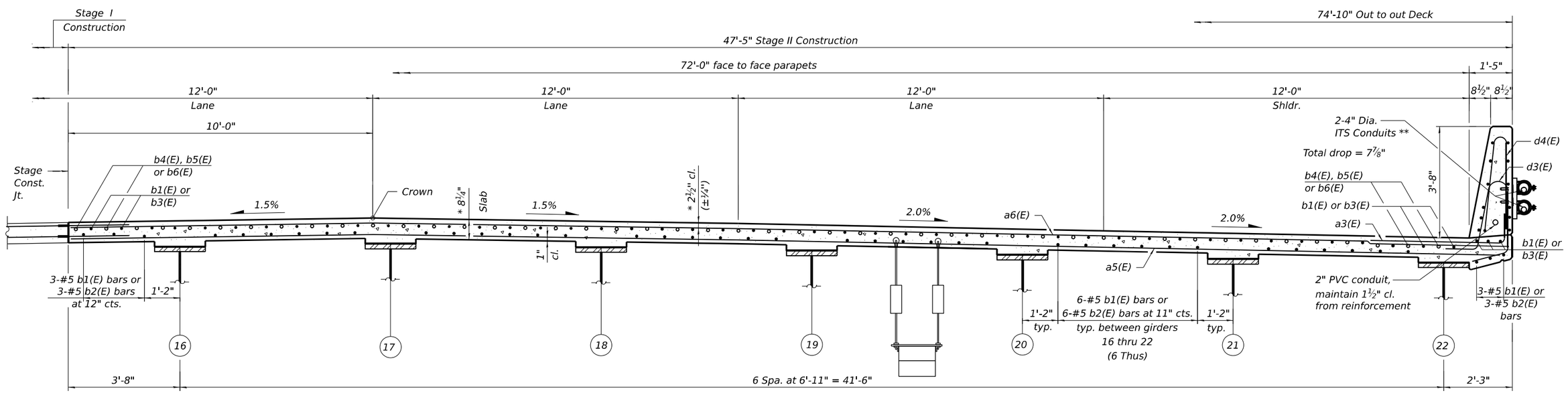

* Prior to grinding.
** See ITS Plans for details.

NEAR PIER

CROSS SECTION B-B - STAGE II CONSTRUCTION - EB

(Looking East)

Notes:

1. For notes, see Sheet SA-31.
2. For Parapet details, see Sheets SA-41 & SA-42.

MODEL: SHEET
FILE NAME: C:\TRANSYSTEMS\PW_LOCAL\TRANSYSTEMS-PW-01\DMS20864\0990902_0903-62F94-038-DECKSEC2.DGN

10-27-2025, 16:48:07

exp.

USER NAME =	DESIGNED - BAR	REVISED -	
	CHECKED - KK	REVISED -	
PLOT SCALE =	DRAWN - HBJ	REVISED -	
PLOT DATE =	CHECKED - BAR	REVISED -	

STATE OF ILLINOIS
DEPARTMENT OF TRANSPORTATION

DECK SECTIONS
STRUCTURE NO. 099-0902 (EB)

SHEET SA-38 OF SA-112 SHEETS

F.A.I. RTE.	SECTION	COUNTY	TOTAL SHEETS	SHEET NO.
80	2017-057F	WILL	1342	702
		CONTRACT NO. 62F94		
		ILLINOIS	FED. AID PROJECT	

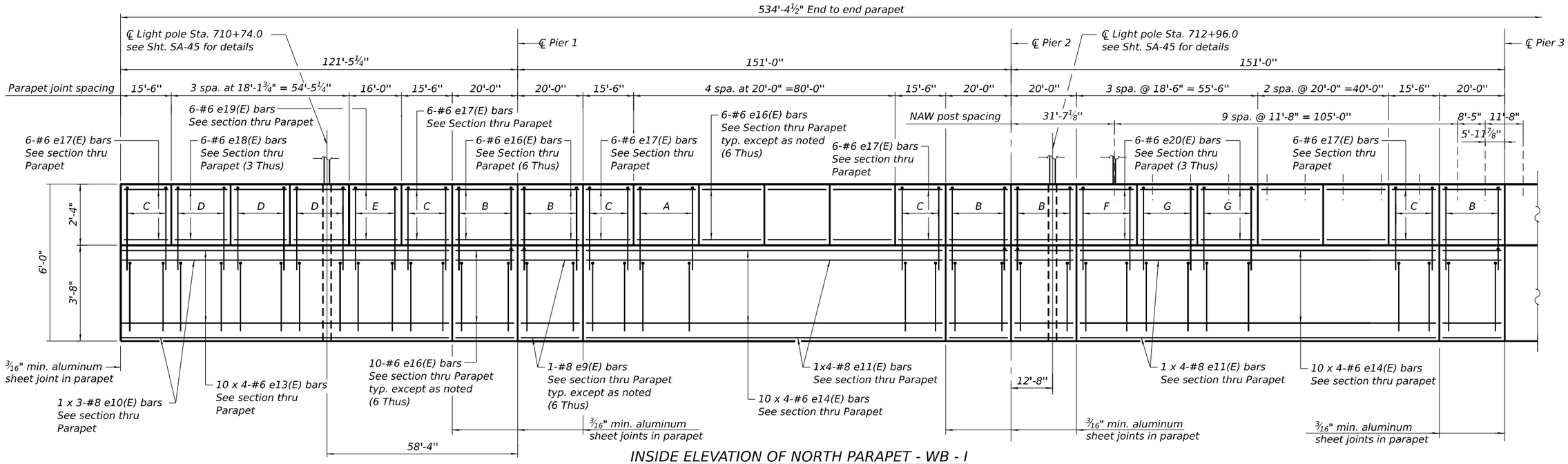

INSIDE ELEVATION OF NORTH PARAPET - WB - I

(Looking North, NAW not shown for clarity)

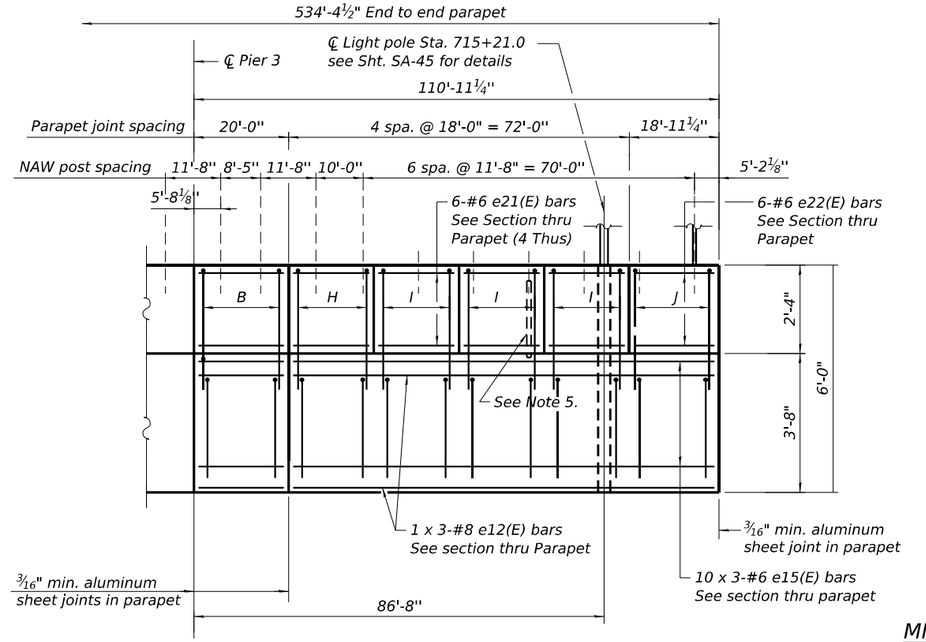

INSIDE ELEVATION OF NORTH PARAPET - WB - II

(Looking North, NAW not shown for clarity)

A: 48-#5 d8(E) bars & 48-#5 d9(E) bars @ 5" cts.
Typ. unless noted otherwise (6 Thus)
B: 48-#6 d7(E) bars & 48-#5 d9(E) bars @ 5" cts., (6 Thus)
C: 37-#6 d7(E) bars & 37-#5 d9(E) bars @ 5" cts., (5 Thus)
D: 44-#5 d8(E) bars & 44-#5 d9(E) bars @ 5" cts., (3 Thus)
E: 38-#5 d8(E) bars & 38-#5 d9(E) bars @ 5" cts.
F: 44-#6 d7(E) bars & 44-#5 d9(E) bars @ 5" cts.
G: 45-#5 d8(E) bars & 45-#5 d9(E) bars @ 5" cts., (2 Thus)
H: 43-#6 d7(E) bars & 43-#5 d9(E) bars @ 5" cts.
I: 43-#5 d8(E) bars & 43-#5 d9(E) bars @ 5" cts., (3 Thus)
J: 46-#6 d7(E) bars & 46-#5 d9(E) bars @ 5" cts.

MINIMUM BAR LAP

(Parapet)

#6 bar = 4'-0"
#8 bar = 5'-11"

Notes:

1. Bars indicated thus 4 x 5-#4 etc. indicates 4 lines of bars with 5 lengths per line.
2. Dimensions are measured along the inside face of parapet.
3. For Section thru Parapet, see Sht. SA-43.
4. For Bar List, see Sht. SA-47.
5. ¼" Anchor Rod Template ℄ embedded in parapet, to be installed by bridge contractor. Typ. at each NAW post, see Sht. SA-46 for details.

MODEL: SHEET
FILE NAME: C:\TRANSYSTEMS\PW_LOCAL\TRANSYSTEMS-PW-01\DMS20864\0990902_0903-62F94-039-PARELEV1.DGN

10-27-2025, 16:48:10

exp.

USER NAME =	DESIGNED - BAR	REVISED -	
	CHECKED - KK	REVISED -	
PLOT SCALE =	DRAWN - HBJ	REVISED -	
PLOT DATE =	CHECKED - BAR	REVISED -	

STATE OF ILLINOIS
DEPARTMENT OF TRANSPORTATION

PARAPET ELEVATION 1
STRUCTURE NO. 099-0903 (WB)

SHEET SA-39 OF SA-112 SHEETS

F.A.I. RTE.	SECTION	COUNTY	TOTAL SHEETS	SHEET NO.
80	2017-057F	WILL	1342	703
		CONTRACT NO. 62F94		
		ILLINOIS	FED. AID PROJECT	

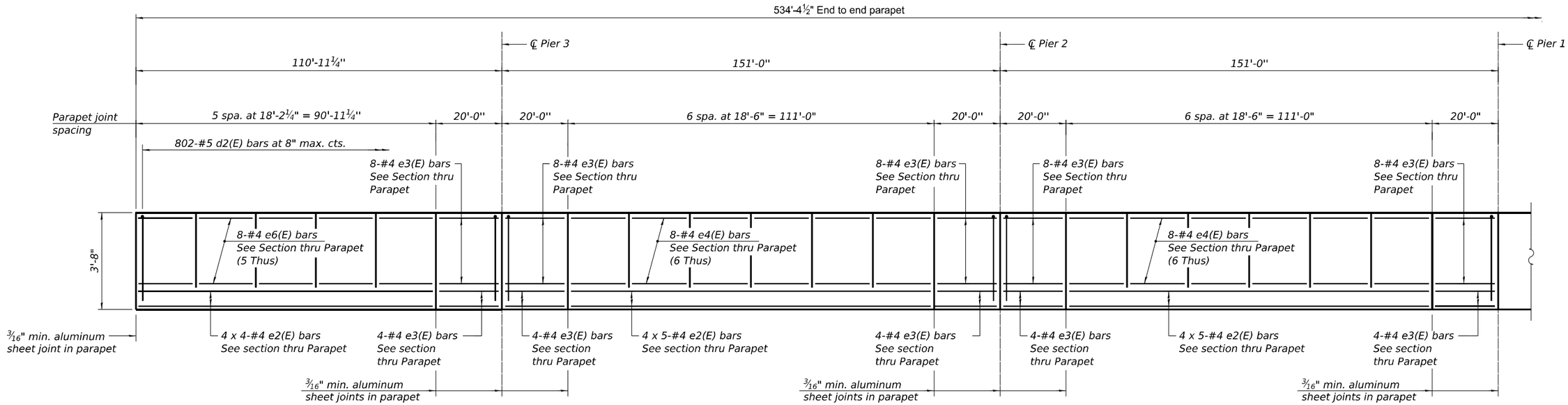

INSIDE ELEVATION OF SOUTH PARAPET - WB - I

(Looking South)

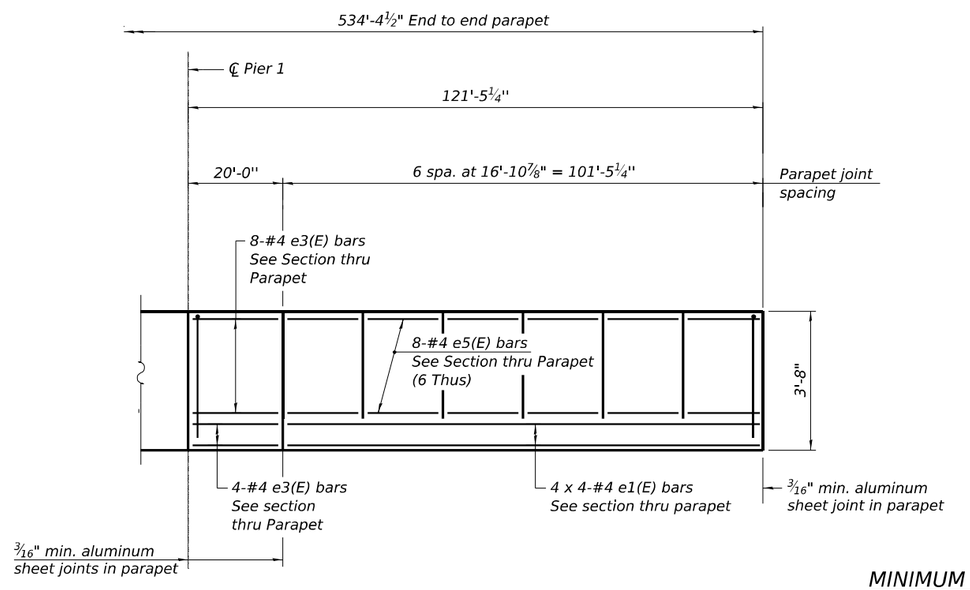

INSIDE ELEVATION OF SOUTH PARAPET - WB - II

(Looking South)

MINIMUM BAR LAP

(Parapet)

#4 bar = 2'-8"

Notes:

1. Bars indicated thus 4 x 5-#4 etc. indicates 4 lines of bars with 5 lengths per line.
2. Dimensions are measured along the inside face of parapet.
3. For Section thru Parapet, see Sht. SA-44.
4. For Bar List, see Sht. SA-47.

MODEL: SHEET
FILE NAME: C:\TRANSYSTEMS\PW_LOCAL\TRANSYSTEMS-PW-01\DMS20864\0990902_0903-62F94-040-PARELEV2.DGN

10-27-2025, 16:48:13

exp.

USER NAME =	DESIGNED - BAR	REVISED -	
	CHECKED - KK	REVISED -	
PLOT SCALE =	DRAWN - HBJ	REVISED -	
PLOT DATE =	CHECKED - BAR	REVISED -	

STATE OF ILLINOIS
DEPARTMENT OF TRANSPORTATION

PARAPET ELEVATION 2
STRUCTURE NO. 099-0903 (WB)

SHEET SA-40 OF SA-112 SHEETS

F.A.I. RTE.	SECTION	COUNTY	TOTAL SHEETS	SHEET NO.
80	2017-057F	WILL	1342	704

CONTRACT NO. 62F94

ILLINOIS FED. AID PROJECT

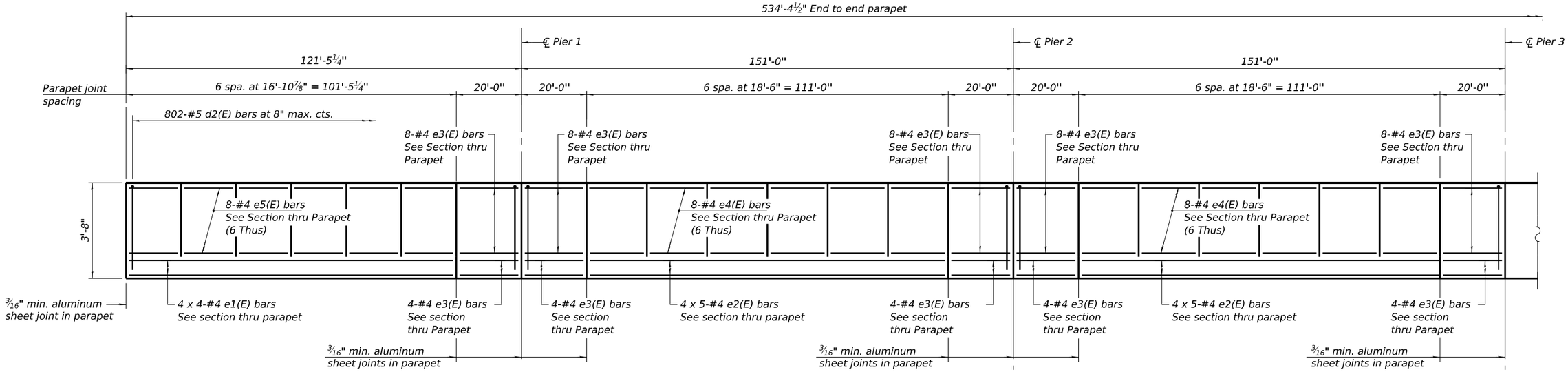

INSIDE ELEVATION OF NORTH PARAPET - EB - I

(Looking North)

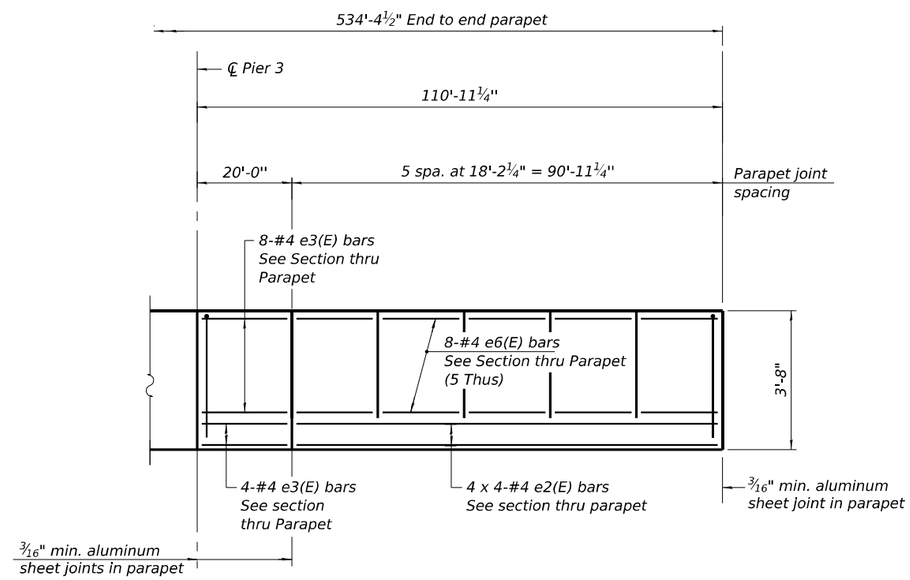

INSIDE ELEVATION OF NORTH PARAPET - EB - II

(Looking North)

MINIMUM BAR LAP

(Parapet)

#4 bar = 2'-8"

Notes:

1. Bars indicated thus 4 x 5-#4 etc. indicates 4 lines of bars with 5 lengths per line.
2. Dimensions are measured along the inside face of parapet.
3. For Section thru Parapet, see Sht. SA-44.
4. For Bar List, see Sht. SA-47.

MODEL: SHEET
FILE NAME: C:\TRANSYSTEMS\PW_LOCAL\TRANSYSTEMS-PW-01\DMS20864\0990902_0903-62F94-041-PARELEV3.DGN

10-27-2025, 16:48:16

exp.

USER NAME =	DESIGNED - BAR	REVISED -	
	CHECKED - KK	REVISED -	
PLOT SCALE =	DRAWN - HBJ	REVISED -	
PLOT DATE =	CHECKED - BAR	REVISED -	

STATE OF ILLINOIS
DEPARTMENT OF TRANSPORTATION

PARAPET ELEVATION 1
STRUCTURE NO. 099-0902 (EB)

SHEET SA-41 OF SA-112 SHEETS

F.A.I. RTE.	SECTION	COUNTY	TOTAL SHEETS	SHEET NO.
80	2017-057F	WILL	1342	705

CONTRACT NO. 62F94

ILLINOIS FED. AID PROJECT

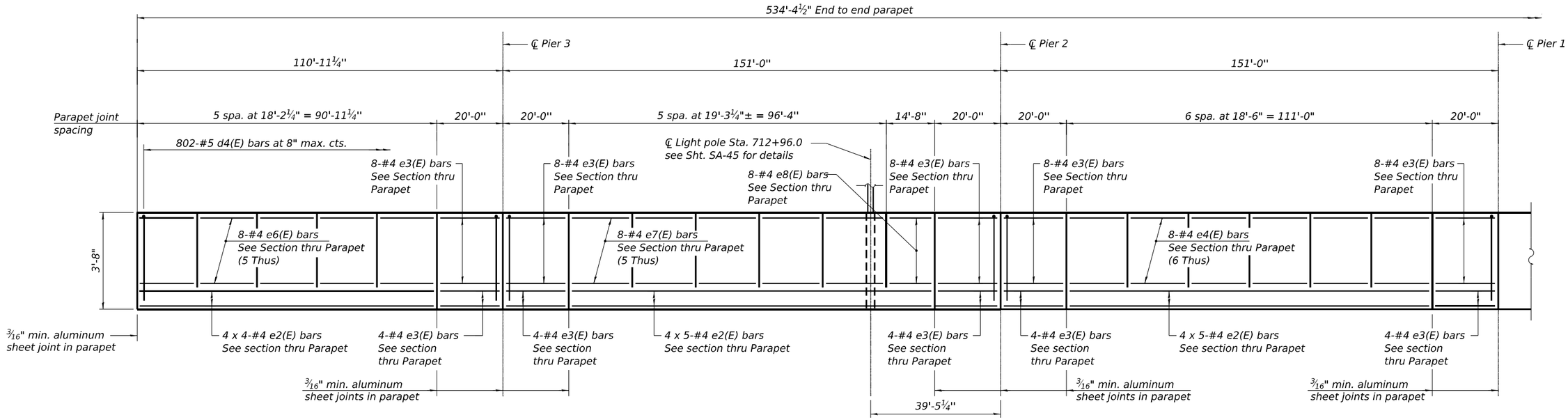

INSIDE ELEVATION OF SOUTH PARAPET - EB - I

(Looking South)

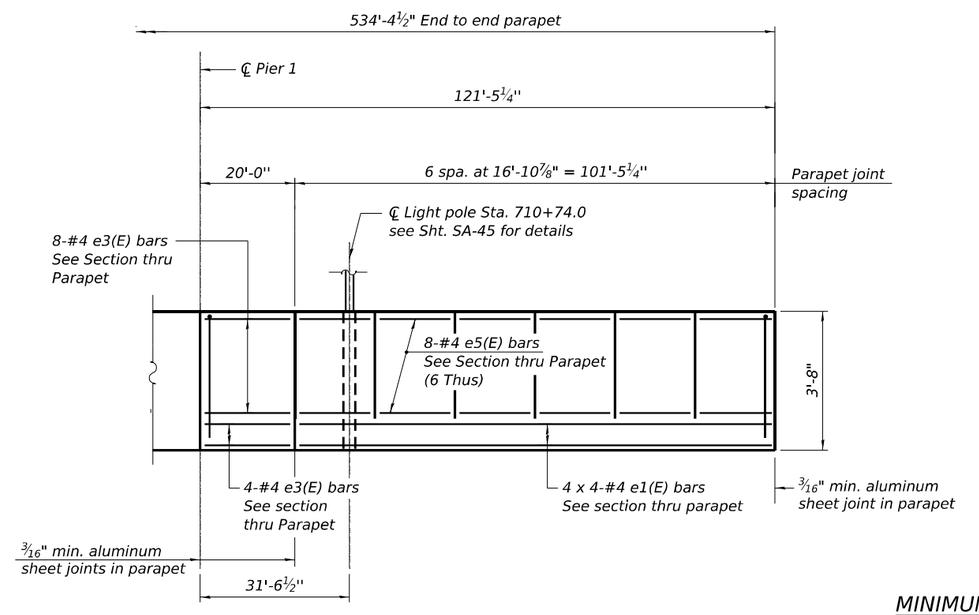

INSIDE ELEVATION OF SOUTH PARAPET - EB - II

(Looking South)

MINIMUM BAR LAP

(Parapet)

#4 bar = 2'-8"
#6 bar = 4'-0"

Notes:

1. Bars indicated thus 4 x 5-#4 etc. indicates 4 lines of bars with 5 lengths per line.
2. Dimensions are measured along the inside face of parapet.
3. For Section thru Parapet, see Sht. SA-44.
4. For Bar List, see Sht. SA-47.

MODEL: SHEET
FILE NAME: C:\TRANSYSTEMS\PW_LOCAL\TRANSYSTEMS-PW-01\DMS20864\0990902_0903-62F94-042-PARELEV4.DGN

10-27-2025, 16:48:19

exp.

USER NAME =	DESIGNED - BAR	REVISED -	
	CHECKED - KK	REVISED -	
PLOT SCALE =	DRAWN - HBJ	REVISED -	
PLOT DATE =	CHECKED - BAR	REVISED -	

STATE OF ILLINOIS
DEPARTMENT OF TRANSPORTATION

PARAPET ELEVATION 2
STRUCTURE NO. 099-0902 (EB)

SHEET SA-42 OF SA-112 SHEETS

F.A.I. RTE.	SECTION	COUNTY	TOTAL SHEETS	SHEET NO.
80	2017-057F	WILL	1342	706
		CONTRACT NO. 62F94		
	ILLINOIS	FED. AID PROJECT		

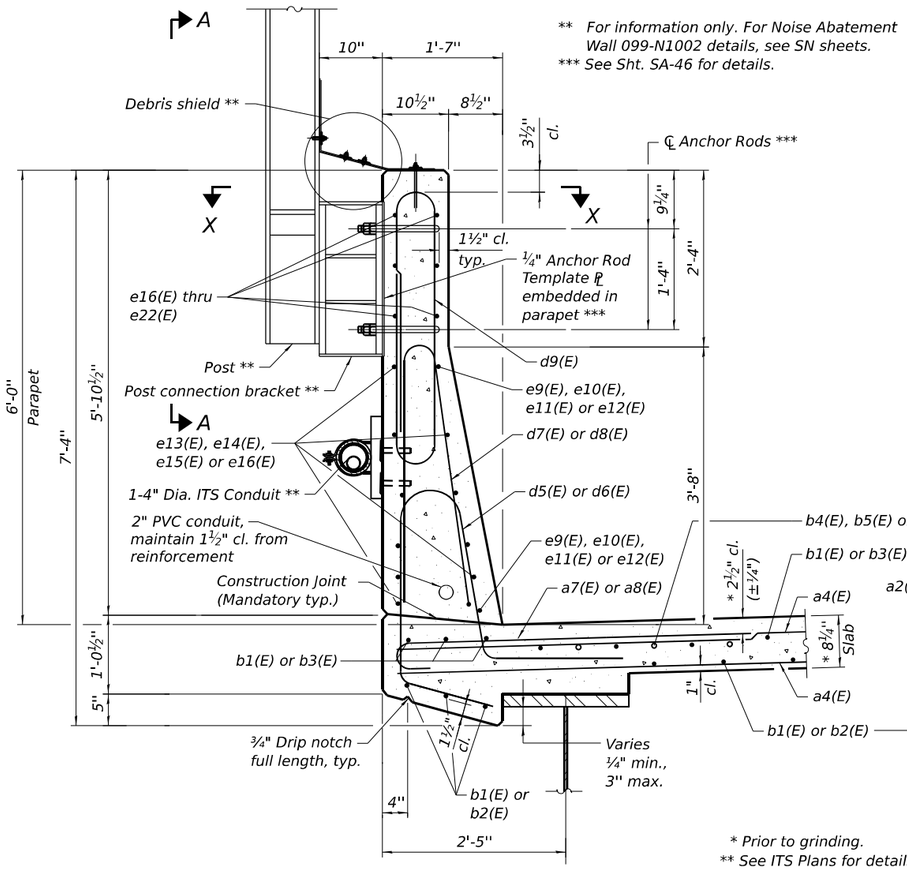

** For information only. For Noise Abatement Wall 099-N1002 details, see SN sheets.
*** See Sht. SA-46 for details.

SECTION THRU PARAPET - WB
(North Parapet)

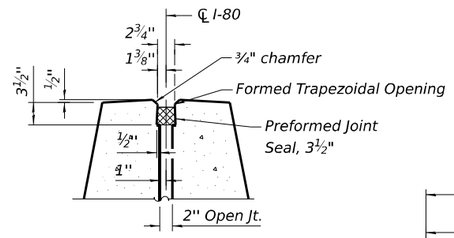

DETAIL A

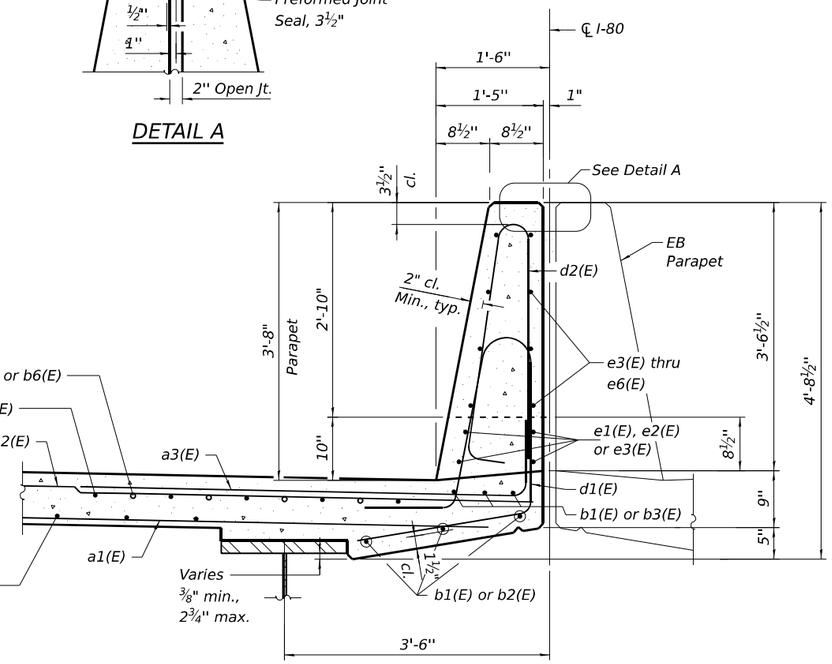

* Prior to grinding.
** See ITS Plans for details.

SECTION THRU PARAPET - WB
(South Parapet)

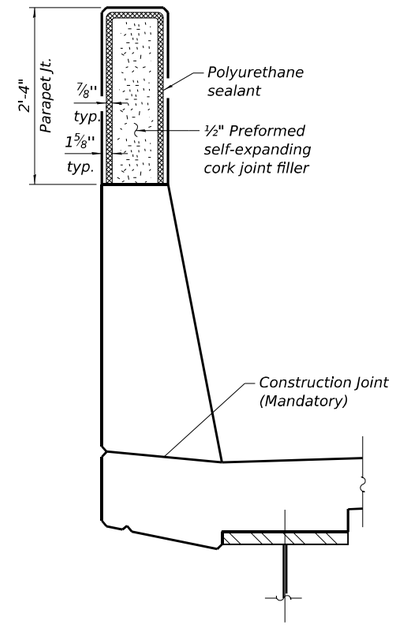

INTERIOR JOINT DETAIL - WB
(North Parapet)

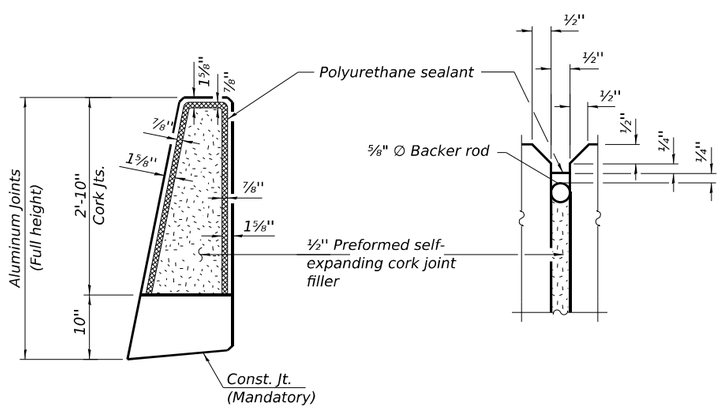

PARAPET JOINT DETAILS
(South Parapet)

Notes:

1. The $^{3}/_{16}$"minimum aluminum sheet shall be ASTM B 209 alloy 3003-H14 and coated with 5 mils of either bitumen paint or epoxy paint to minimize reaction with wet concrete. Cost included with Concrete Superstructure.
2. The polyurethane sealant shall be according to Article 1050.04 of the Standard Specifications and the color shall be gray.

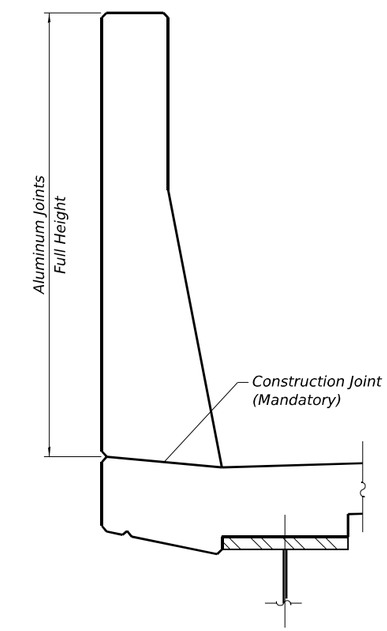

ALUMINUM JOINT DETAIL - WB
(North Parapet)

MODEL: SHEET
FILE NAME: C:\TRANSYSTEMS\PW_LOCAL\TRANSYSTEMS-PW-01\DMS20864\0990902_0903-62F94-043-DECKDET1.DGN
10-27-2025, 16:48:22

USER NAME =	DESIGNED - BAR	REVISED -	
	CHECKED - KK	REVISED -	
PLOT SCALE =	DRAWN - HBJ	REVISED -	
PLOT DATE =	CHECKED - BAR	REVISED -	

STATE OF ILLINOIS
DEPARTMENT OF TRANSPORTATION

DECK DETAILS 1
STRUCTURE NOS. 099-0902 (EB) & 099-0903 (WB)
SHEET SA-43 OF SA-112 SHEETS

F.A.I. RTE.	SECTION	COUNTY	TOTAL SHEETS	SHEET NO.
80	2017-057F	WILL	1342	707
		CONTRACT NO. 62F94		
	ILLINOIS	FED. AID PROJECT		

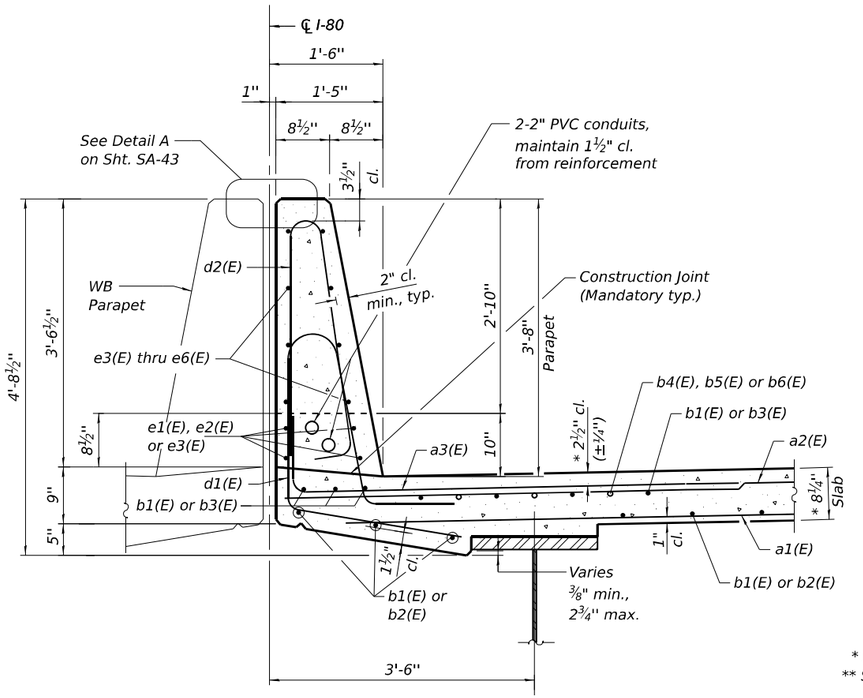

SECTION THRU PARAPET - EB

(North Parapet)

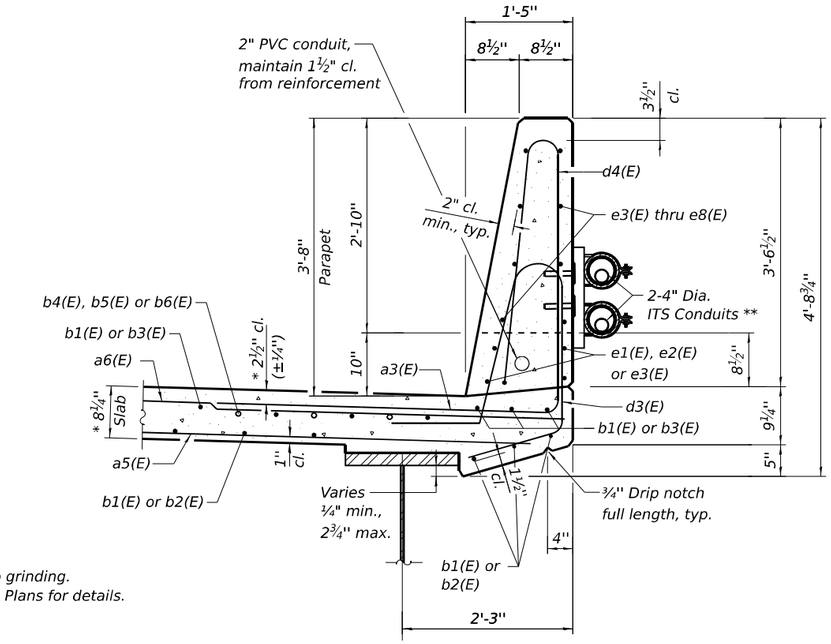

SECTION THRU PARAPET - EB

(South Parapet)

* Prior to grinding.
** See ITS Plans for details.

MODEL: SHEET
FILE NAME: C:\TRANSYSTEMS\PW_LOCAL\TRANSYSTEMS-PW-01\DMS20864\0990902_0903-62F94-044-DECKDET2.DGN

10-27-2025, 16:48:25

exp.	USER NAME =	DESIGNED - BAR	REVISED -	STATE OF ILLINOIS DEPARTMENT OF TRANSPORTATION	DECK DETAILS 2 STRUCTURE NOS. 099-0902 (EB) & 099-0903 (WB)
		CHECKED - KK	REVISED -		
	PLOT SCALE =	DRAWN - HBJ	REVISED -		
	PLOT DATE =	CHECKED - BAR	REVISED -		SHEET SA-44 OF SA-112 SHEETS

F.A.I. RTE.	SECTION	COUNTY	TOTAL SHEETS	SHEET NO.
80	2017-057F	WILL	1342	708
		CONTRACT NO. 62F94		
		ILLINOIS	FED. AID PROJECT	

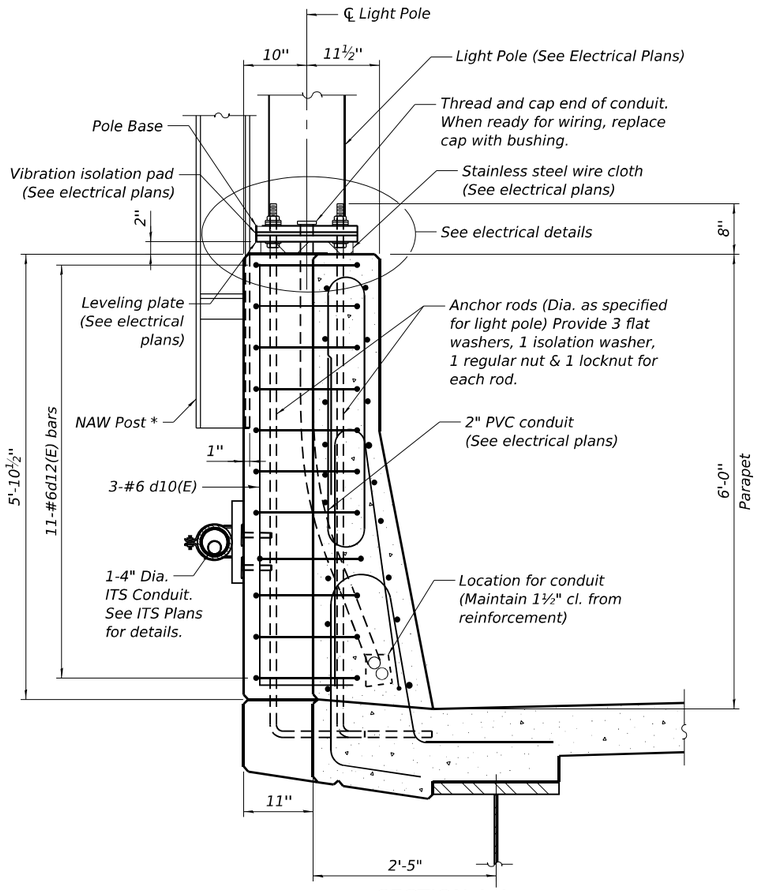

SECTION A-A

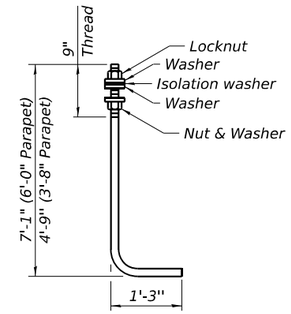

ANCHOR ROD

Diameter as specified for light poles. (ASTM F 1554 Grade 105) Full length hot dipped galvanized.

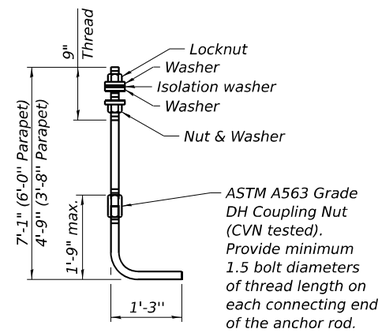

ALTERNATE ANCHOR ROD

Diameter as specified for light poles. (ASTM F 1554 Grade 105) Full length hot dipped galvanized.

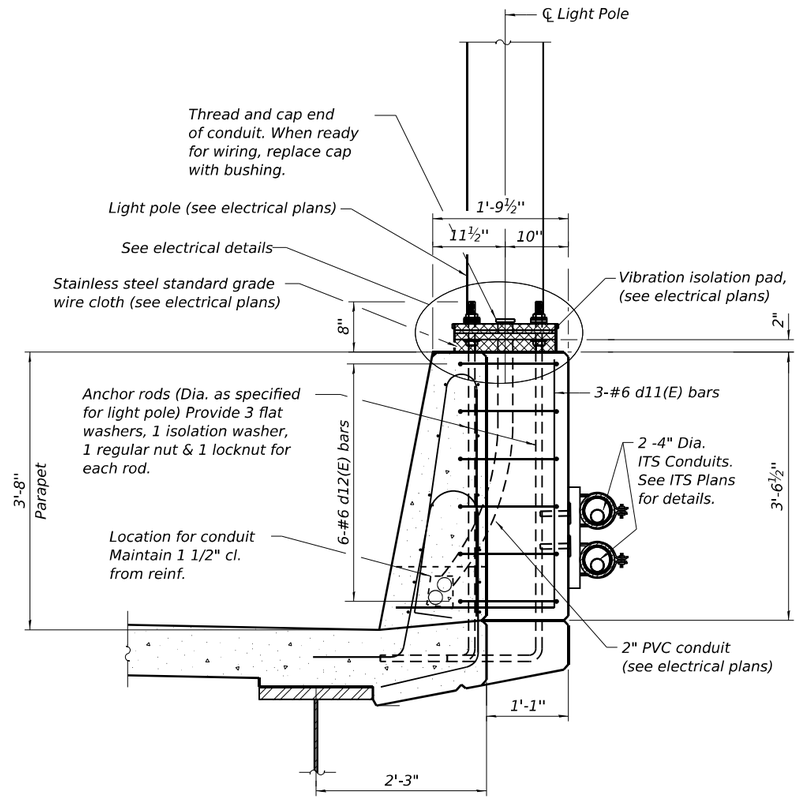

SECTION B-B

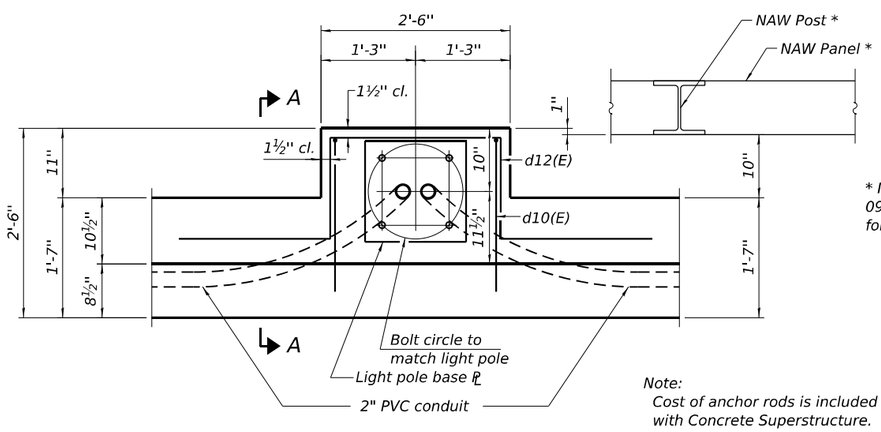

* Noise Abatement Walll 099-N1002. See SN sheets for details.

Note:
Cost of anchor rods is included with Concrete Superstructure.

LIGHT POLE PLAN - WB

(North Parapet - 3 Light Poles total)

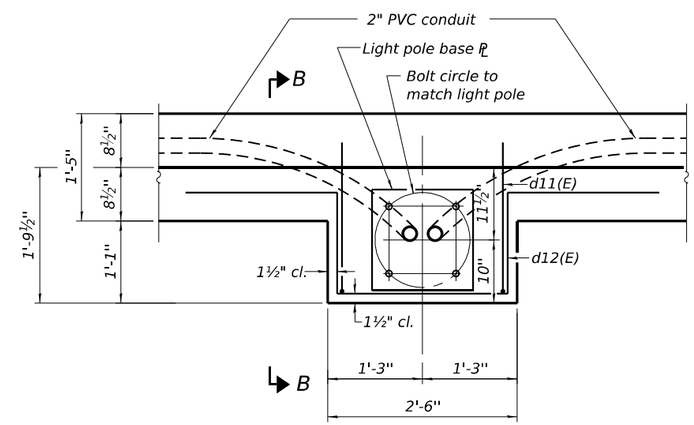

LIGHT POLE PLAN - EB

(South Parapet - 2 Light Poles total)

MODEL: SHEET
FILE NAME: C:\TRANSYSTEMS\PW_LOCAL\TRANSYSTEMS-PW-01\DMS20864\0990902_0903-62F94-045-DECKDET3.DGN

10-27-2025, 16:48:28

exp.

USER NAME =	DESIGNED - BAR	REVISED -	
	CHECKED - KK	REVISED -	
PLOT SCALE =	DRAWN - HBJ	REVISED -	
PLOT DATE =	CHECKED - BAR	REVISED -	

STATE OF ILLINOIS
DEPARTMENT OF TRANSPORTATION

DECK DETAILS 3
STRUCTURE NOS. 099-0902 (EB) & 099-0903 (WB)

SHEET SA-45 OF SA-112 SHEETS

F.A.I. RTE.	SECTION	COUNTY	TOTAL SHEETS	SHEET NO.
80	2017-057F	WILL	1342	709
		CONTRACT NO. 62F94		
	ILLINOIS	FED. AID PROJECT		

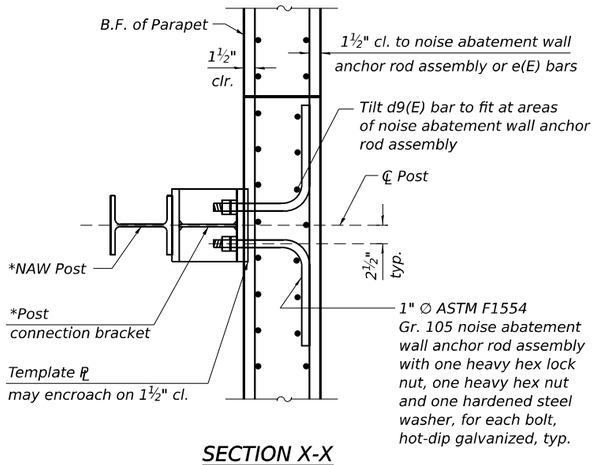

SECTION X-X

* For Noise Abatement Wall 099-N1002 details, see SN sheets.

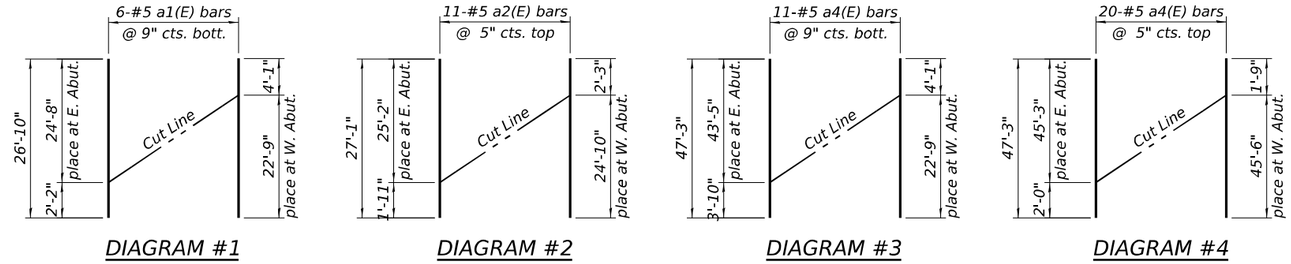

DIAGRAM #1 DIAGRAM #2 DIAGRAM #3 DIAGRAM #4

WB - FIELD CUTTING DIAGRAMS

For placement of bars, see Sht's. SA-31 & SA-33.

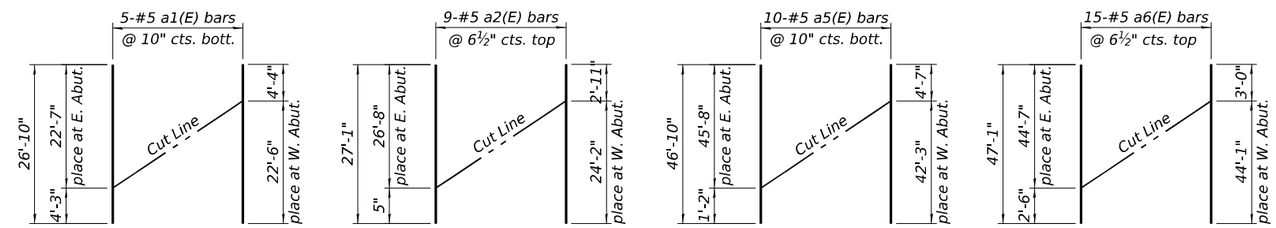

DIAGRAM #5 DIAGRAM #6 DIAGRAM #7 DIAGRAM #8

EB - FIELD CUTTING DIAGRAMS

For placement of bars, see Sht's. SA-34 & SA-36.

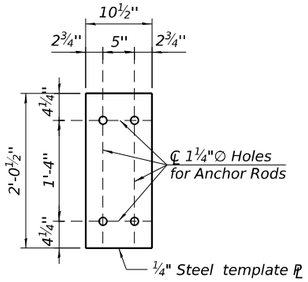

TEMPLATE PLATE FOR NOISE ABATEMENT WALL ANCHOR ROD ASSEMBLY

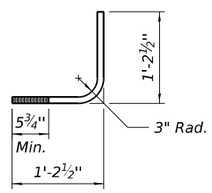

NOISE ABATEMENT WALL ANCHOR ROD ASSEMBLY

Notes:

1. Cost of four anchor rods, template plate and associated hardware included in the unit cost for one each of Noise Abatement Wall Anchor Rod Assembly.
2. For Noise Abatement Wall 099-N1002 details, see SN sheets.

MODEL: SHEET
FILE NAME: C:\TRANSYSTEMS\PW_LOCAL\TRANSYSTEMS-PW-01\DMS20864\0990902_0903-62F94-046-DECKDET4.DGN

10-27-2025, 16:48:30

exp.

USER NAME =	DESIGNED - BAR	REVISED -	
	CHECKED - KK	REVISED -	
PLOT SCALE =	DRAWN - HBJ	REVISED -	
PLOT DATE =	CHECKED - BAR	REVISED -	

STATE OF ILLINOIS
DEPARTMENT OF TRANSPORTATION

DECK DETAILS 4
STRUCTURE NOS. 099-0902 (EB) & 099-0903 (WB)

SHEET SA-46 OF SA-112 SHEETS

F.A.I. RTE.	SECTION	COUNTY	TOTAL SHEETS	SHEET NO.
80	2017-057F	WILL	1342	710
		CONTRACT NO. 62F94		
		ILLINOIS	FED. AID PROJECT	

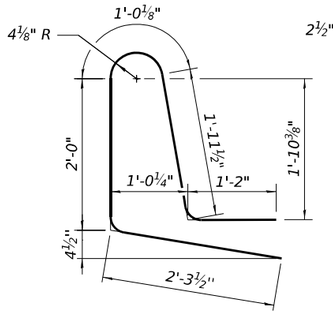

BAR d1(E)

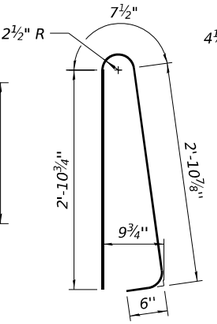

BAR d2(E)

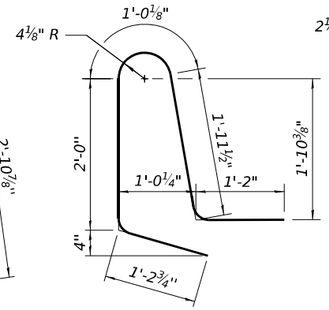

BAR d3(E)

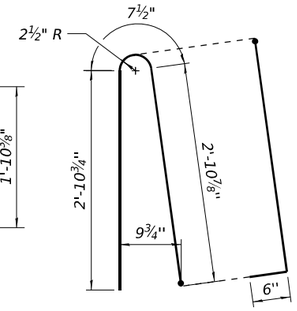

BAR d4(E)

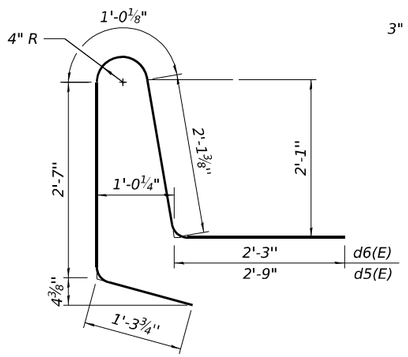

BARS d5(E) & d6(E)

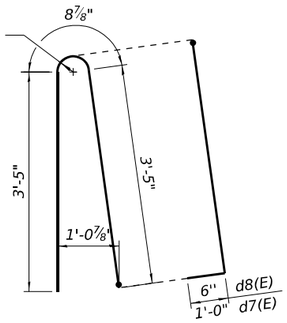

BARS d7(E) & d8(E)

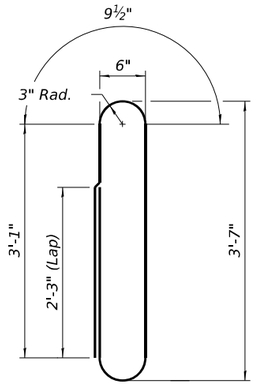

BAR d9(E)

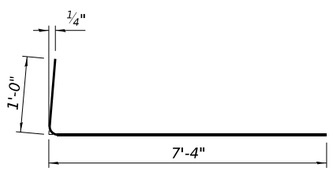

BAR a3(E)

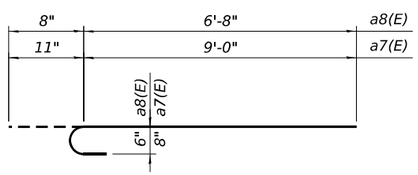

BAR a7(E) and a8(E)

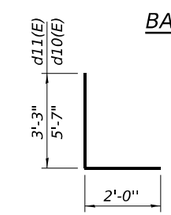

BARS d10(E) & d11(E)

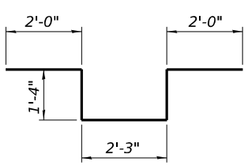

BAR d12(E)

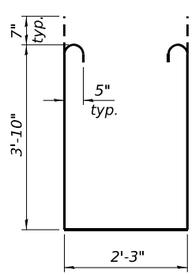

BAR s1(E)

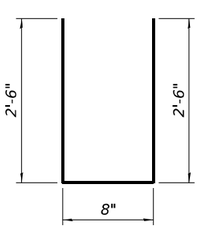

BAR u(E)

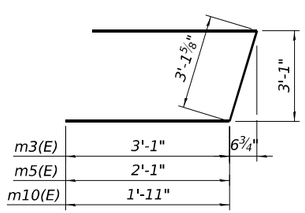

BARS m3(E), m5(E) & m10(E)

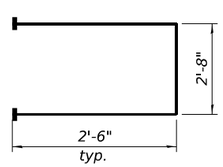

BAR s(E)

(Headed. 536-#5 Bar terminators *)

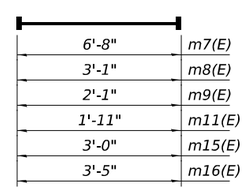

BARS m7(E), m8(E), m9(E), m11(E), m15(E) & m16(E)

(Headed. 324-#6 Bar terminators *)

* Bar terminators, paid for separately. See Total Bill of Material.

SUPERSTRUCTURE BILL OF MATERIAL - WB

Bar	No.	Size	Length	Shape
a1(E)	712	#5	26'-10"	
a2(E)	1282	#5	27'-1"	
a3(E)	1282	#6	8'-4"	
a4(E)	1994	#5	47'-3"	
a7(E)	606	#8	9'-11"	
a8(E)	677	#6	7'-4"	
a9(E)	4	#5	27'-6"	
a10(E)	8	#5	26'-0"	
b1(E)	2736	#5	30'-0"	
b2(E)	66	#5	31'-0"	
b3(E)	156	#5	17'-6"	
b4(E)	213	#6	36'-0"	
b5(E)	213	#6	37'-8"	
b6(E)	213	#6	34'-0"	
d1(E)	802	#5	8'-5"	
d2(E)	802	#5	6'-11"	
d5(E)	606	#6	9'-10"	
d6(E)	677	#5	9'-4"	
d7(E)	606	#6	8'-7"	
d8(E)	677	#5	8'-1"	
d9(E)	1283	#5	10'-0"	
d10(E)	9	#6	7'-7"	
d12(E)	33	#6	8'-11"	
e1(E)	16	#4	27'-6"	
e2(E)	56	#4	24'-9"	
e3(E)	72	#4	19'-8"	
e4(E)	96	#4	18'-2"	
e5(E)	48	#4	16'-7"	
e6(E)	40	#4	17'-10"	
e9(E)	12	#8	19'-8"	
e10(E)	6	#8	38'-0"	
e11(E)	16	#8	32'-0"	
e12(E)	6	#8	35'-0"	
e13(E)	40	#6	28'-6"	
e14(E)	80	#6	31'-0"	
e15(E)	30	#6	33'-0"	
e16(E)	132	#6	19'-8"	
e17(E)	30	#6	15'-2"	
e18(E)	18	#6	17'-10"	
e19(E)	6	#6	15'-8"	
e20(E)	18	#6	18'-2"	
e21(E)	24	#6	17'-8"	
e22(E)	6	#6	18'-7"	

SUPERSTRUCTURE BILL OF MATERIAL - WB

Bar	No.	Size	Length	Shape
m(E)	12	#6	27'-6"	
m1(E)	24	#6	26'-0"	
m2(E)	60	#6	6'-8"	
m3(E)	8	#6	9'-4"	
m4(E)	4	#4	27'-6"	
m5(E)	8	#6	7'-4"	
m6(E)	8	#4	25'-6"	
m7(E)	60	#6	6'-8"	
m8(E)	6	#6	3'-1"	
m9(E)	3	#6	2'-1"	
m13(E)	8	#6	3'-0"	
m14(E)	8	#6	3'-5"	
m15(E)	6	#6	3'-0"	
m16(E)	6	#6	3'-5"	
s(E)	134	#5	7'-8"	
s1(E)	134	#5	11'-1"	
u(E)	134	#4	5'-8"	

Item	Unit	Quantity
Concrete Superstructure	Cu Yd	1,340.4
Reinforcement Bars, Epoxy Coated	Pound	402,420
Noise Abatement Wall Anchor Rod Assembly	Each	21

SUPERSTRUCTURE BILL OF MATERIAL - EB

Bar	No.	Size	Length	Shape
a1(E)	642	#5	26'-10"	
a2(E)	987	#5	27'-1"	
a3(E)	1974	#6	8'-4"	
a5(E)	642	#5	46'-10"	
a6(E)	987	#5	47'-1"	
a9(E)	4	#5	27'-6"	
a10(E)	8	#5	26'-0"	
b1(E)	2736	#5	30'-0"	
b2(E)	66	#5	31'-0"	
b3(E)	156	#5	17'-6"	
b4(E)	213	#6	36'-0"	
b5(E)	213	#6	37'-8"	
b6(E)	213	#6	34'-0"	
d1(E)	802	#5	8'-5"	
d2(E)	802	#5	6'-11"	
d3(E)	802	#5	7'-8"	
d4(E)	802	#5	6'-11"	
d11(E)	6	#6	5'-3"	
d12(E)	12	#6	8'-11"	
e1(E)	32	#4	27'-6"	
e2(E)	112	#4	24'-9"	
e3(E)	144	#4	19'-8"	
e4(E)	144	#4	18'-2"	
e5(E)	96	#4	16'-7"	
e6(E)	80	#4	17'-10"	
e7(E)	40	#4	18'-11"	
e8(E)	8	#4	14'-4"	
m(E)	12	#6	27'-6"	
m1(E)	24	#6	26'-0"	
m2(E)	60	#6	6'-8"	
m3(E)	10	#6	9'-4"	
m4(E)	4	#4	27'-6"	
m6(E)	8	#4	25'-6"	
m7(E)	60	#6	6'-8"	
m8(E)	6	#6	3'-1"	
m10(E)	10	#6	7'-0"	
m11(E)	3	#6	1'-11"	
m13(E)	8	#6	3'-0"	
m14(E)	8	#6	3'-5"	
m15(E)	6	#6	3'-0"	
m16(E)	6	#6	3'-5"	
s(E)	134	#5	7'-8"	
s1(E)	134	#5	11'-1"	
u(E)	134	#4	5'-8"	

Item	Unit	Quantity
Concrete Superstructure	Cu Yd	1,270.4
Reinforcement Bars, Epoxy Coated	Pound	316,060

MODEL: SHEET
FILE NAME: C:\TRANSYSTEMS\PW_LOCAL\TRANSYSTEMS-PW-01\DMS20864\0990902_0903-62F94-047-SUPERDET1.DGN
10-27-2025, 16:48:33

exp.

USER NAME =	DESIGNED - BAR	REVISED -	
	CHECKED - KK	REVISED -	
PLOT SCALE =	DRAWN - HBJ	REVISED -	
PLOT DATE =	CHECKED - BAR	REVISED -	

STATE OF ILLINOIS
DEPARTMENT OF TRANSPORTATION

SUPERSTRUCTURE DETAILS
STRUCTURE NOS. 099-0902 (EB) & 099-0903 (WB)

SHEET SA-47 OF SA-112 SHEETS

F.A.I. RTE.	SECTION	COUNTY	TOTAL SHEETS	SHEET NO.
80	2017-057F	WILL	1342	711

CONTRACT NO. 62F94

ILLINOIS FED. AID PROJECT

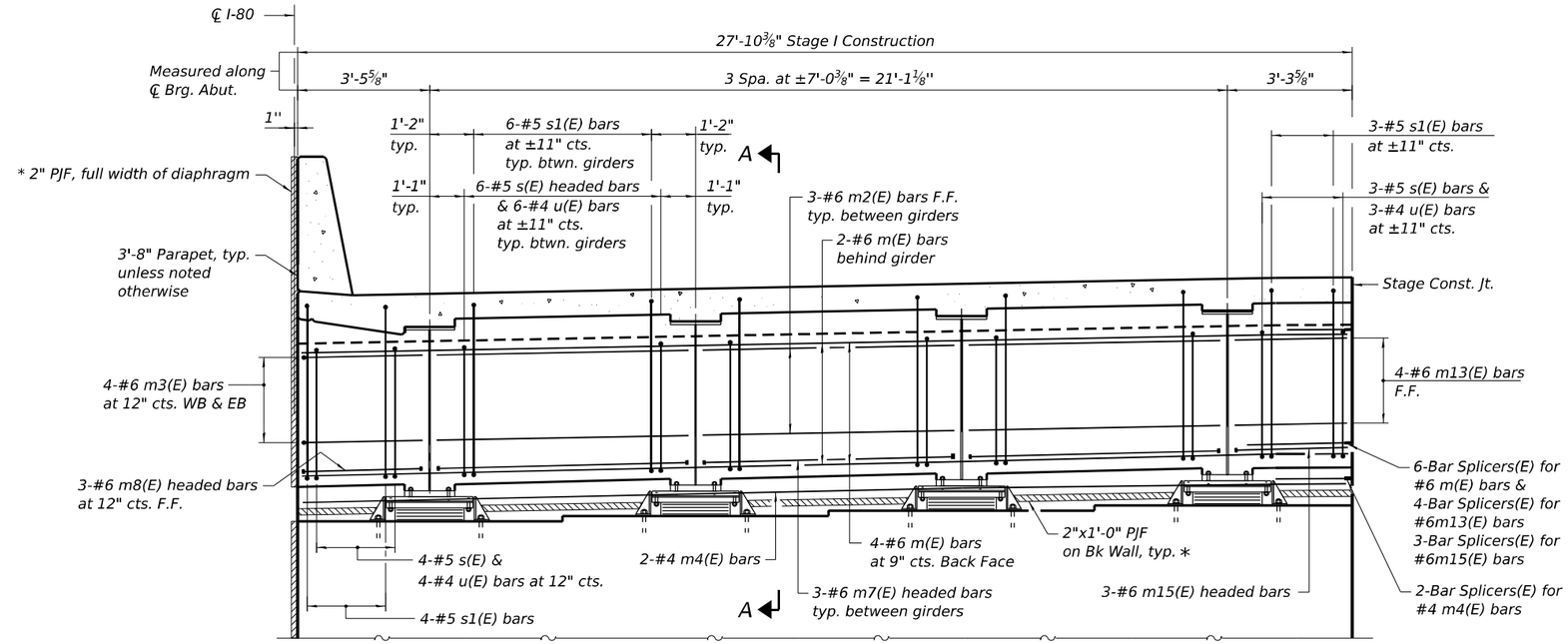

CONCRETE DIAPHRAGM ELEVATION AT WEST ABUTMENT - WB - STAGE I CONSTRUCTION

East Abutment - WB, West Abutment - EB & East Abutment - EB Diaphragms similar

MIN. BAR LAP

#4 bar = 2'-8"
#6 bar = 4'-0"

Notes:

1. Reinforcement bars in diaphragm are billed with superstructure on Sheet SA-47.
2. Concrete in diaphragm is included with Concrete Superstructure on Sheet SA-47.
3. The s(E), s1(E) and u(E) bars shall be placed parallel to the beams. Spacing for these bars shall be at right angles to the beams.
4. Provide 2" PJF (per Article 1051.09 of the Standard Specifications) full width and vertically at edges bonded to abutment cap with suitable adhesive as recommended by supplier.
5. For Section A-A, see Sht. SA-49.
6. For Bar Splicer details, see Sheet SA-92.
7. Bars indicated thus 2 x 3-#4 etc. indicates 2 lines of bars with 3 lengths per line.

* Cost included with Concrete Superstructure.

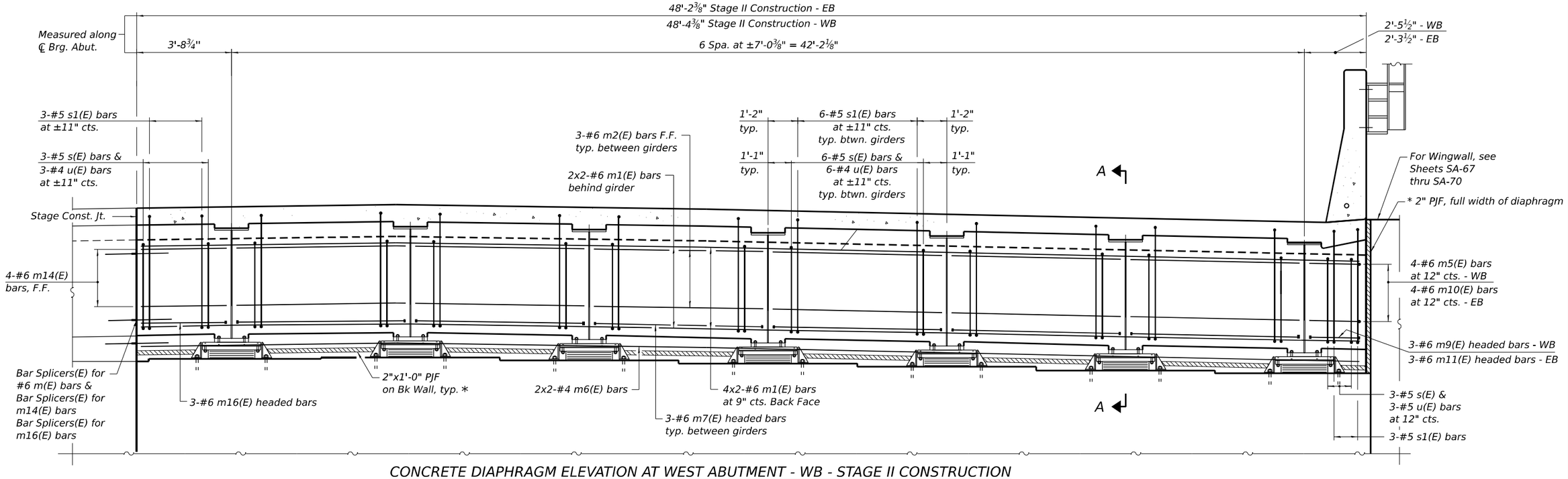

CONCRETE DIAPHRAGM ELEVATION AT WEST ABUTMENT - WB - STAGE II CONSTRUCTION

East Abutment - WB, West Abutment - EB & East Abutment - EB Diaphragms similar

MODEL: SHEET
FILE NAME: C:\TRANSYSTEMS\PW_LOCAL\TRANSYSTEMS-PW-01\DMS20864\0990902_0903-62F94-048-ABUTDIA1.DGN

10-27-2025, 16:48:35

exp.

USER NAME =	DESIGNED - BAR	REVISED -	
	CHECKED - KK	REVISED -	
PLOT SCALE =	DRAWN - HBJ	REVISED -	
PLOT DATE =	CHECKED - BAR	REVISED -	

STATE OF ILLINOIS
DEPARTMENT OF TRANSPORTATION

ABUTMENT DIAPHRAGM DETAILS 1
STRUCTURE NOS. 099-0902 (EB) & 099-0903 (WB)

SHEET SA-48 OF SA-112 SHEETS

F.A.I. RTE.	SECTION	COUNTY	TOTAL SHEETS	SHEET NO.
80	2017-057F	WILL	1342	712
		CONTRACT NO. 62F94		
		ILLINOIS	FED. AID PROJECT	

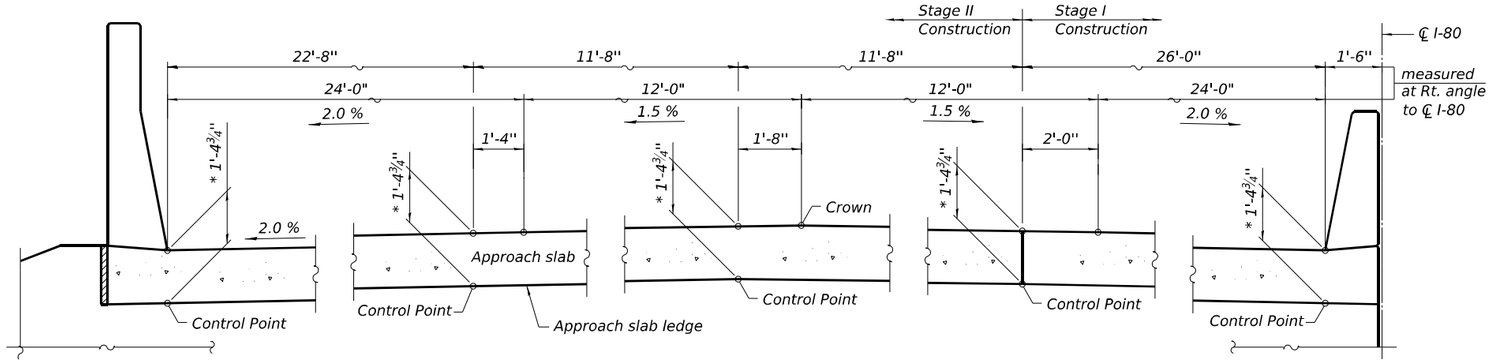

* Prior to grinding.

DETAIL OF APPROACH SLAB LEDGE - WEST ABUTMENT - WB

(Looking East at back of abutment)

Approach Slab Ledge - East Abutment - WB & West and East Abutments - EB similar

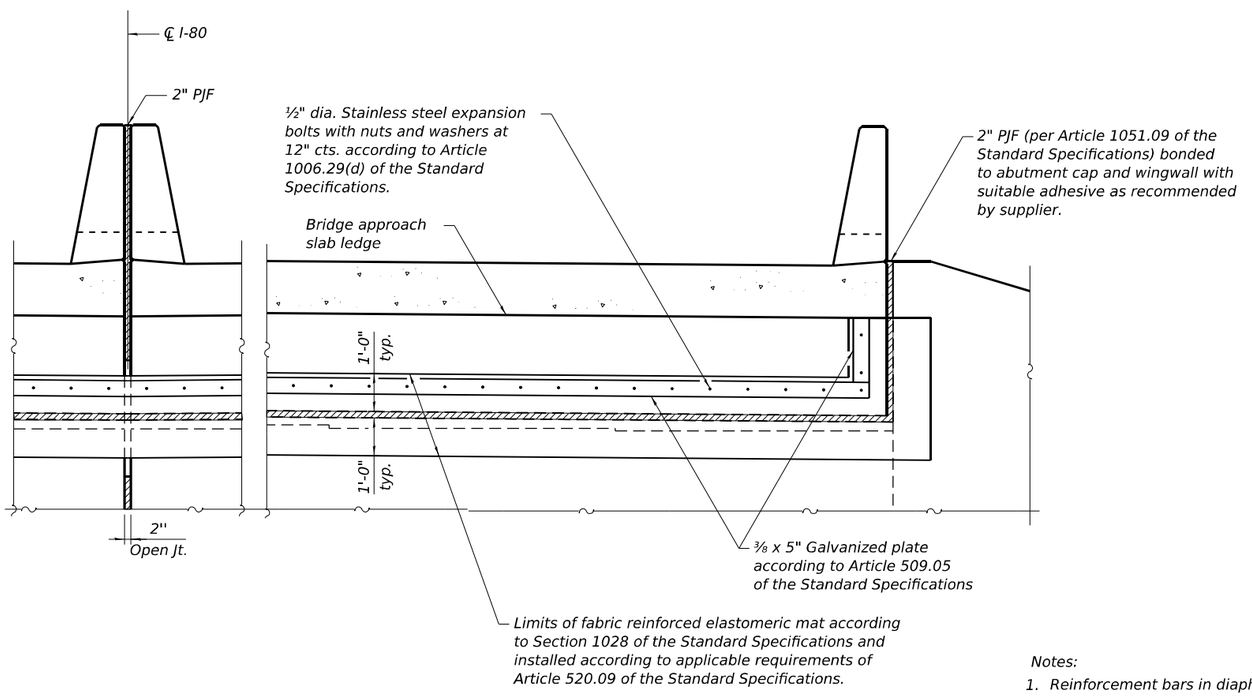

Note:
Cost of fabric reinforced elastomeric mat, galvanized plate, stainless steel expansion bolts with nuts and washers and installation are included in the cost of Concrete Superstructure.

ABUTMENT JOINT DETAILS - ELEVATION

(Looking East at back of abutment, west Abut. shown)

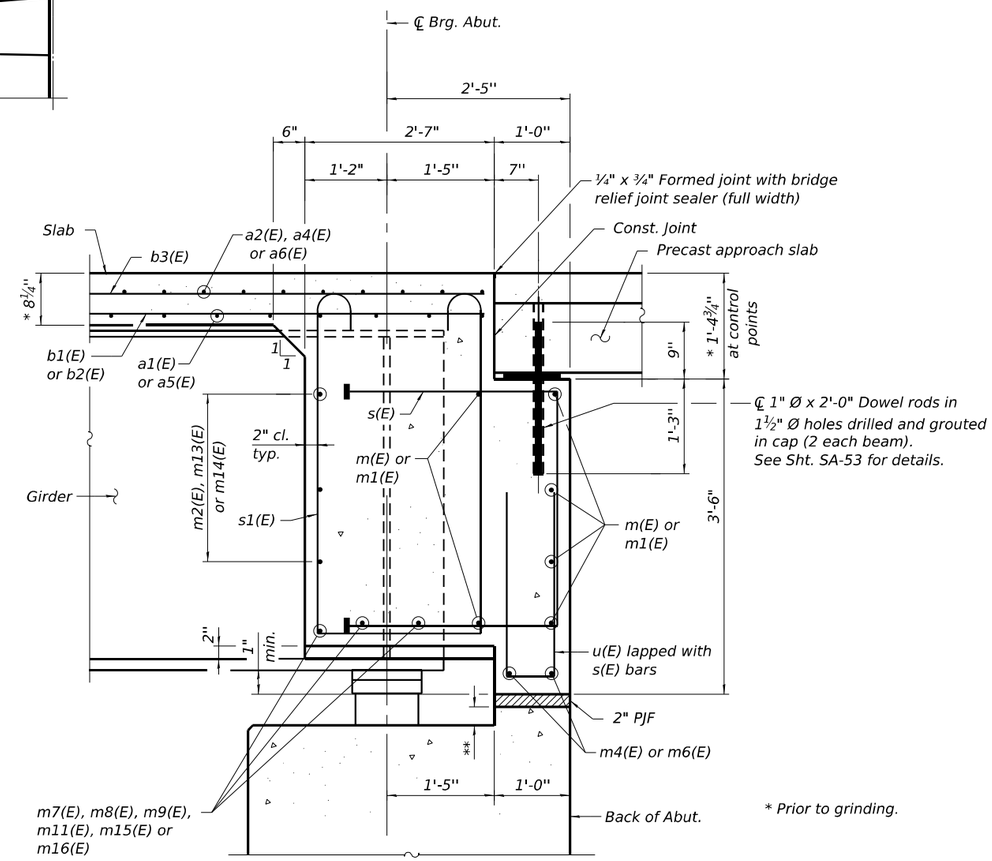

* Prior to grinding.

SECTION A-A

Dimensions at right angles to abutment, except as shown.

Notes:

1. Reinforcement bars in diaphragm are billed with superstructure on Sheet SA-47.
2. Concrete in diaphragm is included with Concrete Superstructure on Sheet SA-47.
3. The s(E), s1(E) and u(E) bars shall be placed parallel to the beams. Spacing for these bars shall be at right angles to the beams.
4. For Bar Splicer details, see Sheet SA-92.

** Varies, see Sheets SA-67, SA-68, SA-69 or SA-70.

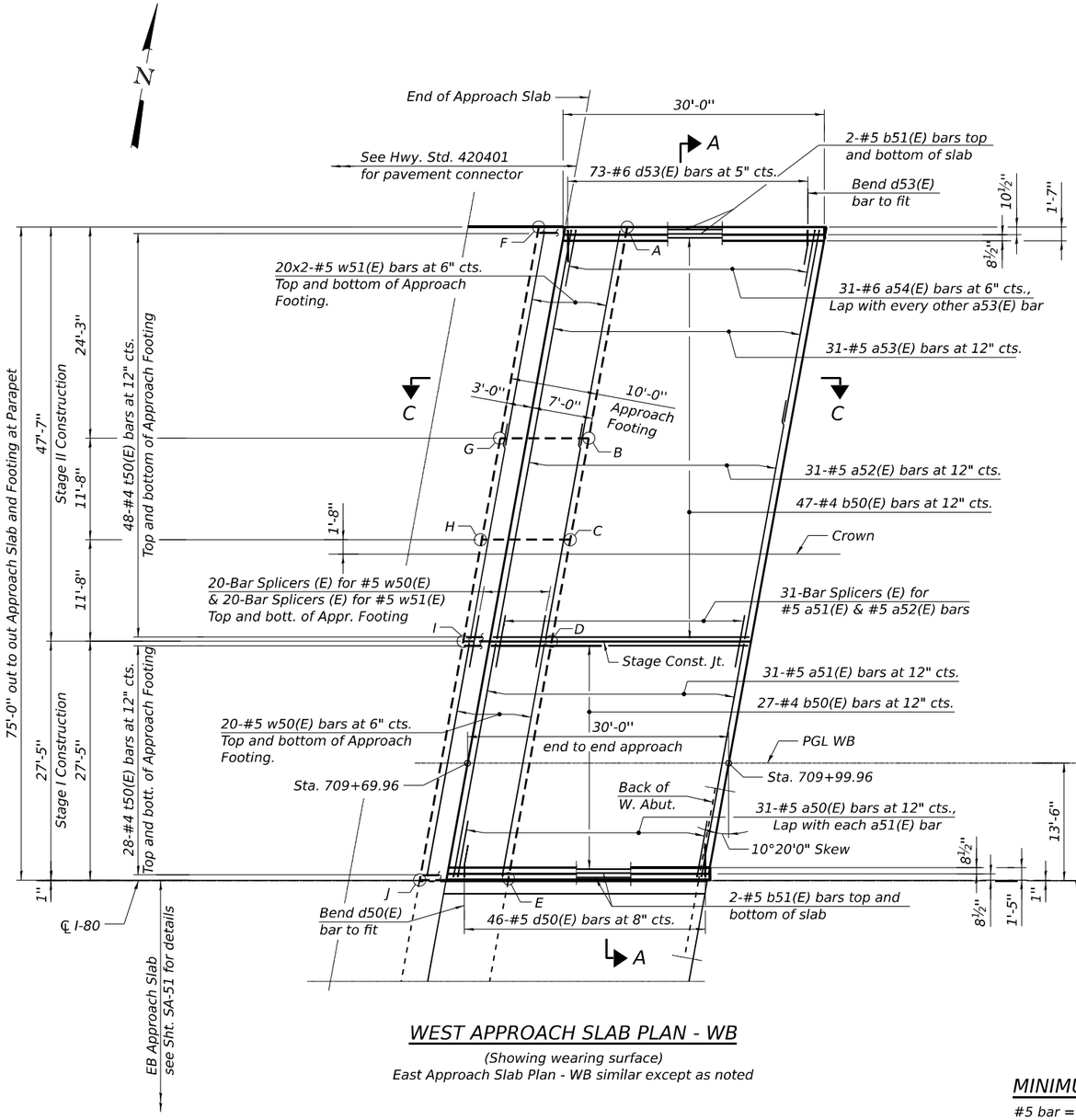

WEST APPROACH SLAB PLAN - WB

(Showing wearing surface)
East Approach Slab Plan - WB similar except as noted

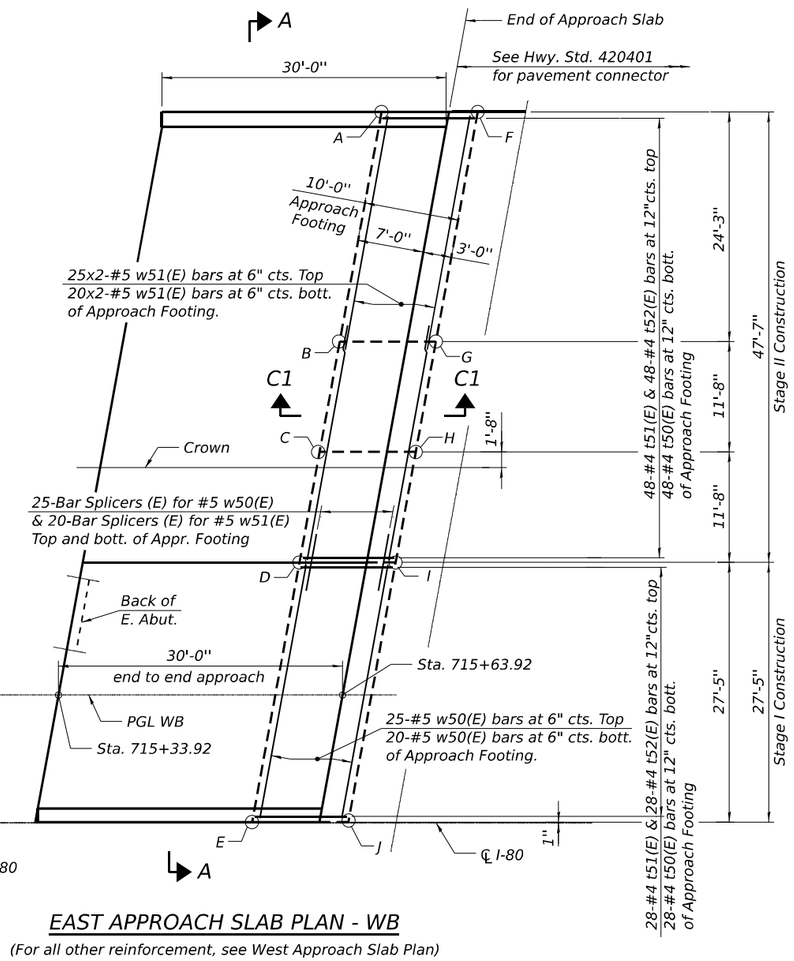

EAST APPROACH SLAB PLAN - WB

(For all other reinforcement, see West Approach Slab Plan)

MINIMUM BAR LAP

#5 bar = 3'-0" (typ.)
#5 bar = 3'-2" (approach footing)

Notes:

1. For section A-A, see Sht. SA-52.
2. For Section B-B, see Sht SA-52.
3. For Sections C-C & C1-C1, see Sht. SA-53.
4. For Bar Splicer details, see Sht. SA-92.
5. For Modified Strip Seal Joint, see Sht. SA-58.

TOP AND BOTTOM ELEVATIONS FOR APPROACH FOOTING - WB

West Approach			East Approach		
Point/ Location	Top	Bottom	Point/ Location	Top	Bottom
A - NE	576.55	575.71	A - NW	574.70	573.49
B - NE MID	576.98	576.14	B - NW MID	575.26	574.05
C - SE MID	577.13	576.30	C - SW MID	575.48	574.27
D - E SL	576.98	576.15	D - W SL	575.40	574.19
E - E CL	576.38	575.55	E - W CL	574.95	573.74
F - NW	576.42	575.59	F - NE	574.14	573.30
G - NW MID	576.85	576.02	G - NE MID	574.70	573.87
H - SW MID	577.01	576.17	H - SE MID	574.92	574.09
I - W SL	576.85	576.02	I - E SL	574.84	574.00
J - W CL	576.25	575.42	J - E CL	574.39	573.56

MODEL: SHEET
FILE NAME: C:\TRANSYSTEMS\PW_LOCAL\TRANSYSTEMS-PW-01\DMS20864\0990902_0903-62F94-050-APPR1.DGN

10-27-2025, 16:48:42

exp.

USER NAME =	DESIGNED - BAR	REVISED -	
	CHECKED - KK	REVISED -	
PLOT SCALE =	DRAWN - HBJ	REVISED -	
PLOT DATE =	CHECKED - BAR	REVISED -	

STATE OF ILLINOIS
DEPARTMENT OF TRANSPORTATION

PRECAST BRIDGE APPROACH SLAB PLAN
STRUCTURE NO. 099-0903 (WB)

SHEET SA-50 OF SA-112 SHEETS

F.A.I. RTE.	SECTION	COUNTY	TOTAL SHEETS	SHEET NO.
80	2017-057F	WILL	1342	714
		CONTRACT NO. 62F94		
		ILLINOIS	FED. AID PROJECT	

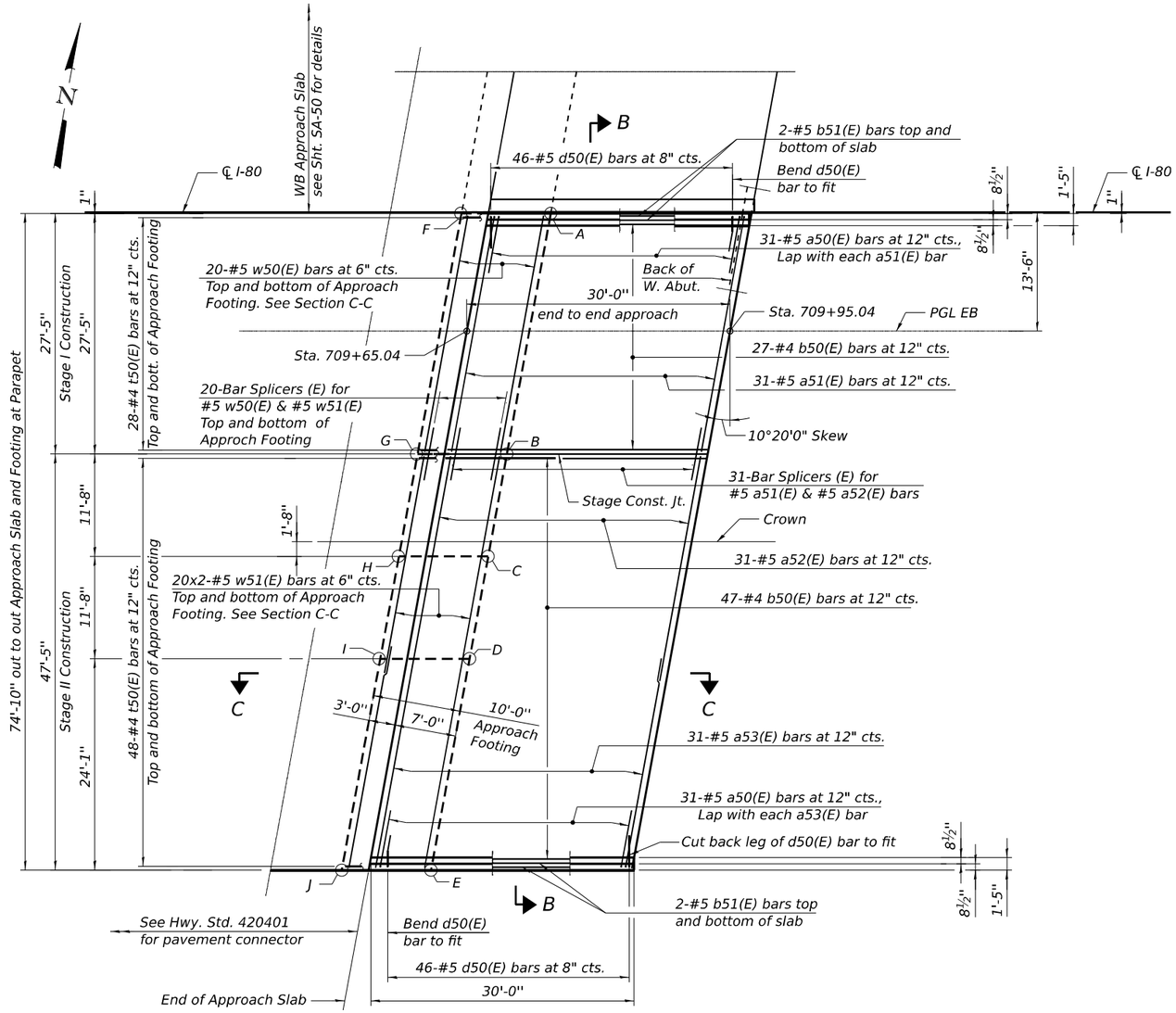

WEST APPROACH SLAB PLAN - EB

(Showing wearing surface)
East Approach Slab Plan - EB similar, except as noted

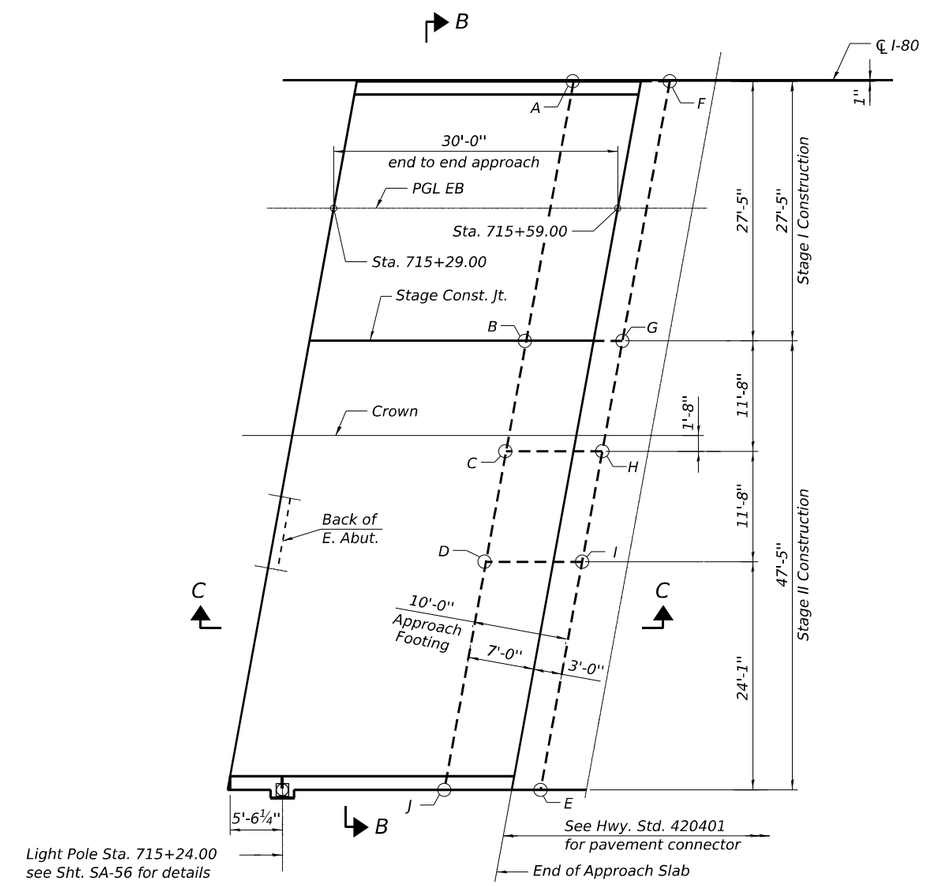

EAST APPROACH SLAB PARTIAL PLAN - EB

(For reinforcement, see West Approach Slab Plan)

MINIMUM BAR LAP

#5 bar = 3'-0" (typ.)
#5 bar = 3'-2" (approach footing)

TOP AND BOTTOM ELEVATIONS FOR APPROACH FOOTING - EB

West Approach			East Approach		
Point/ Location	Top	Bottom	Point/ Location	Top	Bottom
A - NE	576.38	575.55	A - NW	574.95	574.11
B - NE MID	576.86	576.02	B - NW MID	575.57	574.74
C - SE MID	576.95	576.12	C - SW MID	575.73	574.90
D - E SL	576.74	575.91	D - W SL	575.59	574.75
E - E CL	576.21	575.37	E - W CL	575.18	574.35
F - NW	576.25	575.42	F - NE	574.77	573.93
G - NW MID	576.72	575.89	G - NE MID	575.39	574.56
H - SW MID	576.82	575.99	H - SE MID	575.56	574.72
I - W SL	576.61	575.78	I - E SL	575.41	574.58
J - W CL	576.07	575.23	J - E CL	575.01	574.17

Note:
For Notes, see Sht. SA-50.

MODEL: SHEET
FILE NAME: C:\TRANSYSTEMS\PW_LOCAL\TRANSYSTEMS-PW-01\DMS20864\0990902_0903-62F94-051-APPR2.DGN

10-27-2025, 16:48:44

exp.

USER NAME =	DESIGNED - BAR	REVISED -	
	CHECKED - KK	REVISED -	
PLOT SCALE =	DRAWN - HBJ	REVISED -	
PLOT DATE =	CHECKED - BAR	REVISED -	

STATE OF ILLINOIS
DEPARTMENT OF TRANSPORTATION

PRECAST BRIDGE APPROACH SLAB PLAN
STRUCTURE NO. 099-0902 (EB)

SHEET SA-51 OF SA-112 SHEETS

F.A.I. RTE.	SECTION	COUNTY	TOTAL SHEETS	SHEET NO.
80	2017-057F	WILL	1342	715
		CONTRACT NO. 62F94		
	ILLINOIS	FED. AID PROJECT		

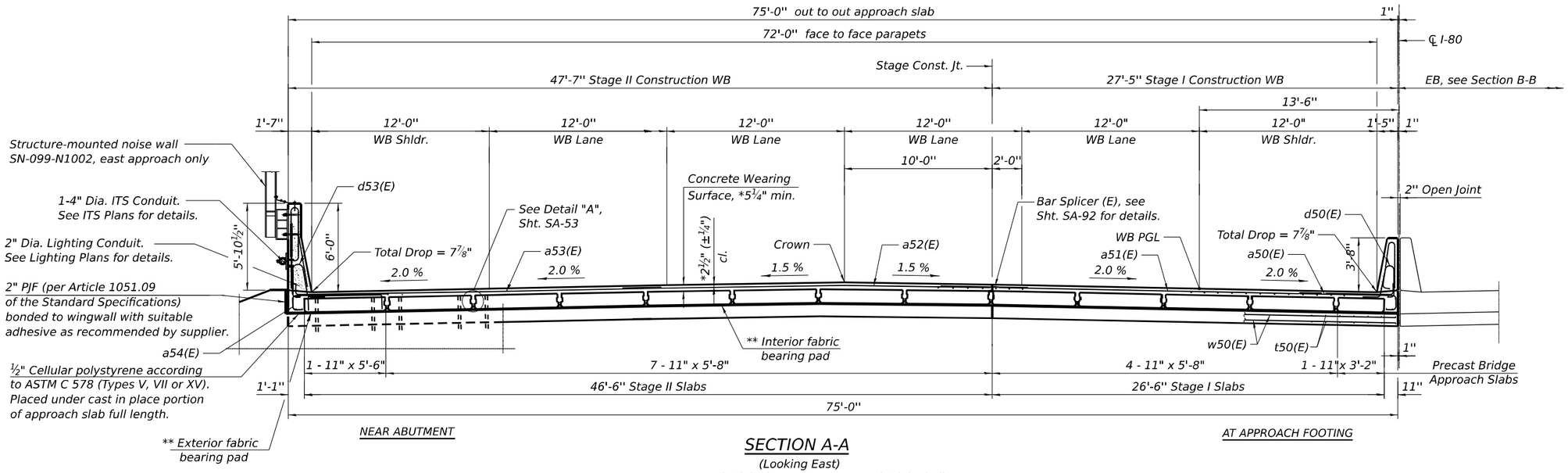

SECTION A-A

(Looking East)
West Approach Slab shown, East Approach Slab similar

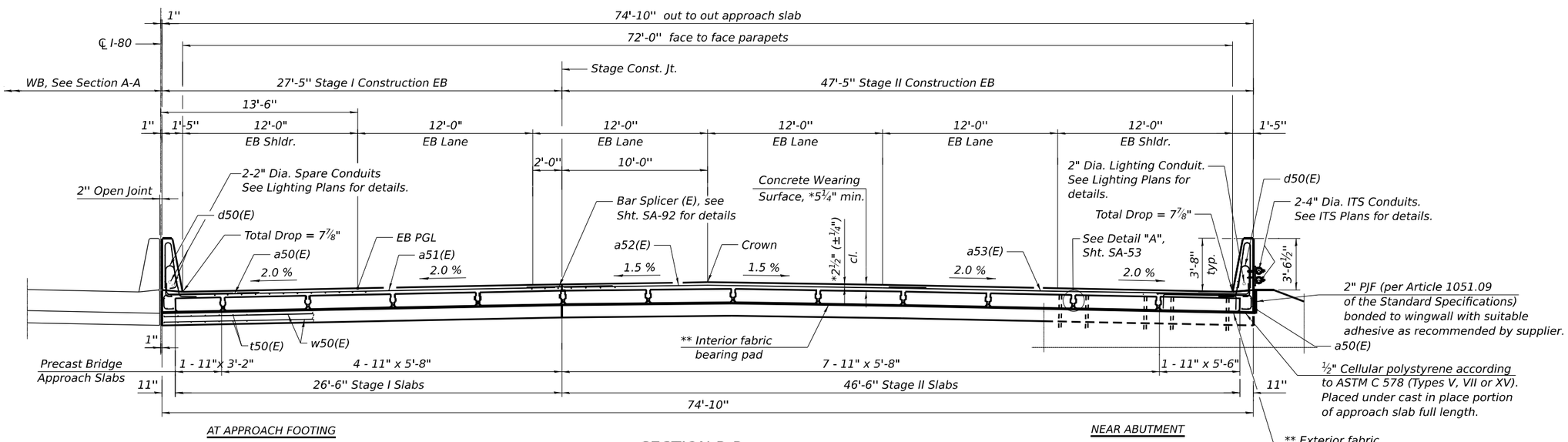

SECTION B-B

(Looking East)
West Approach Slab shown, East Approach Slab similar

* Prior to grinding

** Fabric bearing pads at the expansion end shall be recessed ¼" into the approach footing and bonded. Adjusting shims, when required, shall be bonded to the top of the fabric bearing pads.

MODEL: SHEET
FILE NAME: C:\TRANSYSTEMS\PW_LOCAL\TRANSYSTEMS-PW-01\DMS20864\0990902_0903-62F94-052-APRDET1.DGN

10-27-2025, 16:48:48

exp.

USER NAME =	DESIGNED - BAR	REVISED -	
	CHECKED - KK	REVISED -	
PLOT SCALE =	DRAWN - HBJ	REVISED -	
PLOT DATE =	CHECKED - BAR	REVISED -	

STATE OF ILLINOIS
DEPARTMENT OF TRANSPORTATION

PRECAST BRIDGE APPROACH SLAB DETAILS 1
STRUCTURE NOS. 099-0902 (EB) & 099-0903 (WB)

SHEET SA-52 OF SA-112 SHEETS

F.A.I. RTE.	SECTION	COUNTY	TOTAL SHEETS	SHEET NO.
80	2017-057F	WILL	1342	716
		CONTRACT NO. 62F94		
		ILLINOIS	FED. AID PROJECT	

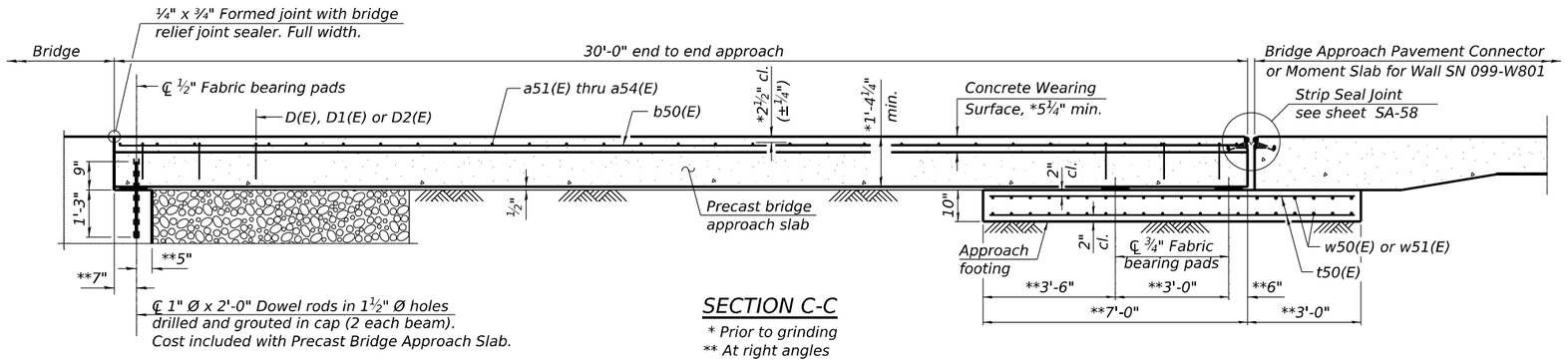

SECTION C-C

* Prior to grinding
** At right angles

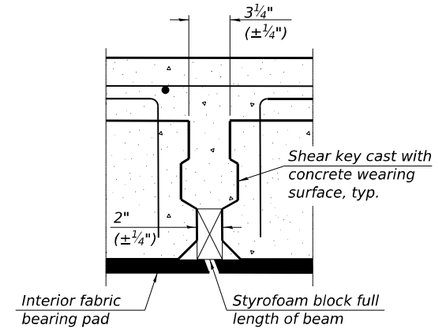

DETAIL "A"

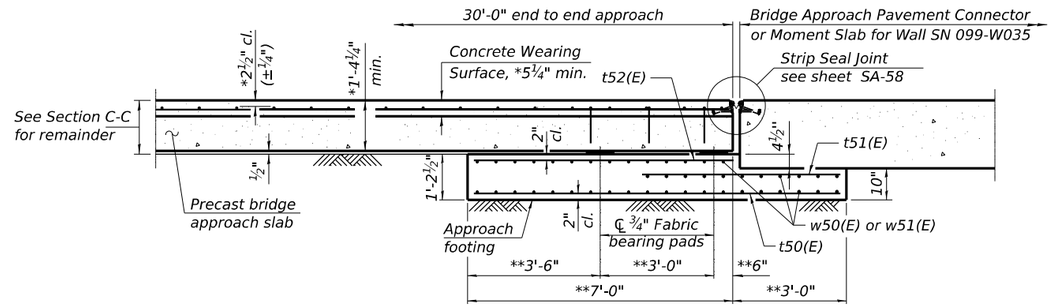

* Prior to grinding
** At right angles

SECTION C1-C1

(WB East Approach only)

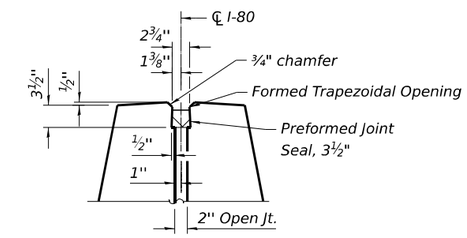

DETAIL B

***For information only.
For Noise Abatement Wall 099-N1002 details, see SN sheets.

Legend:

aa: 2" PJF (per Article 1051.09 of the Standard Specifications) bonded to wingwall with suitable adhesive as recommended by supplier.

bb: ½" Cellular polystyrene according to ASTM C 578 (Types V, VII or XV). Placed under cast in place portion of approach slab full length.

cc: 1" Ø x 2'-0" Dowel rods in 1½" Ø holes (at abutment).

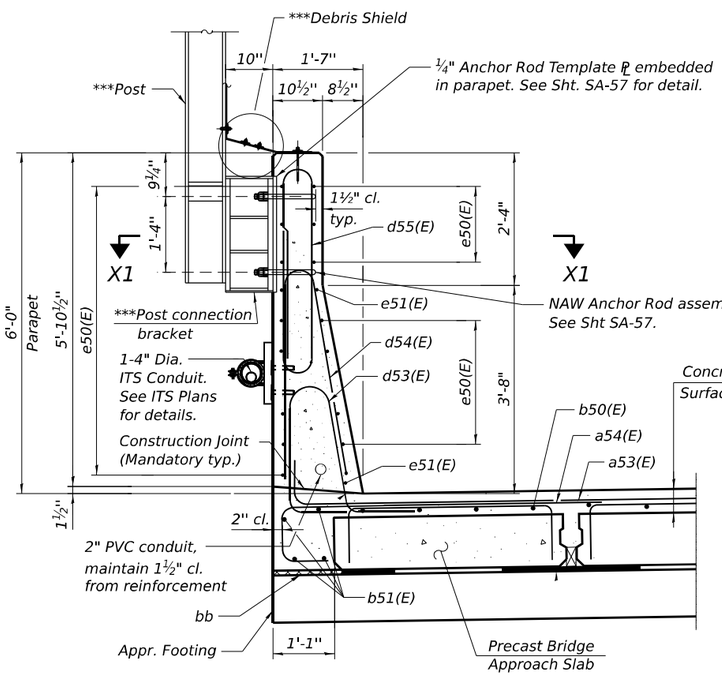

SECTION THRU EXTERIOR CONCRETE PARAPET - WB

(At Approach Footing)

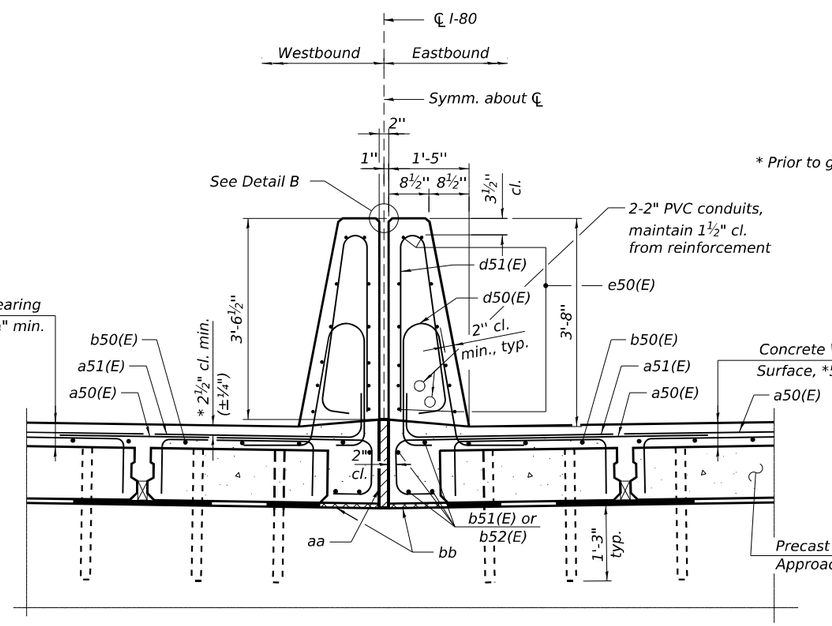

* Prior to grinding.

SECTION THRU INTERIOR CONCRETE PARAPETS

(Near Abutment)

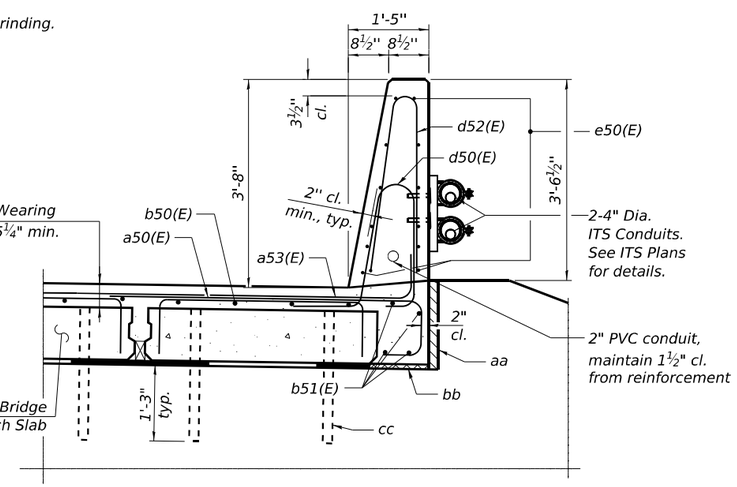

SECTION THRU EXTERIOR CONCRETE PARAPET - EB

(Near Abutment)

Note:
For Notes, see sheet SA-57.

MODEL: SHEET
FILE NAME: C:\TRANSYSTEMS\PW_LOCAL\TRANSYSTEMS-PW-01\DMS20864\0990902_0903-62F94-053-APPRDET2.DGN

10-27-2025, 16:48:50

exp.	USER NAME =	DESIGNED - BAR	REVISED -
		CHECKED - KK	REVISED -
	PLOT SCALE =	DRAWN - HBJ	REVISED -
	PLOT DATE =	CHECKED - BAR	REVISED -

STATE OF ILLINOIS
DEPARTMENT OF TRANSPORTATION

PRECAST BRIDGE APPROACH SLAB DETAILS 2
STRUCTURE NOS. 099-0902 (EB) & 099-0903 (WB)

SHEET SA-53 OF SA-112 SHEETS

F.A.I. RTE.	SECTION	COUNTY	TOTAL SHEETS	SHEET NO.
80	2017-057F	WILL	1342	717
		CONTRACT NO. 62F94		
		ILLINOIS	FED. AID PROJECT	

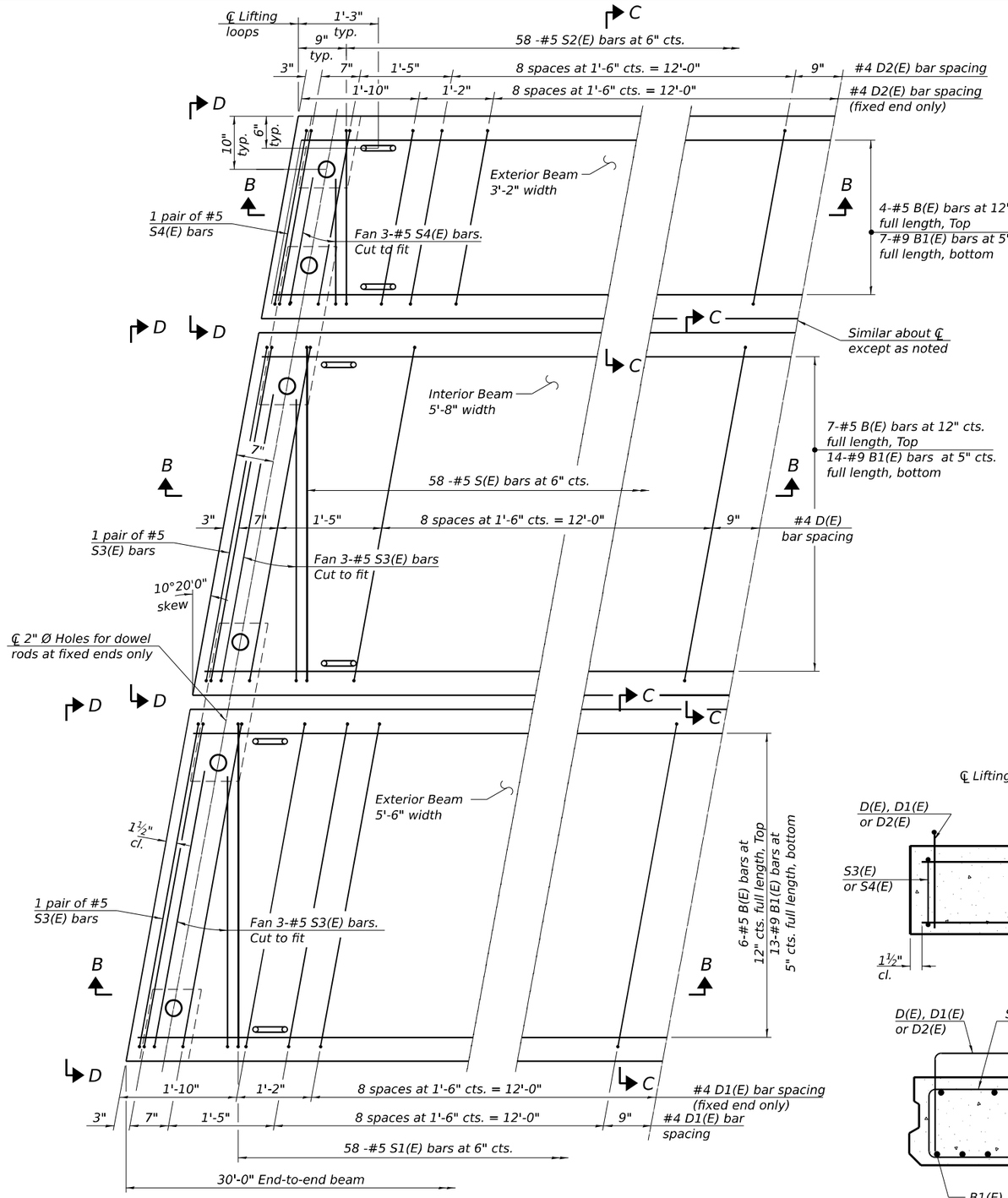

PLAN VIEW

(showing precast bridge approach beams)
(Spacing of D(E) and D1(E) bars may be adjusted up to 3" to miss the dowel rod holes and the lifting loops at the beam ends)

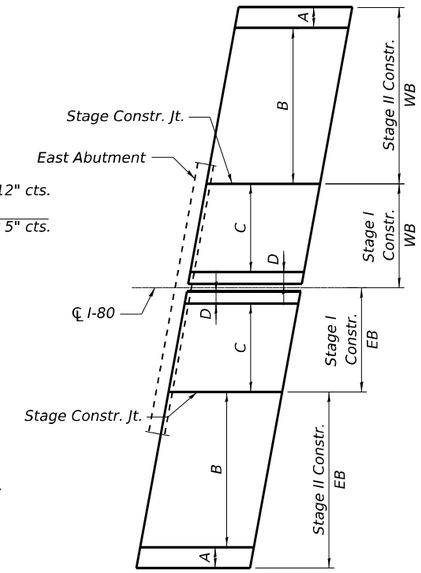

KEY PLAN

Approach Slabs at East Abutment - shown
Approach Slabs at West Abutment - similar

Notes:

The precast bridge approach slab shall be according to Section 504 of the Standard Specifications and shall be paid for at the contract unit price per square foot for Precast Bridge Approach Slab.

Cast-in-place substitution of Precast Bridge Approach Slab is not allowed.

The top surface of precast bridge approach slabs shall be finished similar to precast prestressed deck beams with concrete wearing surface as specified in the IDOT "Manual for Fabrication of Precast Prestressed Concrete Products."

Two ⅛" fabric adjusting shims of the dimensions of the exterior bearing pad shall be provided for each bearing pad location. Cost included with Precast Bridge Approach Slab.

A minimum 2 ½" Ø lifting pins shall be used to engage the lifting loops during handling.

Compressive strength of precast concrete, f'c shall be 6,000 psi.

Compressive strength of precast concrete during initial lifting, f'ci shall be 5,000 psi.

Legend:

A: 1 - 11"x 5'-6" Exterior precast beam
B: 7 - 11"x 5'-8" Interior precast beams
C: 4 - 11"x 5'-8" Interior precast beams
D: 1 - 11" x 3'-2" Exterior precast beam

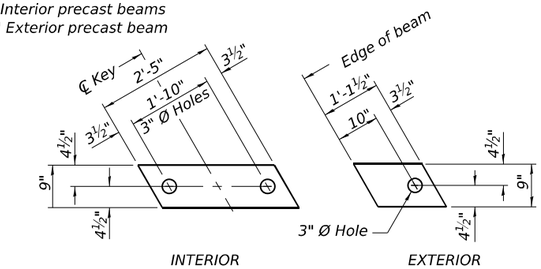

FABRIC BEARING PAD

Notes:

Bearing pads at fixed end shall be ½" thick and bearing pads at expansion end shall be ¾" thick.

Omit holes for fabric bearing pads at approach slab footing end of beams.

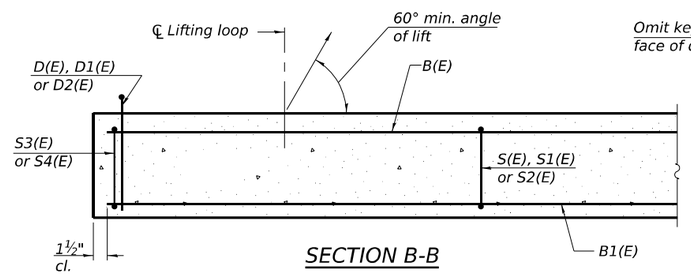

SECTION B-B

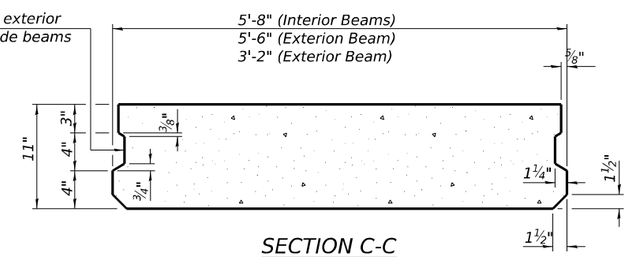

SECTION C-C

(Showing dimensions)

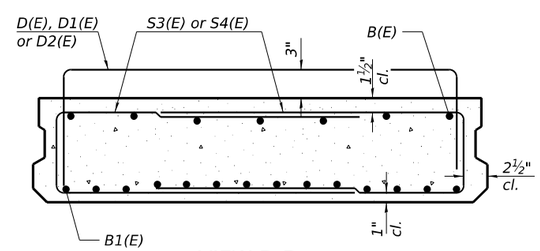

VIEW D-D

(Showing reinforcement)

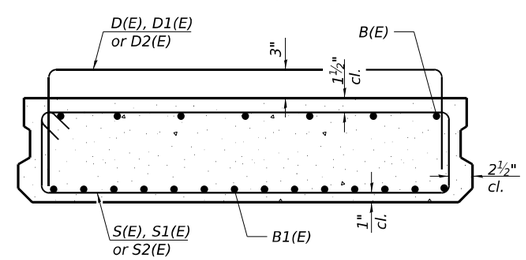

SECTION C-C

(Showing reinforcement)

MODEL: SHEET
FILE NAME: C:\TRANSYSTEMS\PW_LOCAL\TRANSYSTEMS-PW-01\DMS20864\0990902_0903-62F94-054-APPRDET3.DGN

10-27-2025, 16:48:53

exp.	USER NAME =	DESIGNED - BAR	REVISED -
		CHECKED - KK	REVISED -
	PLOT SCALE =	DRAWN - HBJ	REVISED -
	PLOT DATE =	CHECKED - BAR	REVISED -

STATE OF ILLINOIS
DEPARTMENT OF TRANSPORTATION

PRECAST BRIDGE APPROACH SLAB DETAILS 3
STRUCTURE NOS. 099-0902 (EB) & 099-0903 (WB)

SHEET SA-54 OF SA-112 SHEETS

F.A.I. RTE.	SECTION	COUNTY	TOTAL SHEETS	SHEET NO.
80	2017-057F	WILL	1342	718
		CONTRACT NO. 62F94		
		ILLINOIS	FED. AID PROJECT	

BAR LIST
EACH 3'-2" EXTERIOR BEAM
(For information only)

Bar	No.	Size	Length	Shape
B(E)	4	#5	29'-8"	—
B1(E)	7	#9	29'-8"	—
D2(E)	32	#4	4'-9"	⊓
S2(E)	58	#5	7'-10"	▭
S4(E)	10	#5	5'-3"	⊏

BAR LIST
EACH 5'-8" INTERIOR BEAM
(For information only)

Bar	No.	Size	Length	Shape
B(E)	7	#5	29'-8"	—
B1(E)	14	#9	29'-8"	—
D(E)	22	#4	7'-4"	⊓
S(E)	58	#5	13'-0"	▭
S3(E)	10	#5	7'-9"	⊏

BAR LIST
EACH 5'-6" EXTERIOR BEAM
(For information only)

Bar	No.	Size	Length	Shape
B(E)	6	#5	29'-8"	—
B1(E)	13	#9	29'-8"	—
D1(E)	32	#4	7'-2"	⊓
S1(E)	58	#5	12'-8"	▭
S3(E)	10	#5	7'-9"	⊏

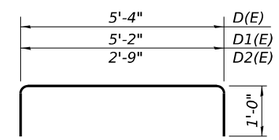

BARS D(E), D1(E) & D2(E)

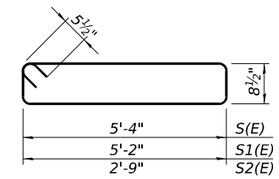

BARS S(E), S1(E) & S2(E)

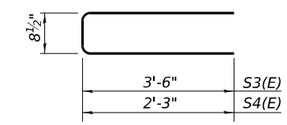

BARS S3(E) & S4(E)

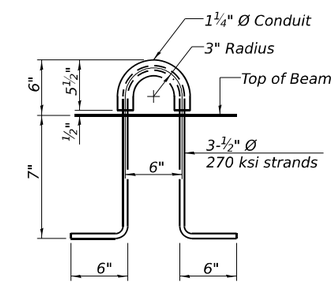

LIFTING LOOP DETAIL
(An alternate lifting loop with a proof load of 25,000 lbs. and utilized according to the manufacturer's recommendations may be used)

MODEL: SHEET
FILE NAME: C:\TRANSYSTEMS\PW_LOCAL\TRANSYSTEMS-PW-01\DMS20864\0990902_0903-62F94-055-APPRDET4.DGN

10-27-2025, 16:48:56

exp.

USER NAME =	DESIGNED - BAR	REVISED -	
	CHECKED - KK	REVISED -	
PLOT SCALE =	DRAWN - HBJ	REVISED -	
PLOT DATE =	CHECKED - BAR	REVISED -	

STATE OF ILLINOIS
DEPARTMENT OF TRANSPORTATION

PRECAST BRIDGE APPROACH SLAB DETAILS 4
STRUCTURE NOS. 099-0902 (EB) & 099-0903 (WB)

SHEET SA-55 OF SA-112 SHEETS

F.A.I. RTE.	SECTION	COUNTY	TOTAL SHEETS	SHEET NO.
80	2017-057F	WILL	1342	719
		CONTRACT NO. 62F94		
		ILLINOIS	FED. AID PROJECT	

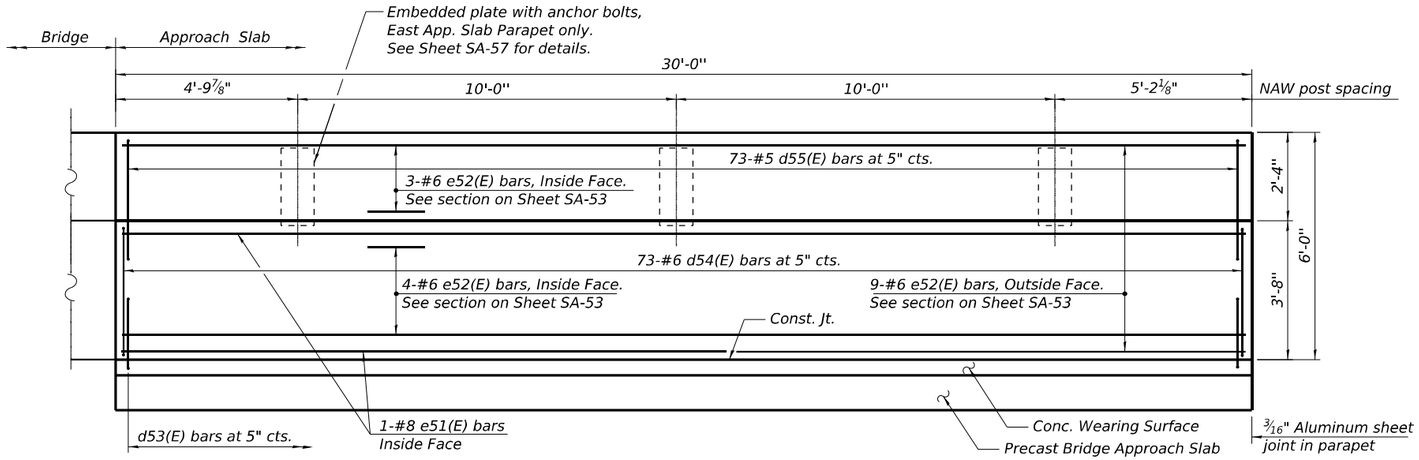

INSIDE ELEVATION OF NORTH PARAPET, EAST APPR. SLAB - WB

(Looking North)
North Parapet, West Appr. Slab - WB similar

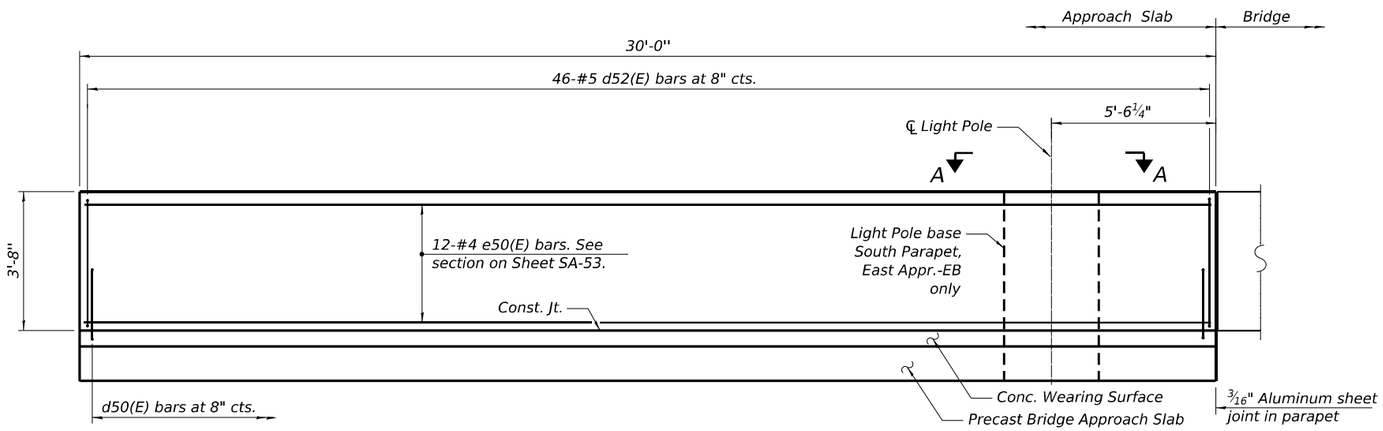

INSIDE ELEVATION OF SOUTH PARAPET, EAST APPR. SLAB - EB

(Looking South)
South Parapet, West Appr. Slab - EB similar, except as noted

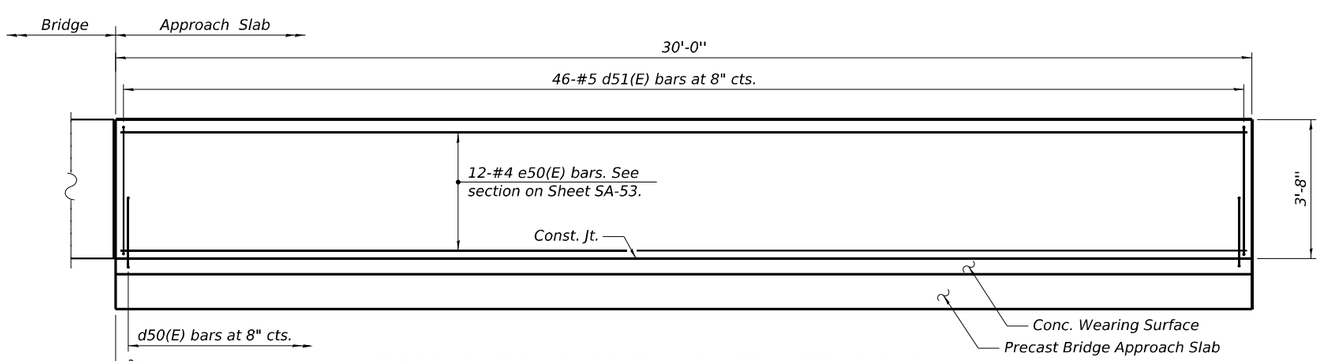

INSIDE ELEVATION OF SOUTH PARAPET, WEST APPR. SLAB - WB

(Looking South)
South Parapet, East Appr. Slab - WB similar
North Parapet, East & West Appr. Slabs - EB similar

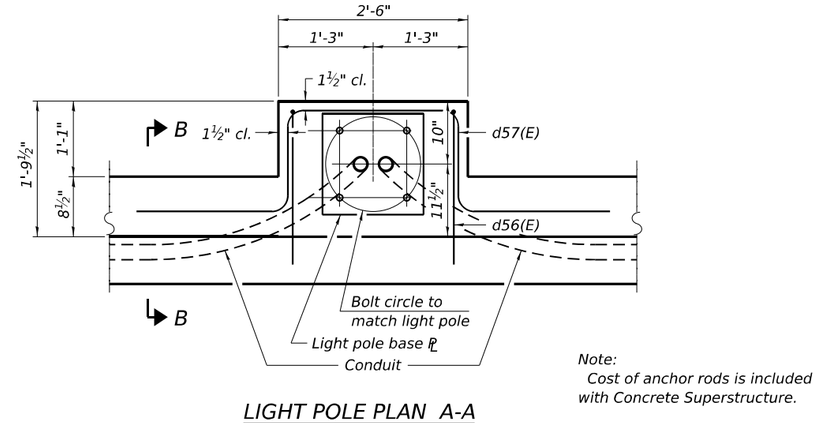

LIGHT POLE PLAN A-A

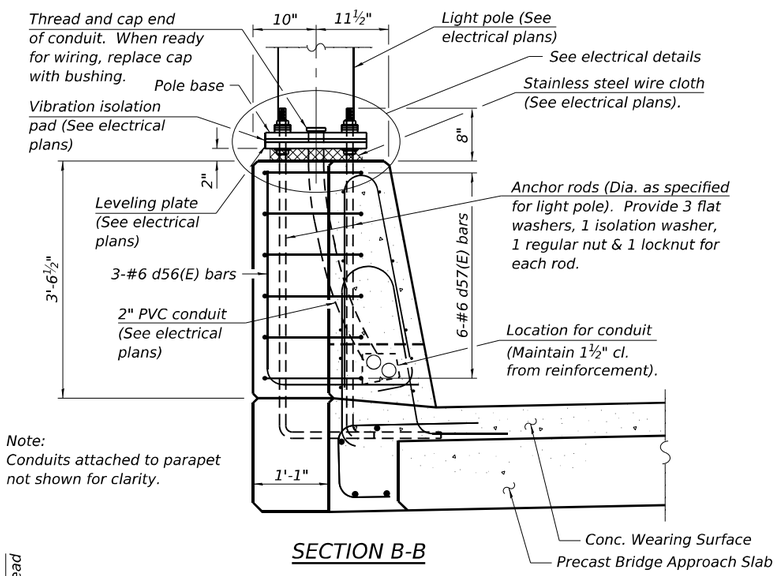

SECTION B-B

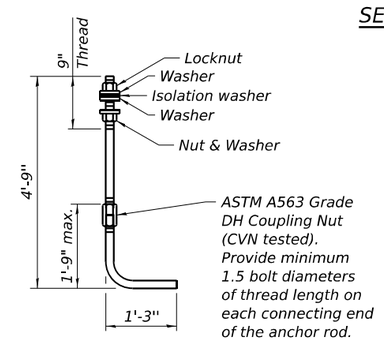

ALTERNATE ANCHOR ROD

Diameter as specified for light poles.
(ASTM F 1554 Grade 105) Full length
hot dipped galvanized.

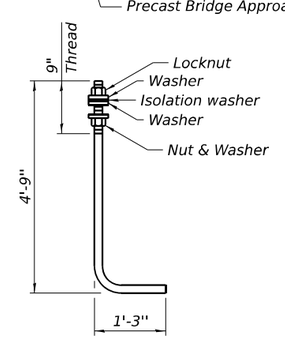

ANCHOR ROD

Diameter as specified for light poles.
(ASTM F 1554 Grade 105) Full length
hot dipped galvanized.

MODEL: SHEET
FILE NAME: C:\TRANSYSTEMS\PW_LOCAL\TRANSYSTEMS-PW-01\DMS20864\0990902_0903-62F94-056-APPRDET5.DGN

10-27-2025, 16:48:58

exp.

USER NAME =	DESIGNED - BAR	REVISED -	
	CHECKED - KK	REVISED -	
PLOT SCALE =	DRAWN - HBJ	REVISED -	
PLOT DATE =	CHECKED - BAR	REVISED -	

STATE OF ILLINOIS
DEPARTMENT OF TRANSPORTATION

PRECAST BRIDGE APPROACH SLAB DETAILS 5
STRUCTURE NOS. 099-0902 (EB) & 099-0903 (WB)

SHEET SA-56 OF SA-112 SHEETS

F.A.I. RTE.	SECTION	COUNTY	TOTAL SHEETS	SHEET NO.
80	2017-057F	WILL	1342	720
		CONTRACT NO. 62F94		
	ILLINOIS	FED. AID PROJECT		

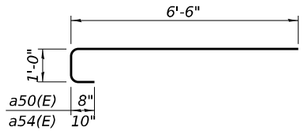

BARS a50(E) & a54(E)

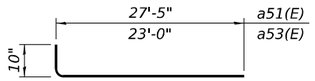

BARS a51(E) & a53(E)

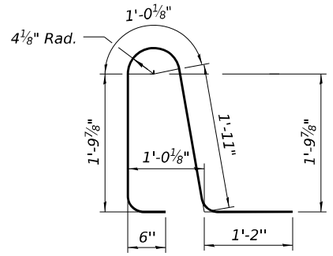

BAR d50(E)

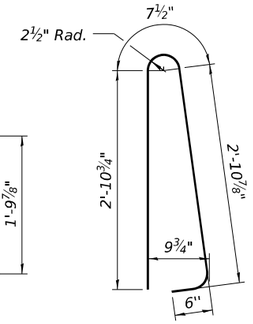

BAR d51(E)

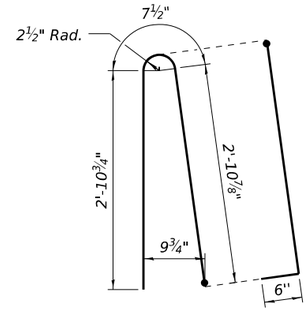

BAR d52(E)

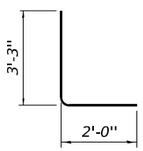

BAR d56(E)

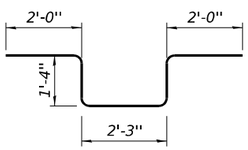

BAR d57(E)

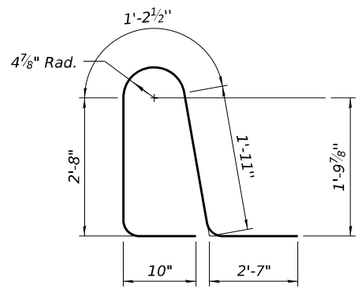

BAR d53(E)

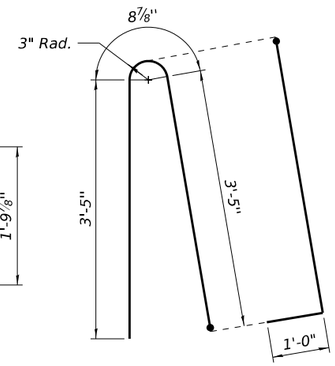

BAR d54(E)

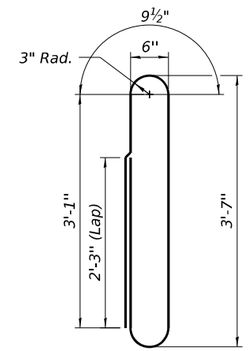

BAR d55(E)

TWO APPROACHES - WB
BILL OF MATERIAL

Bar	No.	Size	Length	Shape
a50(E)	62	#5	8'-2"	
a51(E)	62	#5	28'-3"	
a52(E)	62	#5	28'-0"	
a53(E)	62	#5	23'-10"	
a54(E)	62	#6	8'-4"	
b50(E)	148	#4	29'-8"	
b51(E)	16	#5	29'-8"	
d50(E)	92	#5	6'-5"	
d51(E)	92	#5	6'-11"	
d53(E)	146	#6	7'-1"	
d54(E)	146	#6	8'-7"	
d55(E)	146	#5	10'-0"	
e50(E)	24	#4	29'-8"	
e51(E)	4	#8	29'-8"	
e52(E)	32	#6	29'-8"	
t50(E)	228	#4	9'-10"	
t51(E)	76	#4	4'-10"	
t52(E)	76	#4	7'-0"	
w50(E)	85	#5	27'-6"	
w51(E)	170	#5	25'-6"	
Item			Unit	Quantity
Concrete Superstructure			Cu Yd	22.7
Concrete Structures			Cu Yd	53.6
Reinforcement Bars, Epoxy Coated			Pound	27,430
Preformed Joint Seal, 3 1/2"			Foot	60
Precast Bridge Approach Slab			Sq. Ft.	4,260
Concrete Wearing Surface, 5"			Sq. Yd.	500
Noise Abatement Wall Anchor Rod Assembly			Each	3

TWO APPROACHES - EB
BILL OF MATERIAL

Bar	No.	Size	Length	Shape
a50(E)	124	#5	8'-2"	
a51(E)	62	#5	28'-3"	
a52(E)	62	#5	28'-0"	
a53(E)	62	#5	23'-10"	
b50(E)	148	#4	29'-8"	
b51(E)	16	#5	29'-8"	
d50(E)	184	#5	6'-5"	
d51(E)	92	#5	6'-11"	
d52(E)	92	#5	6'-11"	
d56(E)	3	#6	5'-3"	
d57(E)	6	#6	8'-11"	
e50(E)	48	#4	29'-8"	
t50(E)	304	#4	9'-10"	
w50(E)	80	#5	27'-6"	
w51(E)	260	#5	25'-6"	
Item			Unit	Quantity
Concrete Superstructure			Cu Yd	16.9
Concrete Structures			Cu Yd	46.2
Reinforcement Bars, Epoxy Coated			Pound	24,490
Precast Bridge Approach Slab			Sq. Ft.	4,260
Concrete Wearing Surface, 5"			Sq. Yd.	499

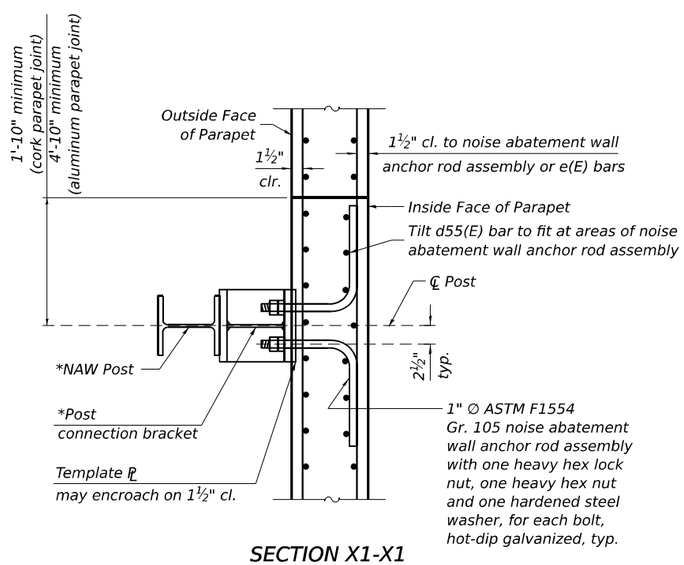

SECTION X1-X1

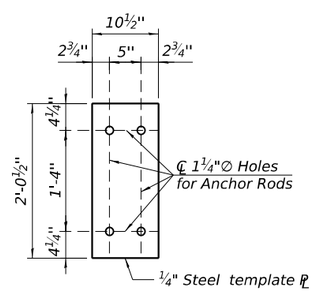

TEMPLATE PLATE FOR
NOISE ABATEMENT WALL
ANCHOR ROD ASSEMBLY

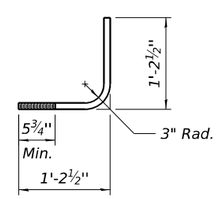

NOISE ABATEMENT WALL
ANCHOR ROD ASSEMBLY

Notes:

The joint opening shall be adjusted for temperature per Article 520.04 of the Standard Specifications. However, since this detail is for jointless structures, the length of bridge used to calculate the adjustment shall be equal to half the total bridge length plus the length of the bridge approach slab.

After precast bridge approach slabs have been erected, holes shall be drilled into abutment and anchor dowels placed. Dowel holes shall be filled with non-shrink grout to top of precast slab and cured according to Article 1020.13(a)(3) or 1020.13(a)(5) of the Standard Specifications for a minimum of 24 hours before casting the shear keys and wearing surface.

Any concrete poured monolithically with the wearing surface, such as curbs, shall not be paid for separately, but will be included in the cost of Concrete Wearing Surface, 5".

Parapet concrete shall be paid for as Concrete Superstructure.

Approach footing concrete shall be paid for as Concrete Structures.

The approach footing maximum applied service bearing pressure (Qmax) = 2.0 ksf.

Cost of excavation for approach footing included with Concrete Structures.

For Granular Backfill for Structures and drainage treatment details, see sheet SA-4.

Cost of cellular polystyrene is included with Concrete Superstructure.

* For Noise Abatement Wall 099-N1002 details, see SN sheets.

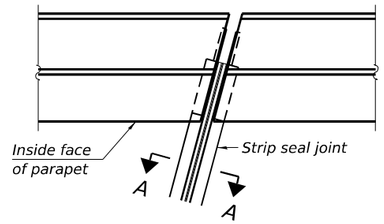

FOR SKEWS ≤ 30°

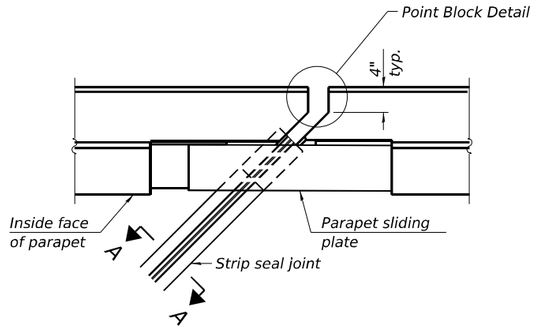

FOR SKEWS > 30°

PLAN AT PARAPET

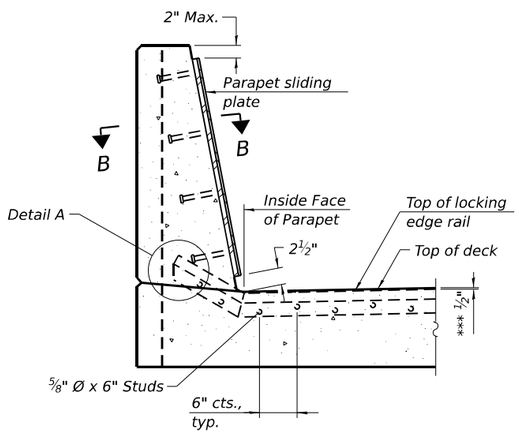

SECTION AT PARAPET

(Skews > 30° shown. Skews ≤ 30° similar except as shown in plan view.)

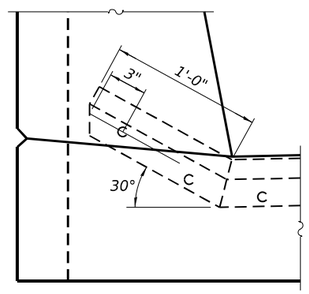

DETAIL A

*** Prior to grinding.

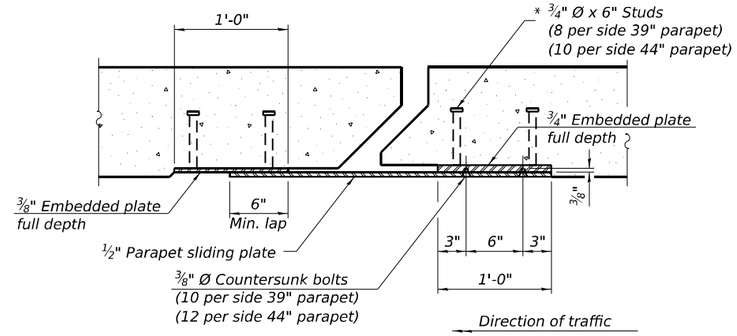

SECTION B-B

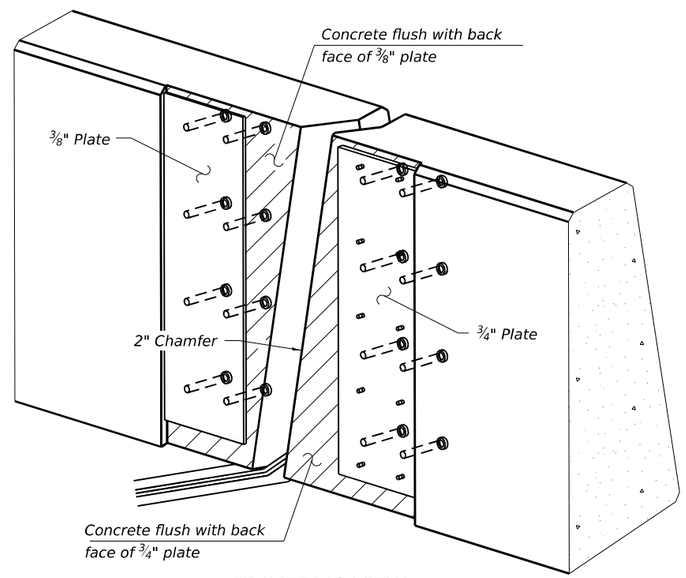

TRIMETRIC VIEW

(Showing embedded plates only)

Notes:

The strip seal shall be made continuous and shall have a minimum thickness of ¼". The configuration of the strip seal shall match the configuration of the locking edge rails. Open or "webbed" strip seal gland configurations are not permitted. The gland shall be sized for a maximum rated movement of 4 inches.

The locking edge rails depicted are configured for typical applications and are conceptual only. The actual configuration of the locking edge rails and matching strip seal may vary from manufacturer to manufacturer provided they fit the application and meet the minimum anchorage shown. Flanged edge rails, however, will not be allowed. Locking edge rails may exceed the 4½" maximum depth provided the anchorage system is revised according to the manufacturer's recommendation.

The manufacturer's recommended installation methods shall be followed.

All steel components shall be galvanized after fabrication according to Article 520.03 of the Standard Specifications.

The Maximum space between locking edge rail segments shall be c" and sealed with a suitable sealant; however, any rail joint within 10' measured perpendicular to the face of the curb or parapet shall be welded as shown in the locking edge rail splice detail.

Cost of parapet sliding plates, embedded plates, and anchorage studs included with Preformed Joint Strip Seal.

39" constant slope barrier shown, 44" constant slope barrier similar as noted.

The concrete opening below the strip seal will vary based on the locking edge rail chosen by the Contractor. Deck and parapet lengths shown elsewhere in the plans are dimensioned to the concrete opening, not the joint opening, and are based on the rolled locking edge rail. If the Contractor elects to use a different locking edge rail, dimensional adjustments may be required. One exception to this would be the strip seal joint at the end of the precast bridge approach slab. For these cases the pavement connector length shall be adjusted, not the length of the bridge approach slab.

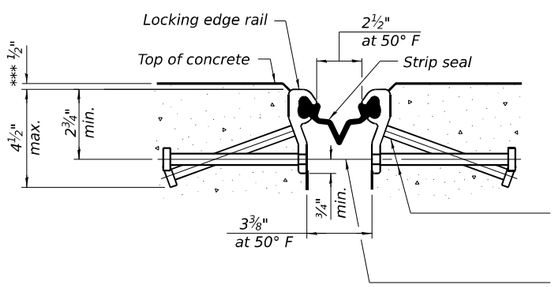

SHOWING ROLLED RAIL JOINT

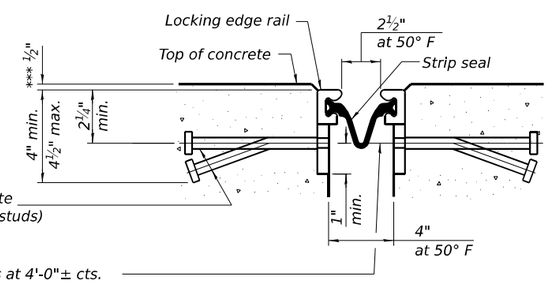

SHOWING WELDED RAIL JOINT

* ⅝" Ø x 6" studs @ 6" cts. (alternate angled/bent studs with horizontal studs)

⅜" Ø threaded rods in 7/16" Ø holes at 4'-0"± cts. for holding the proper joint opening based on the temperature during the deck pour. Place to miss studs. All rods shall be burned, or sawed off flush with the plates after concrete is set.

SECTION A-A

* Granular or solid flux filled headed studs conforming to Article 1006.32 of the Std. Specs., automatically end welded.

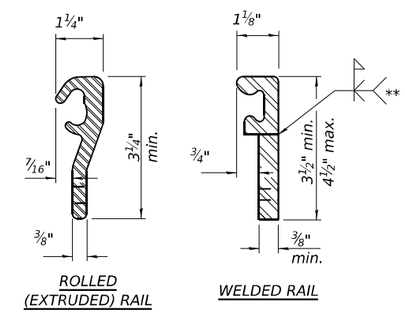

ROLLED (EXTRUDED) RAIL

WELDED RAIL

LOCKING EDGE RAILS

** Back gouge not required if complete joint penetration is verified by mock-up.

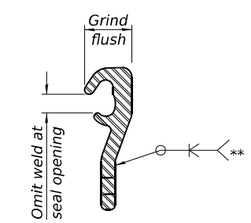

LOCKING EDGE RAIL SPLICE

The inside of the locking edge rail groove shall be free of weld residue. Rolled rail shown, welded rail similar.

BILL OF MATERIAL

Item	Unit	Total
Preformed Joint Strip Seal	Foot	302

USER NAME =	DESIGNED - BAR	REVISED -	
	CHECKED - KK	REVISED -	
PLOT SCALE =	DRAWN - MTR	REVISED -	
PLOT DATE =	CHECKED - BAR	REVISED -	

STATE OF ILLINOIS
DEPARTMENT OF TRANSPORTATION

MODIFIED PREFORMED JOINT STRIP SEAL
STRUCTURE NOS. 099-0902 (EB) & 099-0903 (WB)

SHEET SA-58 OF SA-112 SHEETS

F.A.I. RTE.	SECTION	COUNTY	TOTAL SHEETS	SHEET NO.
80	2017-057F	WILL	1342	722
		CONTRACT NO. 62F94		
		ILLINOIS	FED. AID PROJECT	

MODEL: SHEET
FILE NAME: C:\TRANSYSTEMS\PW_LOCAL\TRANSYSTEMS-PW-01\D\M520864\0900902_0903-62F94-058-PIS.DGN

10-27-2025, 16:49:04

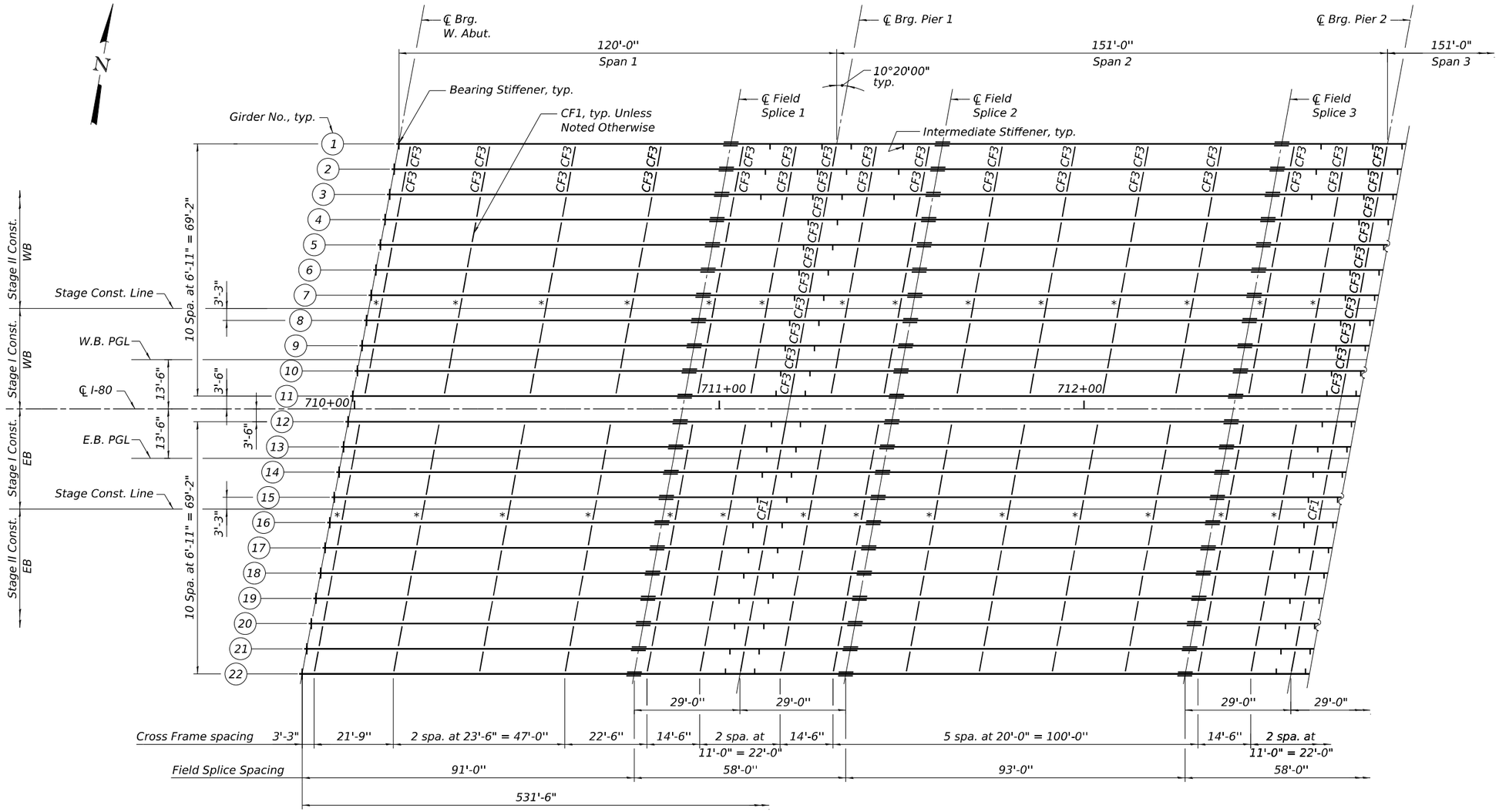

PARTIAL FRAMING PLAN (1 OF 2)

* CF1 permanent. Temporary CF2 for stage construction.
See Cross Frame Stage Construction Sequence on Sheet SA-64.

Notes:

1. All structural steel shall be AASHTO M270 Grade 50 except angle members and gusset plates of CF1 and CF2 cross frames which may be Grade 36.
2. All cross-frames between beams or girders shall be installed with erection pins and bolts in accordance with the erection plan approved by the Engineer. Individual cross-frames at supports may be temporarily disconnected to install bearing anchor bolts.
3. Cross frame spacing shown is measured to centerline of cross frame connection plates.
4. For cross frame details, see Sheet SA-64.

MODEL: SHEET
FILE NAME: C:\TRANSYSTEMS\PW_LOCAL\TRANSYSTEMS-PW-01\DMS20864\0990902_0903-62F94-059-FRAMING1.DGN

exp.

USER NAME =	DESIGNED - CCE	REVISED -	
	CHECKED - BAR	REVISED -	
PLOT SCALE =	DRAWN - HBJ	REVISED -	
PLOT DATE =	CHECKED - BAR	REVISED -	

STATE OF ILLINOIS
DEPARTMENT OF TRANSPORTATION

FRAMING PLAN 1
STRUCTURE NOS. 099-0902 (EB) & 099-0903 (WB)

SHEET SA-59 OF SA-112 SHEETS

F.A.I. RTE.	SECTION	COUNTY	TOTAL SHEETS	SHEET NO.
80	2017-057F	WILL	1342	723
		CONTRACT NO. 62F94		
	ILLINOIS	FED. AID PROJECT		

10-27-2025, 16:49:07

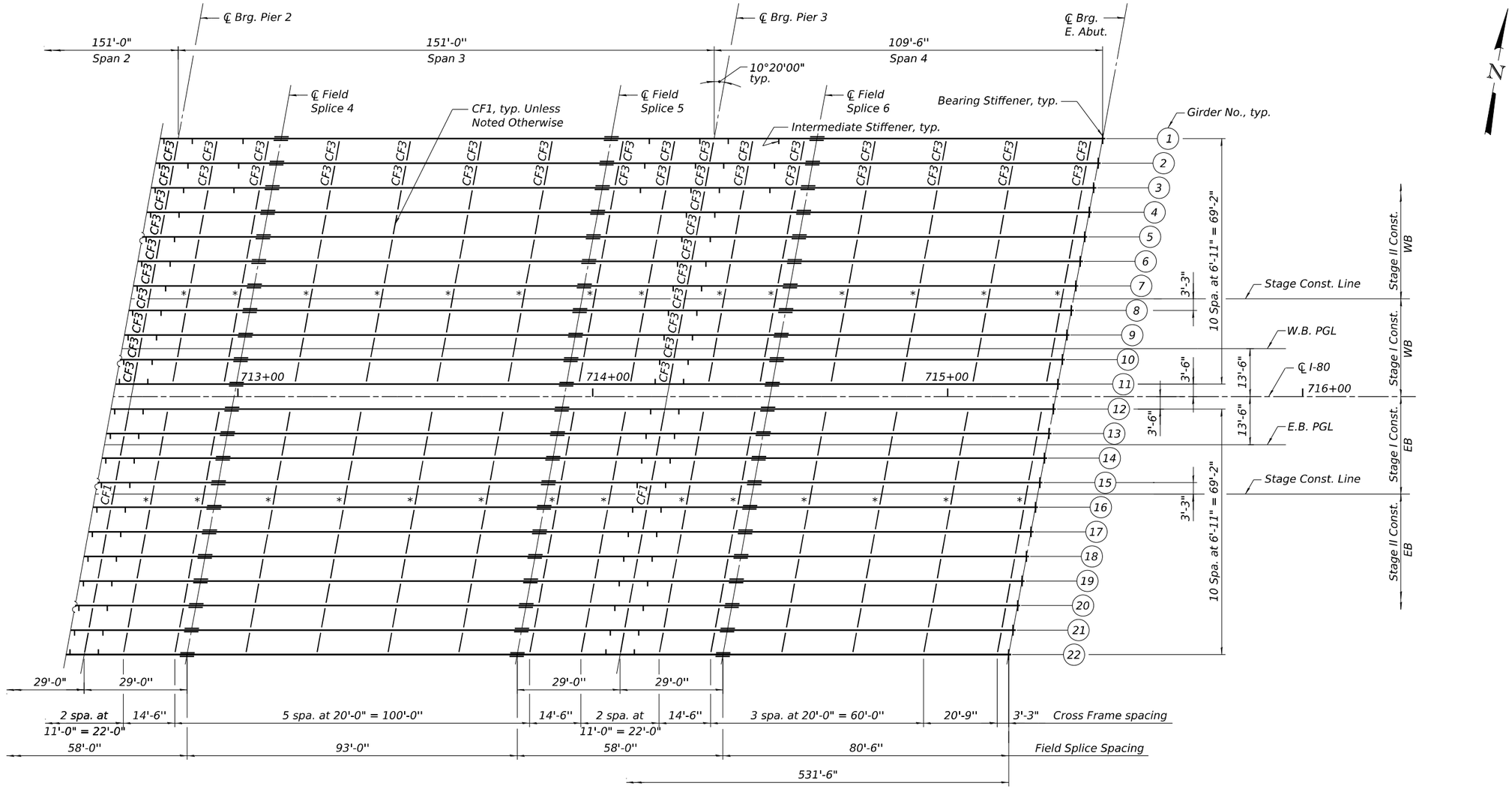

PARTIAL FRAMING PLAN (2 OF 2)

* CF1 permanent. Temporary CF2 for stage construction.
See Cross Frame Stage Construction Sequence on Sheet SA-64.

Note:
For Notes, see Sht. SA-59.

MODEL: SHEET
FILE NAME: C:\TRANSYSTEMS\PW_LOCAL\TRANSYSTEMS-PW-01\DMS20864\09900902_0903-62F94-060-FRAMING2.DGN

exp.	USER NAME =	DESIGNED - CCE	REVISED -	STATE OF ILLINOIS DEPARTMENT OF TRANSPORTATION	FRAMING PLAN 2 STRUCTURE NOS. 099-0902 (EB) & 099-0903 (WB)
		CHECKED - BAR	REVISED -		
	PLOT SCALE =	DRAWN - HBJ	REVISED -		
	PLOT DATE =	CHECKED - BAR	REVISED -		SHEET SA-60 OF SA-112 SHEETS

F.A.I. RTE.	SECTION	COUNTY	TOTAL SHEETS	SHEET NO.
80	2017-057F	WILL	1342	724
		CONTRACT NO. 62F94		
	ILLINOIS	FED. AID PROJECT		

10-27-2025, 16:49:10

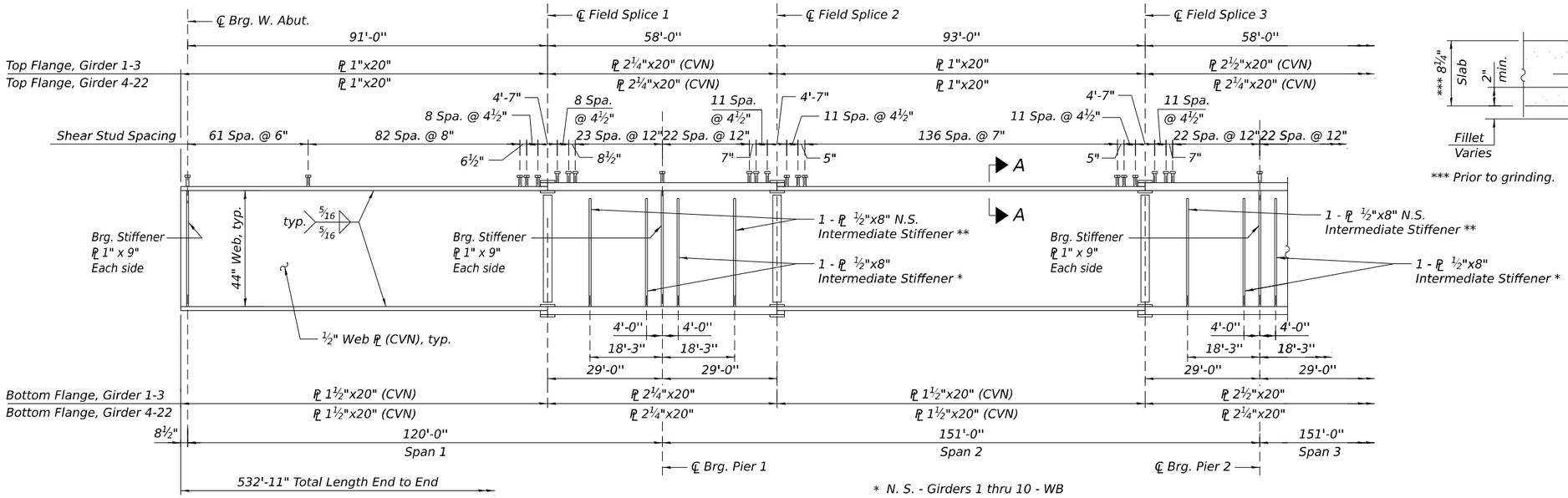

* N. S. - Girders 1 thru 10 - WB
Girders 12 thru 21 - EB
F. S. - Girder 11 - WB
Girder 22 - EB

** Girders 1 thru 3 only

PARTIAL GIRDER ELEVATION (1 OF 2)

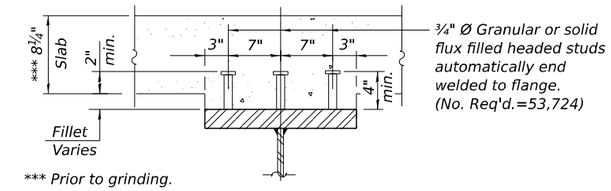

SECTION A-A

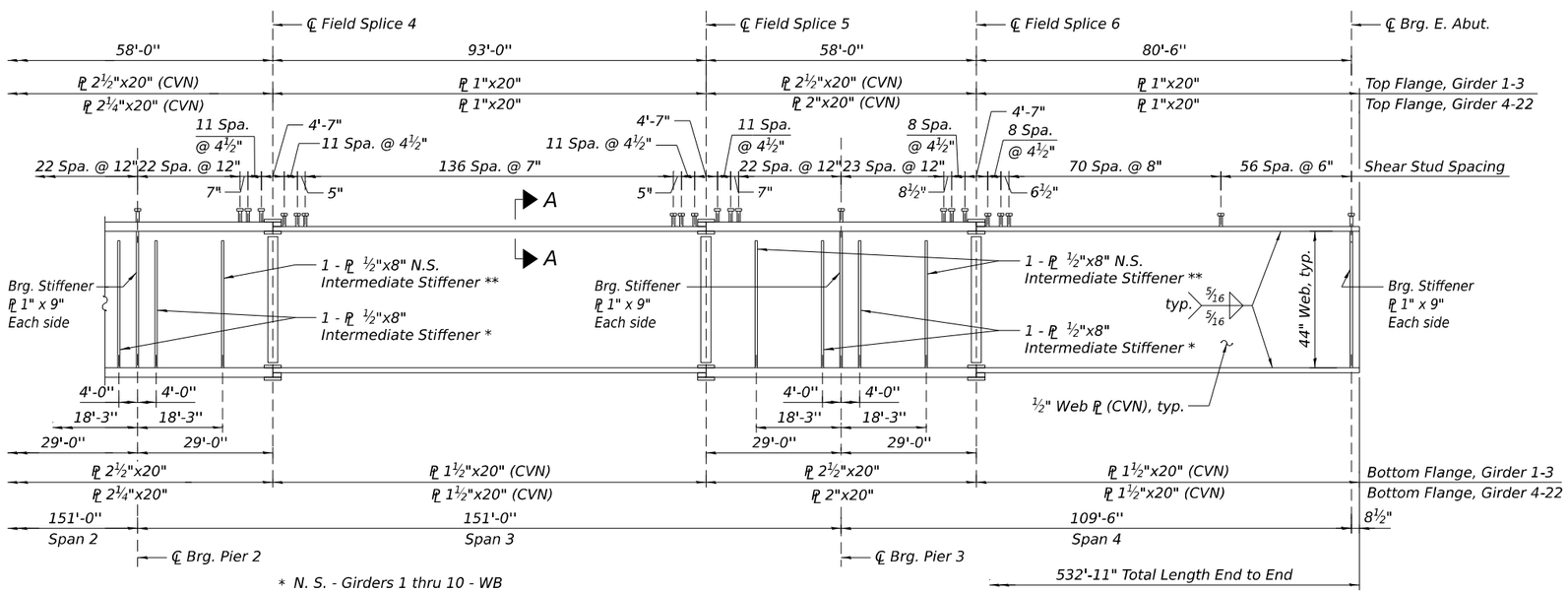

* N. S. - Girders 1 thru 10 - WB
Girders 12 thru 21 - EB
F. S. - Girder 11 - WB
Girder 22 - EB

** Girders 1 thru 3 only

PARTIAL GIRDER ELEVATION (2 OF 2)

Notes:

1. All structural steel shall be AASHTO M270 Grade 50.
2. Load carrying components designated "CVN" shall conform to the Charpy-V-Notch Impact Energy Requirement, Zone 2.
3. Do not place shear studs on splice plates. Maintain a minimum distance of 2½" from end of splice plate to centerline of nearest stud.
4. Cross frame connection plates not shown on girder elevation. For locations see Framing Plan. For details see Sheet SA-64.
5. For field splice details, see Sheet SA-64.
6. For bearing stiffener details, see Sheet SA-64.
7. For intermediate stiffener details, see Sheet SA-64.
8. N.S. denotes Near Side.
9. F.S. denotes Far Side.

MODEL: SHEET
FILE NAME: C:\TRANSYSTEMS\PW_LOCAL\TRANSYSTEMS-PW-01\DMS20864\0990902_0903-62F94-061-GIRDERELEV.DGN

exp.

USER NAME =	DESIGNED - CCE	REVISED -	
	CHECKED - BAR	REVISED -	
PLOT SCALE =	DRAWN - HBJ	REVISED -	
PLOT DATE =	CHECKED - BAR	REVISED -	

STATE OF ILLINOIS
DEPARTMENT OF TRANSPORTATION

GIRDER ELEVATION
STRUCTURE NOS. 099-0902 (EB) & 099-0903 (WB)

SHEET SA-61 OF SA-112 SHEETS

F.A.I. RTE.	SECTION	COUNTY	TOTAL SHEETS	SHEET NO.
80	2017-057F	WILL	1342	725
		CONTRACT NO. 62F94		
	ILLINOIS	FED. AID PROJECT		

10-27-2025, 16:49:14

EXTERIOR GIRDER MOMENT TABLE - GIRDER 1								
		0.4 Span 1	Pier 1	0.5 Span 2	Pier 2	0.5 Span 3	Pier 3	0.6 Span 4
I_s	(in^4)	28458	51716	28458	57658	28458	57658	28458
I_c (n)	(in^4)	62562	-	62562	-	62562	-	62562
I_c (3n)	(in^4)	45380	-	45380	-	45380	-	45380
I_c (cr)	(in^4)	-	56310	-	62349	-	62349	-
S_s	(in^3)	1404	2133	1404	2353	1404	2353	1404
S_c (n)	(in^3)	1762	-	1762	-	1762	-	1762
S_c (3n)	(in^3)	1629	-	1629	-	1629	-	1629
S_c (cr)	(in^3)	-	2195	-	2417	-	2417	-
S_x	(in^3)	1664	2174	1685	2397	1669	2398	1688
DC1	(k/')	1.128	1.264	1.128	1.298	1.128	1.298	1.128
M_{DC1}	('k)	1025	2373	835	2470	890	2271	741
DC2	(k/')	0.406	0.406	0.406	0.705	0.705	0.705	0.705
M_{DC2}	('k)	418	708	220	1178	702	1437	440
DW	(k/')	0.327	0.327	0.327	0.327	0.327	0.327	0.327
M_{DW}	('k)	302	658	257	693	273	625	221
LLDF		0.475	0.465	0.457	0.457	0.457	0.468	0.483
M_{LL+IM}	('k)	1416	1683	1365	1773	1346	1662	1282
f_ℓ (Strength I)	(ksi)	0.00	0.00	0.00	0.00	0.00	0.00	0.00
$M_u + \frac{1}{3} f_\ell S_x$	('k)	4735	7784	4093	8702	4755	8481	4051
$\Phi_f M_n$	('k)	8112	9931	8112	10932	8112	10936	8112
f_s DC1	(ksi)	8.76	13.35	7.14	12.59	7.61	11.58	6.33
f_s DC2	(ksi)	3.08	3.87	1.62	5.85	5.17	7.14	3.24
f_s DW	(ksi)	2.22	3.60	1.89	3.44	2.01	3.10	1.63
f_s (LL+IM)	(ksi)	9.64	9.20	9.30	8.80	9.17	8.25	8.73
f_ℓ (Service II)	(ksi)	0.00	0.00	0.00	0.00	0.00	0.00	0.00
$f_s + f_\ell/2$ (Service II)	(ksi)	26.60	32.78	22.74	33.33	26.71	32.55	22.55
Service II Resistance	(ksi)	47.50	47.50	47.50	47.50	47.50	47.50	47.50
$f_s + f_\ell/3$ (Strength I)	(ksi)	35.02	43.02	30.06	43.62	35.03	42.49	29.69
$\Phi_f F_n$	(ksi)	-	-	-	-	-	-	-
V_f	(k)	57.8	56.0	44.8	59.9	44.9	61.6	56.0

INTERIOR GIRDER MOMENT TABLE - GIRDERS 2 AND 3								
		0.4 Span 1	Pier 1	0.5 Span 2	Pier 2	0.5 Span 3	Pier 3	0.6 Span 4
I_s	(in^4)	28458	51716	28458	57658	28458	57658	28458
I_c (n)	(in^4)	65398	-	65398	-	65398	-	65398
I_c (3n)	(in^4)	47551	-	47551	-	47551	-	47551
I_c (cr)	(in^4)	-	57079	-	63138	-	63138	-
S_s	(in^3)	1404	2133	1404	2353	1404	2353	1404
S_c (n)	(in^3)	1779	-	1779	-	1779	-	1779
S_c (3n)	(in^3)	1649	-	1649	-	1649	-	1649
S_c (cr)	(in^3)	-	2205	-	2427	-	2427	-
S_x	(in^3)	1687	2182	1705	2405	1692	2407	1710
DC1	(k/')	1.044	1.181	1.044	1.215	1.044	1.215	1.044
M_{DC1}	('k)	950	2200	773	2289	824	2106	686
DC2	(k/')	0.308	0.308	0.308	0.532	0.532	0.532	0.532
M_{DC2}	('k)	317	537	169	889	532	1081	333
DW	(k/')	0.327	0.327	0.327	0.327	0.327	0.327	0.327
M_{DW}	('k)	303	656	259	692	275	623	221
LLDF		0.551	0.540	0.530	0.530	0.530	0.544	0.560
M_{LL+IM}	('k)	1642	1953	1583	2054	1562	1931	1487
f_ℓ (Strength I)	(ksi)	0.00	0.00	0.00	0.00	0.00	0.00	0.00
$M_u + \frac{1}{3} f_\ell S_x$	('k)	4912	7823	4336	8605	4841	8298	4208
$\Phi_f M_n$	('k)	8272	9954	8272	10953	8272	10958	8272
f_s DC1	(ksi)	8.12	12.38	6.61	11.67	7.04	10.74	5.86
f_s DC2	(ksi)	2.31	2.92	1.23	4.40	3.87	5.35	2.42
f_s DW	(ksi)	2.20	3.57	1.88	3.42	2.00	3.08	1.61
f_s (LL+IM)	(ksi)	11.08	10.63	10.68	10.16	10.54	9.55	10.03
f_ℓ (Service II)	(ksi)	0.00	0.00	0.00	0.00	0.00	0.00	0.00
$f_s + f_\ell/2$ (Service II)	(ksi)	27.03	32.69	23.61	32.70	26.61	31.58	22.94
Service II Resistance	(ksi)	47.50	47.50	47.50	47.50	47.50	47.50	47.50
$f_s + f_\ell/3$ (Strength I)	(ksi)	35.73	43.09	31.31	42.99	35.09	41.44	30.33
$\Phi_f F_n$	(ksi)	-	-	-	-	-	-	-
V_f	(k)	73.8	71.5	57.2	76.4	57.4	78.7	71.5

EXTERIOR GIRDER MOMENT TABLE - GIRDERS 11 AND 12								
		0.4 Span 1	Pier 1	0.5 Span 2	Pier 2	0.5 Span 3	Pier 3	0.6 Span 4
I_s	(in^4)	28458	51716	28458	51716	28458	45896	28458
I_c (n)	(in^4)	65294	-	65294	-	65294	-	65294
I_c (3n)	(in^4)	47468	-	47468	-	47468	-	47468
I_c (cr)	(in^4)	-	57049	-	57049	-	51109	-
S_s	(in^3)	1404	2133	1404	2133	1404	1912	1404
S_c (n)	(in^3)	1778	-	1778	-	1778	-	1778
S_c (3n)	(in^3)	1648	-	1648	-	1648	-	1648
S_c (cr)	(in^3)	-	2204	-	2204	-	1984	-
S_x	(in^3)	1684	2181	1700	2180	1690	1960	1706
DC1	(k/')	1.108	1.244	1.108	1.244	1.108	1.210	1.108
M_{DC1}	('k)	1006	2335	830	2395	938	2109	766
DC2	(k/')	0.231	0.231	0.231	0.231	0.231	0.231	0.231
M_{DC2}	('k)	214	463	185	484	206	421	164
DW	(k/')	0.327	0.327	0.327	0.327	0.327	0.327	0.327
M_{DW}	('k)	303	656	262	686	291	597	232
LLDF		0.551	0.540	0.530	0.530	0.530	0.544	0.560
M_{LL+IM}	('k)	1688	2051	1702	2152	1707	1911	1512
f_ℓ (Strength I)	(ksi)	0.00	0.00	0.00	0.00	0.00	0.00	0.00
$M_u + \frac{1}{3} f_\ell S_x$	('k)	4934	8071	4640	8394	4854	7402	4157
$\Phi_f M_n$	('k)	8266	9950	8266	9948	8266	8958	8266
f_s DC1	(ksi)	8.60	13.14	7.09	13.48	8.02	13.23	6.55
f_s DC2	(ksi)	1.56	2.52	1.35	2.63	1.50	2.55	1.19
f_s DW	(ksi)	2.21	3.57	1.91	3.73	2.12	3.61	1.69
f_s (LL+IM)	(ksi)	11.39	11.17	11.49	11.71	11.52	11.56	10.20
f_ℓ (Service II)	(ksi)	0.00	0.00	0.00	0.00	0.00	0.00	0.00
$f_s + f_\ell/2$ (Service II)	(ksi)	27.17	33.74	25.28	35.07	26.61	34.42	22.70
Service II Resistance	(ksi)	47.50	47.50	47.50	47.50	47.50	47.50	47.50
$f_s + f_\ell/3$ (Strength I)	(ksi)	35.94	44.47	33.51	46.24	35.23	45.37	30.07
$\Phi_f F_n$	(ksi)	-	-	-	-	-	-	-
V_f	(k)	78.7	76.2	61.1	81.3	61.0	83.2	75.8

INTERIOR GIRDER MOMENT TABLE - GIRDERS 20 AND 21								
		0.4 Span 1	Pier 1	0.5 Span 2	Pier 2	0.5 Span 3	Pier 3	0.6 Span 4
I_s	(in^4)	28458	51716	28458	51716	28458	45896	28458
I_c (n)	(in^4)	65398	-	65398	-	65398	-	65398
I_c (3n)	(in^4)	47551	-	47551	-	47551	-	47551
I_c (cr)	(in^4)	-	57079	-	57079	-	51139	-
S_s	(in^3)	1404	2133	1404	2133	1404	1912	1404
S_c (n)	(in^3)	1779	-	1779	-	1779	-	1779
S_c (3n)	(in^3)	1649	-	1649	-	1649	-	1649
S_c (cr)	(in^3)	-	2205	-	2205	-	1984	-
S_x	(in^3)	1690	2182	1705	2182	1696	1962	1711
DC1	(k/')	1.043	1.179	1.043	1.179	1.043	1.145	1.043
M_{DC1}	('k)	947	2199	781	2255	883	1986	721
DC2	(k/')	0.185	0.185	0.185	0.185	0.185	0.185	0.185
M_{DC2}	('k)	171	371	148	388	165	338	131
DW	(k/')	0.327	0.327	0.327	0.327	0.327	0.327	0.327
M_{DW}	('k)	303	656	262	686	291	597	232
LLDF		0.551	0.540	0.530	0.530	0.530	0.544	0.560
M_{LL+IM}	('k)	1643	1957	1594	2016	1599	1836	1496
f_ℓ (Strength I)	(ksi)	0.00	0.00	0.00	0.00	0.00	0.00	0.00
$M_u + \frac{1}{3} f_\ell S_x$	('k)	4727	7621	4344	7861	4545	7014	4031
$\Phi_f M_n$	('k)	8272	9954	8272	9952	8272	8962	8272
f_s DC1	(ksi)	8.09	12.37	6.68	12.69	7.55	12.46	6.16
f_s DC2	(ksi)	1.24	2.02	1.08	2.11	1.20	2.04	0.95
f_s DW	(ksi)	2.20	3.57	1.91	3.73	2.12	3.61	1.69
f_s (LL+IM)	(ksi)	11.09	10.65	10.75	10.97	10.79	11.10	10.09
f_ℓ (Service II)	(ksi)	0.00	0.00	0.00	0.00	0.00	0.00	0.00
$f_s + f_\ell/2$ (Service II)	(ksi)	25.95	31.81	23.64	32.80	24.89	32.55	21.93
Service II Resistance	(ksi)	47.50	47.50	47.50	47.50	47.50	47.50	47.50
$f_s + f_\ell/3$ (Strength I)	(ksi)	34.38	41.99	31.37	43.30	32.99	42.98	29.09
$\Phi_f F_n$	(ksi)	-	-	-	-	-	-	-
V_f	(k)	73.9	71.5	57.3	76.2	57.2	78.1	71.1

I_s , S_s : Non-composite moment of inertia and section modulus of the steel section used for computing f_s (Total-Strength I, and Service II) due to non-composite dead loads ($in.^4$ and $in.^3$).

I_c (n), S_c (n): Composite moment of inertia and section modulus of the steel and deck based upon the modular ratio, "n", used for computing f_s (Total-Strength I, and Service II) in uncracked sections due to short-term composite live loads ($in.^4$ and $in.^3$).

I_c (3n), S_c (3n): Composite moment of inertia and section modulus of the steel and deck based upon 3 times the modular ratio, "3n", used for computing f_s (Total-Strength I, and Service II) in uncracked sections, due to long-term composite (superimposed) dead loads ($in.^4$ and $in.^3$).

I_c (cr), S_c (cr): Composite moment of inertia and section modulus of the steel and longitudinal deck reinforcement, used for computing f_s (Total-Strength I and Service II) in cracked sections, due to both short-term composite live loads and long-term composite (superimposed) dead loads ($in.^4$ and $in.^3$).

S_x : Section modulus about the major axis of a section to the controlling flange, tension or compression, taken as yield moment with respect to the controlling flange over the yield strength of the controlling flange ($in.^3$).

DC1: Un-factored non-composite dead load (kips/ft.).

M_{DC1}: Un-factored moment due to non-composite dead load (kip-ft.).

DC2: Un-factored long-term composite (superimposed excluding future wearing surface) dead load (kips/ft.).

M_{DC2}: Un-factored moment due to long-term composite (superimposed excluding future wearing surface) dead load (kip-ft.).

DW: Un-factored long-term composite (superimposed future wearing surface only) dead load (kips/ft.).

M_{DW} : Un-factored moment due to long-term composite (superimposed future wearing surface only) dead load (kip-ft.).

LLDF: Live Load Distribution Factor for moment and shear computed according to Article 4.6.2.2 and further IDOT provisions.

M_{LL+IM}: Un-factored live load moment plus dynamic load allowance (impact) (kip-ft.).

M_u : Strength I load combination of factored design moments (kip-ft.). $1.25 (M_{DC1} + M_{DC2}) + 1.5 M_{DW} + 1.75 M_{LL+IM}$

f_ℓ : Factored calculated flange lateral bending stress as calculated using Article 6.10.1.6 and as further simplified by IDOT provisions (ksi).

$\Phi_f M_n$: Factored nominal flexural resistance of the section determined as specified in Article 6.10.7.1 or A6 as applicable (kip-ft.).

f_s DC1: Un-factored stress at edge of flange for controlling steel flange due to vertical non-composite dead loads as calculated below (ksi).
M_{DC1} / S_s

f_s DC2: Un-factored stress at edge of flange for controlling steel flange due to vertical composite dead loads as calculated below (ksi).
M_{DC2} / S_c (3n) or M_{DC2} / S_c (cr) as applicable.

f_s DW: Un-factored stress at edge of flange for controlling steel flange due to vertical composite future wearing surface loads as calculated below (ksi).
M_{DW} / S_c (3n) or M_{DW} / S_c (cr) as applicable.

f_s (LL+ IM): Un-factored stress at edge of flange for controlling steel flange due to vertical composite live load plus impact loads as calculated below (ksi).
M_{LL+IM} / S_c (n) or M_{LL+IM} / S_c (cr) as applicable.

$f_s + f_\ell / 2$ (Service II): Sum of stresses as computed below (ksi).
f_s DC1 + f_s DC2 + f_s DW + 1.3 f_s (LL+ IM) + f_ℓ /2

Service II Resistance: Composite ($0.95R_hF_{yf}$) or noncomposite ($0.80R_hF_{yf}$) stress capacity according to Article 6.10.4.2 (ksi).

$f_s + f_\ell / 3$ (Strength I): Sum of stresses as computed below on non-compact sections (ksi).
$1.25 (f_s DC1 + f_s DC2) + 1.5 f_s DW + 1.75 f_s (LL+ IM) + f_\ell /3$

$\Phi_f F_n$: Factored nominal flexural resistance of the section as specified in Article 6.10.7.2 or 6.10.8 as applicable (ksi).

V_f: Maximum factored shear range in span computed according to Article 6.10.10.

MODEL: SHEET
FILE NAME: C:\TRANSYSTEMS\PW_LOCAL\TRANSYSTEMS-PW-01\DMS20864\0990902_0903-62F94-062-STEELDET1.DGN

exp.

USER NAME =	DESIGNED - CCE	REVISED -	
	CHECKED - BAR	REVISED -	
PLOT SCALE =	DRAWN - MTR	REVISED -	
PLOT DATE =	CHECKED - BAR	REVISED -	

STATE OF ILLINOIS
DEPARTMENT OF TRANSPORTATION

STRUCTURAL STEEL DETAILS 1
STRUCTURE NOS. 099-0902 (EB) & 099-0903 (WB)

SHEET SA-62 OF SA-112 SHEETS

F.A.I. RTE.	SECTION	COUNTY	TOTAL SHEETS	SHEET NO.
80	2017-057F	WILL	1342	726
		CONTRACT NO. 62F94		
		ILLINOIS	FED. AID PROJECT	

10-27-2025, 16:49:16

TOP OF WEB ELEVATIONS (FOR FABRICATION ONLY)

Girder	℄ Brg. W. Abut.	℄ Splice 1	℄ Brg. Pier 1	℄ Splice 2	℄ Splice 3	℄ Brg. Pier 2	℄ Splice 4	℄ Splice 5	℄ Brg. Pier 3	℄ Splice 6	℄ Brg. E. Abut.
1	577.15	577.81	577.92	578.03	578.03	577.97	577.91	577.24	576.87	576.51	575.47
2	577.53	578.19	578.30	578.41	578.42	578.36	578.30	577.63	577.27	576.91	575.88
3	577.65	578.32	578.43	578.54	578.56	578.50	578.44	577.78	577.42	577.07	576.04
4	577.78	578.43	578.55	578.68	578.74	578.66	578.58	577.94	577.60	577.25	576.20
5	577.88	578.54	578.66	578.79	578.86	578.78	578.70	578.07	577.73	577.38	576.34
6	577.97	578.63	578.76	578.89	578.96	578.89	578.81	578.19	577.84	577.50	576.46
7	577.87	578.54	578.67	578.80	578.88	578.80	578.73	578.11	577.77	577.43	576.40
8	577.75	578.42	578.55	578.69	578.77	578.70	578.62	578.01	577.67	577.33	576.31
9	577.59	578.27	578.41	578.54	578.63	578.56	578.49	577.89	577.55	577.21	576.19
10	577.44	578.13	578.26	578.40	578.50	578.43	578.36	577.76	577.42	577.09	576.07
11	577.29	577.99	578.12	578.26	578.37	578.30	578.23	577.64	577.30	576.97	575.96
12	577.27	577.98	578.12	578.26	578.37	578.30	578.23	577.65	577.32	576.98	575.98
13	577.40	578.10	578.24	578.39	578.50	578.44	578.37	577.79	577.46	577.13	576.14
14	577.52	578.23	578.38	578.52	578.64	578.58	578.52	577.94	577.62	577.29	576.29
15	577.65	578.36	578.51	578.65	578.78	578.72	578.66	578.09	577.77	577.44	576.45
16	577.74	578.46	578.61	578.76	578.89	578.83	578.77	578.21	577.89	577.57	576.58
17	577.81	578.54	578.69	578.84	578.98	578.92	578.87	578.31	577.99	577.67	576.69
18	577.69	578.43	578.58	578.73	578.88	578.82	578.77	578.22	577.90	577.58	576.61
19	577.56	578.30	578.46	578.61	578.76	578.71	578.66	578.11	577.80	577.48	576.51
20	577.41	578.16	578.31	578.47	578.63	578.57	578.52	577.99	577.67	577.35	576.39
21	577.26	578.01	578.17	578.32	578.49	578.44	578.39	577.86	577.54	577.23	576.27
22	577.10	577.86	578.02	578.18	578.35	578.30	578.25	577.73	577.41	577.10	576.15

GIRDER REACTION TABLE - GIRDER 1						
		W. Abut.*	Pier 1	Pier 2	Pier 3	E. Abut.*
LLDF		0.504	0.504	0.504	0.504	0.504
OCF		1.035	1.000	1.000	1.000	1.035
R_{DC1}	(k)	86.05	178.70	179.96	174.28	83.70
R_{DC2}	(k)	18.46	56.11	84.32	103.85	25.47
R_{DW}	(k)	14.15	49.59	50.09	47.88	12.20
R_{LL}	(k)	52.44	104.90	106.52	103.69	50.86
R_{IM}	(k)	11.18	18.77	18.66	18.75	11.06
R_{Total} (Strength I)(Impact)	(k)	263.20	584.32	624.55	633.75	263.12
R_{Total} (Strength I)(No Impact)	(k)	243.63	551.47	591.90	600.94	243.76

GIRDER REACTION TABLE - GIRDERS 2 AND 3						
		W. Abut.*	Pier 1	Pier 2	Pier 3	E. Abut.*
LLDF		0.737	0.737	0.737	0.737	0.737
OCF		1.035	1.000	1.000	1.000	1.035
R_{DC1}	(k)	86.56	165.96	167.16	161.97	83.58
R_{DC2}	(k)	14.01	42.47	63.50	77.87	19.27
R_{DW}	(k)	14.16	49.57	50.10	47.86	12.22
R_{LL}	(k)	76.68	153.37	155.75	151.60	74.36
R_{IM}	(k)	16.35	27.44	27.28	27.42	16.19
R_{Total} (Strength I)(Impact)	(k)	309.76	651.31	683.78	684.88	305.36
R_{Total} (Strength I)(No Impact)	(k)	281.14	603.29	636.04	636.89	277.03

GIRDER REACTION TABLE - GIRDERS 11 AND 12						
		W. Abut.*	Pier 1	Pier 2	Pier 3	E. Abut.*
LLDF		0.680	0.680	0.680	0.680	0.680
OCF		1.035	1.000	1.000	1.000	1.035
R_{DC1}	(k)	88.06	175.88	175.73	166.53	82.25
R_{DC2}	(k)	10.00	35.02	35.44	33.52	8.80
R_{DW}	(k)	14.16	49.61	50.19	47.48	12.46
R_{LL}	(k)	70.77	141.61	143.28	138.44	68.65
R_{IM}	(k)	15.09	25.33	25.08	25.07	14.96
R_{Total} (Strength I)(Impact)	(k)	294.07	630.19	633.88	607.43	278.82
R_{Total} (Strength I)(No Impact)	(k)	267.66	585.86	589.99	563.55	252.64

GIRDER REACTION TABLE - GIRDERS 20 AND 21						
		W. Abut.*	Pier 1	Pier 2	Pier 3	E. Abut.*
LLDF		0.737	0.737	0.737	0.737	0.737
OCF		1.035	1.000	1.000	1.000	1.035
R_{DC1}	(k)	84.62	165.89	165.69	156.98	79.14
R_{DC2}	(k)	8.01	28.05	28.38	26.85	7.05
R_{DW}	(k)	14.16	49.61	50.19	47.48	12.46
R_{LL}	(k)	76.69	153.48	155.29	150.05	74.40
R_{IM}	(k)	16.35	27.45	27.18	27.17	16.20
R_{Total} (Strength I)(Impact)	(k)	299.84	633.47	637.20	611.14	284.97
R_{Total} (Strength I)(No Impact)	(k)	271.23	585.43	589.63	563.60	256.62

* RDC1 includes service reaction due to weight of approach slab and parapet on approach slab.

LLDF: For definition, see Sheet SA-62.

OCF: Obtuse Correction Factor according to Article 4.6.2.2.3c or as further simplified by IDOT provisions.

R_{DC1}: Un-factored reaction due to non-composite dead load (kip).

R_{DC2}: Un-factored reaction due to long-term composite (superimposed excluding future wearing surface) dead load (kip).

R_{DW}: Un-factored reaction due to long-term composite (superimposed future wearing surface only) dead load (kip).

R_{LL}: Un-factored live load reaction (kip).

R_{IM}: Un-factored dynamic load allowance (impact) (kip).

R_{Total} (Strength I)(Impact): Strength I load combination of factored design reactions (kip). $1.25\ (R_{DC1} + R_{DC2}) + 1.5R_{DW} + 1.75\ (R_{LL} + R_{IM})$

R_{Total} (Strength I)(No Impact): Strength I load combination of factored design reactions, not including dynamic load allowance (Impact) (kip). $1.25\ (R_{DC1} + R_{DC2}) + 1.5R_{DW} + 1.75\ (R_{LL})$

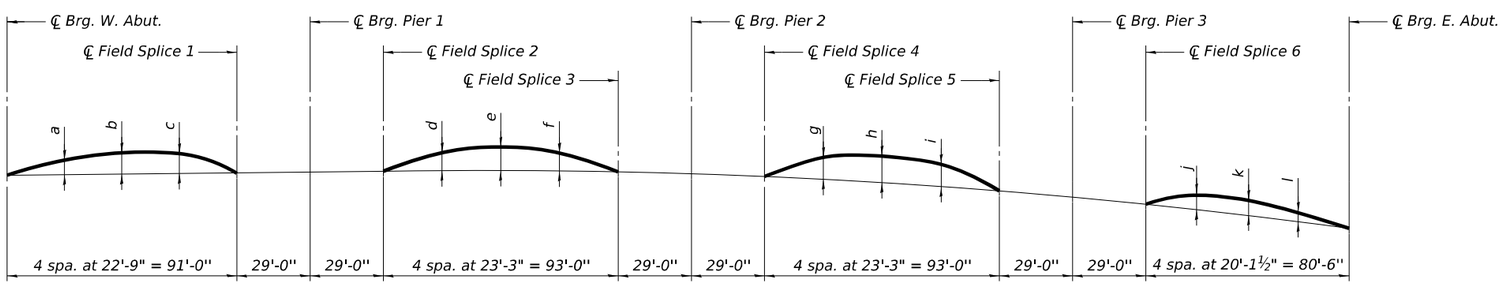

CAMBER DIAGRAM

Girder No.	a	b	c	d	e	f	g	h	i	j	k	l
1	2 1/4"	3 1/4"	3"	3 1/2"	4"	3 1/2"	3 3/4"	4 1/4"	3 3/4"	2 1/2"	2 1/2"	1 1/2"
2-3	2"	3 1/4"	3"	3 3/4"	4 1/4"	3 3/4"	3 1/4"	4"	3 1/4"	2 1/2"	2 1/2"	1 1/2"
4-10, 13-21	2"	3 1/4"	3"	3 1/2"	4"	3 1/2"	3 1/2"	4 1/4"	3 1/2"	2 1/4"	2 1/4"	1 1/4"
11-12	2 1/4"	3 1/2"	3 1/4"	3 1/2"	4 1/4"	3 1/2"	3 3/4"	4 1/4"	3 1/2"	2 1/2"	2 1/2"	1 1/2"
22	2"	3 1/4"	3"	3 1/2"	4"	3 1/2"	3 1/2"	4"	3 1/2"	2 1/4"	2 1/4"	1 1/4"

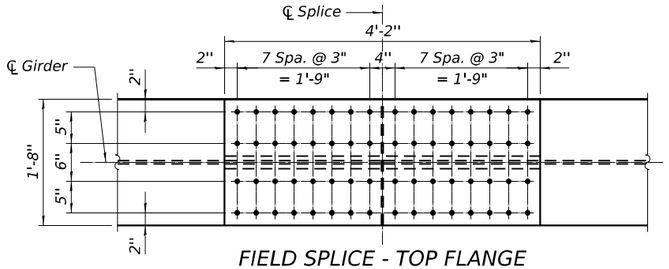

FIELD SPLICE - TOP FLANGE

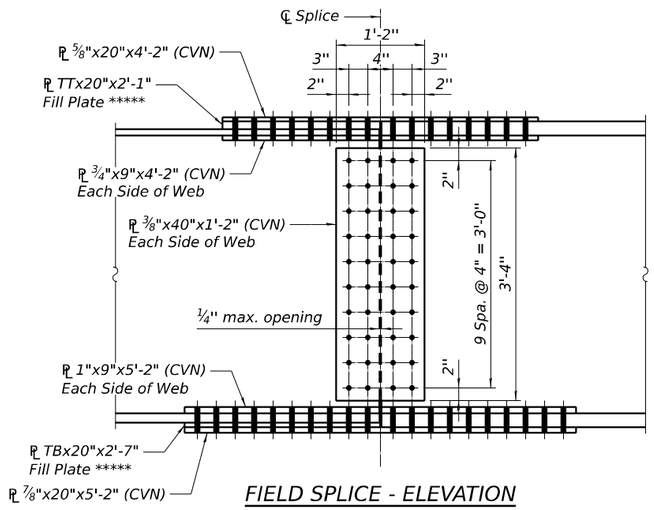

FIELD SPLICE - ELEVATION

(Looking North. Splices 1, 3, and 5 shown. Splices 2, 4, and 6 similar, opposite hand.)
(132 Required)

***** For fill plate thickness TT and TB, see table on this sheet.

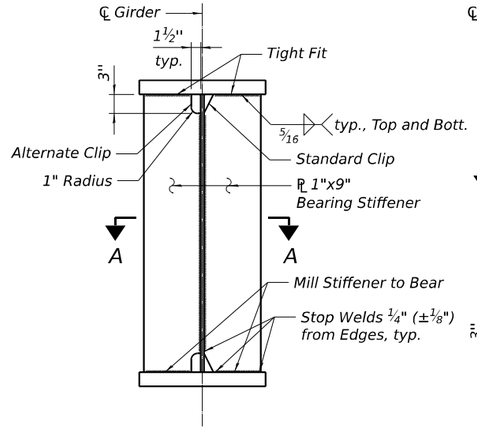

BEARING STIFFENER

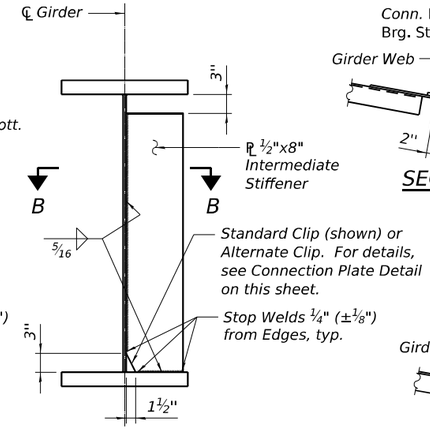

INTERMEDIATE STIFFENER

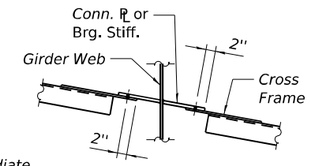

SECTION D-D

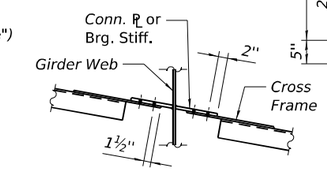

SECTION E-E

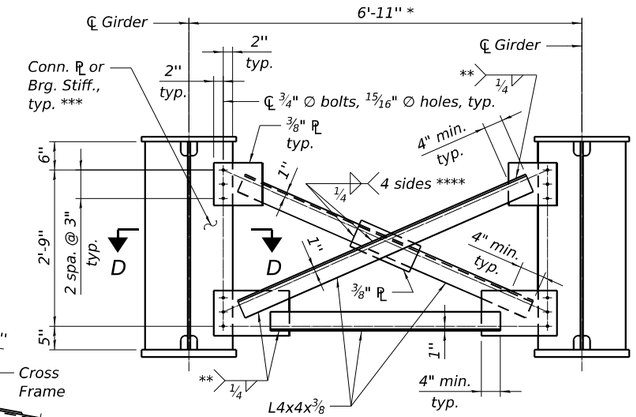

CROSS FRAME CF1

(534 Required)

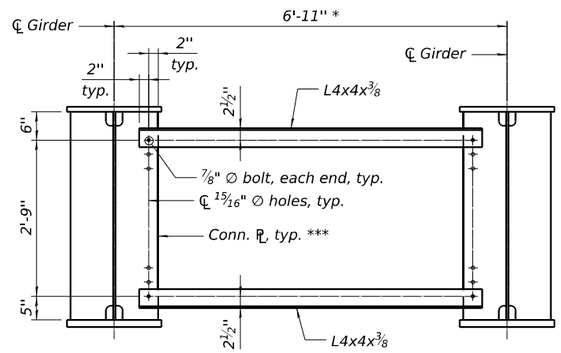

Note: Metallizing not required for temporary CF2 angle members.

CROSS FRAME CF2 AT STAGE CONST. LINES

(56 Required)

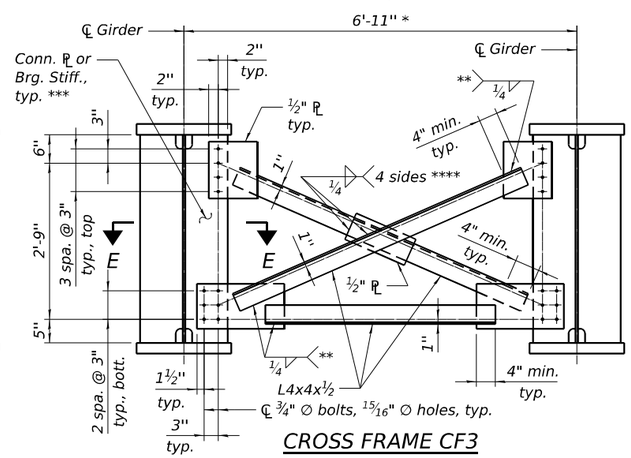

CROSS FRAME CF3

(86 Required)

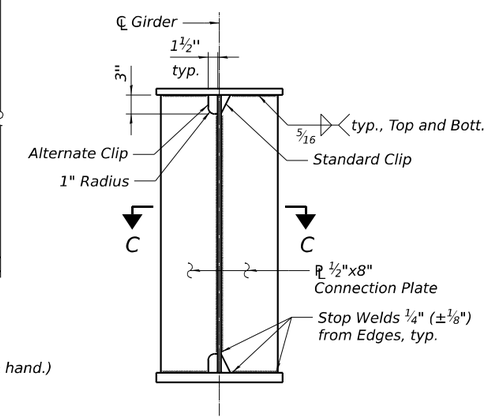

CONNECTION PLATE

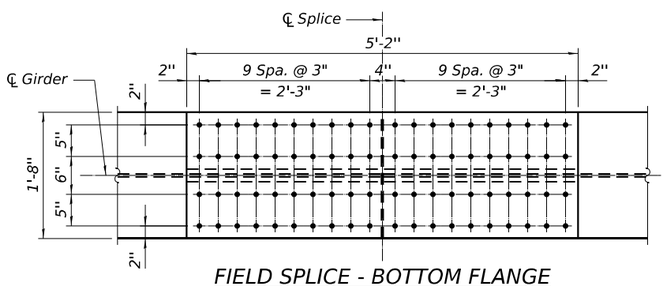

FIELD SPLICE - BOTTOM FLANGE

(See Note 5.)

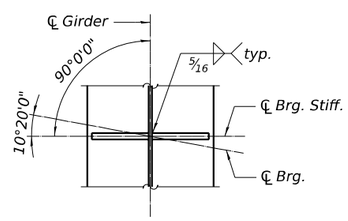

SECTION A-A AT ABUTMENTS

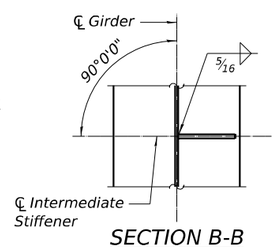

SECTION B-B

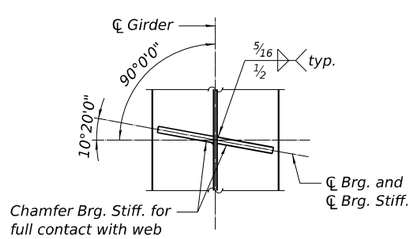

SECTION A-A AT PIERS

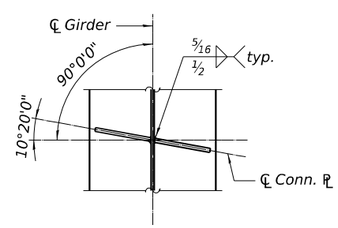

SECTION C-C

FIELD SPLICE FILL PLATE THICKNESS

Girders	Field Splice											
	1		2		3		4		5		6	
	TT	TB	TT	TB	TT	TB	TT	TB	TT	TB	TT	TB
1-3	1 1/4"	3/4"	1 1/4"	3/4"	1 1/2"	1"	1 1/2"	1"	1 1/2"	1"	1 1/2"	1"
4-22	1 1/4"	3/4"	1 1/4"	3/4"	1 1/4"	3/4"	1 1/4"	3/4"	1"	1/2"	1"	1/2"

* Measured perpendicular to girders.

** Fillet weld angles along three sides on one face of gusset plate; however, if cross frames are galvanized, weld all-around. Typical.

*** For plate orientation, weld details, and corner clip details, see bearing stiffener and connection plate details on this sheet.

**** If cross frames are galvanized, weld all-around.

Cross Frame Stage Construction Sequence:

1. Install CF2 cross frames in Stage II Construction prior to placing deck concrete.
2. CF2 cross frame bolts shall be finger-tight.
3. Remove CF2 cross frames and replace with CF1 cross frames in Stage II Construction after deck pour is complete.

Notes:

1. All structural steel shall be AASHTO M270 Grade 50 except angle members and gusset plates of CF1 and CF2 cross frames which may be Grade 36.
2. Load carrying components designated "CVN" shall conform to the Charpy-V-Notch Impact Energy Requirement, Zone 2.
3. Fasteners shall be ASTM F3125 Grade A325 Type 1, hot dip galvanized bolts.
4. Bolts for field splices shall be 7/8" diameter, holes 15/16" diameter.
5. Bolts in the bottom flange of field splices shall be installed with the bolt head below the flange and nut above the flange.
6. Two hardened washers required for each set of oversized holes in cross frame connections.
7. Omit cross frame connection plates on exterior side of Girders 1, 11, 12, and 22.

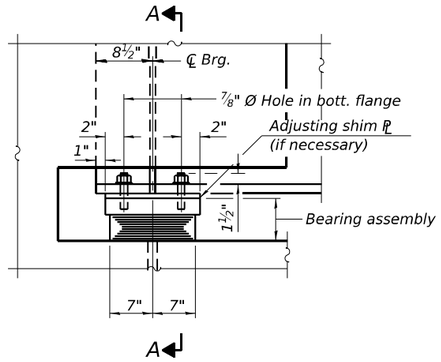

ELEVATION AT ABUT.

(West Abut. shown, East Abut. similar)

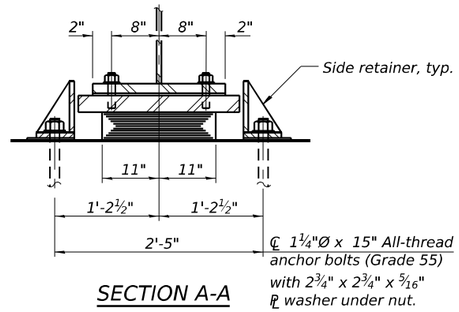

SECTION A-A

TYPE I ELASTOMERIC EXP. BRG. AT ABUTMENTS

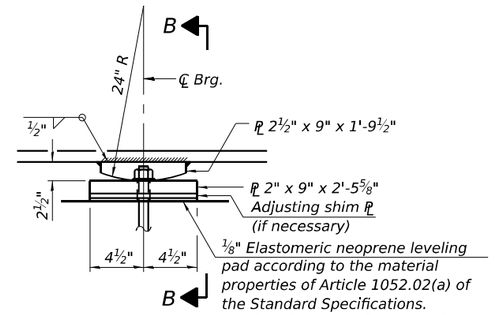

ELEVATION AT PIER

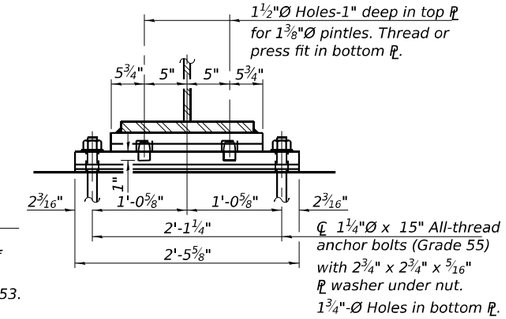

SECTION B-B

FIXED BEARING AT PIER 2

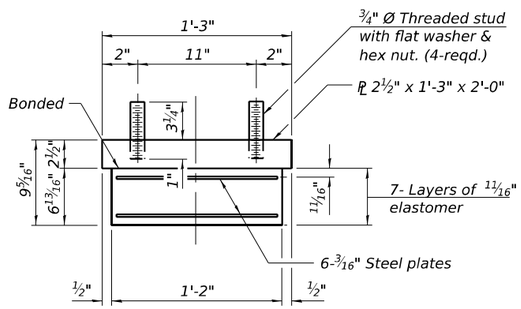

BEARING ASSEMBLY

Note:
Shim plates shall not be placed under bearing assembly.

Notes:

Installation of all bearing plates, shims, leveling pads, and pintles shall be included in the cost of Erecting Structural Steel.

Anchor bolts and side retainers at all supports shall be installed as each member is erected unless an equivalent temporary means of lateral restraint is used.

All bearing plates, side retainers, anchor bolts, nuts, washers and pintles shall be galvanized according to M111 or M232 as applicable.

The structural steel plates of the Bearing Assembly shall conform to the requirements of AASHTO M270 Grade 50.

Two ⅛ in. adjusting shims will be furnished as part of Contract 80C53 for each bearing in addition to all other plates or shims and placed as shown on bearing details.

The structural steel plates and pintles of the fixed bearing shall conform to the requirements of AASHTO M270 Grade 50.

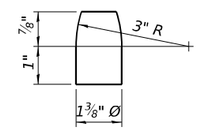

PINTLE

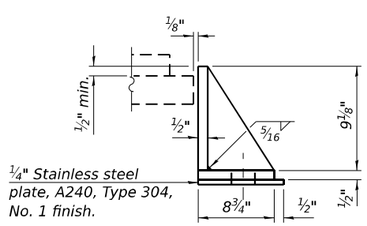

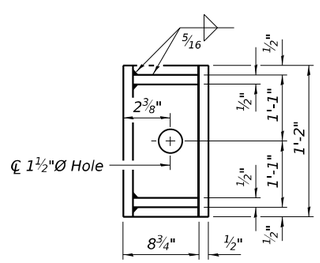

SIDE RETAINER

Equivalent rolled angle with stiffeners will be allowed in lieu of welded plates.

BILL OF MATERIAL

Item	Unit	Total
Erecting Elastomeric Bearing Assembly, Type I	Each	44
Anchor Bolts, 1¼"	Each	132

I-2E-1 5/15/2023

exp.

USER NAME =	DESIGNED - BAR	REVISED -	
	CHECKED - KK	REVISED -	
PLOT SCALE =	DRAWN - MTR	REVISED -	
PLOT DATE =	CHECKED - BAR	REVISED -	

STATE OF ILLINOIS
DEPARTMENT OF TRANSPORTATION

ELASTOMERIC EXPANSION AND FIXED BEARING DETAILS
STRUCTURE NOS. 099-0902 (EB) & 099-0903 (WB)

SHEET SA-65 OF SA-112 SHEETS

F.A.I. RTE.	SECTION	COUNTY	TOTAL SHEETS	SHEET NO.
80	2017-057F	WILL	1342	729
		CONTRACT NO. 62F94		
	ILLINOIS	FED. AID PROJECT		

MODEL: SHEET
FILE NAME: C:\TRANSYSTEMS\PW_LOCAL\TRANSYSTEMS-PW-01\DMS20864\09090902_0903-62F94-065-BRGDET1.DGN

10-27-2025, 16:49:26

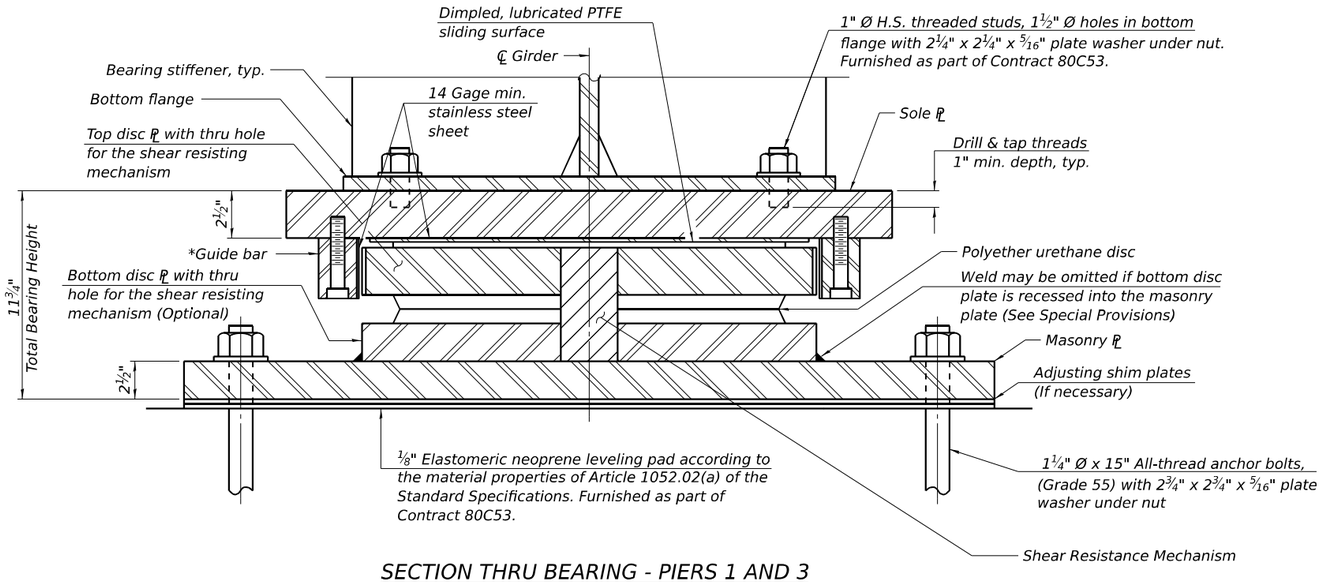

SECTION THRU BEARING - PIERS 1 AND 3

*As alternates to the bolted connection shown, the guide bars may be connected to the sole plate by groove welds or the guide bars and sole plate may be fabricated as a single piece.

DESIGN DATA

	Pier 1	Pier 3
Unfactored Vertical Dead Load Reaction (R_{DC})	208.4 kips	239.8 kips
Unfactored Vertical Wearing Surface Reaction (R_{DW})	49.57 kips	47.86 kips
Unfactored Vertical Live Load without Impact Reaction (R_{LL})	153.37 kips	151.6 kips
Maximum Strength or Extreme Event Lateral Reaction (H_u)	56.5 kips	64.8 kips
Maximum Strength Limit State Rotation (Θ_u according to Article 14.4.2.2)	0.0093 rad	0.0104 rad
Unfactored Design Thermal Movement from 50° F (ΔT)	0.82 in.	0.82 in.
Service I Factored Lateral Reaction	23.4 kips	23.6 kips
Service I Rotation	0.0026 rad	0.0034 rad
Strength I Factored Total Longitudinal Movement	1.98 in.	1.98 in.
Service I Factored Vertical Reaction	411.4 kips	439.3 kips
Strength I Factored Vertical Reaction	603.3 kips	636.9 kips

Service I Load Factors = 1.0DC + 1.0DW + 1.00LL
Strength I Load Factors = 1.25DC + 1.5DW + 1.75LL + 1.2TU
Extreme Event Load Factors = 1.0EQ

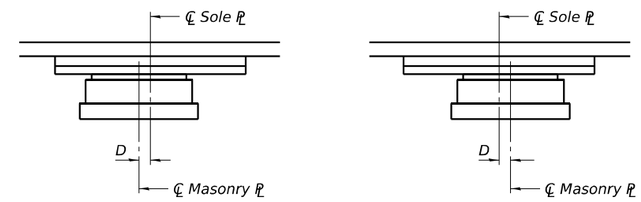

BELOW 50°F.
(Move masonry ℙ away from fixed bearing)

ABOVE 50°F.
(Move masonry ℙ toward fixed bearing)

SETTING ANCHOR BOLTS AT EXPANSION BEARING

D=⅛" per each 100' of expansion for every 15° temp. change from the normal temp. of 50° F.

NOTES:

1. Two ⅛ in. adjusting shims will be furnished as part of Contract 80C53 for each bearing in addition to all other plates or shims and placed as shown on bearing details. Shim plates not included in total bearing height.

2. Total bearing height is estimated based on manufacturer data. Actual bearing height may differ from contract plans. The Contractor shall be responsible for verifying bearing heights and adjusting seat elevations, if required, prior to placing pier or abutment concrete.

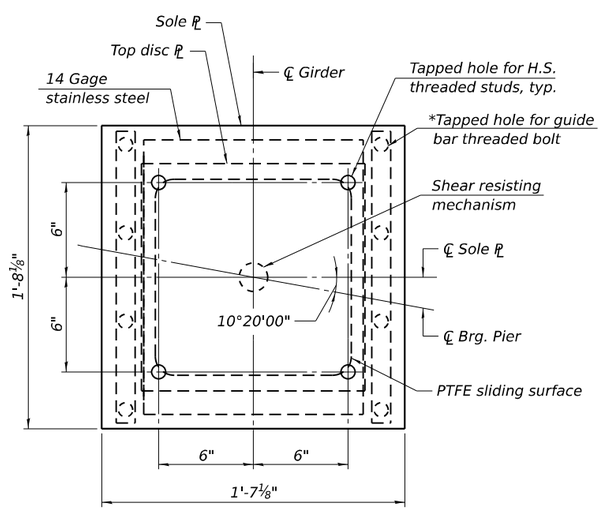

SOLE PLATE AND TOP DISC PLATE PLAN

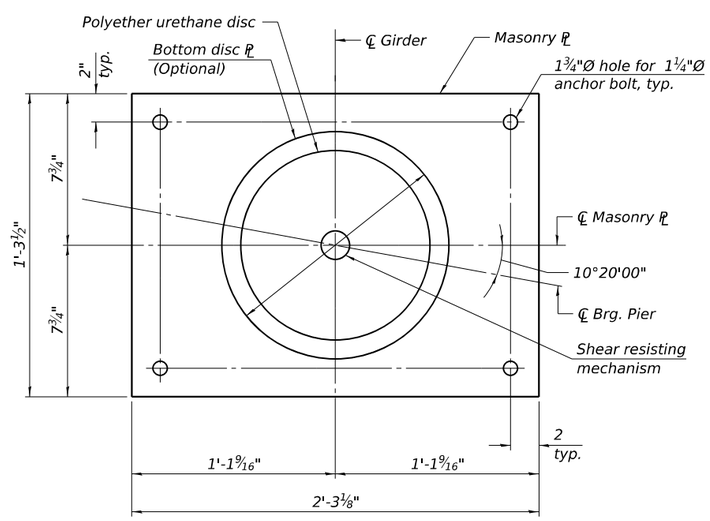

MASONRY PLATE AND BOTTOM DISC PLATE PLAN

BILL OF MATERIAL

	Item	Unit	Total
**	Erecting High Load Multi-Rotational Bearings, Disc, Guided Expansion-500k	Each	44
	Anchor Bolts, 1¼"	Each	176

** The value specified in the pay item name is an approximate vertical load capacity that is used for letting and bidding purposes only. Exact bearing capacity will vary subject to final design.

HLMR-D-GE 5/15/2023

MODEL: SHEET
FILE NAME: C:\TRANSYSTEMS\PW_LOCAL\TRANSYSTEMS-PW-01\DMS20864\0990902_0903-62F94-066-BRGDET2.DGN

exp.

USER NAME =	DESIGNED - BAR	REVISED -	
	CHECKED - KK	REVISED -	
PLOT SCALE =	DRAWN - MTR	REVISED -	
PLOT DATE =	CHECKED - BAR	REVISED -	

STATE OF ILLINOIS
DEPARTMENT OF TRANSPORTATION

GUIDED EXPANSION HLMR DISC BEARING DETAILS
STRUCTURE NOS. 099-0902 (EB) & 099-0903 (WB)

SHEET SA-66 OF SA-112 SHEETS

F.A.I. RTE.	SECTION	COUNTY	TOTAL SHEETS	SHEET NO.
80	2017-057F	WILL	1342	730
		CONTRACT NO. 62F94		
		ILLINOIS	FED. AID PROJECT	

10-27-2025, 16:49:28

BRG. SEAT ELEVATIONS

Girder	Elev.
12	572.71
13	572.83
14	572.95
15	573.08
16	573.17
17	573.25
18	573.13
19	573.00
20	572.84
21	572.69
22	572.54

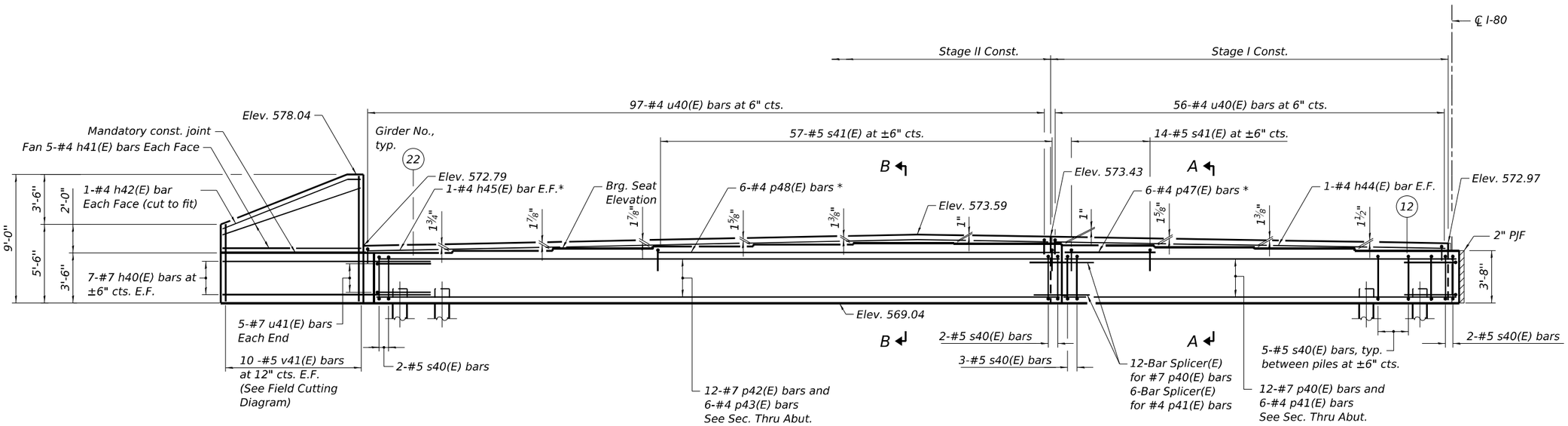

* Cut to fit as required.

ELEVATION

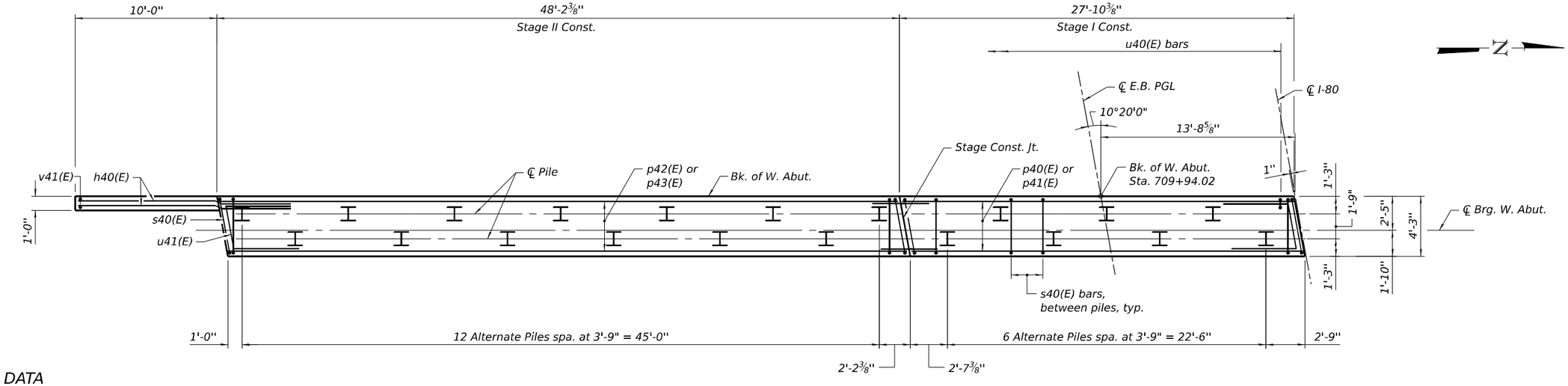

PILE DATA

Type: HP 12x53 with pile shoes
Nominal Required Bearing: 418 kips
Factored Resistance Available: 230 kips
Est. Length: 61'
No. Production Piles: 19
No. Test Piles: 1

PLAN - PILE CAP

Notes:
1. For Section A-A and B-B, see Sheet SA-73.
2. For plan dimensions, see Sheet SA-71.
3. Pour steps monolithically with cap.
4. For Bar Splicer details, see Sheet SA-92.

MODEL: SHEET
FILE NAME: C:\TRANSYSTEMS\PW_LOCAL\TRANSYSTEMS-PW-01\DMS20864\0990902_0903-62F94-067-WABUTEB.DGN
10-27-2025, 16:49:31

HNTB

USER NAME =	DESIGNED - SH	REVISED -	
	CHECKED - APC	REVISED -	
PLOT SCALE =	DRAWN - LK	REVISED -	
PLOT DATE =	CHECKED - SH	REVISED -	

STATE OF ILLINOIS
DEPARTMENT OF TRANSPORTATION

WEST ABUTMENT EB
STRUCTURE NO. 099-0902 (EB)
SHEET SA-67 OF SA-112 SHEETS

F.A.I. RTE.	SECTION	COUNTY	TOTAL SHEETS	SHEET NO.
80	2017-057F	WILL	1342	731
		CONTRACT NO. 62F94		
	ILLINOIS	FED. AID PROJECT		

BRG. SEAT ELEVATIONS

Girder	Elev.
1	572.59
2	572.96
3	573.09
4	573.21
5	573.31
6	573.40
7	573.30
8	573.18
9	573.03
10	572.87
11	572.72

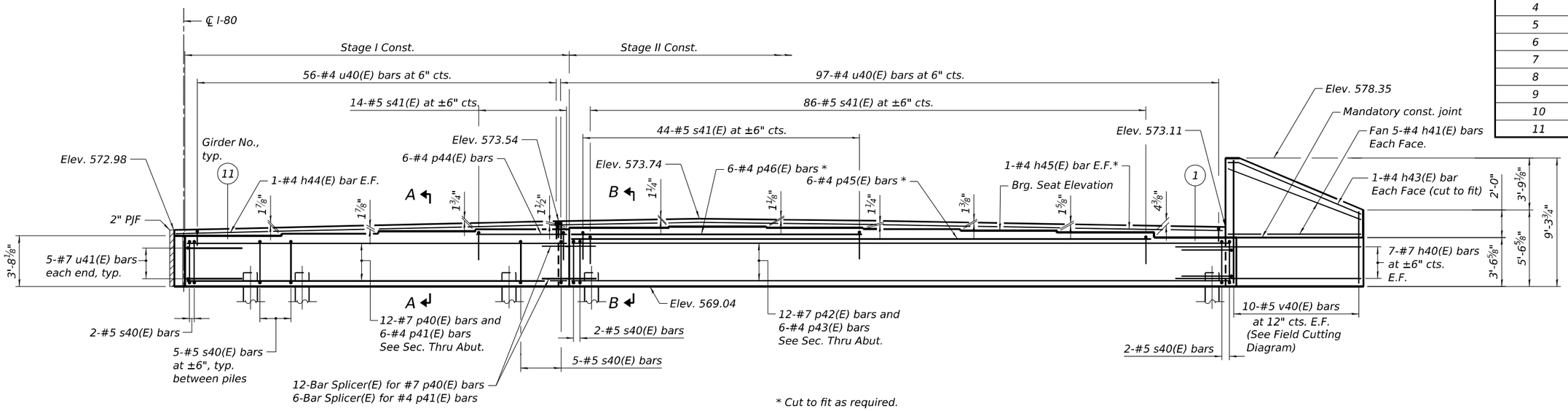

* Cut to fit as required.

ELEVATION

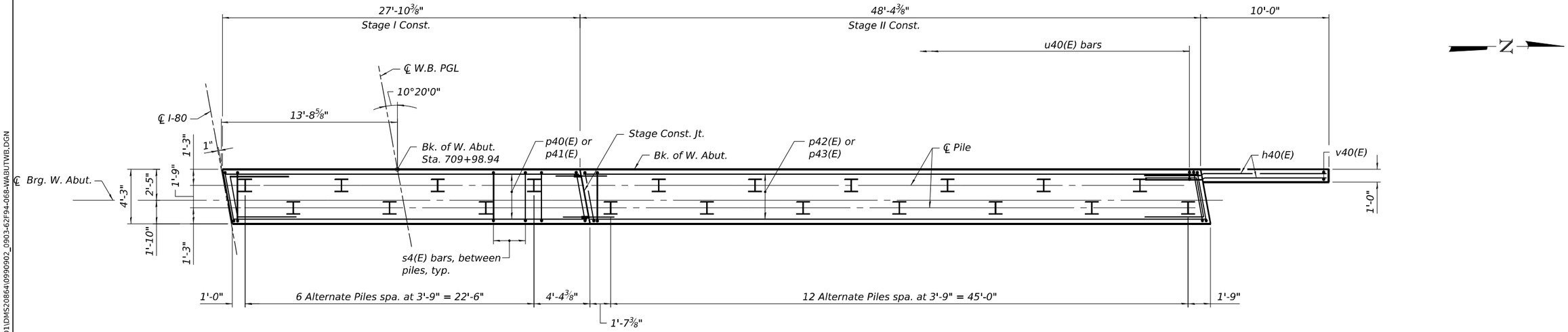

PILE DATA

Type: HP 12x53 with pile shoes
Nominal Required Bearing: 418 kips
Factored Resistance Available: 230 kips
Est. Length: 57'
No. Production Piles: 19
No. Test Piles: 1

PLAN - PILE CAP

Notes:
1. For Section A-A and B-B, see Sheet SA-73.
2. For plan dimensions, see Sheet SA-71.
3. Pour steps monolithically with cap.
4. For Bar Splicer details, see Sheet SA-92.

MODEL: SHEET
FILE NAME: C:\TRANSYSTEMS\PW_LOCAL\TRANSYSTEMS-PW-01\DMS20864\0990902_0903-62F94-068-WABUTWB.DGN
10-27-2025, 16:49:34

HNTB

USER NAME =	DESIGNED - SH	REVISED -	
	CHECKED - APC	REVISED -	
PLOT SCALE =	DRAWN - LK	REVISED -	
PLOT DATE =	CHECKED - SH	REVISED -	

STATE OF ILLINOIS
DEPARTMENT OF TRANSPORTATION

WEST ABUTMENT WB
STRUCTURE NO. 099-0903 (WB)
SHEET SA-68 OF SA-112 SHEETS

F.A.I. RTE.	SECTION	COUNTY	TOTAL SHEETS	SHEET NO.
80	2017-057F	WILL	1342	732
		CONTRACT NO. 62F94		
	ILLINOIS	FED. AID PROJECT		

BRG. SEAT ELEVATIONS

Girder	Elev.
1	570.91
2	571.32
3	571.47
4	571.63
5	571.77
6	571.90
7	571.83
8	571.74
9	571.62
10	571.51
11	571.39

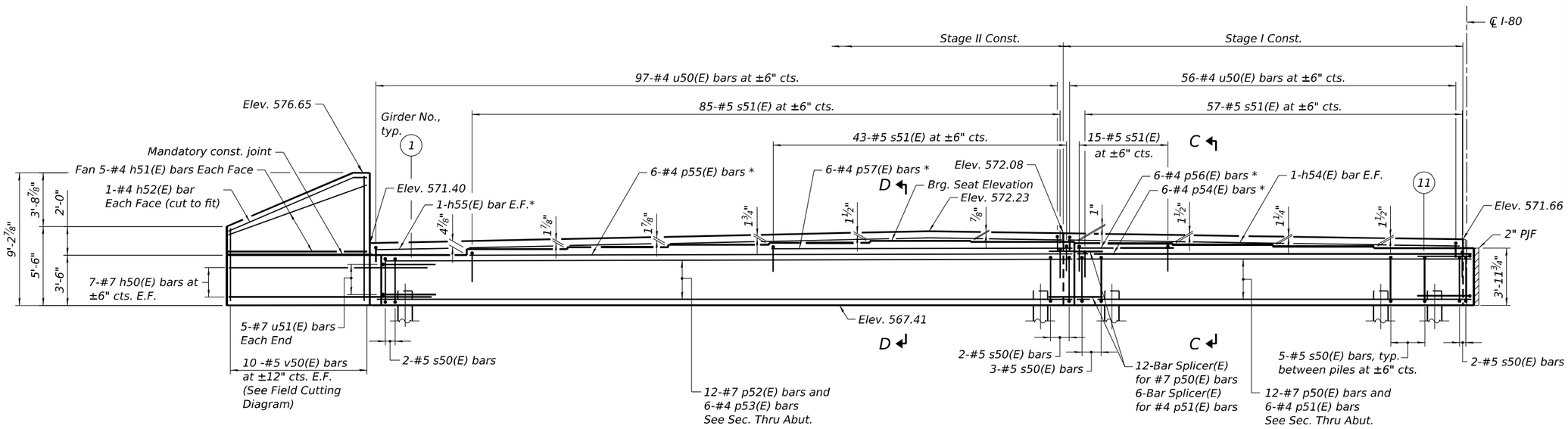

* Cut to fit as required.

ELEVATION

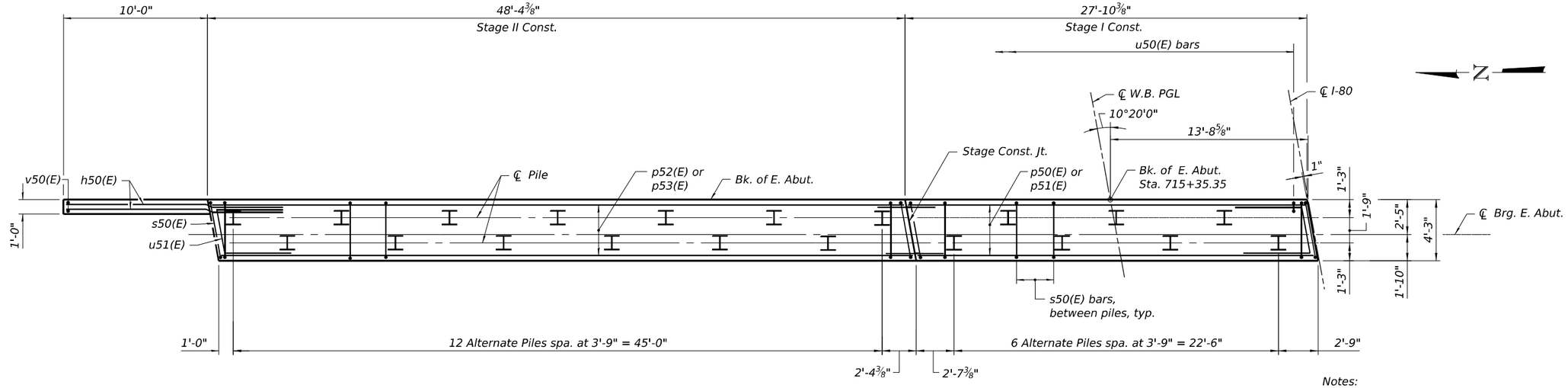

PILE DATA

Type: HP 12x53 with pile shoes
Nominal Required Bearing: 418 kips
Factored Resistance Available: 230 kips
Est. Length: 61'
No. Production Piles: 19
No. Test Piles: 1

PLAN - PILE CAP

Notes:

1. For Section C-C and D-D see Sheet SA-73.
2. For Plan dimensions, see Sheet SA-72.
3. Pour steps monothically with cap.
4. For Bar Splicer details, see Sheet SA-92.

MODEL: SHEET
FILE NAME: C:\TRANSYSTEMS\PW_LOCAL\TRANSYSTEMS-PW-01\DMS20864\0990902_0903-62F94-069-EABUTWB.DGN

HNTB

USER NAME =	DESIGNED - SH	REVISED -	
	CHECKED - APC	REVISED -	
PLOT SCALE =	DRAWN - LK	REVISED -	
PLOT DATE =	CHECKED - SH	REVISED -	

STATE OF ILLINOIS
DEPARTMENT OF TRANSPORTATION

EAST ABUTMENT WB
STRUCTURE NO. 099-0903 (WB)

SHEET SA-69 OF SA-112 SHEETS

F.A.I. RTE.	SECTION	COUNTY	TOTAL SHEETS	SHEET NO.
80	2017-057F	WILL	1342	733

CONTRACT NO. 62F94

ILLINOIS FED. AID PROJECT

10-27-2025, 16:49:36

BRG. SEAT ELEVATIONS

Girder	Elev.
12	571.41
13	571.57
14	571.73
15	571.89
16	572.02
17	572.12
18	572.04
19	571.94
20	571.82
21	571.70
22	571.59

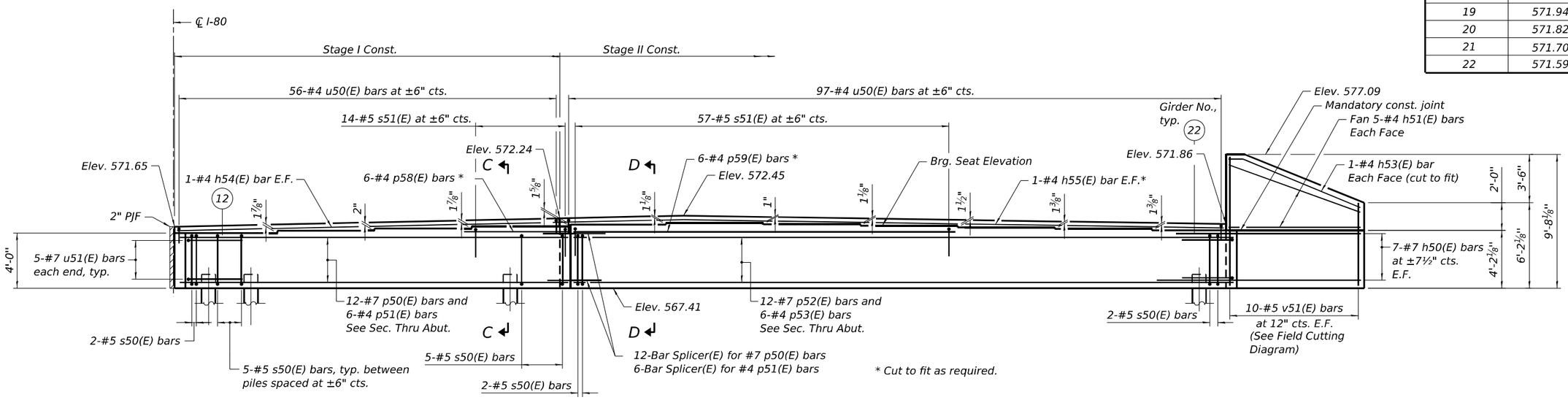

ELEVATION

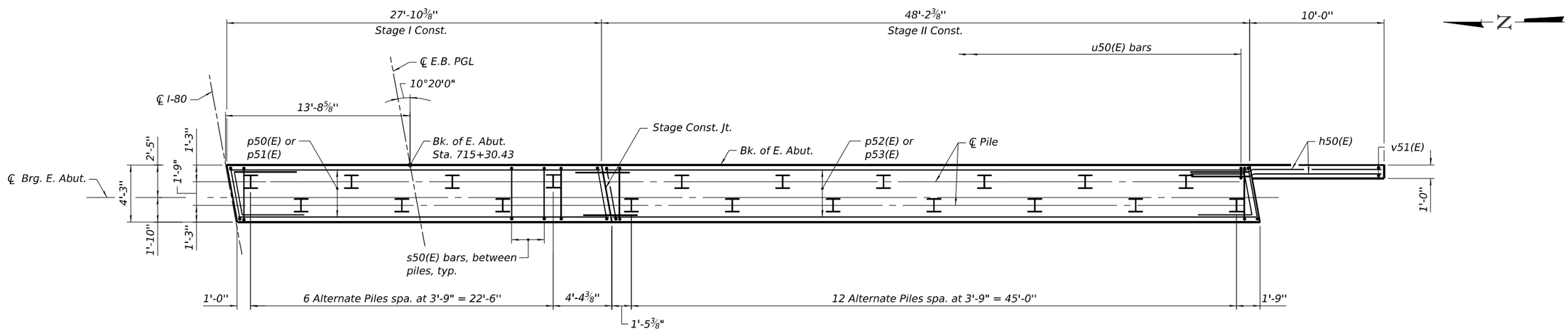

PLAN - PILE CAP

PILE DATA

Type: HP 12x53 with pile shoes
Nominal Required Bearing: 418 kips
Factored Resistance Available: 230 kips
Est. Length: 59'
No. Production Piles: 19
No. Test Piles: 1

Notes:

1. For Section C-C and D-D see Sheet SA-73.
2. For Plan dimensions, see Sheet SA-72.
3. Pour steps monothically with cap.
4. For Bar Splicer details, see Sheet SA-92.

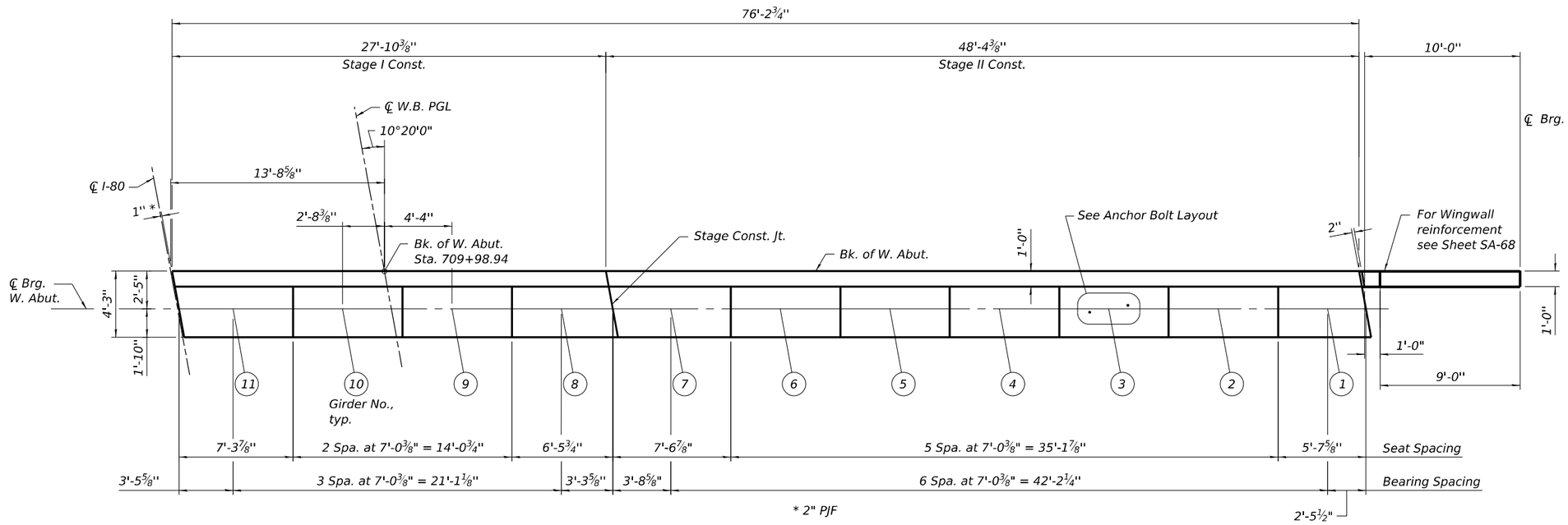

TOP PLAN - WEST ABUTMENT

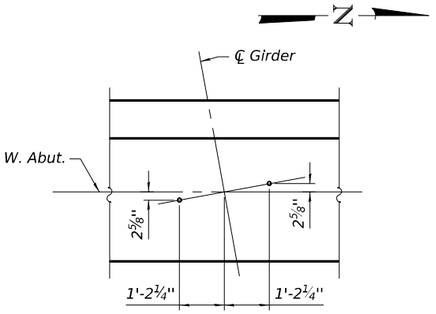

ANCHOR BOLT LAYOUT WEST ABUTMENT

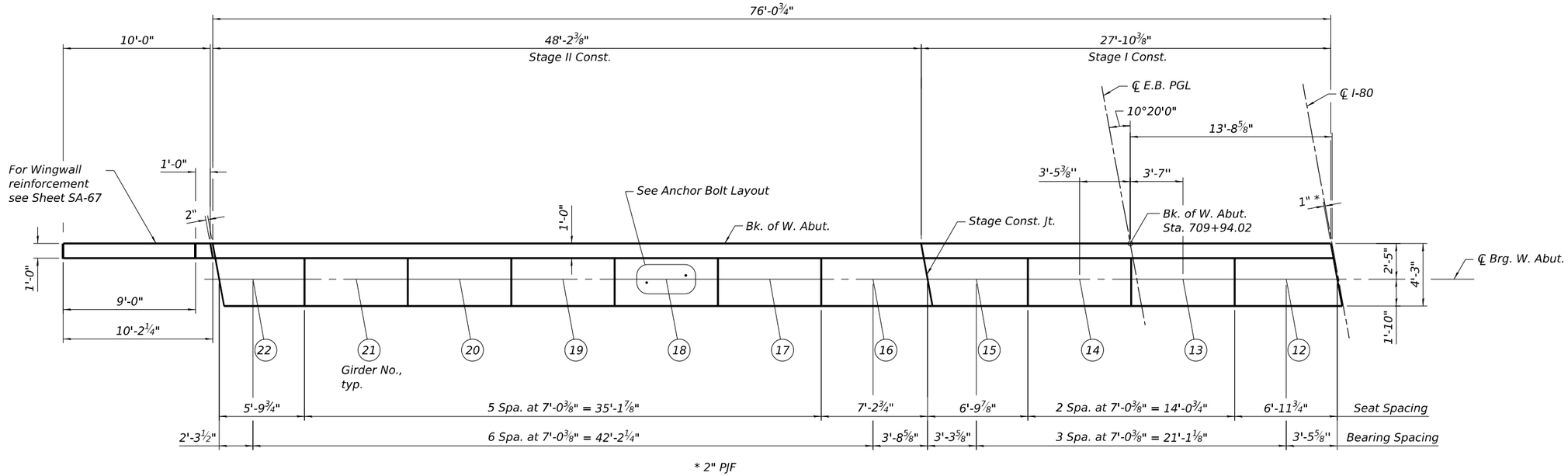

TOP PLAN - WEST ABUTMENT

MODEL: SHEET
FILE NAME: C:\TRANSYSTEMS\PW_LOCAL\TRANSYSTEMS-PW-01\DMS20864\0990902_0903-62F94-071-ABUTDET1.DGN

10-27-2025, 16:49:41

HNTB

USER NAME =	DESIGNED - SH	REVISED -	
	CHECKED - APC	REVISED -	
PLOT SCALE =	DRAWN - LK	REVISED -	
PLOT DATE =	CHECKED - SH	REVISED -	

STATE OF ILLINOIS
DEPARTMENT OF TRANSPORTATION

ABUTMENT DETAILS 1
STRUCTURE NOS. 099-0902 (EB) & 099-0903 (WB)

SHEET SA-71 OF SA-112 SHEETS

F.A.I. RTE.	SECTION	COUNTY	TOTAL SHEETS	SHEET NO.
80	2017-057F	WILL	1342	735
		CONTRACT NO. 62F94		
		ILLINOIS	FED. AID PROJECT	

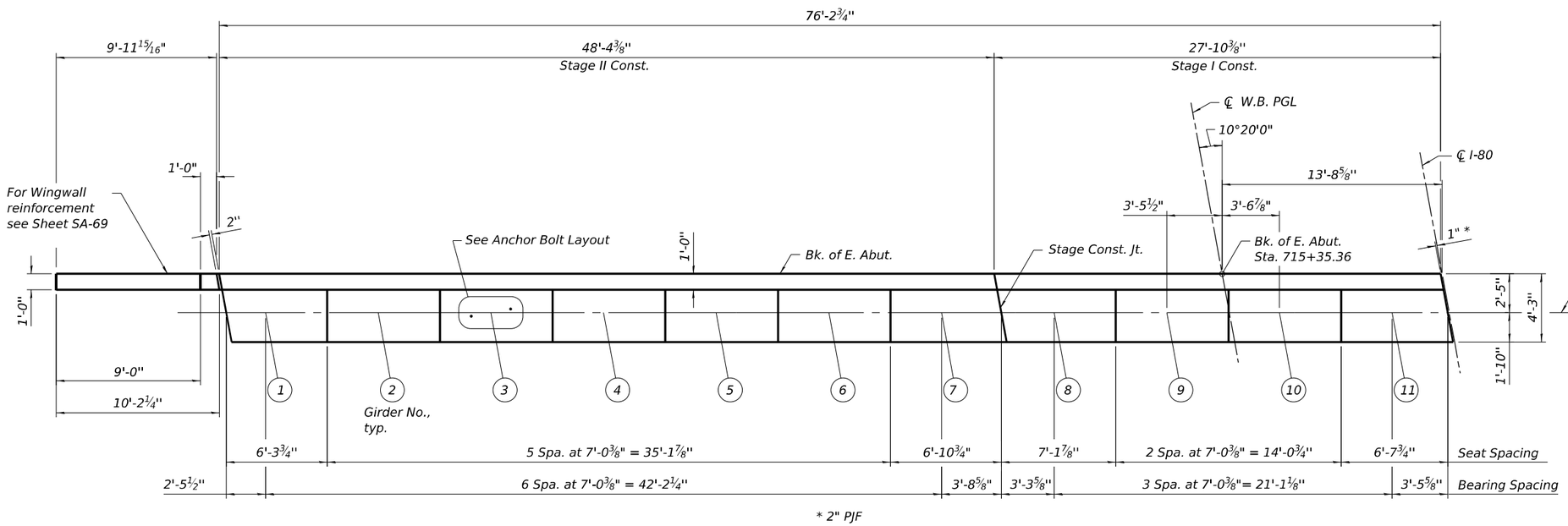

TOP PLAN - EAST ABUTMENT

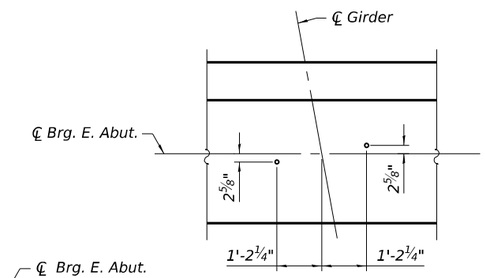

ANCHOR BOLT LAYOUT EAST ABUTMENT

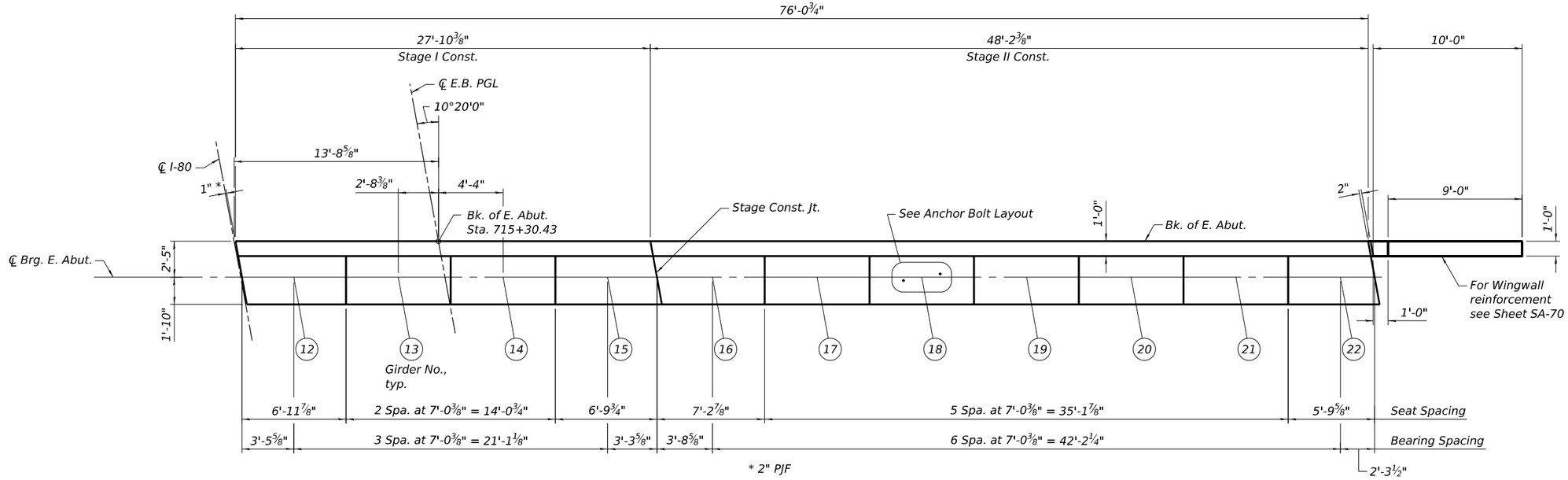

TOP PLAN - EAST ABUTMENT

MODEL: SHEET
FILE NAME: C:\TRANSYSTEMS\PW_LOCAL\TRANSYSTEMS-PW-01\DMS20864\0990902_0903-62F94-072-ABUTDET2.DGN

10-27-2025, 16:49:44

HNTB	USER NAME =	DESIGNED - SH	REVISED -
		CHECKED - APC	REVISED -
	PLOT SCALE =	DRAWN - LK	REVISED -
	PLOT DATE =	CHECKED - SH	REVISED -

STATE OF ILLINOIS
DEPARTMENT OF TRANSPORTATION

ABUTMENT DETAILS 2
STRUCTURE NOS. 099-0902 (EB) & 099-0903 (WB)

SHEET SA-72 OF SA-112 SHEETS

F.A.I. RTE.	SECTION	COUNTY	TOTAL SHEETS	SHEET NO.
80	2017-057F	WILL	1342	736
		CONTRACT NO. 62F94		
	ILLINOIS	FED. AID PROJECT		

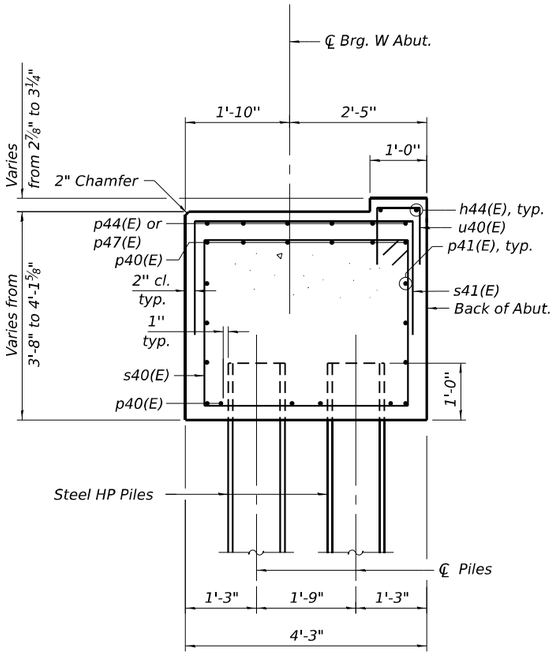

SECTION A-A

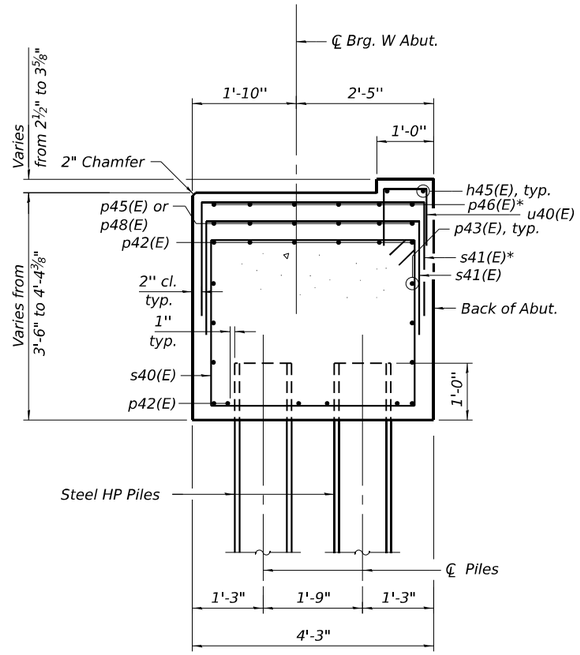

SECTION B-B

* for West Abutment WB only

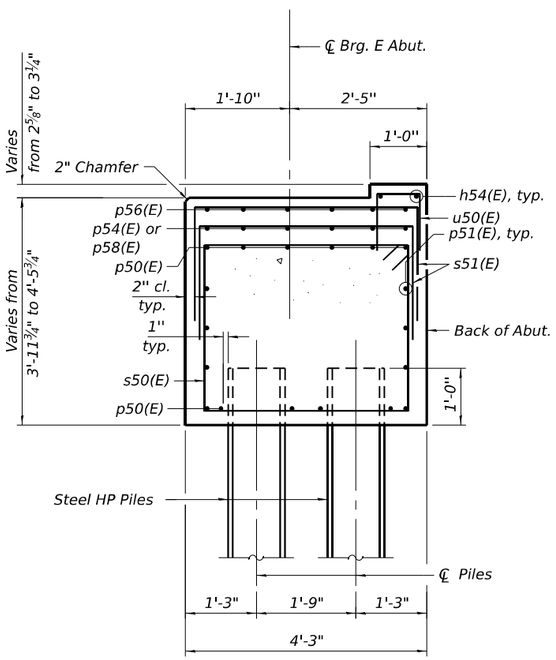

SECTION C-C

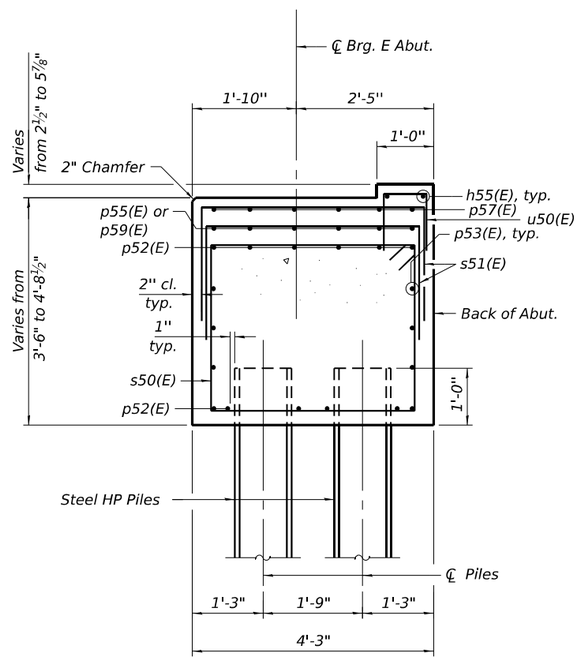

SECTION D-D

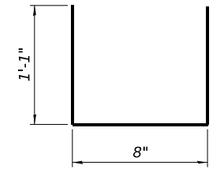

BAR u40(E) & u50(E)

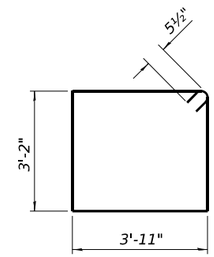

BARS s40(E) & s50(E)

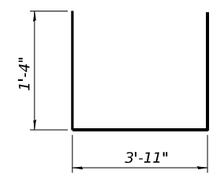

BAR s41(E) & s51(E)

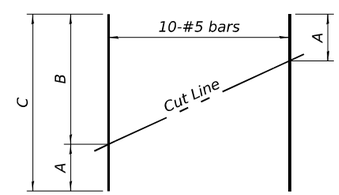

BAR v40(E), v41(E), v50(E) & v51(E)

FIELD CUTTING DIAGRAM

Order bars full length. Cut as shown and use remainder of bars in opposite face.

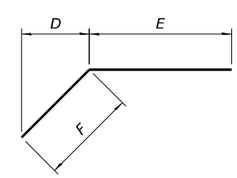

BAR h42(E), h43(E), h52(E) & h53(E)

WEST ABUTMENT BILL OF MATERIAL

Bar	No.	Size	Length	Shape
h40(E)	28	#7	13'-4"	
h41(E)	20	#4	9'-8"	
h42(E)	2	#4	10'-4"	
h43(E)	2	#4	10'-4"	
h44(E)	4	#4	27'-6"	
h45(E)	4	#4	48'-0"	
p40(E)	24	#7	27'-6"	
p41(E)	12	#4	27'-6"	
p42(E)	24	#7	48'-0"	
p43(E)	12	#4	48'-0"	
p44(E)	6	#4	6'-2"	
p45(E)	6	#4	42'-5"	
p46(E)	6	#4	21'-4"	
p47(E)	6	#4	6'-6"	
p48(E)	6	#4	28'-0"	
s40(E)	200	#5	15'-1"	
s41(E)	215	#5	6'-7"	
u40(E)	306	#4	2'-10"	
u41(E)	20	#7	12'-6"	
v40(E)	10	#5	14'-1"	
v41(E)	10	#5	13'-10"	
Concrete Structures			Cu. Yd.	99.5
Reinforcement Bars, Epoxy Coated			Pound	11,860
Furnishing Steel Piles, HP12x53			Foot	2,242
Driving Piles			Foot	2,242
Test Pile Steel HP12x53			Each	2
Pile Shoes			Each	40

For details of Bar Splicers, see sheet SA-92.
For details of piles, see sheet SA-91.

EAST ABUTMENT BILL OF MATERIAL

Bar	No.	Size	Length	Shape
h50(E)	28	#7	13'-4"	
h51(E)	20	#4	9'-8"	
h52(E)	2	#4	10'-4"	
h53(E)	2	#4	10'-3"	
h54(E)	4	#4	27'-6"	
h55(E)	4	#4	48'-0"	
p50(E)	24	#7	27'-6"	
p51(E)	12	#4	27'-6"	
p52(E)	24	#7	48'-0"	
p53(E)	12	#4	48'-0"	
p54(E)	6	#4	27'-6"	
p55(E)	6	#4	41'-9"	
p56(E)	6	#4	6'-10"	
p57(E)	6	#4	20'-8"	
p58(E)	6	#4	6'-6"	
p59(E)	6	#4	28'-0"	
s50(E)	200	#5	15'-1"	
s51(E)	271	#5	6'-7"	
u50(E)	306	#4	2'-10"	
u51(E)	20	#7	12'-6"	
v50(E)	10	#5	14'-0"	
v51(E)	10	#5	15'-2"	
Concrete Structures			Cu. Yd.	107.1
Reinforcement Bars, Epoxy Coated			Pound	12,370
Furnishing Steel Piles, HP12x53			Foot	2,280
Driving Piles			Foot	2,280
Test Pile Steel HP12x53			Each	2
Pile Shoes			Each	40

A, B & C DIMENSIONS

Bar	A	B	C
v40(E)	5'-2"	8'-11"	14'-1"
v41(E)	5'-2"	8'-8"	13'-10"
v50(E)	5'-2"	8'-10"	14'-0"
v51(E)	5'-10"	9'-4"	15'-2"

D, E & F DIMENSIONS

Bar	D	E	F
h42(E)	8'-8"	1'-0"	9'-4"
h43(E)	8'-10"	9"	9'-7"
h52(E)	8'-8"	11"	9'-5"
h53(E)	8'-6"	1'-1"	9'-2"

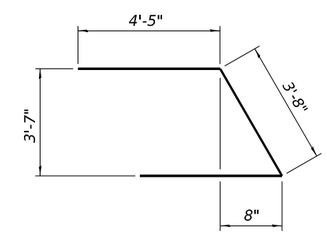

BAR u41(E) & u51(E)

Notes:
1. Space reinforcement in pile cap to miss piles.

MODEL: SHEET
FILE NAME: C:\TRANSYSTEMS\PW_LOCAL\TRANSYSTEMS-PW-01\DMS20864\0990902_0903-62F94-073-ABUTDET3.DGN

10-27-2025, 16:49:46

HNTB

USER NAME =	DESIGNED - SH	REVISED -	
	CHECKED - APC	REVISED -	
PLOT SCALE =	DRAWN - LK	REVISED -	
PLOT DATE =	CHECKED - SH	REVISED -	

STATE OF ILLINOIS
DEPARTMENT OF TRANSPORTATION

ABUTMENT DETAILS 3
STRUCTURE NOS. 099-0902 (EB) & 099-0903 (WB)

SHEET SA-73 OF SA-112 SHEETS

F.A.I. RTE.	SECTION	COUNTY	TOTAL SHEETS	SHEET NO.
80	2017-057F	WILL	1342	737
		CONTRACT NO. 62F94		
		ILLINOIS	FED. AID PROJECT	

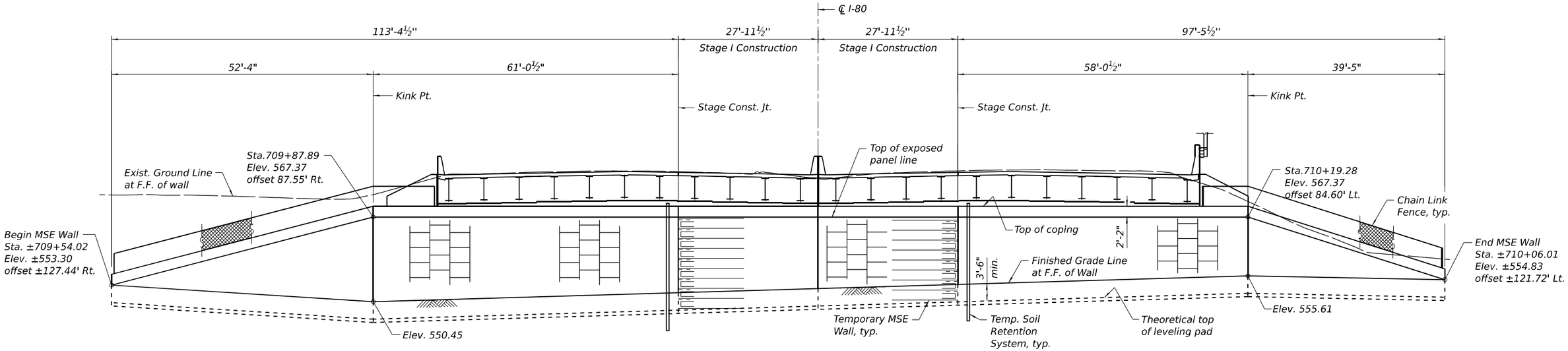

WEST ABUTMENT WALL

Developed elevation along front face of wall

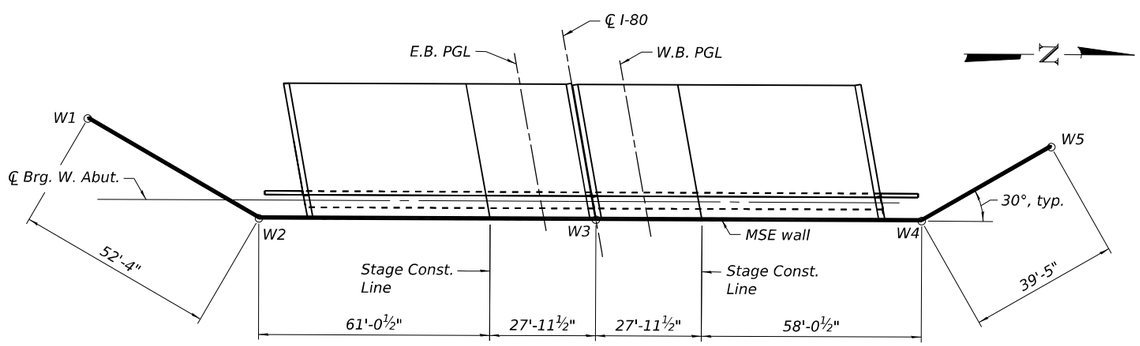

PLAN

STATIONS & OFFSETS

Location	Point	Station	Offset
South MSE	W1	709+54.02	127.44 Rt
	W2	709+87.89	87.55 Rt
	W3	710+03.85	0.00 Rt
North MSE	W4	710+19.28	84.60 Lt
	W5	710+06.01	121.72 Lt

BILL OF MATERIAL

Item	Unit	Quantity
Mechanically Stabilized Earth Retaining Wall	Sq Ft	4,119
Structure Excavation	Cu Yd	6,160
Chain Link Fence, 4' Attached to Structure	Ft	113

MODEL: SHEET
FILE NAME: C:\TRANSYSTEMS\PW_LOCAL\TRANSYSTEMS-PW-01\DMS20864\0990902_0903-62F94-074-WMSE.DGN

10-27-2025, 16:49:50

HNTB

USER NAME =	DESIGNED - MVV	REVISED -	
	CHECKED - APC	REVISED -	
PLOT SCALE =	DRAWN - LK	REVISED -	
PLOT DATE =	CHECKED - MVV	REVISED -	

STATE OF ILLINOIS
DEPARTMENT OF TRANSPORTATION

MSE WALL AT WEST ABUTMENT
STRUCTURE NOS. 099-0902 (EB) & 099-0903 (WB)

SHEET SA-74 OF SA-112 SHEETS

F.A.I. RTE.	SECTION	COUNTY	TOTAL SHEETS	SHEET NO.
80	2017-057F	WILL	1342	738

CONTRACT NO. 62F94

ILLINOIS FED. AID PROJECT

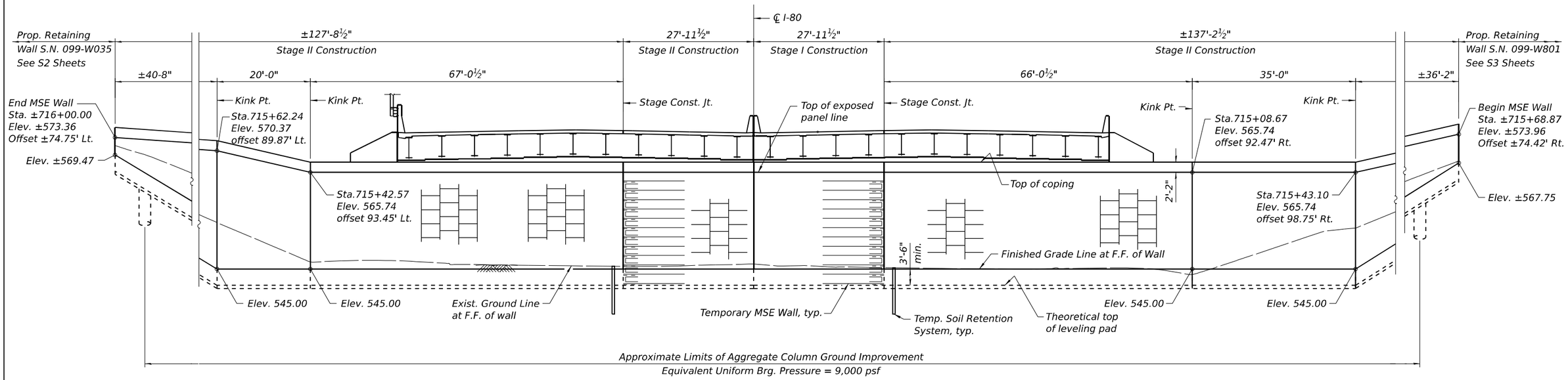

EAST MSE WALL ELEVATION

Developed elevation along Front Face of wall

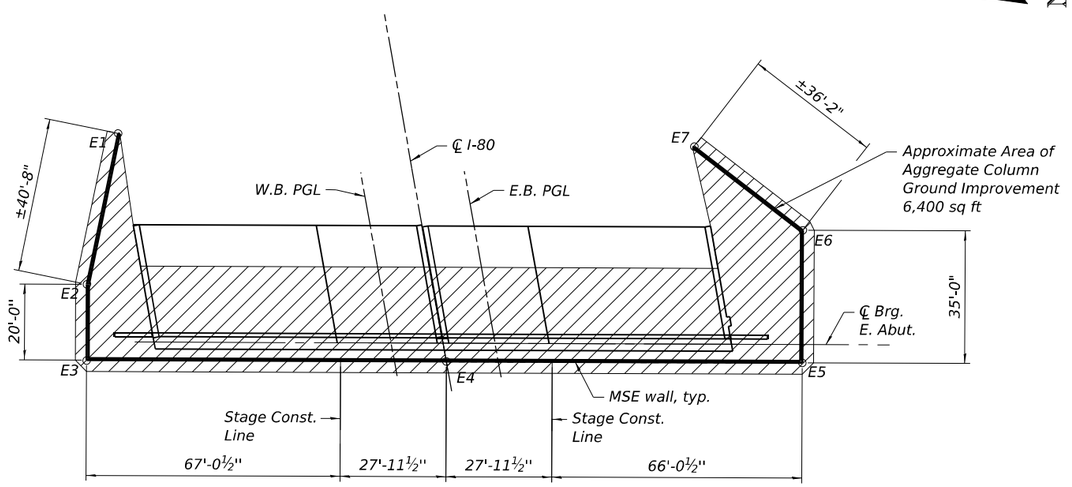

PLAN

STATIONS & OFFSETS

Location	Point	Station	Offset
North MSE	E1	716+00.00	74.75 Lt
	E2	715+62.24	89.87 Lt
	E3	715+42.57	93.45 Lt
	E4	715+25.53	0.00
South MSE	E5	715+08.67	92.47 Rt
	E6	715+43.10	98.75 Rt
	E7	715+69.87	74.42 Rt

LEGEND:

Approximate Limits of Aggregate Column Ground Improvements

Notes:

1. Aggregate Column Ground Improvement column diameter, number, and spacing shall be designed and installed by the Contractor in accordance with the special provision Aggregate Column Ground Improvement.
2. The depth of the Aggregate Column Ground Improvement varies and shall be determined by the Contractor. It is anticipated that the depth extends to the top of bedrock.
3. The approximate limits of the Aggregate Column Ground Improvement is shown in these plans.
4. Install Aggregate Column Ground Improvement where new fill is taller than 10 feet in height.
5. No Aggregate Column Ground Improvement within 3 feet of new pile foundations or within 5 feet of existing pile foundations.
6. Aggregate Column Ground Improvement shall be spaced to avoid existing utilities.
7. The top of the Aggregate Column Ground Improvement is equal to the lowest excavation limit or existing ground line, whichever is lowest.
8. An organic layer of soil exists near the East Abutment. If the Contractor elects to use either sleeved or grouted aggregate columns or other means to meet the strength criteria, this will not be paid for separately but shall be included in the cost of Aggregate Column Ground Improvement.

BILL OF MATERIAL

Item	Unit	Quantity
Aggregate Column Ground Improvement	L Sum	0.4
Mechanically Stabilized Earth Retaining Wall	Sq Ft	7,314
Structure Excavation	Cu Yd	2,641

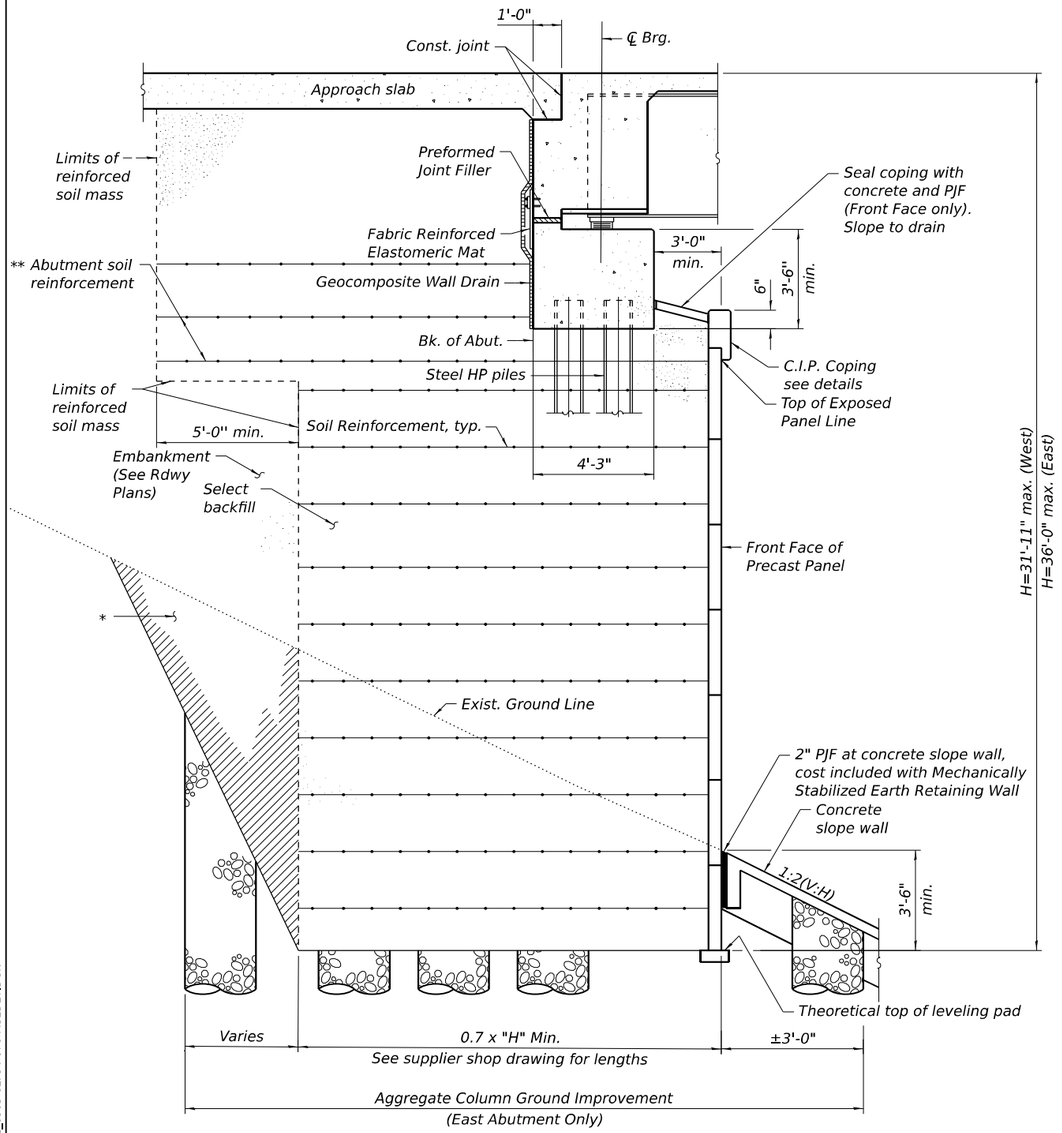

SECTION THRU ABUTMENT

(Horiz. dim. at Rt. ∠'s)

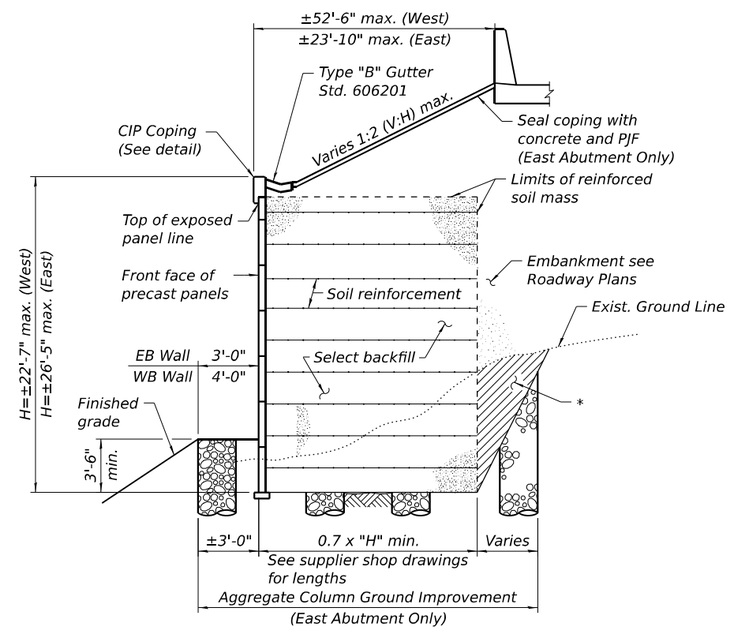

SECTION THRU M.S.E. WALL

(Horiz. dim. at Rt. ∠'s)

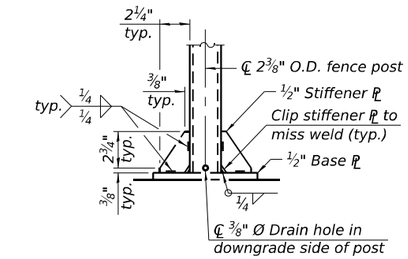

SECTION A-A

(Fence post base plate connection)

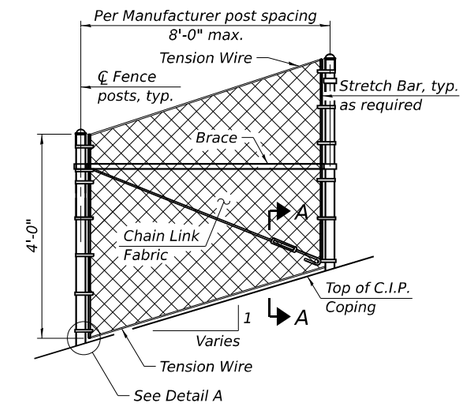

CHAIN LINK FENCE ELEVATION

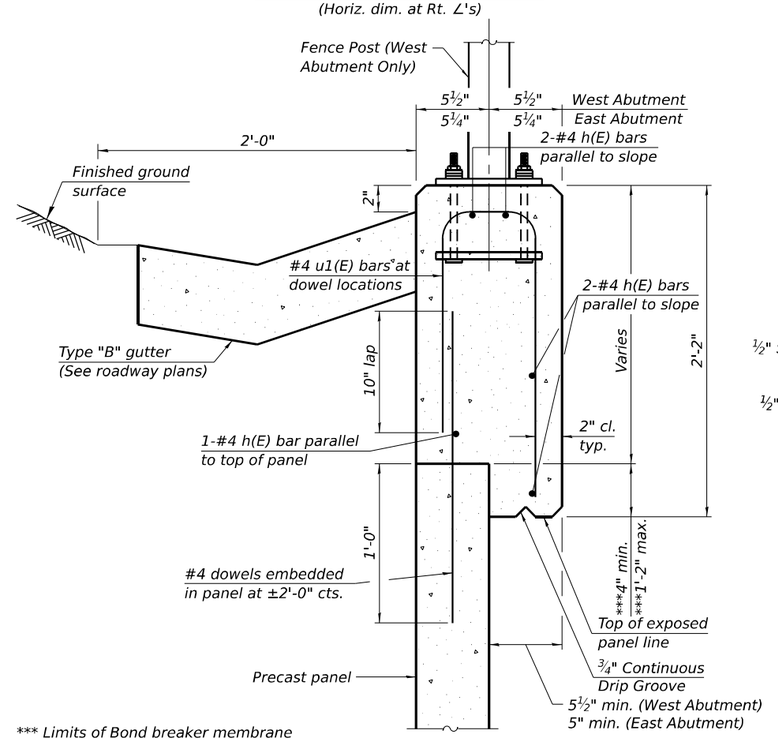

CAST-IN-PLACE COPING DETAIL

(Horiz. dim. at Rt. ∠'s)

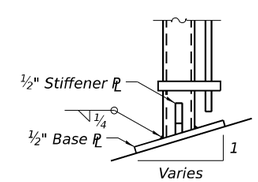

DETAIL A

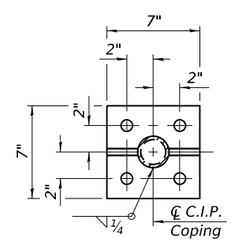

BASE PLATE PLAN

* Overexcavation and backfill beyond structure excavation and excavation for aggregate column ground improvement. This area not measured for payment. Backfill overexcavation with same material used for select fill used in MSE wall.

** The M.S.E. wall supplier shall design the abutment soil reinforcement to resist a horizontal force of 2.5 kips/ft. of abutment.

*** Limits of Bond breaker membrane between front of panel and overhang.

Notes:

1. Stations and offsets are measured from ℄ FAI-80 to the front face of precast panels.
2. Dimensions are measured along the front face of precast panels.
3. When Precast Coping substitution is used, the connection of the coping to the panel shall be designed for the increased loading.

MODEL: SHEET
FILE NAME: C:\TRANSYSTEMS\PW_LOCAL\TRANSYSTEMS-PW-01\DMS20864\09990902_0903-62F94-076-MSEDET.DGN

10-27-2025, 16:50:02

HNTB

USER NAME =	DESIGNED - MVV	REVISED -	
	CHECKED - APC	REVISED -	
PLOT SCALE =	DRAWN - LK	REVISED -	
PLOT DATE =	CHECKED - MVV	REVISED -	

STATE OF ILLINOIS
DEPARTMENT OF TRANSPORTATION

MSE WALL DETAILS
STRUCTURE NOS. 099-0902 (EB) & 099-0903 (WB)

SHEET SA-76 OF SA-112 SHEETS

F.A.I. RTE.	SECTION	COUNTY	TOTAL SHEETS	SHEET NO.
80	2017-057F	WILL	1342	740
		CONTRACT NO. 62F94		
		ILLINOIS	FED. AID PROJECT	

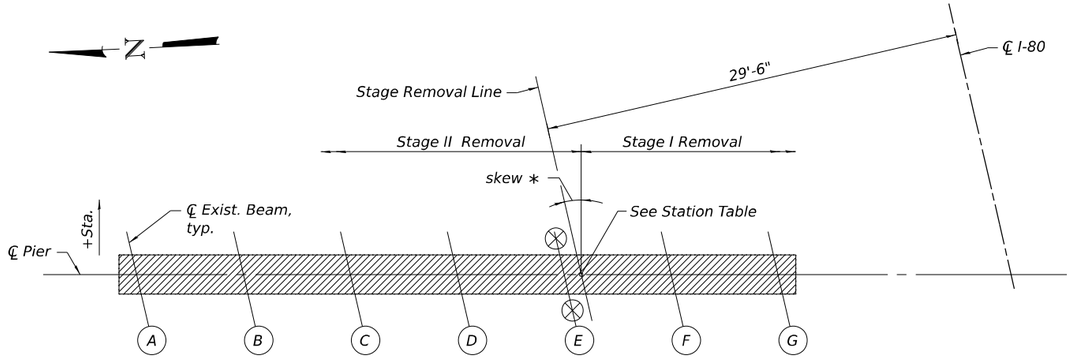

TOP PLAN PIERS 1, 2, 5 & 6

∗ skew = 13°00'00" Exist. piers 1, 2, 3
skew = 9°01'17" Exist. piers 4, 5, 6

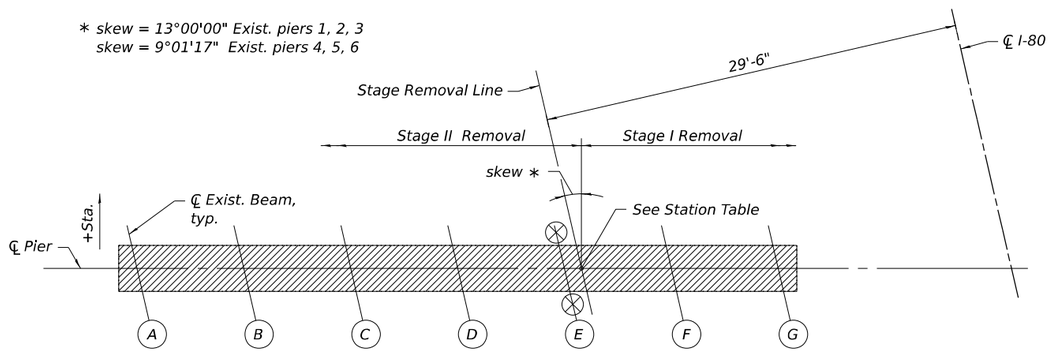

TOP PLAN PIERS 3 & 4

SERVICE REACTIONS FOR TEMPORARY SUPPORT

Reaction	Ex Pier 1 or 2	** Ex. Pier 3		** Ex. Pier 4		Ex. Pier 5 or 6
		West	East	West	East	
Dead Load	138 k	26 k	48 k	48 k	41 k	133 k
Live Load and Impact	65 k	49 k	51 k	51 k	50 k	65 k
Total	203 k	75 k	99 k	99 k	92 k	199 k

** Contractor shall combine East and West values for design of the Temporary Support System.

STATION TABLE

Pier	Station
Ex. Pier 1	711+64.79
Ex. Pier 2	712+60.79
Ex. Pier 3	713+15.88
Ex. Pier 4	713+69.59
Ex. Pier 5	714+37.17
Ex. Pier 6	715+17.67

LEGEND:

Concrete to be Removed

Temporary Support Location

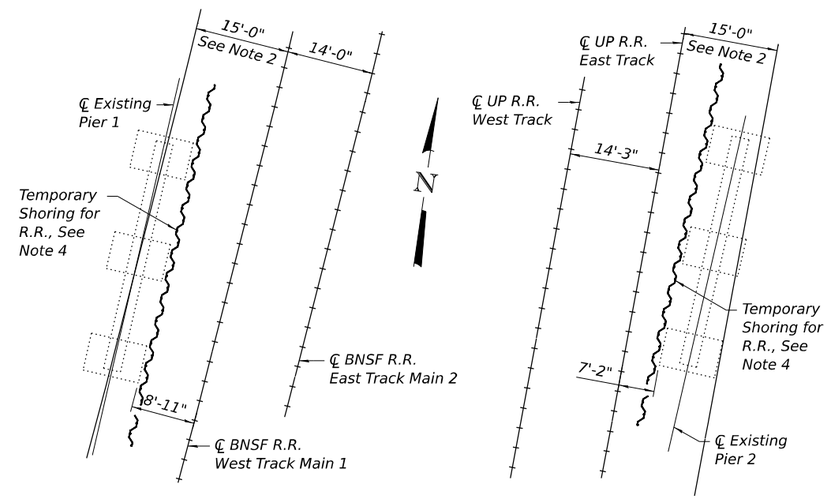

PLAN TEMPORARY SHORING

Temporary Shoring Notes:

1. *Excavation, backfill, and concrete to be removed will not be paid for separately but shall be included in the cost of Removal of Existing Structures No. 1.*
2. *15'-0" is the no excavation zone per BNSF R.R. & UP R.R. "Guidelines for Temporary Shoring". Contractor shall follow these guidelines and coordinate with BNSF R.R. & UP R.R. regarding the design and installation of Temporary Shoring for Railroad prior to starting any removal work.*
3. *For Existing Piers 1 & 2 only, extend removal to 3'-0" below ground line. This will not be paid for separately but shall be included in the cost of Removal of Existing Structures No. 1.*
4. *Contractor shall design and install Temporary Shoring for Railroad per BNSF R.R & UP R.R. "Guidelines for Temporary Shoring". The Temporary Shoring for Railroad may be left in place at the discretion of the railroad at no additional cost to the Department. The Temporary Shoring for Railroad will not be paid for separately but shall be included in the cost of Removal of Existing Structures No. 1.*

Temporary Support System Notes:

5. *Provide Temporary Support System under existing girder E under the pier cap at each pier prior to Stage I removal. See Special Provisions.*

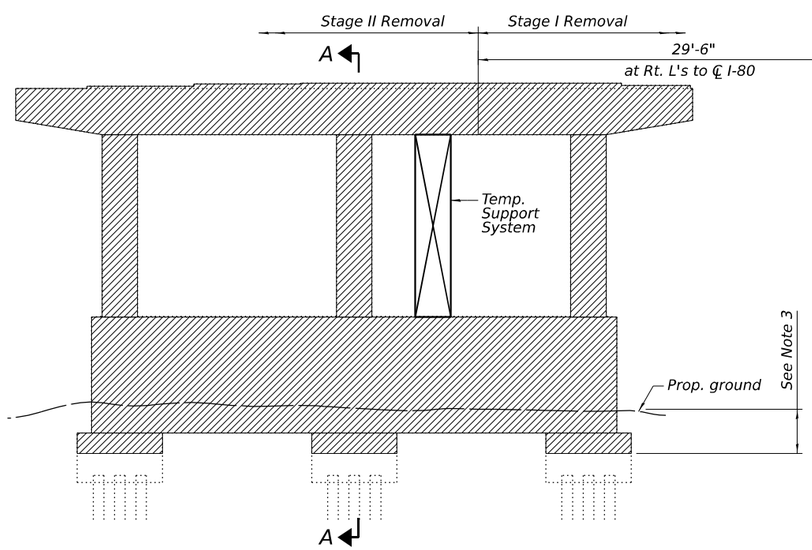

ELEVATION - PIERS 1, 2, 5 & 6

Looking East

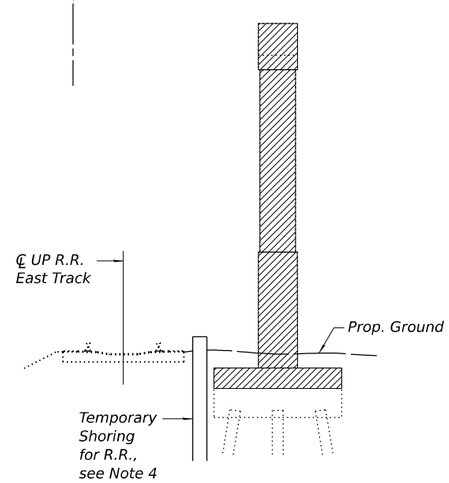

SECTION A-A - EXISTING PIER 2

Existing Pier 1 Similar

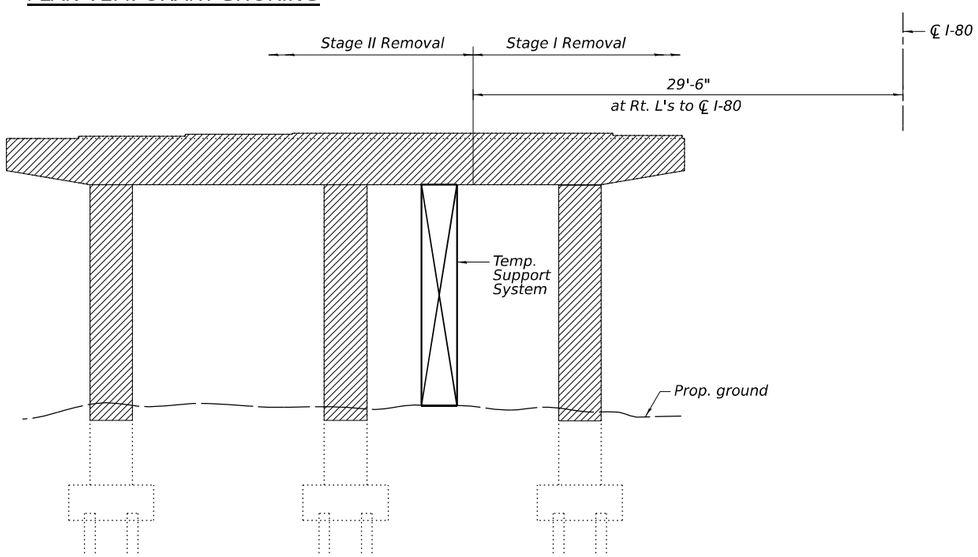

ELEVATION - PIERS 3 & 4

Looking East

MODEL: SHEET
FILE NAME: C:\TRANSYSTEMS\PW_LOCAL\TRANSYSTEMS-PW-01\DMS20864\0990902_0903-62F94-077-PIERREM1.DGN

10-27-2025, 16:50:05

HNTB

USER NAME =	DESIGNED - SH	REVISED -	
	CHECKED - APC	REVISED -	
PLOT SCALE =	DRAWN - LK	REVISED -	
PLOT DATE =	CHECKED - SH	REVISED -	

STATE OF ILLINOIS
DEPARTMENT OF TRANSPORTATION

PIER REMOVAL DETAILS
STRUCTURE NO. 099-0903 (WB)

SHEET SA-77 OF SA-112 SHEETS

F.A.I. RTE.	SECTION	COUNTY	TOTAL SHEETS	SHEET NO.
80	2017-057F	WILL	1342	741
		CONTRACT NO. 62F94		
	ILLINOIS	FED. AID PROJECT		

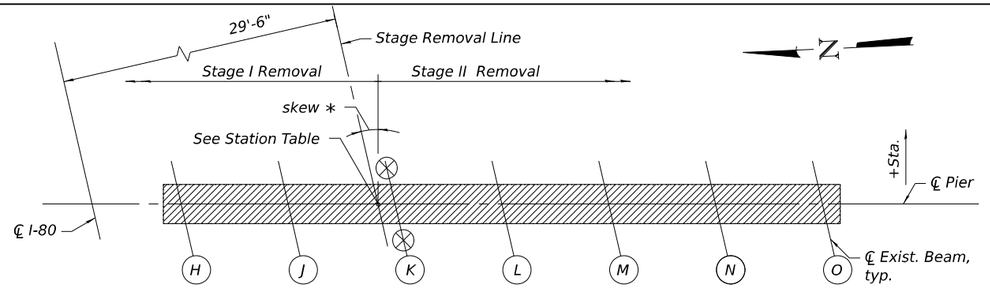

TOP PLAN PIERS 7, 8, 11, & 12

∗ skew = 13°00'00" Exist. piers 7, 8, 9
skew = 9°01'17" Exist. piers 10, 11, 12

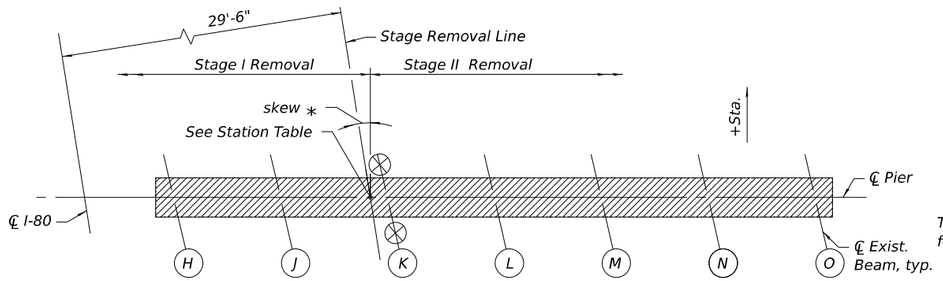

TOP PLAN PIERS 9 & 10

SERVICE REACTIONS FOR TEMPORARY SUPPORT

Reaction	Ex. Pier 7 or 8	** Ex. Pier 9		** Ex. Pier 10		Ex. Pier 11 or 12
		West	East	West	East	
Dead Load	138 k	26 k	48 k	48 k	41 k	133 k
Live Load and Impact	65 k	49 k	51 k	51 k	50 k	65 k
Total	203 k	75 k	99 k	99 k	92 k	199 k

** Contractor shall combine East and West values for design of the Temporary Support System.

STATION TABLE

Pier	Station
Ex. Pier 7	711+51.17
Ex. Pier 8	712+47.17
Ex. Pier 9	713+02.25
Ex. Pier 10	713+60.22
Ex. Pier 11	714+27.80
Ex. Pier 12	715+08.30

LEGEND:

Concrete to be Removed

Temporary Support Location

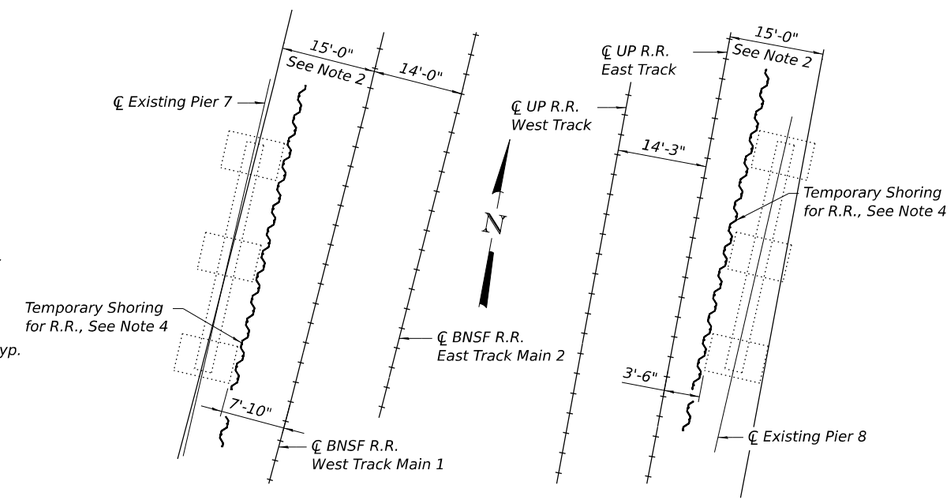

PLAN TEMPORARY SHORING

Temporary Shoring Notes:

1. Excavation, backfill, and concrete to be removed will not be paid for separately but shall be included in the cost of Removal of Existing Structures No. 2.
2. 15'-0" is the no excavation zone per BNSF R.R. & UP R.R. "Guidelines for Temporary Shoring". Contractor shall follow these guidelines and coordinate with BNSF R.R. & UP R.R. regarding the design and installation of Temporary Shoring for Railroad prior to starting any removal work.
3. For Existing Piers 7 & 8 only, extend removal to 3'-0" below ground line. This will not be paid for separately but shall be included in the cost of Removal of Existing Structures No. 2.
4. Contractor shall design and install Temporary Shoring for Railroad per BNSF R.R & UP R.R. "Guidelines for Temporary Shoring". The Temporary Shoring for Railroad may be left in place at the discretion of the railroad at no additional cost to the Department. The Temporary Shoring for Railroad will not be paid for separately but shall be included in the cost of Removal of Existing Structures No. 2.

Temporary Support System Notes:

5. Provide Temporary Support System under existing girder K under the pier cap at each pier prior to Stage I removal. See Special Provisions.

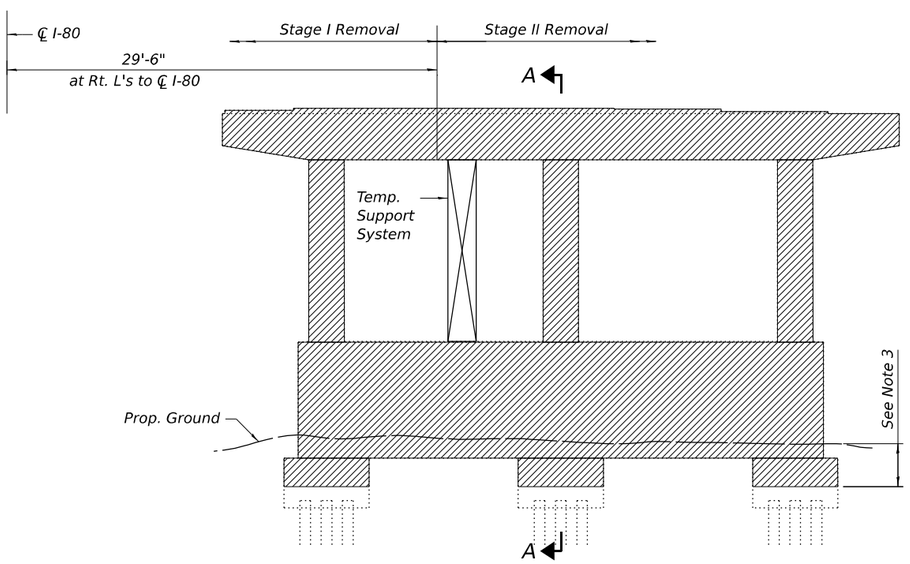

ELEVATION - EXISTING PIERS 7, 8, 11 & 12

Looking East

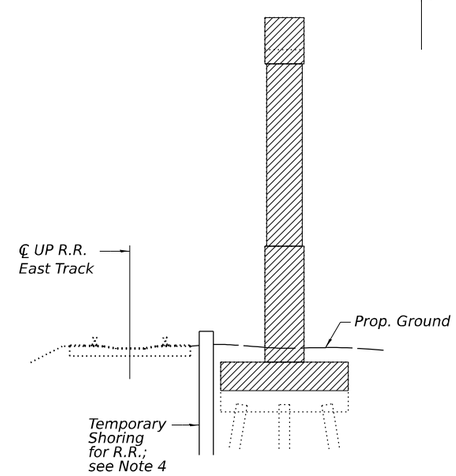

SECTION A-A - EXISTING PIER 8

Existing Pier 7 Similar

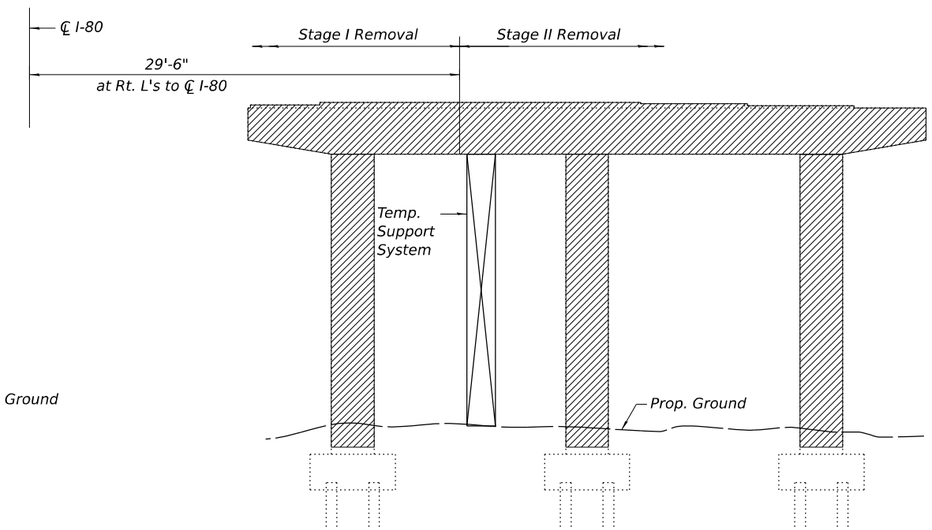

ELEVATION - EXISTING PIERS 9 & 10

Looking East

MODEL: SHEET
FILE NAME: C:\TRANSYSTEMS\PW_LOCAL\TRANSYSTEMS-PW-01\DMS20864\0990902_0903-62F94-078-PIERREM2.DGN
10-27-2025, 16:50:08

HNTB

USER NAME =	DESIGNED - SH	REVISED -	
	CHECKED - APC	REVISED -	
PLOT SCALE =	DRAWN - LK	REVISED -	
PLOT DATE =	CHECKED - SH	REVISED -	

STATE OF ILLINOIS
DEPARTMENT OF TRANSPORTATION

PIER REMOVAL DETAILS
STRUCTURE NO. 099-0902 (EB)

SHEET SA-78 OF SA-112 SHEETS

F.A.I. RTE.	SECTION	COUNTY	TOTAL SHEETS	SHEET NO.
80	2017-057F	WILL	1342	742
		CONTRACT NO. 62F94		
		ILLINOIS	FED. AID PROJECT	

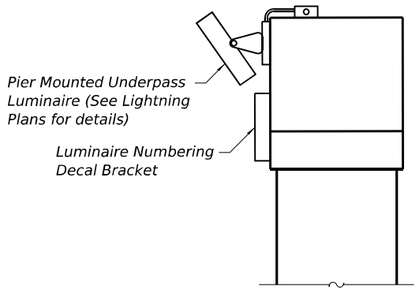

LIGHTING DETAIL

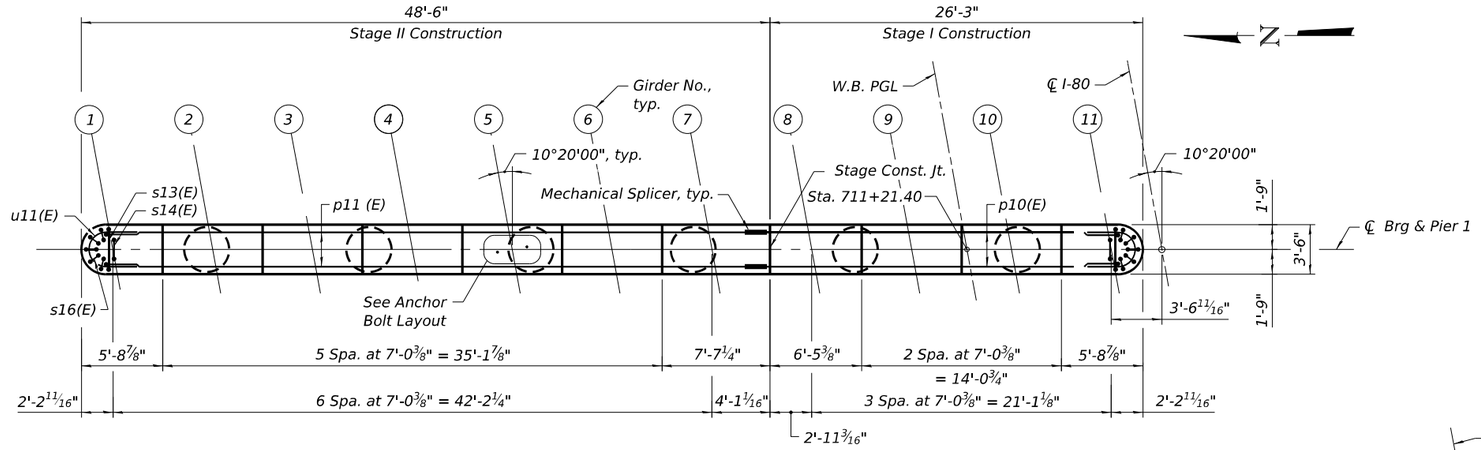

TOP PLAN

BRG. SEAT ELEVATIONS

Girder	Elev.
1	573.08
2	573.45
3	573.59
4	573.71
5	573.82
6	573.92
7	573.83
8	573.71
9	573.56
10	573.42
11	573.28

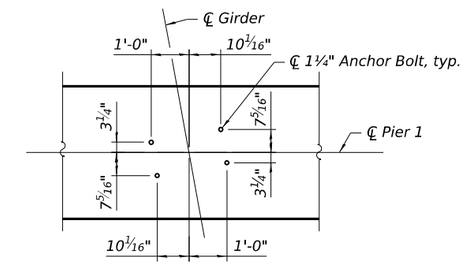

ANCHOR BOLT LAYOUT

1. 4-#6 h12(E) bars E.F. Bend in field as req'd.
2. 4-Bar Splicers for #6 h12(E) bars, E.F.
3. 4-#6 h13(E) bars E.F. Bend in field as req'd.
4. 6-#5 u11(E) bars Each End
A. 8-#6 h11(E) bars at 12" max. cts. E.F.
B. 8-#6 h10(E) bars at 12" max. cts. E.F.
C. 29-#6 s11(E) bars at 6" max. cts. Top of Crashwall

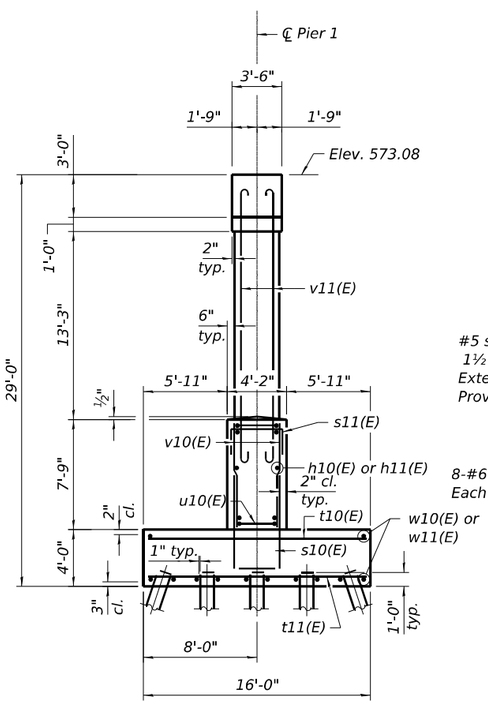

END VIEW

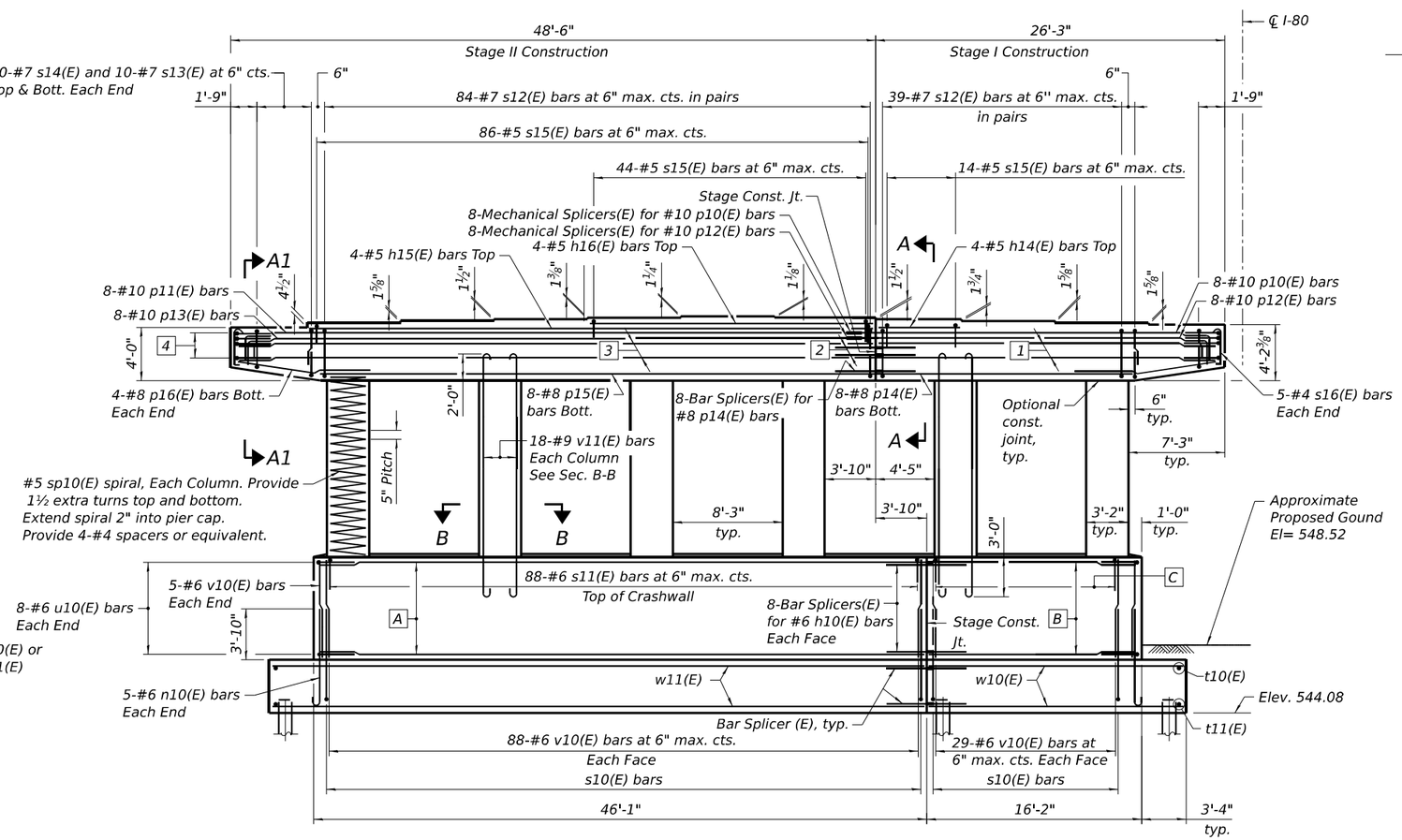

ELEVATION - PIER 1

Looking East

Notes:
1. Space reinforcement in cap to miss anchor bolts.
2. Pour steps monolithically with cap.
3. For details of piles, see Sheet SA-91.
4. For Sections A-A, A1-A1, and B-B, see Sheet SA-80.
5. For Bill of Material and bar bending diagrams, see Sheet SA-80.
6. For Bar Splicer and Mechanical Splicer details, see Sheet SA-92.

MODEL: SHEET
FILE NAME: C:\TRANSYSTEMS\PW_LOCAL\TRANSYSTEMS-PW-01\DM520864\0990902_0903-62F94-079-PIER1WB1.DGN
10-27-2025, 16:50:10

HNTB

USER NAME =	DESIGNED - SH	REVISED -	
	CHECKED - APC	REVISED -	
PLOT SCALE =	DRAWN - LK	REVISED -	
PLOT DATE =	CHECKED - SH	REVISED -	

STATE OF ILLINOIS
DEPARTMENT OF TRANSPORTATION

PIER 1 DETAILS 1 WB
STRUCTURE NO. 099-0903 (WB)
SHEET SA-79 OF SA-112 SHEETS

F.A.I. RTE.	SECTION	COUNTY	TOTAL SHEETS	SHEET NO.
80	2017-057F	WILL	1342	743
		CONTRACT NO. 62F94		
		ILLINOIS	FED. AID PROJECT	

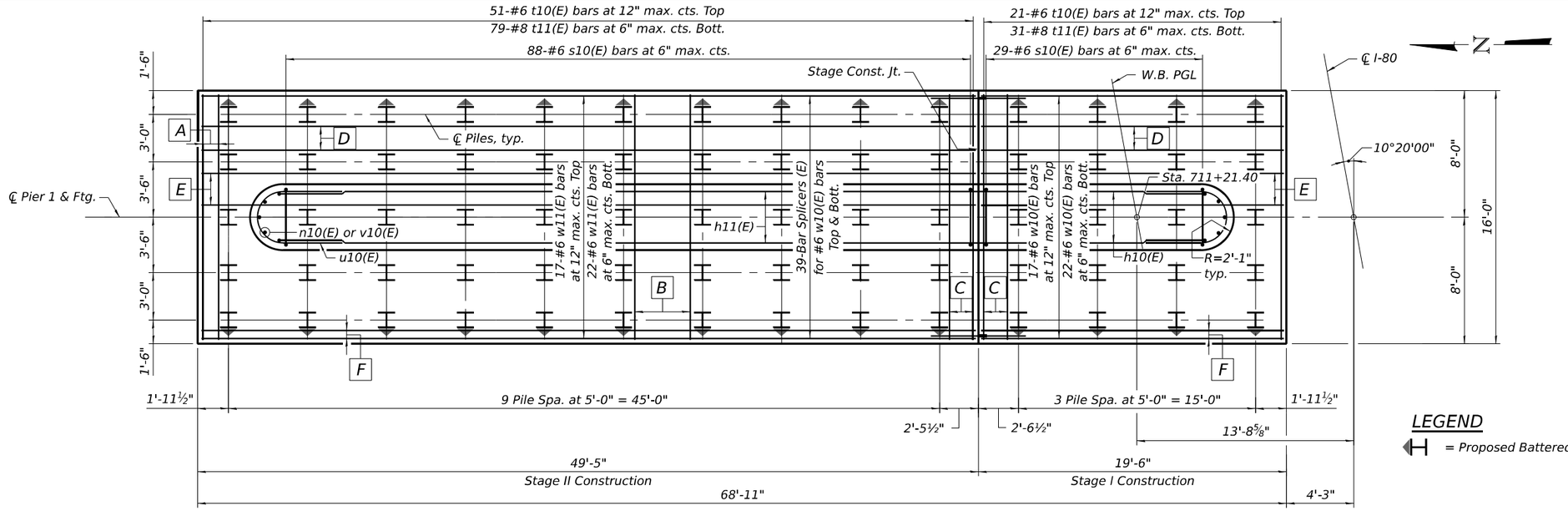

FOOTING PLAN

LEGEND

= Proposed Battered Pile

A	3-#8 t11(E) bars at 6" max. cts. Bott., typ.
B	8-#8 t11(E) bars at 6" max. cts. Bott., typ.
C	4-#8 t11(E) bars at 6" max. cts. Bott.
D	4-#6 w10(E) or w11(E) bars at 6" max. cts. Bott., typ.
E	5-#6 w10(E) or w11(E) bars at 6" max. cts. Bott., typ.
F	2-#6 w10(E) or w11(E) bars at 6" max. cts. Bott., typ.

PIER 1 BILL OF MATERIAL

Bar	No.	Size	Length	Shape
h10(E)	16	#6	13'-11"	
h11(E)	16	#6	43'-10"	
h12(E)	8	#6	24'-4"	
h13(E)	8	#6	46'-7"	
h14(E)	4	#5	6'-1"	
h15(E)	4	#5	42'-5"	
h16(E)	4	#5	21'-4"	
n10(E)	10	#6	7'-9"	
p10(E)	8	#10	27'-4"	
p11(E)	8	#10	47'-7"	
p12(E)	8	#10	26'-10"	
p13(E)	8	#10	47'-1"	
p14(E)	8	#8	19'-4"	
p15(E)	8	#8	41'-7"	
p16(E)	8	#8	9'-2"	
s10(E)	117	#6	17'-2"	
s11(E)	117	#6	8'-4"	
s12(E)	246	#7	13'-3"	
s13(E)	40	#7	9'-0"	
s14(E)	40	#7	7'-1"	
s15(E)	144	#5	7'-2"	
s16(E)	10	#4	3'-5"	
** sp10(E)	6	#5	13'-5"	
t10(E)	72	#6	15'-6"	
t11(E)	110	#8	15'-6"	
u10(E)	16	#6	11'-2"	
u11(E)	12	#5	9'-4"	
v10(E)	244	#6	7'-5"	
v11(E)	108	#9	20'-9"	
w10(E)	39	#6	19'-1"	
w11(E)	39	#6	49'-0"	
Structure Excavation		Cu Yd	1,211	
Concrete Structures		Cu Yd	303.8	
Reinforcement Bars, Epoxy Coated		Pound	45,730	
Furnishing Steel Piles, HP 12x53		Foot	3,726	
Driving Piles		Foot	3,726	
Test Pile Steel HP12x53		Each	1	
Pile Shoes		Each	70	

** Length is height of spiral.

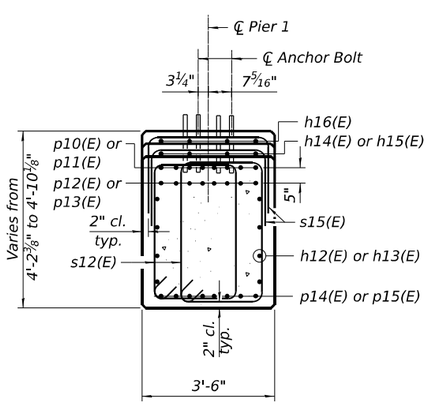

SECTION A-A

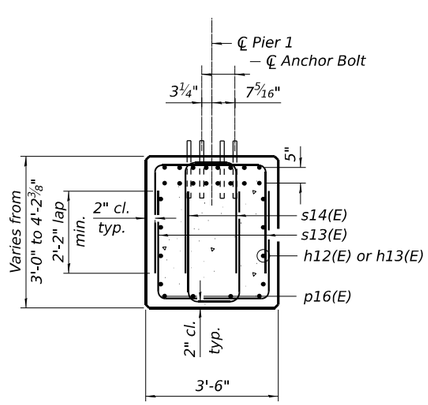

SECTION A1-A1

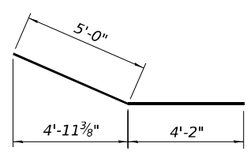

BAR p16(E)

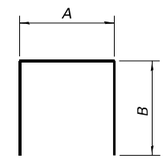

BARS s10(E), s11(E), s13(E) s14(E) & s15(E)

A & B DIMENSIONS

Bar	A	B
s10(E)	3'-10"	6'-8"
s11(E)	3'-10"	2'-3"
s13(E)	3'-2"	2'-11"
s14(E)	1'-3"	2'-11"
s15(E)	3'-2"	2'-0"

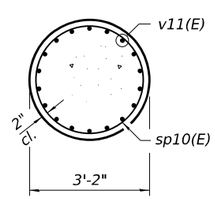

SECTION B-B

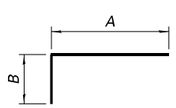

BARS p10(E), p11(E), p12(E) & p13(E)

A & B DIMENSIONS

Bar	A	B
p10(E)	25'-6"	1'-10"
p11(E)	45'-9"	1'-10"
p12(E)	25'-0"	1'-10"
p13(E)	45'-3"	1'-10"

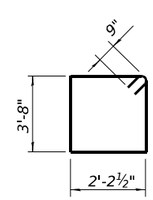

BAR s12(E)

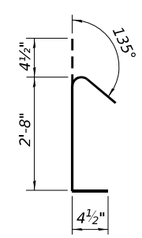

BAR s16(E)

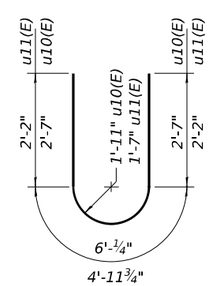

BARS u10(E) & u11(E)

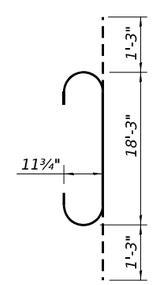

BAR v11(E)

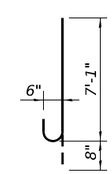

BAR n10(E)

PILE DATA

Type: HP 12x53 with pile shoes
Nominal Required Bearing: 418 kips
Factored Resistance Available: 230 kips
Est. Length: 54 ft
No. Production Piles: 69
No. Test Piles: 1

Notes:
1. For section locations, see Sheet SA-79.
2. Space reinforcement in pile cap to miss piles.
3. Piles shown as battered should be battered at 3H:12V.
4. For Bar Splicer details, see Sheet SA-92.
5. Contractor to verify all the conflict locations between the proposed and existing piles.

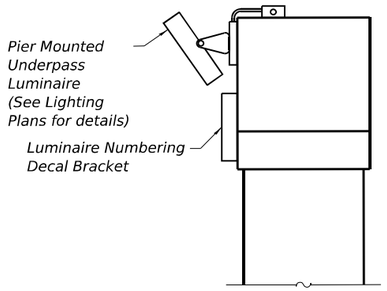

LIGHTING DETAIL

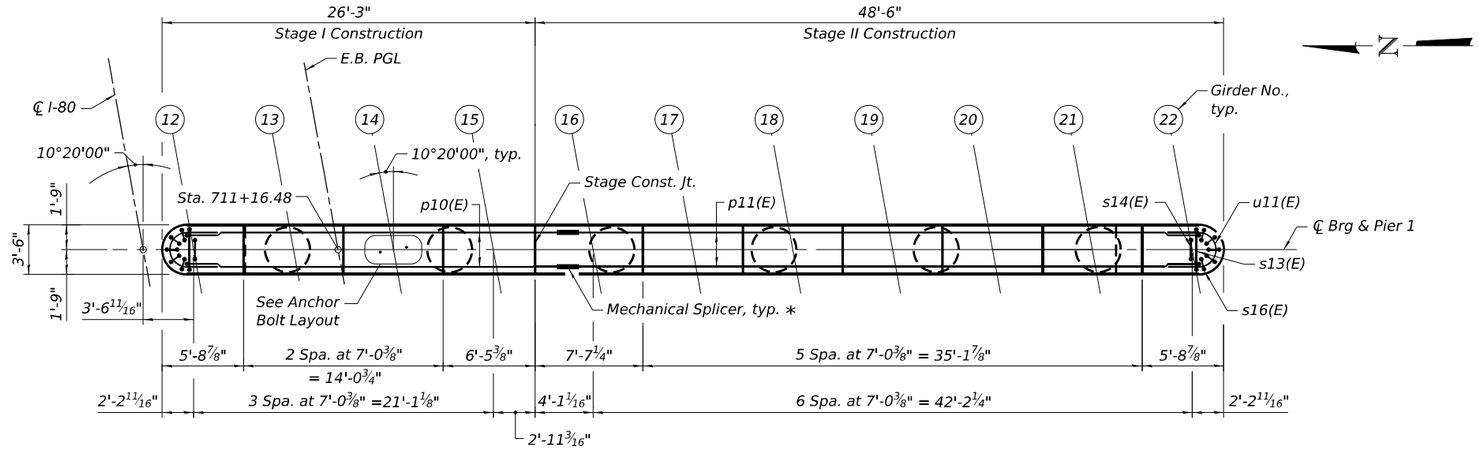

TOP PLAN

BRG. SEAT ELEVATIONS

Girder	Elev.
12	573.27
13	573.40
14	573.53
15	573.66
16	573.77
17	573.85
18	573.74
19	573.61
20	573.47
21	573.32
22	573.17

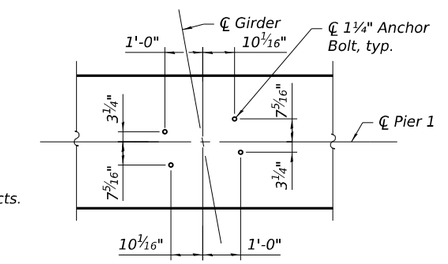

ANCHOR BOLT LAYOUT

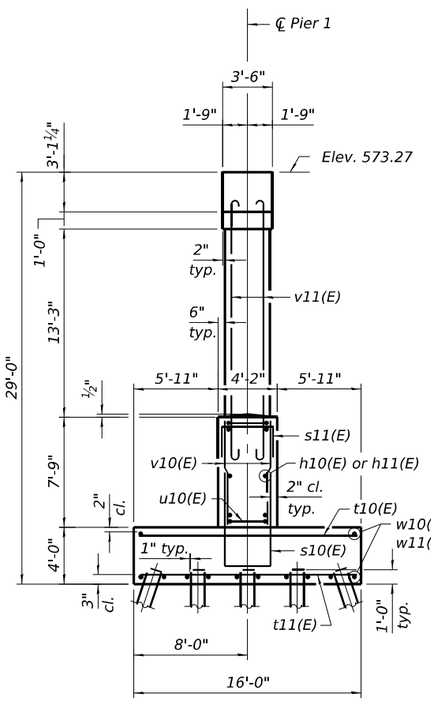

END VIEW

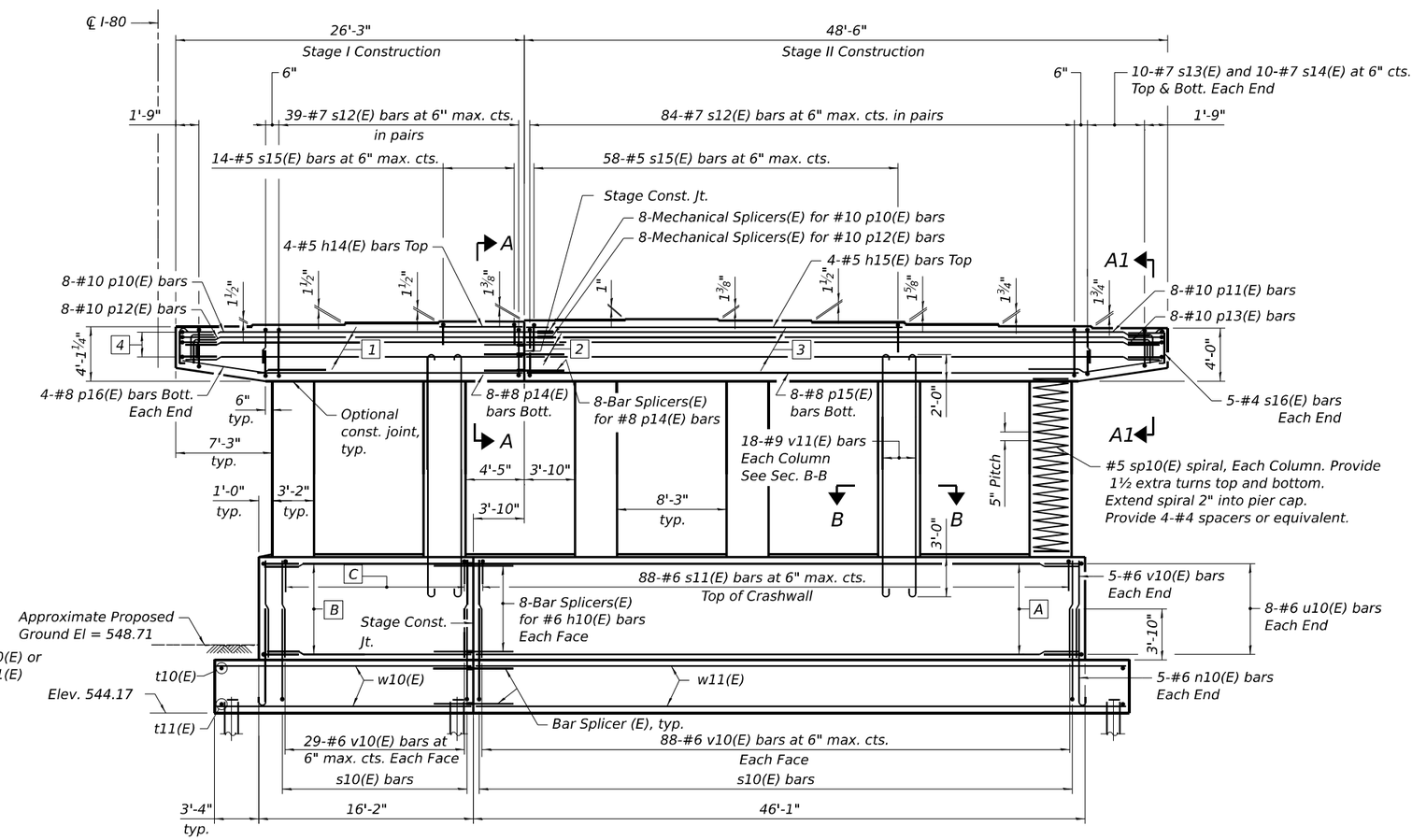

ELEVATION - PIER 1

Looking East

1. 4-#6 h12(E) bars E.F. Bend in field as req'd.
2. 4-Bar Splicers for #6 h12(E) bars, E.F.
3. 4-#6 h13(E) bars E.F. Bend in field as req'd.
4. 6-#5 u11(E) bars Each End

A. 8-#6 h11(E) bars at 12" max. cts. E.F.

B. 8-#6 h10(E) bars at 12" max. cts. E.F.

C. 29-#6 s11(E) bars at 6" max. cts. Top of Crashwall

Notes:

1. Space reinforcement in cap to miss anchor bolts.
2. Pour steps monolithically with cap.
3. For details of piles, see Sheet SA-91.
4. For Sections A-A, A1-A1, and B-B, see Sheet SA-82.
5. For Bill of Material and bar bending diagrams, see Sheet SA-82.
6. For Bar Splicer and Mechanical Splicer details, see Sheet SA-92.

* The longitudinal bars in the pier cap are detailed with a 1 foot extension length beyond the stage construction joint to accommodate the mechanical couplers. Contractor shall adjust the extension length based on the selected mechanical splicer assembly.

MODEL: SHEET
FILE NAME: C:\TRANSYSTEMS\PW_LOCAL\TRANSYSTEMS-PW-01\DMS20864\0990902_0903-62F94-081-PIER1EB1.DGN
10-27-2025, 16:50:18

HNTB

USER NAME =	DESIGNED - SH	REVISED -	
	CHECKED - APC	REVISED -	
PLOT SCALE =	DRAWN - LK	REVISED -	
PLOT DATE =	CHECKED - SH	REVISED -	

STATE OF ILLINOIS
DEPARTMENT OF TRANSPORTATION

PIER 1 DETAILS 1 EB
STRUCTURE NO. 099-0902 (EB)

SHEET SA-81 OF SA-112 SHEETS

F.A.I. RTE.	SECTION	COUNTY	TOTAL SHEETS	SHEET NO.
80	2017-057F	WILL	1342	745
		CONTRACT NO. 62F94		
		ILLINOIS	FED. AID PROJECT	

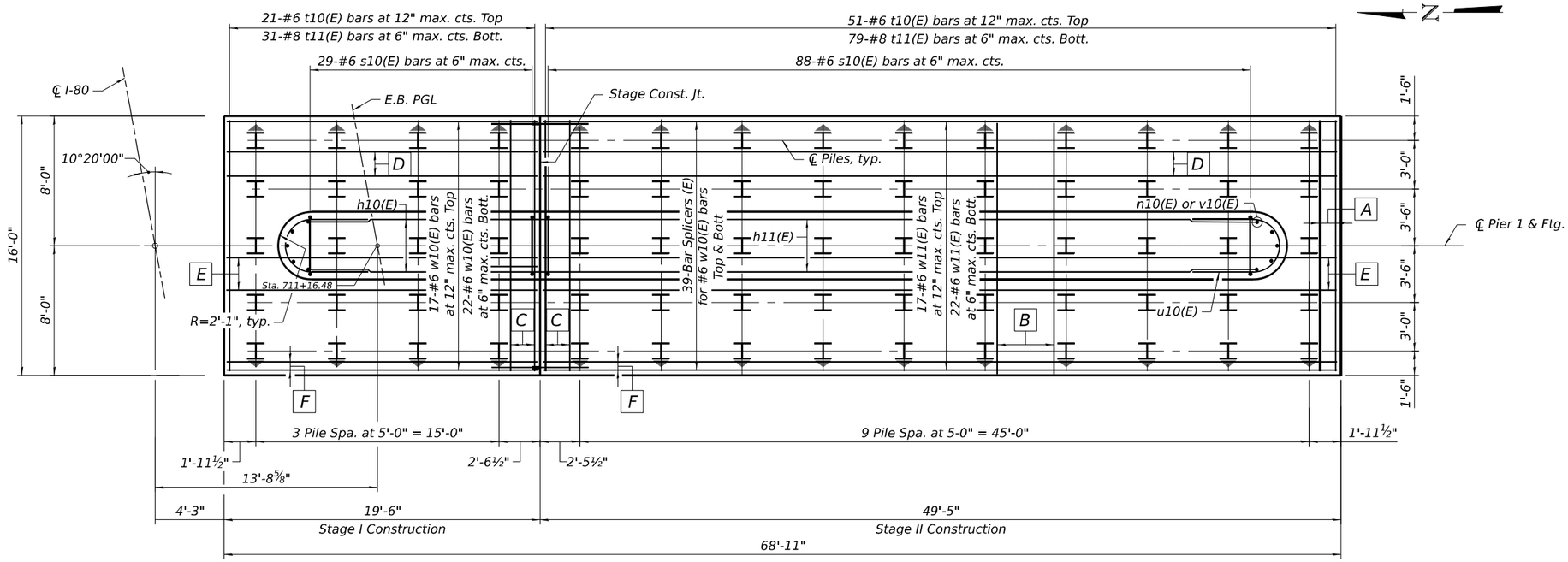

FOOTING PLAN

A	3-#8 t11(E) bars at 6" max. cts. Bott., typ.
B	8-#8 t11(E) bars at 6" max. cts. Bott., typ.
C	4-#8 t11(E) bars at 6" max. cts. Bott.
D	4-#6 w10(E) or w11(E) bars at 6" max. cts. Bott., typ.
E	5-#6 w10(E) or w11(E) bars at 6" max. cts. Bott., typ.
F	2-#6 w10(E) or w11(E) bars at 6" max. cts. Bott., typ.

PIER 1
BILL OF MATERIAL

Bar	No.	Size	Length	Shape
h10(E)	16	#6	13'-11"	
h11(E)	16	#6	43'-10"	
h12(E)	8	#6	24'-4"	
h13(E)	8	#6	46'-7"	
h14(E)	4	#5	6'-1"	
h15(E)	4	#5	28'-4"	
n10(E)	10	#6	7'-9"	
p10(E)	8	#10	27'-4"	
p11(E)	8	#10	47'-7"	
p12(E)	8	#10	26'-10"	
p13(E)	8	#10	47'-1"	
p14(E)	8	#8	19'-4"	
p15(E)	8	#8	41'-7"	
p16(E)	8	#8	9'-2"	
s10(E)	117	#6	17'-2"	
s11(E)	117	#6	8'-4"	
s12(E)	246	#7	13'-3"	
s13(E)	40	#7	9'-0"	
s14(E)	40	#7	7'-1"	
s15(E)	72	#5	7'-2"	
s16(E)	10	#4	3'-5"	
** sp10(E)	6	#5	13'-5"	
t10(E)	72	#6	15'-6"	
t11(E)	110	#8	15'-6"	
u10(E)	16	#6	11'-2"	
u11(E)	12	#5	9'-4"	
v10(E)	244	#6	7'-5"	
v11(E)	108	#9	20'-9"	
w10(E)	39	#6	19'-1"	
w11(E)	39	#6	49'-0"	
Structure Excavation			Cu. Yd.	1,126
Concrete Structures			Cu. Yd.	303.8
Reinforcement Bars, Epoxy Coated			Pound	45,050
Furnishing Steel Piles, HP 12x53			Foot	2,346
Driving Piles			Foot	2,346
Test Pile Steel HP12x53			Each	1
Pile Shoes			Each	70

** Length is height of spiral.

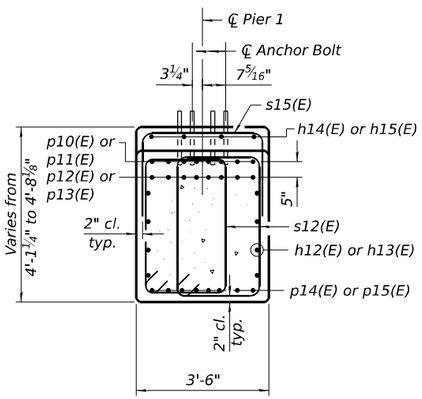

SECTION A-A

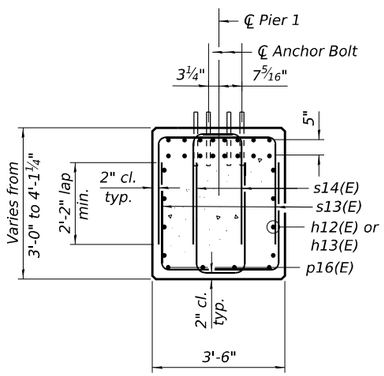

SECTION A1-A1

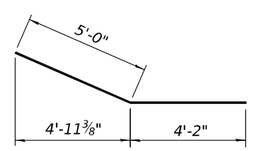

BAR p16(E)

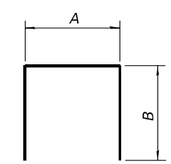

BARS s10(E), s11(E), s13(E) s14(E) & s15(E)

A & B DIMENSIONS

Bar	A	B
s10(E)	3'-10"	6'-8"
s11(E)	3'-10"	1'-7"
s13(E)	3'-2"	2'-11"
s14(E)	1'-3⅛"	2'-11"
s15(E)	3'-2"	1'-4"

LEGEND

= Proposed Battered Pile

PILE DATA

Type: HP 12x53 with pile shoes
Nominal Required Bearing: 418 kips
Factored Resistance Available: 230 kips
Est. Length: 34 ft
No. Production Piles: 69
No. Test Piles: 1

Notes:
1. For section locations, see Sheet SA-81.
2. Space reinforcement in pile cap to miss piles.
3. Piles shown as battered should be battered at 3H:12V.
4. For Bar Splicer details, see Sheet SA-93.

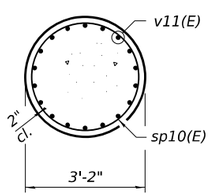

SECTION B-B

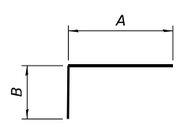

BARS p10(E), p11(E), p12(e), & p13(E)

A & B DIMENSIONS

Bar	A	B
p10(E)	25'-6"	1'-10"
p11(E)	45'-9"	1'-10"
p12(E)	25'-0"	1'-10"
p13(E)	45'-3"	1'-10"

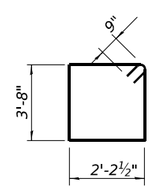

BAR s12(E)

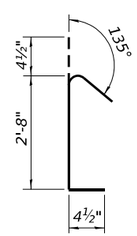

BAR s16(E)

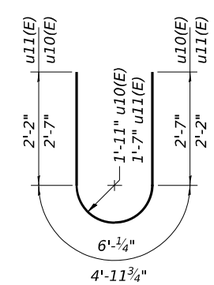

BARS u10(E) & u11(E)

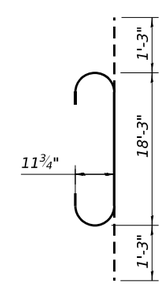

BAR v11(E)

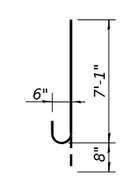

BAR n10(E)

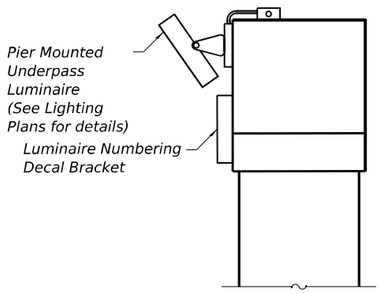

LIGHTING ATTACHMENT

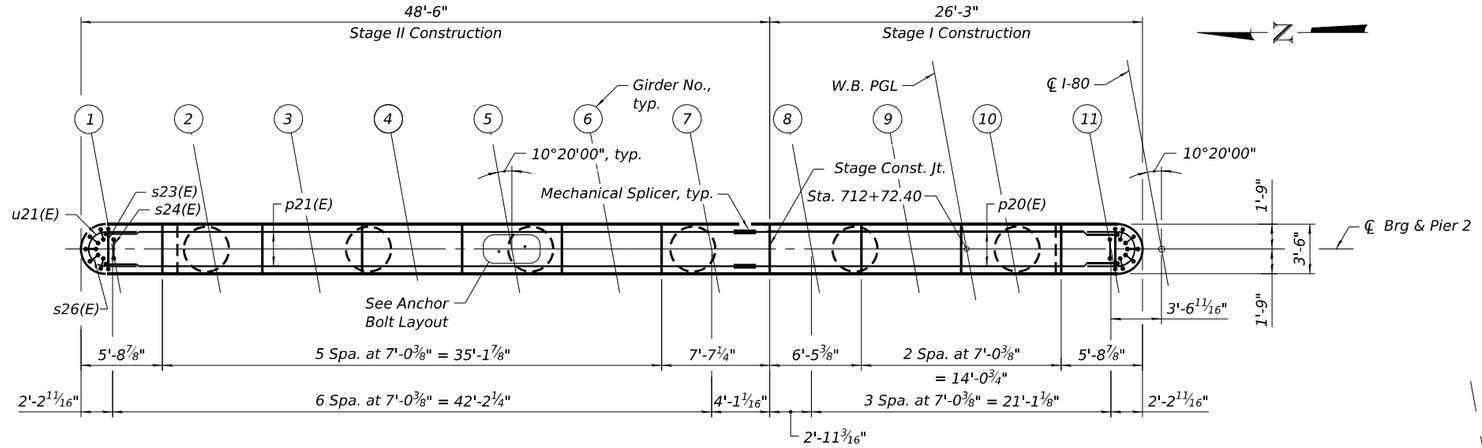

TOP PLAN

BRG. SEAT ELEVATIONS

Girder	Elev.
1	573.71
2	574.10
3	574.24
4	574.42
5	574.54
6	574.65
7	574.56
8	574.46
9	574.32
10	574.19
11	574.06

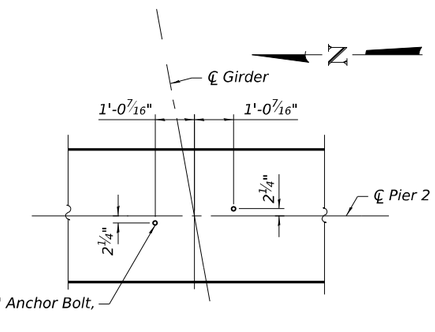

ANCHOR BOLT LAYOUT

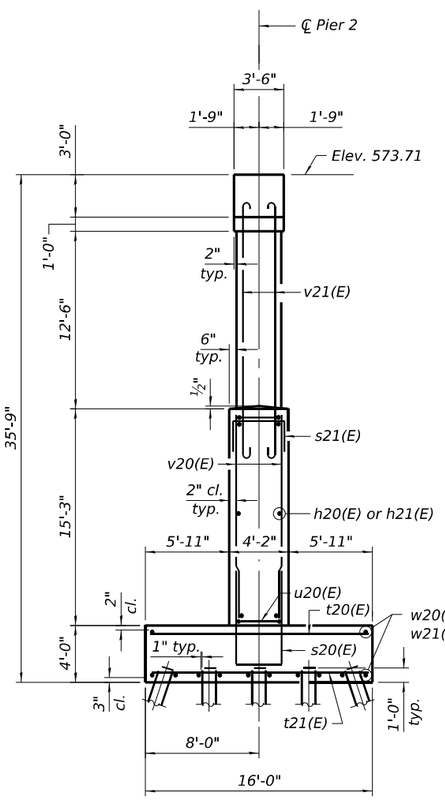

END VIEW

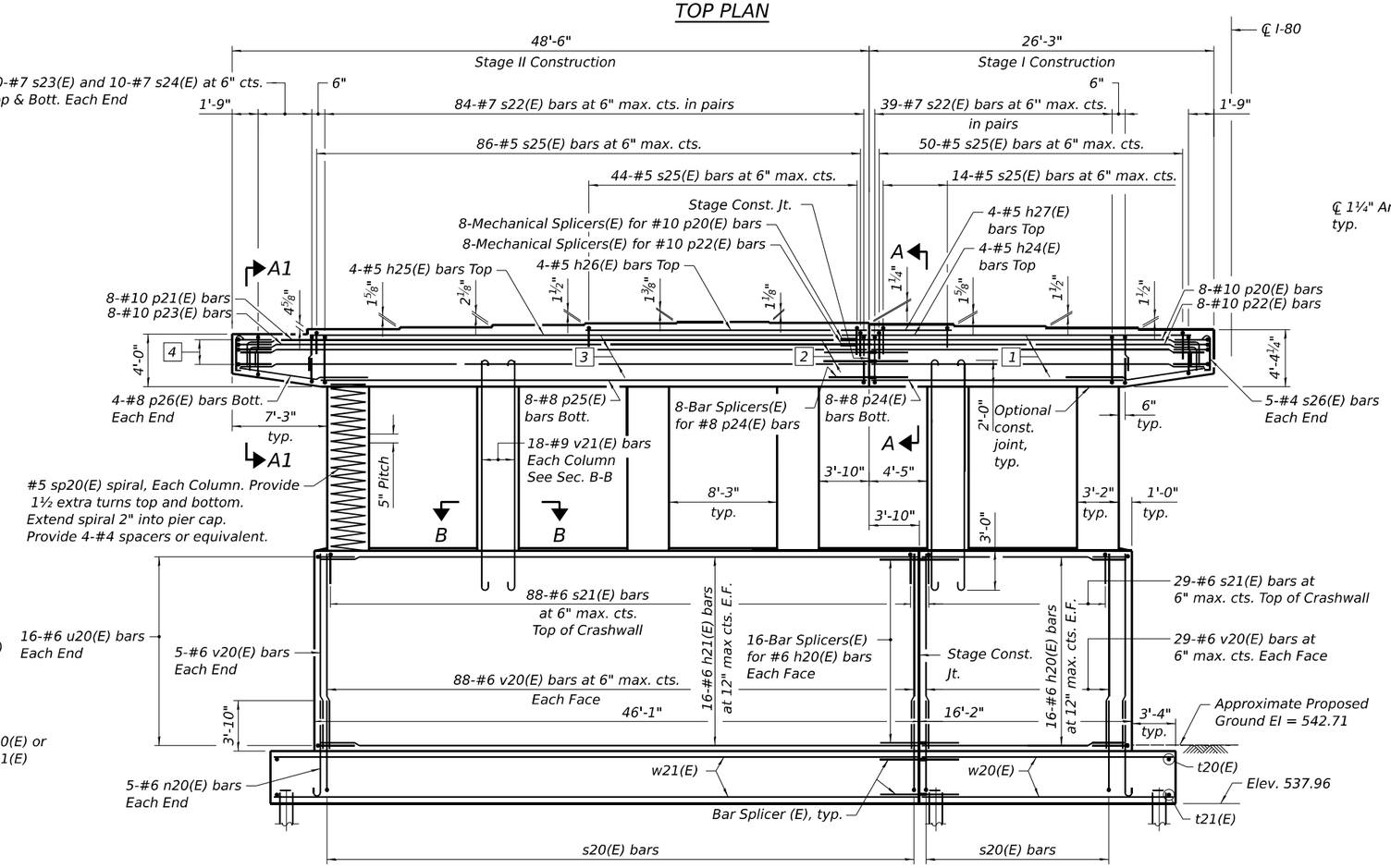

ELEVATION - PIER 2

Looking East

1. 4-#6 h22(E) bars E.F. Bend in field as req'd.
2. 4-Bar Splicers for #6 h22(E) bars, E.F.
3. 4-#6 h23(E) bars E.F. Bend in field as req'd.
4. 6-#5 u21(E) bars Each End

Notes:

1. Space reinforcement in cap to miss anchor bolts.
2. Pour steps monolithically with cap.
3. For details of piles, see Sheet SA-91.
4. For Sections A-A, A1-A1, and B-B, see Sheet SA-84.
5. For Bill of Material and bar bending diagrams, see Sheet SA-84.
6. For Bar Splicer and Mechanical Splicer details, see Sheet SA-92.

MODEL: SHEET
FILE NAME: C:\TRANSYSTEMS\PW_LOCAL\TRANSYSTEMS-PW-01\DM520864\0990902_0903-62F94-083-PIER2WB1.DGN
10-27-2025, 16:50:23

HNTB

USER NAME =	DESIGNED - SH	REVISED -	
	CHECKED - APC	REVISED -	
PLOT SCALE =	DRAWN - LK	REVISED -	
PLOT DATE =	CHECKED - SH	REVISED -	

STATE OF ILLINOIS
DEPARTMENT OF TRANSPORTATION

PIER 2 DETAILS 1 WB
STRUCTURE NO. 099-0903 (WB)
SHEET SA-83 OF SA-112 SHEETS

F.A.I. RTE.	SECTION	COUNTY	TOTAL SHEETS	SHEET NO.
80	2017-057F	WILL	1342	747
		CONTRACT NO. 62F94		
		ILLINOIS	FED. AID PROJECT	

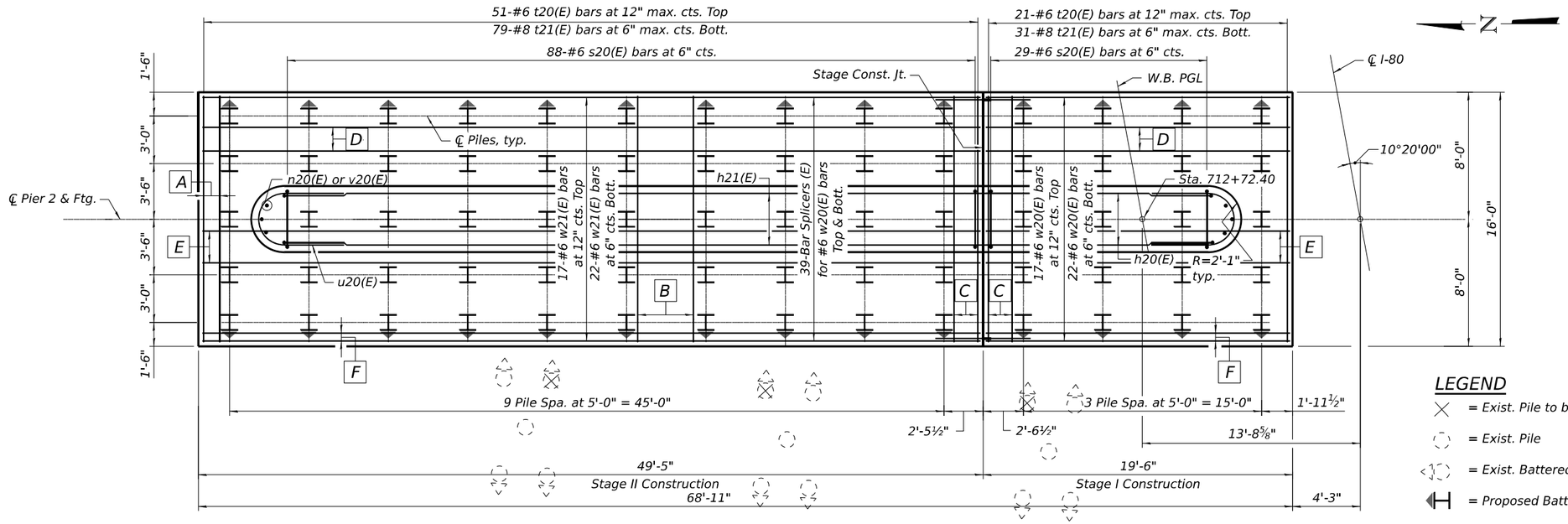

FOOTING PLAN

LEGEND

- = Exist. Pile to be Removed
- = Exist. Pile
- = Exist. Battered Pile
- = Proposed Battered Pile

A — 3-#8 t21(E) bars at 6" max. cts. Bott., typ.

B — 8-#8 t21(E) bars at 6" max. cts. Bott., typ.

C — 4-#8 t21(E) bars at 6" max. cts. Bott.

D — 4-#6 w20(E) or w21(E) bars at 6" max. cts. Bott., typ.

E — 5-#6 w20(E) or w21(E) bars at 6" max. cts. Bott., typ.

F — 2-#6 w20(E) or w21(E) bars at 6" max. cts. Bott., typ.

PIER 2 BILL OF MATERIAL

Bar	No.	Size	Length	Shape
h20(E)	32	#6	13'-11"	
h21(E)	32	#6	43'-10"	
h22(E)	8	#6	24'-4"	
h23(E)	8	#6	46'-7"	
h24(E)	4	#5	24'-2"	
h25(E)	4	#5	42'-5"	
h26(E)	4	#5	21'-4"	
h27(E)	4	#5	6'-1"	
n20(E)	10	#6	7'-9"	
p20(E)	8	#10	27'-4"	
p21(E)	8	#10	47'-7"	
p22(E)	8	#10	26'-10"	
p23(E)	8	#10	47'-1"	
p24(E)	8	#8	19'-4"	
p25(E)	8	#8	41'-7"	
p26(E)	8	#8	9'-2"	
s20(E)	117	#6	17'-2"	
s21(E)	117	#6	8'-4"	
s22(E)	246	#7	13'-7"	
s23(E)	40	#7	9'-0"	
s24(E)	40	#7	7'-5"	
s25(E)	194	#5	7'-2"	
s26(E)	10	#4	3'-5"	
sp20(E)	6	#5	12'-8"	**
t20(E)	72	#6	15'-6"	
t21(E)	110	#8	15'-6"	
u20(E)	32	#6	11'-2"	
u21(E)	12	#5	9'-4"	
v20(E)	244	#6	14'-11"	
v21(E)	108	#9	20'-0"	
w20(E)	39	#6	19'-1"	
w21(E)	39	#6	49'-0"	

Structure Excavation	Cu Yd	343
Concrete Structures	Cu Yd	375.4
Reinforcement Bars, Epoxy Coated	Pound	50,450
Furnishing Steel Piles, HP 12x53	Foot	1,794
Driving Piles	Foot	1,794
Test Pile Steel HP12x53	Each	1
Pile Shoes	Each	70
Pile Removal	Each	3

** Length is height of spiral.

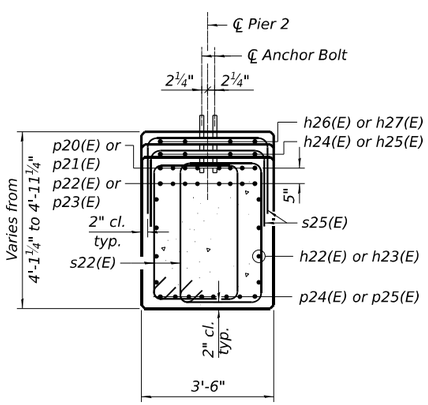

SECTION A-A

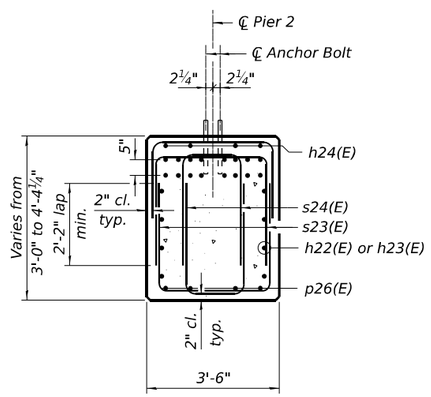

SECTION A1-A1

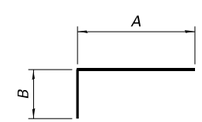

BARS p20(E), p21(E), p22(E) & p23(E)

A & B DIMENSIONS

Bar	A	B
p20(E)	25'-6"	1'-10"
p21(E)	45'-9"	1'-10"
p22(E)	25'-0"	1'-10"
p23(E)	45'-3"	1'-10"

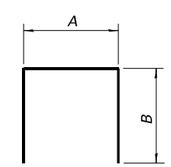

BARS s20(E), s21(E), s23(E) s24(E) & s25(E)

A & B DIMENSIONS

Bar	A	B
s20(E)	3'-10"	6'-8"
s21(E)	3'-10"	2'-3"
s23(E)	3'-2"	2'-11"
s24(E)	1'-7⅜"	2'-11"
s25(E)	3'-2"	2'-0"

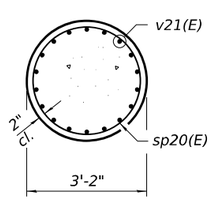

SECTION B-B

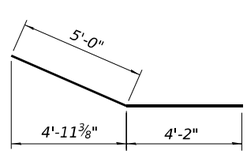

BAR p26(E)

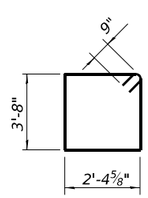

BAR s22(E)

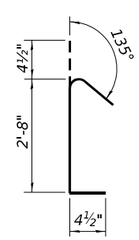

BAR s26(E)

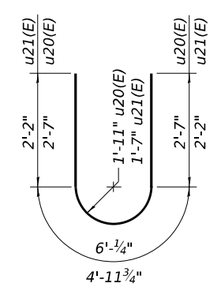

BARS u20(E) & u21(E)

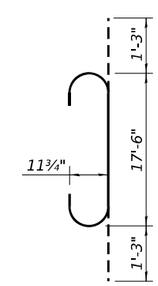

BAR v21(E)

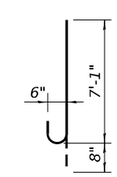

BAR n20(E)

PILE DATA

Type: HP 12x53 with pile shoes
Nominal Required Bearing: 418 kips
Factored Resistance Available: 230 kips
Est. Length: 26 ft
No. Production Piles: 69
No. Test Piles: 1

Notes:
1. For section locations, see Sheet SA-83.
2. Space reinforcement in pile cap to miss piles.
3. Piles shown as battered should be battered at 3H:12V.
4. For Bar Splicer details, see Sheet SA-92.
5. Contractor to verify all conflict locations between the existing and proposed piles.

MODEL: SHEET
FILE NAME: C:\TRANSYSTEMS\PW_LOCAL\TRANSYSTEMS-PW-01\DMS20864\0990902_0903-62F94-084-PIER2WB2.DGN
10-27-2025, 16:50:26

HNTB

USER NAME =	DESIGNED - SH	REVISED -	
	CHECKED - APC	REVISED -	
PLOT SCALE =	DRAWN - LK	REVISED -	
PLOT DATE =	CHECKED - SH	REVISED -	

STATE OF ILLINOIS
DEPARTMENT OF TRANSPORTATION

PIER 2 DETAILS 2 WB
STRUCTURE NO. 099-0903 (WB)
SHEET SA-84 OF SA-112 SHEETS

F.A.I. RTE.	SECTION	COUNTY	TOTAL SHEETS	SHEET NO.
80	2017-057F	WILL	1342	748
		CONTRACT NO. 62F94		
		ILLINOIS	FED. AID PROJECT	

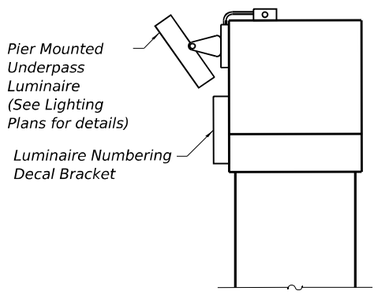

LIGHTING ATTACHMENT

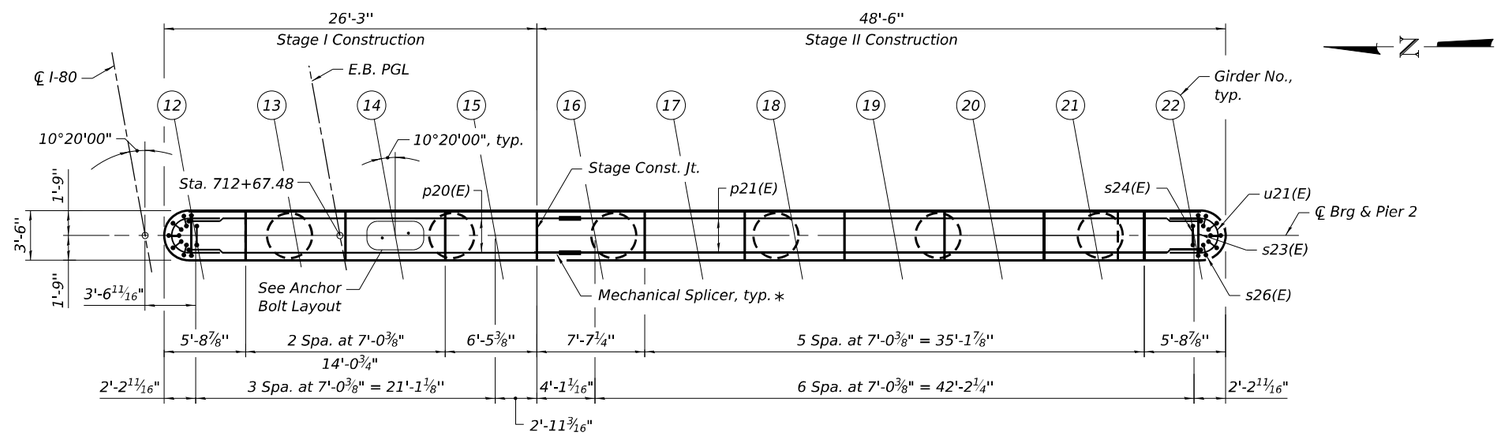

TOP PLAN

BRG. SEAT ELEVATIONS

Girder	Elev.
12	574.06
13	574.20
14	574.34
15	574.48
16	574.59
17	574.68
18	574.58
19	574.47
20	574.33
21	574.20
22	574.06

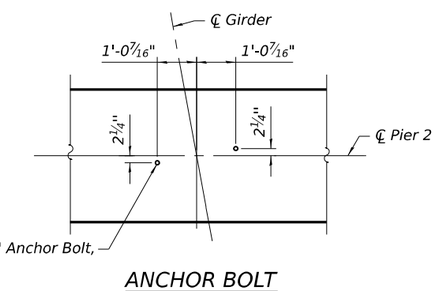

ANCHOR BOLT LAYOUT

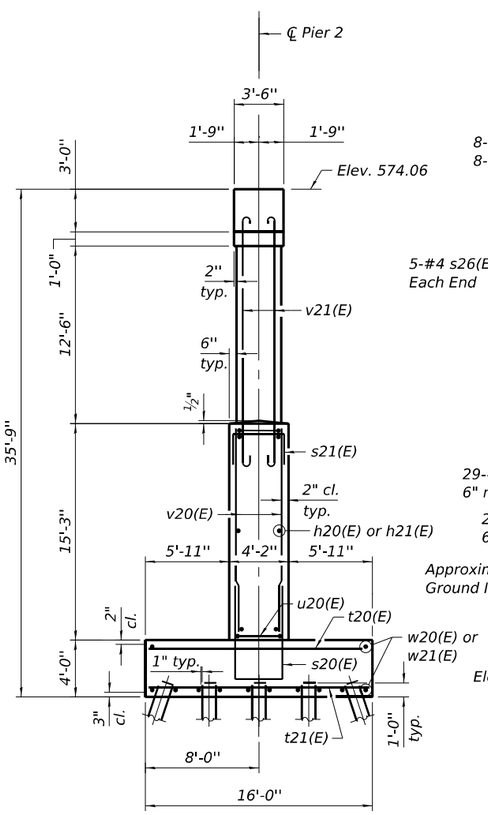

END VIEW

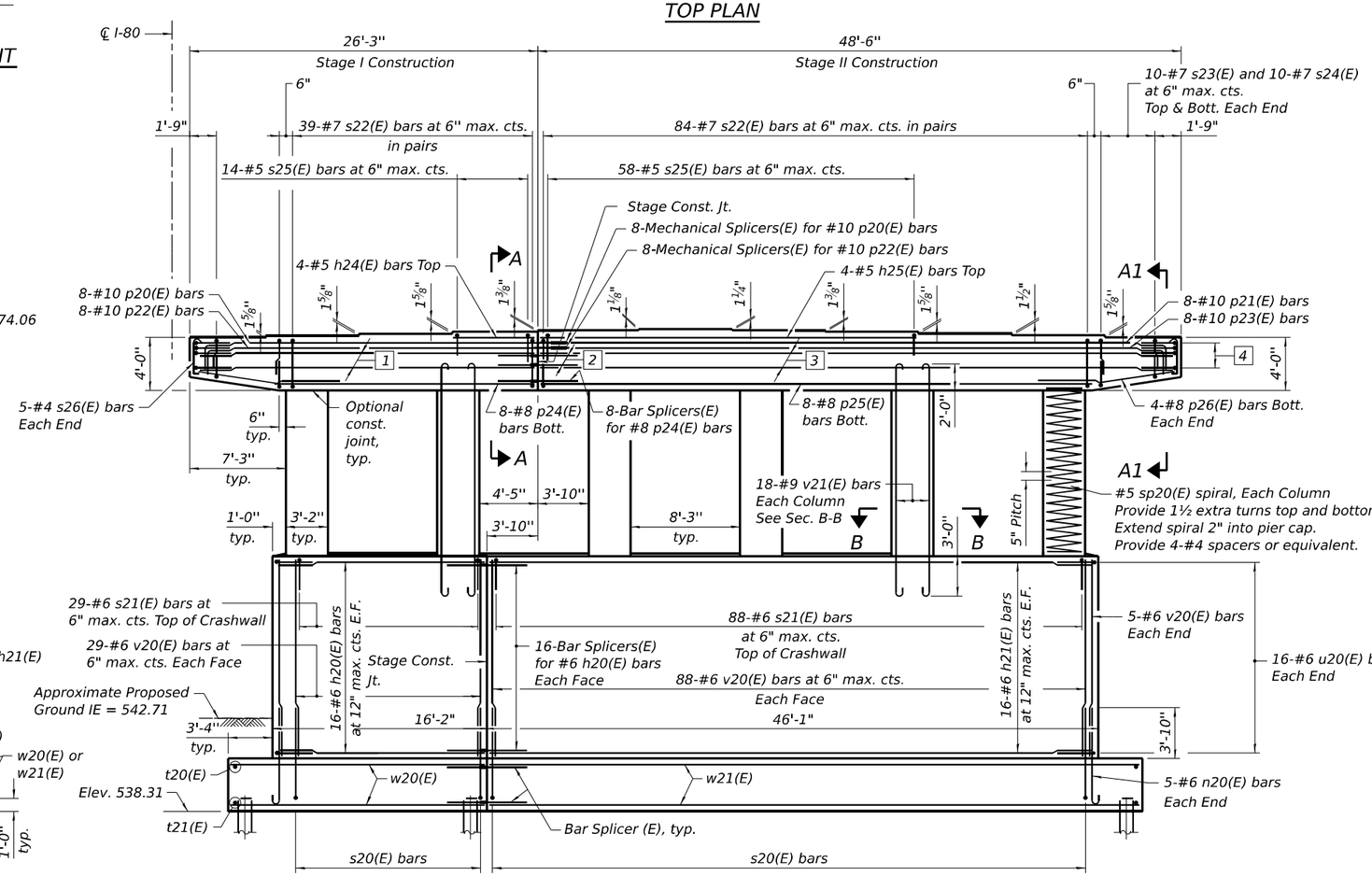

ELEVATION - PIER 2

Looking East

1. 4-#6 h22(E) bars E.F. Bend in field as req'd.
2. 4-Bar Splicers for #6 h22(E) bars, E.F.
3. 4-#6 h23(E) bars E.F. Bend in field as req'd.
4. 6-#5 u21(E) bars Each End

Notes:

1. Space reinforcement in cap to miss anchor bolts.
2. Pour steps monolithically with cap.
3. For details of piles, see Sheet SA-91.
4. For Sections A-A, A1-A1, and B-B, see Sheet SA-86.
5. For Bill of Material and bar bending diagrams, see Sheet SA-86.
6. For Bar Splicer and Mechanical Splicer details, see Sheet SA-92.

* The longitudinal bars in the pier cap are detailed with a 1 foot extension length beyond the stage construction joint to accommodate the mechanical couplers. Contractor shall adjust the extension length based on the selected mechanical splicer assembly.

MODEL: SHEET
FILE NAME: C:\TRANSYSTEMS\PW_LOCAL\TRANSYSTEMS-PW-01\DMS20864\0990902_0903-62F94-085-PIER2EB1.DGN

HNTB

USER NAME =	DESIGNED - SH	REVISED -	
	CHECKED - APC	REVISED -	
PLOT SCALE =	DRAWN - LK	REVISED -	
PLOT DATE =	CHECKED - SH	REVISED -	

STATE OF ILLINOIS
DEPARTMENT OF TRANSPORTATION

PIER 2 DETAILS 1 EB
STRUCTURE NO. 099-0902 (EB)

SHEET SA-85 OF SA-112 SHEETS

F.A.I. RTE.	SECTION	COUNTY	TOTAL SHEETS	SHEET NO.
80	2017-057F	WILL	1342	749
		CONTRACT NO. 62F94		
		ILLINOIS	FED. AID PROJECT	

10-27-2025, 16:50:29

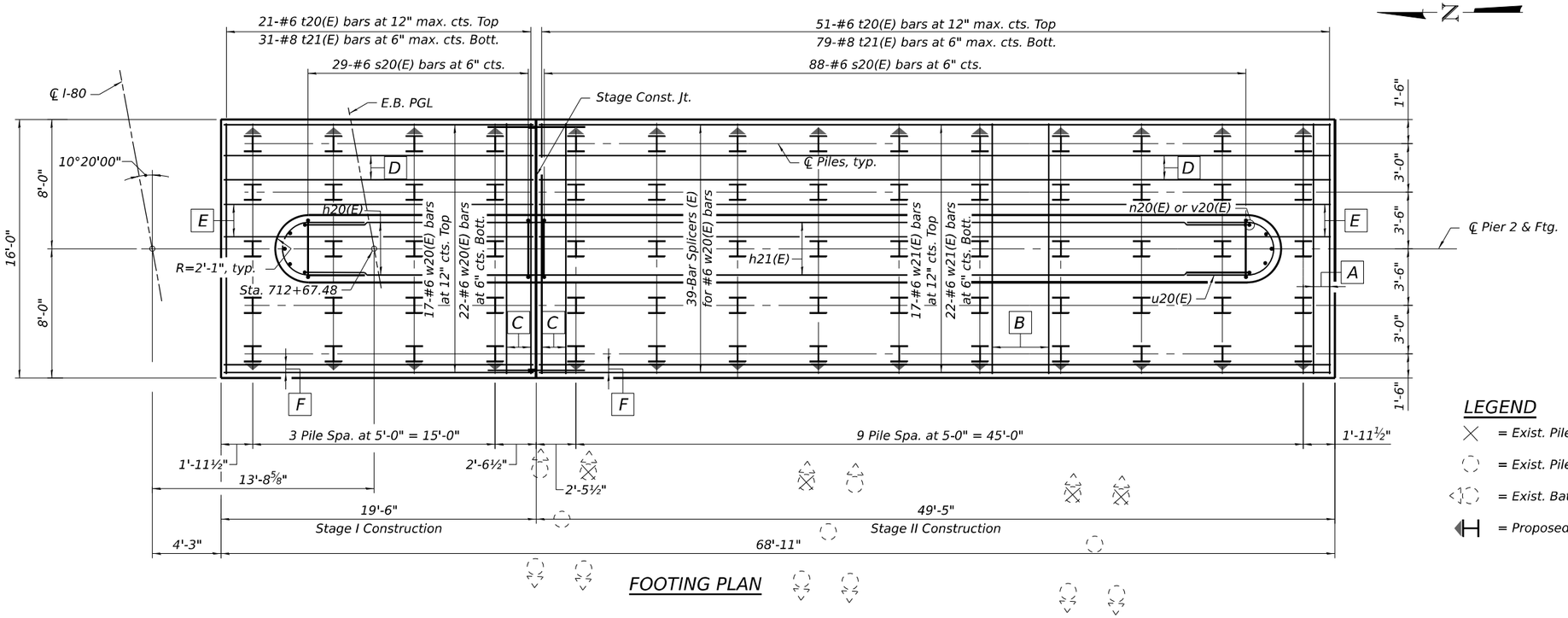

FOOTING PLAN

A	3-#8 t21(E) bars at 6" max. cts. Bott., typ.
B	8-#8 t21(E) bars at 6" max. cts. Bott., typ.
C	4-#8 t21(E) bars at 6" max. cts. Bott.
D	4-#6 w20(E) or w21(E) bars at 6" max. cts. Bott., typ.
E	5-#6 w20(E) or w21(E) bars at 6" max. cts. Bott., typ.
F	2-#6 w20(E) or w21(E) bars at 6" max. cts. Bott., typ.

LEGEND

- = Exist. Pile to be Removed
- = Exist. Pile
- = Exist. Battered Pile
- = Proposed Battered Pile

PIER 2
BILL OF MATERIAL

Bar	No.	Size	Length	Shape
h20(E)	32	#6	13'-11"	
h21(E)	32	#6	43'-10"	
h22(E)	8	#6	24'-4"	
h23(E)	8	#6	46'-7"	
h24(E)	4	#5	6'-1"	
h25(E)	4	#5	28'-4"	
n20(E)	10	#6	7'-9"	
p20(E)	8	#10	27'-4"	
p21(E)	8	#10	47'-7"	
p22(E)	8	#10	26'-10"	
p23(E)	8	#10	47'-1"	
p24(E)	8	#8	19'-4"	
p25(E)	8	#8	41'-7"	
p26(E)	8	#8	9'-2"	
s20(E)	117	#6	17'-2"	
s21(E)	117	#6	8'-4"	
s22(E)	246	#7	13'-7"	
s23(E)	40	#7	9'-0"	
s24(E)	40	#7	7'-5"	
s25(E)	72	#5	7'-2"	
s26(E)	10	#4	3'-5"	
** sp20(E)	6	#5	12'-8"	
t20(E)	72	#6	15'-6"	
t21(E)	110	#8	15'-6"	
u20(E)	32	#6	11'-2"	
u21(E)	12	#5	9'-4"	
v20(E)	244	#6	14'-11"	
v21(E)	108	#9	20'-0"	
w20(E)	39	#6	19'-1"	
w21(E)	39	#6	49'-0"	

Structure Excavation	Cu. Yd.	281
Concrete Structures	Cu. Yd.	372.8
Reinforcement Bars, Epoxy Coated	Pound	49,290
Furnishing Steel Piles, HP 12x53	Foot	2,070
Driving Piles	Foot	2,070
Test Pile Steel HP12x53	Each	1
Pile Shoes	Each	70
Pile Removal	Each	4

** Length is height of spiral.

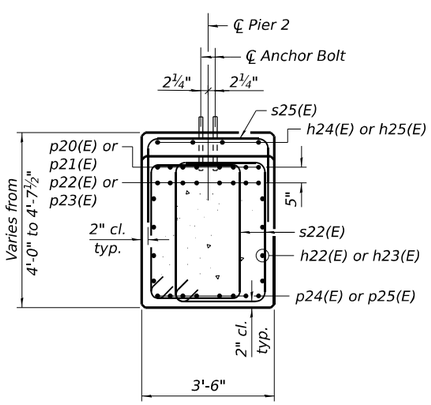

SECTION A-A

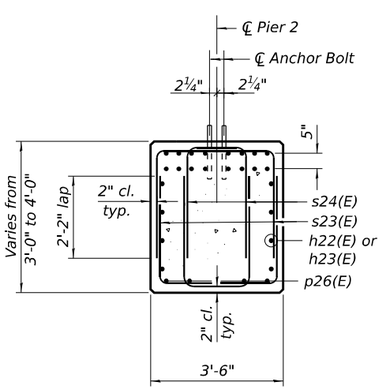

SECTION A1-A1

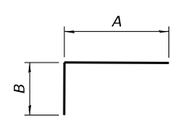

BARS p20(E) & p21(E), p22(E) & p23(E)

A & B DIMENSIONS

Bar	A	B
p20(E)	25'-6"	1'-10"
p21(E)	45'-9"	1'-10"
p22(E)	25'-0"	1'-10"
p23(E)	45'-3"	1'-10"

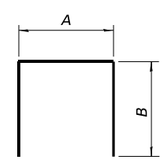

BARS s20(E), s21(E), s23(E) s24(E) & s25(E)

A & B DIMENSIONS

Bar	A	B
s20(E)	3'-10"	6'-8"
s21(E)	3'-10"	2'-3"
s23(E)	3'-2"	2'-11"
s24(E)	1'-7⅜"	2'-11"
s25(E)	3'-2"	2'-0"

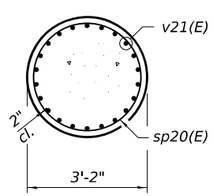

SECTION B-B

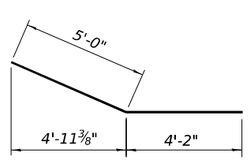

BAR p26(E)

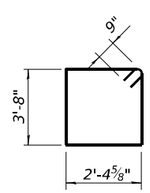

BAR s22(E)

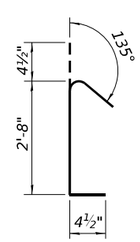

BAR s26(E)

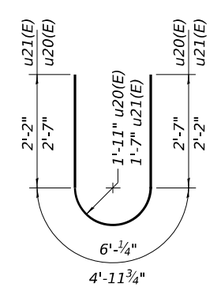

BARS u20(E) & u21(E)

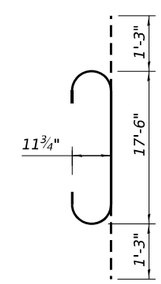

BAR v21(E)

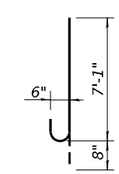

BAR n20(E)

PILE DATA

Type: HP 12x53 with pile shoes
Nominal Required Bearing: 418 kips
Factored Resistance Available: 230 kips
Est. Length: 30 ft
No. Production Piles: 69
No. Test Piles: 1

Notes:
1. For section locations, see Sheet SA-85.
2. Space reinforcement in pile cap to miss piles.
3. Piles shown as battered should be battered at 3H:12V.
4. For Bar Splicer details, see Sheet SA-93.
5. Contractor to verify all conflict locations between the existing and proposed piles.

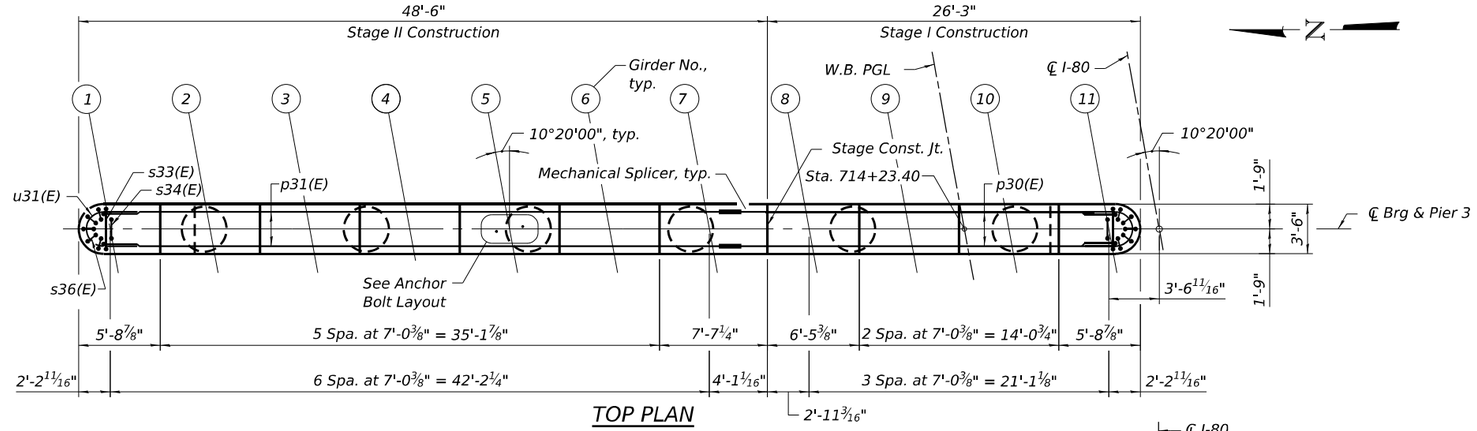

TOP PLAN

BRG. SEAT ELEVATIONS

Girder	Elev.
1	572.01
2	572.41
3	572.56
4	572.77
5	572.90
6	573.02
7	572.95
8	572.85
9	572.73
10	572.60
11	572.48

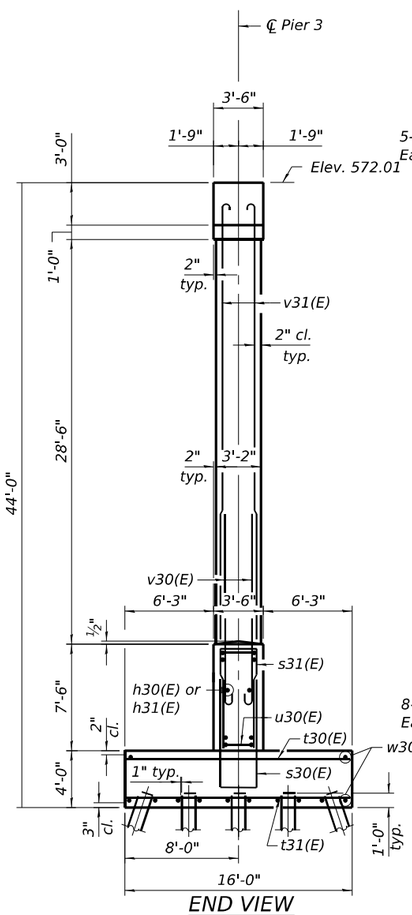

END VIEW

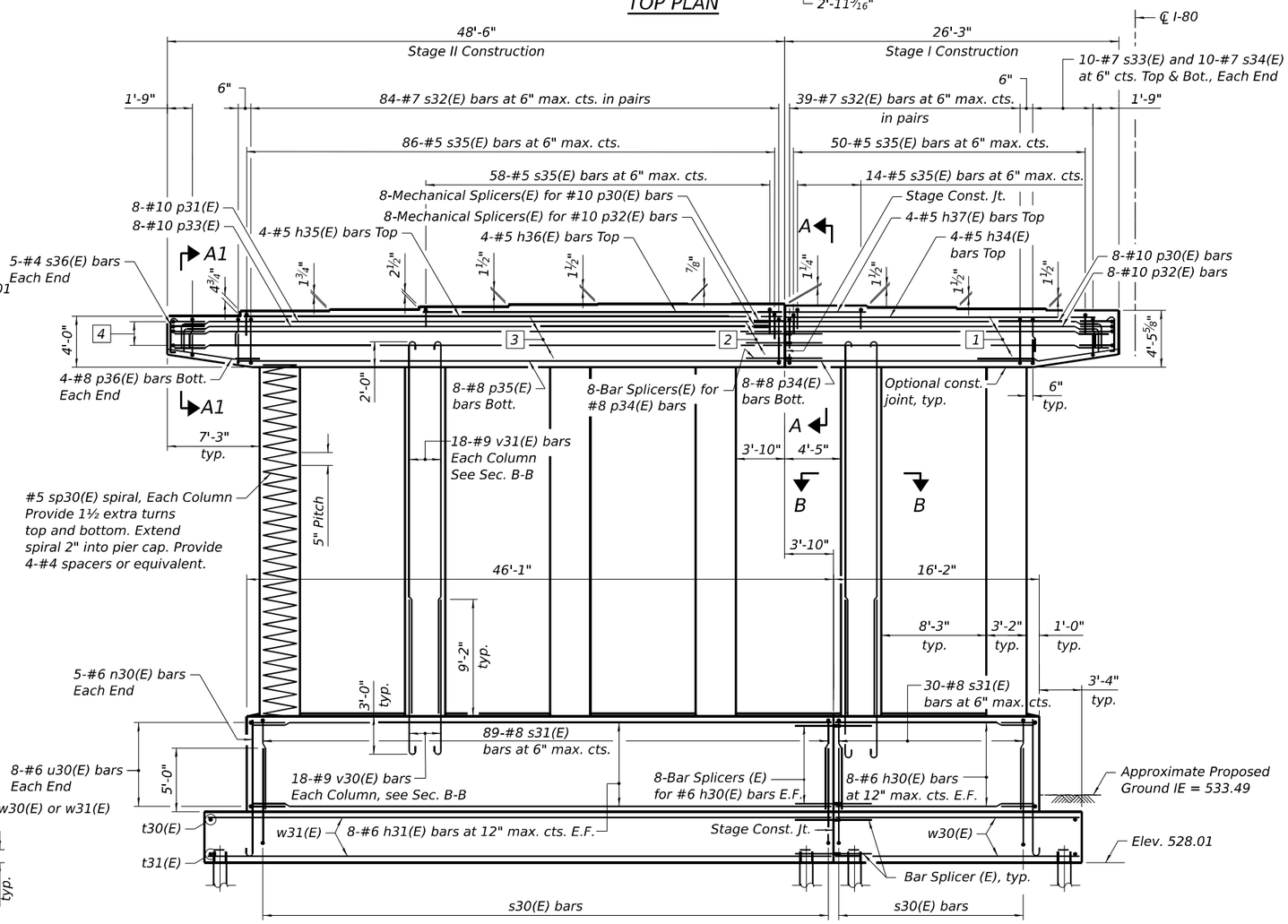

ELEVATION - PIER 3

Looking East

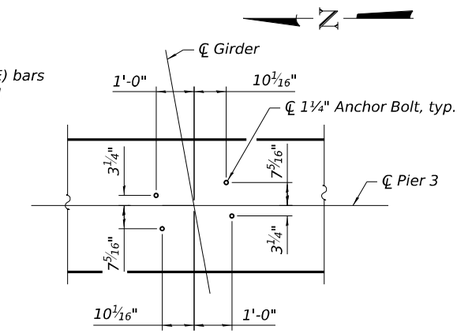

ANCHOR BOLT LAYOUT

1. 4-#6 h32(E) bars E.F. Bend in field as req'd.
2. 4-Bar Splicers for #6 h32(E) bars, E.F.
3. 4-#6 h33(E) bars E.F. Bend in field as req'd.
4. 6-#5 u31(E) bars Each End

Notes:

1. Space reinforcement in cap to miss anchor bolts.
2. Pour steps monolithically with cap.
3. For details of piles, see Sheet SA-91.
4. For sections A-A, A1-A1, B-B see, Sheet SA-88.
5. For Bill of Material and bar bending diagrams, see Sheet SA-88.
6. For Bar Splicer and Mechanical Splicer details, see Sheet SA-92.

MODEL: SHEET
FILE NAME: C:\TRANSYSTEMS\PW_LOCAL\TRANSYSTEMS-PW-01\DMS20864\0990902_0903-62F94-087-PIER3WB1.DGN
10-27-2025, 16:50:36

HNTB

USER NAME =	DESIGNED - SH	REVISED -	
	CHECKED - APC	REVISED -	
PLOT SCALE =	DRAWN - LK	REVISED -	
PLOT DATE =	CHECKED - SH	REVISED -	

STATE OF ILLINOIS
DEPARTMENT OF TRANSPORTATION

PIER 3 DETAILS 1 WB
STRUCTURE NO. 099-0903 (WB)

SHEET SA-87 OF SA-112 SHEETS

F.A.I. RTE.	SECTION	COUNTY	TOTAL SHEETS	SHEET NO.
80	2017-057F	WILL	1342	751

CONTRACT NO. 62F94

ILLINOIS FED. AID PROJECT

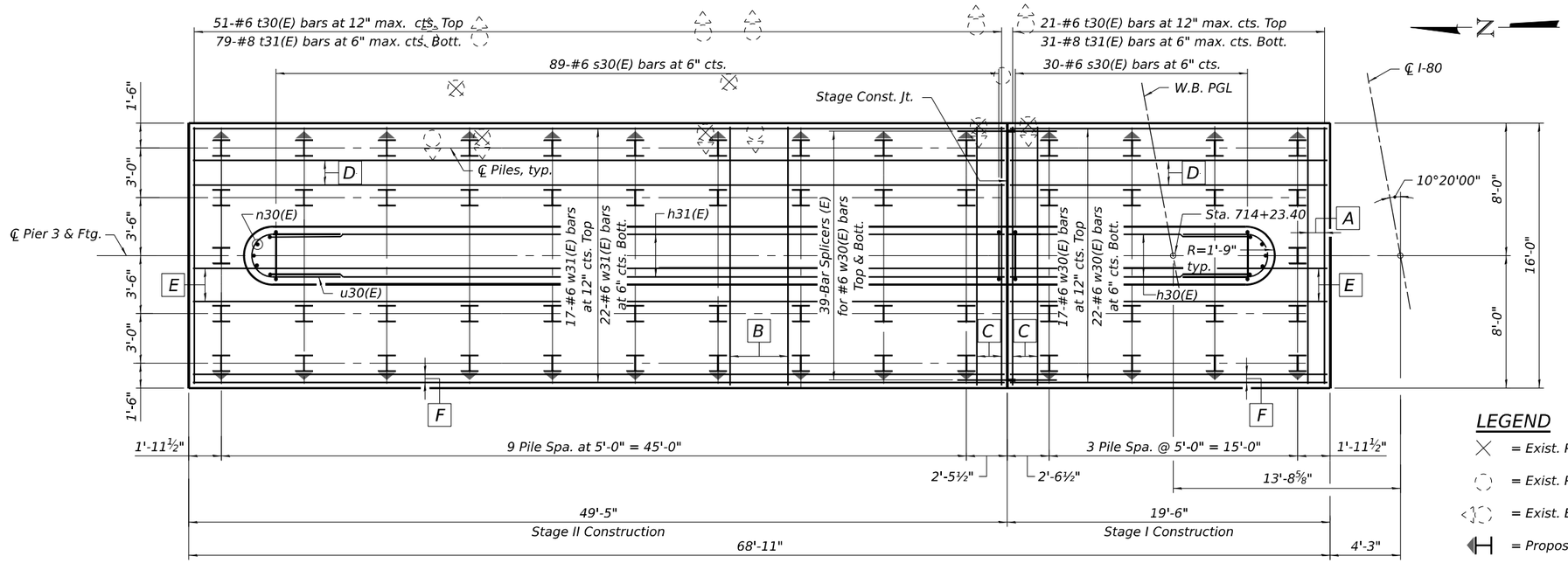

FOOTING PLAN

LEGEND

- = Exist. Pile to be Removed
- = Exist. Pile
- = Exist. Battered Pile
- = Proposed Battered Pile

PIER 3
BILL OF MATERIAL

Bar	No.	Size	Length	Shape
h30(E)	16	#6	14'-3"	
h31(E)	16	#6	44'-2"	
h32(E)	8	#6	24'-4"	
h33(E)	8	#6	46'-7"	
h34(E)	4	#5	24'-2"	
h35(E)	4	#5	42'-5"	
h36(E)	4	#5	28'-4"	
h37(E)	4	#5	6'-1"	
n30(E)	10	#6	10'-10"	
p30(E)	8	#10	27'-4"	
p31(E)	8	#10	47'-7"	
p32(E)	8	#10	26'-10"	
p33(E)	8	#10	47'-1"	
p34(E)	8	#8	19'-4"	
p35(E)	8	#8	41'-7"	
p36(E)	8	#8	9'-2"	
s30(E)	119	#8	18'-10"	
s31(E)	119	#8	17'-6"	
s32(E)	246	#7	13'-3"	
s33(E)	40	#7	9'-0"	
s34(E)	40	#7	7'-1"	
s35(E)	208	#5	7'-2"	
s36(E)	10	#4	3'-5"	
sp30(E) **	6	#5	28'-8"	
t30(E)	72	#6	15'-6"	
t31(E)	110	#8	15'-6"	
u30(E)	16	#6	10'-2"	
u31(E)	12	#5	9'-4"	
v30(E)	108	#9	13'-5"	
v31(E)	108	#9	31'-7"	
w30(E)	39	#6	19'-1"	
w31(E)	39	#6	49'-0"	
Structure Excavation			Cu. Yd.	275
Concrete Structures			Cu. Yd.	318.5
Reinforcement Bars, Epoxy Coated			Pound	61,670
Furnishing Steel Piles, HP 12x53			Foot	1,518
Driving Piles			Foot	1,518
Test Pile Steel HP12x53			Each	1
Pile Removal			Each	6
Pile Shoes			Each	70

** Length is height of spiral.

A 3-#8 t31(E) bars at 6" max. cts. Bott., typ.

B 8-#8 t31(E) bars at 6" max. cts. Bott., typ.

C 4-#8 t31(E) bars at 6" max. cts. Bott.

D 4-#6 w30(E) or w31(E) bars at 6" max. cts. Bott., typ.

E 5-#6 w30(E) or w31(E) bars at 6" max. cts. Bott., typ.

F 2-#6 w30(E) or w31(E) bars at 6" max. cts. Bott., typ.

PILE DATA

Type: HP 12x53 with pile shoes
Nominal Required Bearing: 418 kips
Factored Resistance Available: 230 kips
Est. Length: 22 ft
No. Production Piles: 69
No. Test Piles: 1

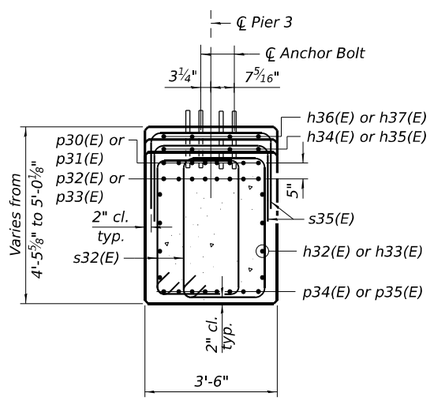

SECTION A-A

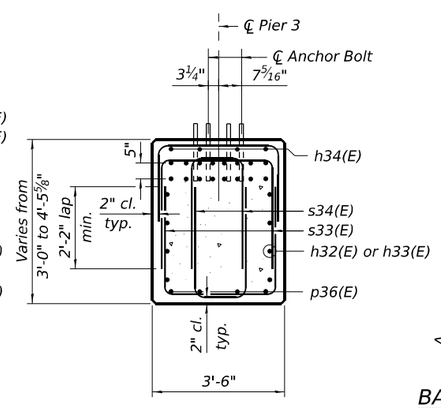

SECTION A1-A1

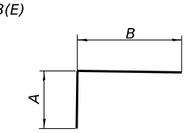

BARS p30(E) & p31(E), p32(E) & p33(E)

A & B DIMENSIONS

Bar	A	B
p30(E)	25'-6"	1'-10"
p31(E)	45'-9"	1'-10"
p32(E)	25'-0"	1'-10"
p33(E)	45'-3"	1'-10"

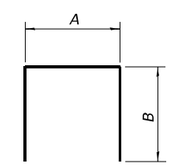

BARS s30(E), s31(E), s33(E), s34(E) & s35(E)

A & B DIMENSIONS

Bar	A	B
s30(E)	3'-2"	7'-10"
s31(E)	3'-2"	7'-2"
s33(E)	3'-2"	2'-11"
s34(E)	1'-3⅛"	2'-11"
s35(E)	3'-2"	2'-0"

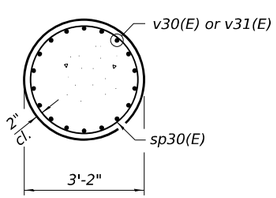

SECTION B-B

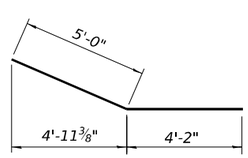

BAR p36(E)

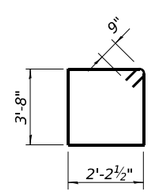

BAR s32(E)

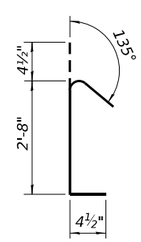

BAR s36(E)

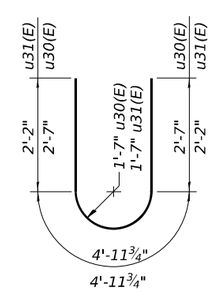

BARS u30(E) & u31(E)

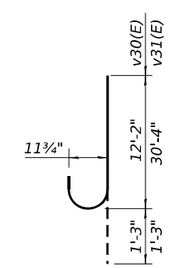

BARS v30(E) & v31(E)

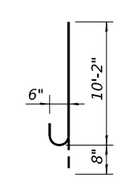

BAR n30(E)

Notes:
1. For section locations, see Sheet SA-87.
2. Space reinforcement in pile cap to miss piles.
3. Piles shown as battered should be battered at 3H:12V.
4. When splicing of spiral reinforcement is necessary, the spirals shall be provided with 11/2 extra turns at the ends to be spliced. These additional turns shall either be welded together according to AWS D1.4, or shall both terminate with a 135° standard hook.
5. For Bar Splicer details, see Sheet SA-92.
6. Contractor to verify all conflict locations between the existing and proposed piles.

MODEL: SHEET
FILE NAME: C:\TRANSYSTEMS\PW_LOCAL\TRANSYSTEMS-PW-01\DMS20864\0990902_0903-62F94-088-PIER3WB2.DGN

HNTB

USER NAME =	DESIGNED - SH	REVISED -	
	CHECKED - APC	REVISED -	
PLOT SCALE =	DRAWN - LK	REVISED -	
PLOT DATE =	CHECKED - SH	REVISED -	

STATE OF ILLINOIS
DEPARTMENT OF TRANSPORTATION

PIER 3 DETAILS 2 WB
STRUCTURE NO. 099-0903 (WB)

SHEET SA-88 OF SA-112 SHEETS

F.A.I. RTE.	SECTION	COUNTY	TOTAL SHEETS	SHEET NO.
80	2017-057F	WILL	1342	752

CONTRACT NO. 62F94
ILLINOIS FED. AID PROJECT

10-27-2025, 16:50:39

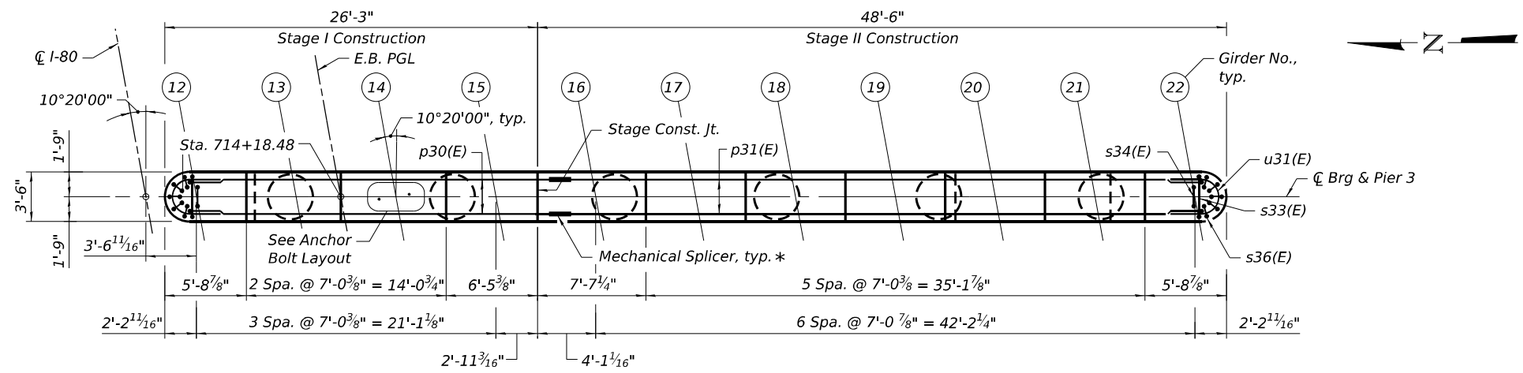

TOP PLAN

BRG. SEAT ELEVATIONS

Girder	Elev.
12	572.49
13	572.64
14	572.79
15	572.94
16	573.07
17	573.17
18	573.08
19	572.97
20	572.85
21	572.72
22	572.59

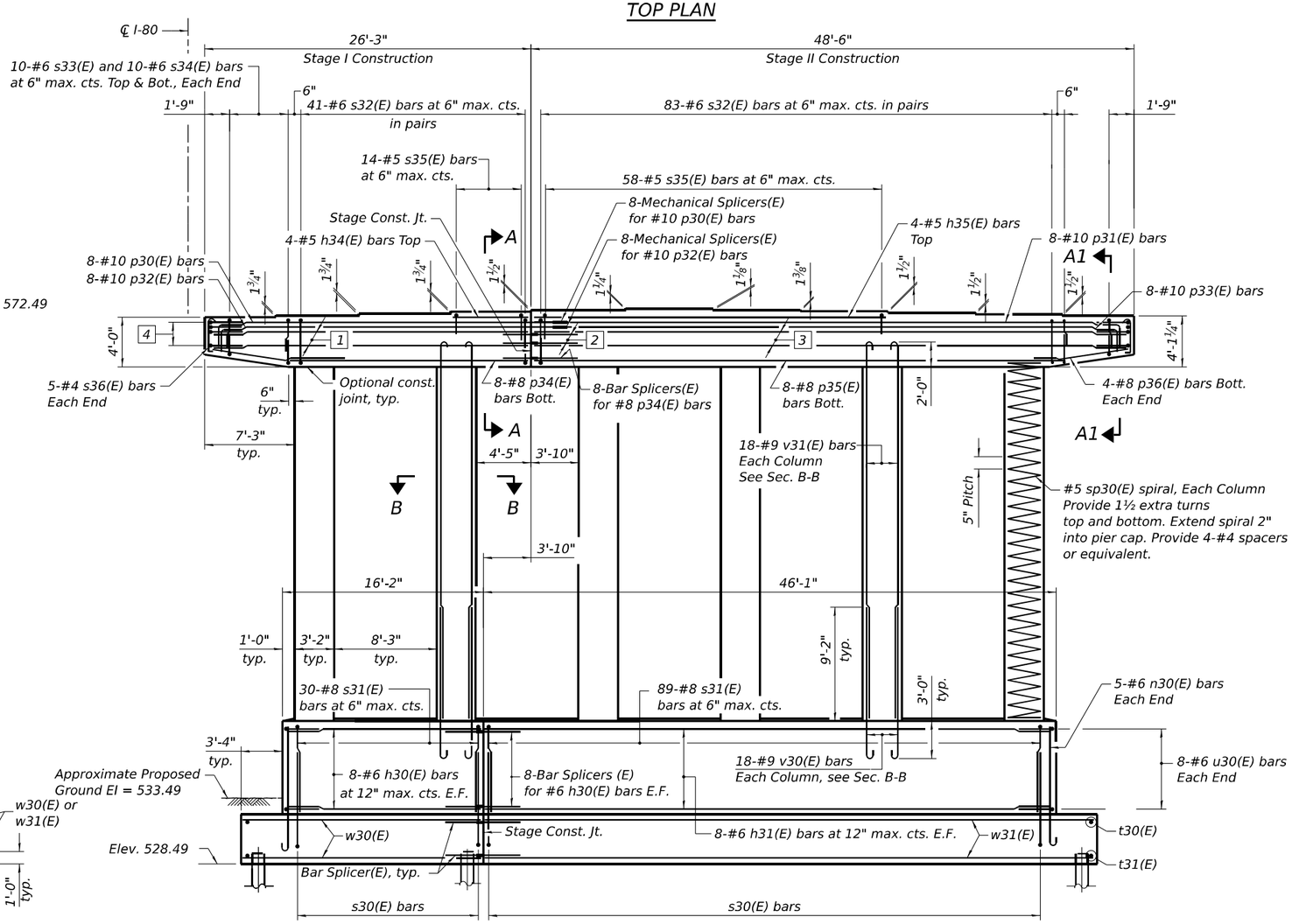

ELEVATION - PIER 3

Looking East

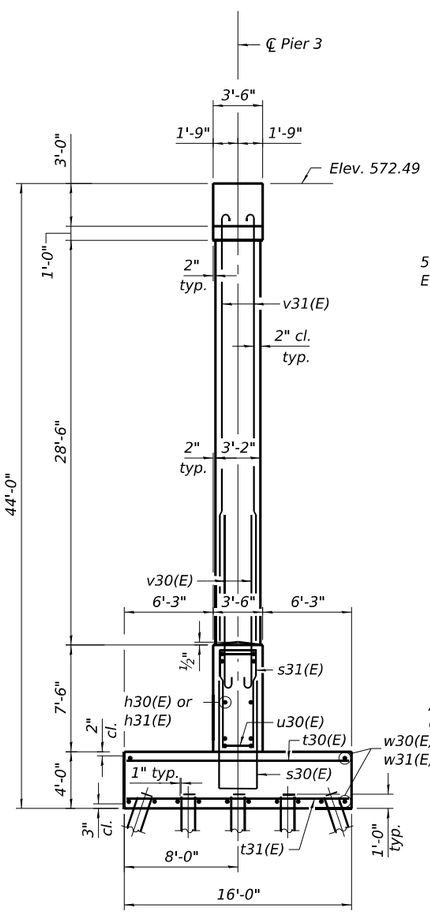

END VIEW

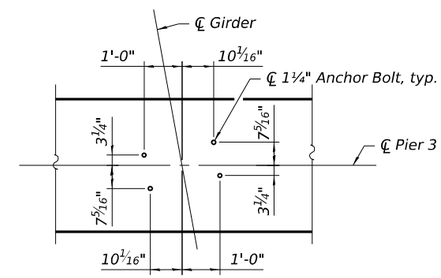

ANCHOR BOLT LAYOUT

1. 4-#6 h32(E) bars E.F. Bend in field as req'd.
2. 4-Bar Splicers for #6 h32(E) bars, E.F.
3. 4-#6 h33(E) bars E.F. Bend in field as req'd.
4. 6-#5 u31(E) bars Each End

Notes:

1. Space reinforcement in cap to miss anchor bolts.
2. Pour steps monolithically with cap.
3. For details of piles, see Sheet SA-91.
4. For sections A-A, A1-A1, B-B see, Sheet SA-90.
5. For Bill of Material and bar bending diagrams, see Sheet SA-90.
6. For Bar Splicer and Mechanical Splicer details, see Sheet SA-92.

* The longitudinal bars in the pier cap are detailed with a 1 foot extension length beyond the stage construction joint to accommodate the mechanical couplers. Contractor shall adjust the extension length based on the selected mechanical splicer assembly.

MODEL: SHEET
FILE NAME: C:\TRANSYSTEMS\PW_LOCAL\TRANSYSTEMS-PW-01\DMS20864\0990902_0903-62F94-089-PIER3EB1.DGN
10-27-2025, 16:50:42

HNTB

USER NAME =	DESIGNED - SH	REVISED -	
	CHECKED - APC	REVISED -	
PLOT SCALE =	DRAWN - LK	REVISED -	
PLOT DATE =	CHECKED - SH	REVISED -	

STATE OF ILLINOIS
DEPARTMENT OF TRANSPORTATION

PIER 3 DETAILS 1 EB
STRUCTURE NO. 099-0902 (EB)

SHEET SA-89 OF SA-112 SHEETS

F.A.I. RTE.	SECTION	COUNTY	TOTAL SHEETS	SHEET NO.
80	2017-057F	WILL	1342	753
		CONTRACT NO. 62F94		
	ILLINOIS	FED. AID PROJECT		

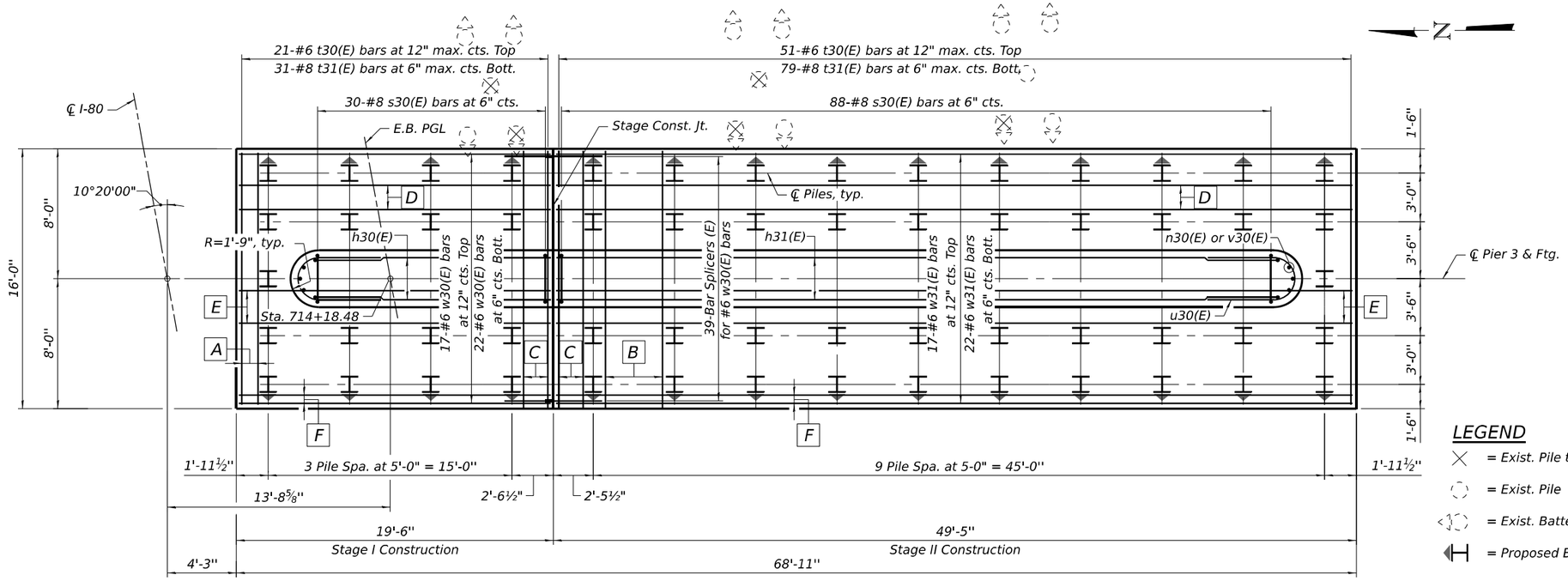

FOOTING PLAN

A	3-#8 t31(E) bars at 6" max. cts. Bott., typ.
B	8-#8 t31(E) bars at 6" max. cts. Bott., typ.
C	4-#8 t31(E) bars at 6" max. cts. Bott.
D	4-#6 w30(E) or w31(E) bars at 6" max. cts. Bott., typ.
E	5-#6 w30(E) or w31(E) bars at 6" max. cts. Bott., typ.
F	2-#6 w30(E) or w31(E) bars at 6" max. cts. Bott., typ.

PIER 3
BILL OF MATERIAL

Bar	No.	Size	Length	Shape
h30(E)	16	#6	14'-3"	
h31(E)	16	#6	44'-2"	
h32(E)	8	#6	24'-4"	
h33(E)	8	#6	46'-7"	
h34(E)	4	#5	6'-1"	
h35(E)	4	#5	28'-4"	
n30(E)	10	#6	10'-10"	
p30(E)	8	#10	27'-4"	
p31(E)	8	#10	47'-7"	
p32(E)	8	#10	26'-10"	
p33(E)	8	#10	47'-1"	
p34(E)	8	#8	19'-4"	
p35(E)	8	#8	41'-7"	
p36(E)	8	#8	9'-2"	
s30(E)	119	#8	18'-10"	
s31(E)	119	#8	17'-6"	
s32(E)	246	#6	13'-3"	
s33(E)	40	#6	9'-0"	
s34(E)	40	#6	7'-1"	
s35(E)	72	#5	7'-2"	
s36(E) **	10	#4	3'-5"	
sp30(E)	6	#5	28'-8"	
t30(E)	72	#6	15'-6"	
t31(E)	110	#8	15'-6"	
u30(E)	16	#6	10'-2"	
u31(E)	12	#5	9'-4"	
v30(E)	108	#9	13'-5"	
v31(E)	108	#9	31'-7"	
w30(E)	39	#6	19'-1"	
w31(E)	39	#6	49'-0"	
Structure Excavation			Cu. Yd.	266
Concrete Structures			Cu. Yd.	314.7
Reinforcement Bars, Epoxy Coated			Pound	60,380
Furnishing Steel Piles, HP12x53			Foot	1,311
Driving Piles			Foot	1,311
Test Pile Steel HP12x53			Each	1
Pile Shoes			Each	70
Pile Removal			Each	5

** Length is height of spiral.

LEGEND

- = Exist. Pile to be Removed
- = Exist. Pile
- = Exist. Battered Pile
- = Proposed Battered Pile

PILE DATA

Type: HP 12x53 with pile shoes
Nominal Required Bearing: 418 kips
Factored Resistance Available: 230 kips
Est. Length: 19 ft
No. Production Piles: 69
No. Test Piles: 1

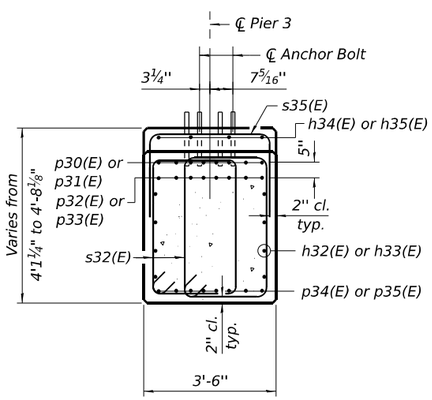

SECTION A-A

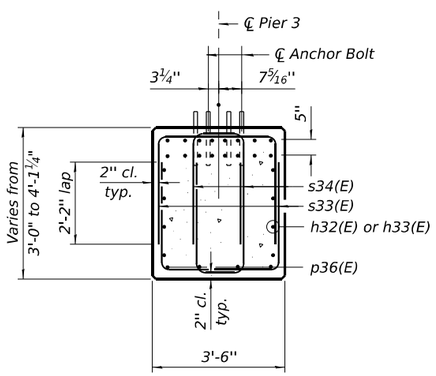

SECTION A1-A1

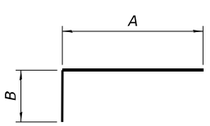

BARS p30(E), p31(E), p32(E) & p33(E)

A & B DIMENSIONS

Bar	A	B
p30(E)	25'-6"	1'-10"
p31(E)	45'-9"	1'-10"
p32(E)	25'-0"	1'-10"
p33(E)	45'-3"	1'-10"

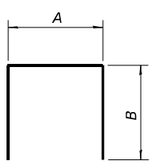

BARS s30(E), s31(E), s33(E), s34(E) & s35(E)

A & B DIMENSIONS

Bar	A	B
s30(E)	3'-2"	7'-10"
s31(E)	3'-2"	7'-2"
s33(E)	3'-2"	2'-11"
s34(E)	1'-3⅛"	2'-11"
s35(E)	3'-2"	2'-0"

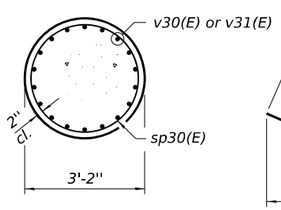

SECTION B-B

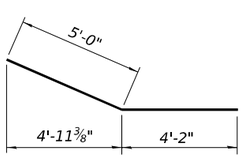

BAR p36(E)

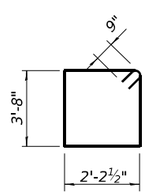

BAR s32(E)

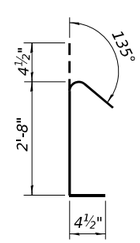

BAR s36(E)

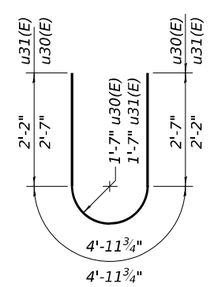

BARS u30(E) & u31(E)

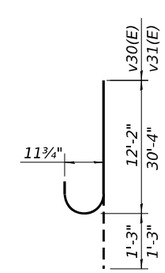

BARS v30(E) & v31(E)

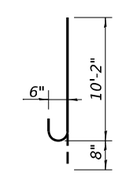

BAR n30(E)

Notes:
1. For section locations, see Sheet SA-89.
2. Space reinforcement in pile cap to miss piles.
3. Piles shown as battered should be battered at 3H:12V.
4. When splicing of spiral reinforcement is necessary, the spirals shall be provided with 1½ extra turns at the ends to be spliced. These additional turns shall either be welded together according to AWS D1.4, or shall both terminate with a 135° standard hook.
5. For Bar Splicer details, see Sheet SA-92.
6. Contractor to verify all conflict locations between the existing and proposed piles.

MODEL: SHEET
FILE NAME: C:\TRANSYSTEMS\PW_LOCAL\TRANSYSTEMS-PW-01\DMS20864\0990902_0903-62F94-090-PIER3EB2.DGN
10-27-2025, 16:50:45

HNTB

USER NAME =	DESIGNED - SH	REVISED -	
	CHECKED - APC	REVISED -	
PLOT SCALE =	DRAWN - LK	REVISED -	
PLOT DATE =	CHECKED - SH	REVISED -	

STATE OF ILLINOIS
DEPARTMENT OF TRANSPORTATION

PIER 3 DETAILS 2 EB
STRUCTURE NO. 099-0902 (EB)
SHEET SA-90 OF SA-112 SHEETS

F.A.I. RTE.	SECTION	COUNTY	TOTAL SHEETS	SHEET NO.
80	2017-057F	WILL	1342	754
		CONTRACT NO. 62F94		
		ILLINOIS	FED. AID PROJECT	

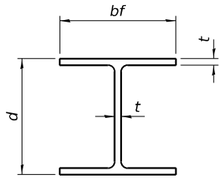

STEEL PILE TABLE

Designation	Depth d	Flange width bf	Web and Flange thickness t	Encasement diameter A
HP 18x181	18	18	1	36"
x157	17¾"	17⅞"	⅞"	36"
x135	17½"	17¾"	¾"	36"
HP 16x183	16½"	16½"	1⅛"	36"
x162	16¼"	16⅛"	1"	36"
x141	16	16	⅞"	36"
x121	15¾"	15⅞"	¾"	36"
HP 14x117	14¼"	14⅞"	13/16"	30"
x102	14"	14¾"	11/16"	30"
x89	13⅞"	14¾"	⅝"	30"
x73	13⅝"	14⅝"	½"	30"
HP 12x84	12¼"	12¼"	11/16"	24"
x74	12⅛"	12¼"	⅝"	24"
x63	12"	12⅛"	½"	24"
x53	11¾"	12"	7/16"	24"
HP 10x57	10"	10¼"	9/16"	24"
x42	9¾"	10⅛"	7/16"	24"
HP 8x36	8"	8⅛"	7/16"	18"

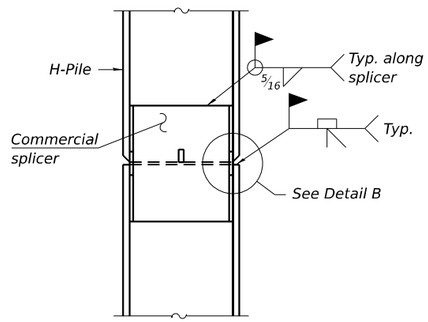

ELEVATION

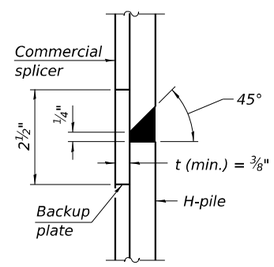

DETAIL B

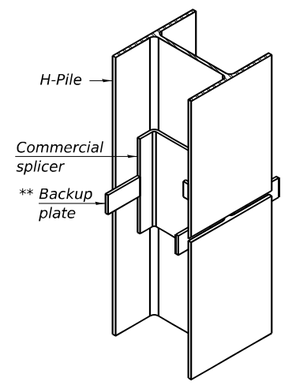

ISOMETRIC VIEW

WELDED COMMERCIAL SPLICE

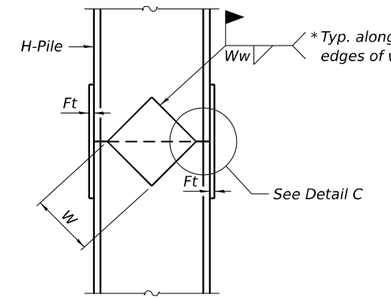

ELEVATION

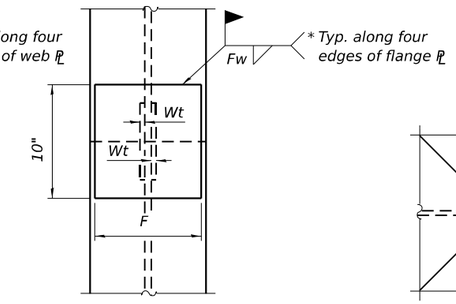

END VIEW

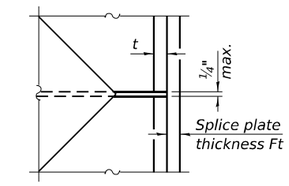

DETAIL C

Designation	F	Ft	Fw	W	Wt	Ww
HP 18x181	15½"	1½"	1"	9½"	⅞"	¾"
x157	15¼"	1¼"	1"	9½"	⅞"	¾"
x135	15¼"	1¼"	1"	9½"	⅞"	¾"
HP 16x183	13¾"	1½"	1"	8¼"	⅞"	¾"
x162	13½"	1½"	1"	8¼"	¾"	⅝"
x141	13½"	1¼"	⅞"	8¼"	¾"	⅝"
x121	13½"	1¼"	⅞"	8¼"	¾"	⅝"
HP 14x117	12½"	1¼"	⅞"	7¾"	⅝"	½"
x102	12½"	1"	¾"	7¾"	⅝"	½"
x89	12½"	⅞"	11/16"	7¾"	⅝"	½"
x73	12½"	¾"	9/16"	7¾"	⅝"	½"
HP 12x84	10"	1"	11/16"	6½"	⅝"	½"
x74	10"	⅞"	11/16"	6½"	⅝"	½"
x63	10"	¾"	½"	6½"	½"	⅜"
x53	10"	¾"	½"	6½"	½"	⅜"
HP 10x57	8"	⅞"	9/16"	5¼"	½"	⅜"
x42	8"	¾"	9/16"	5¼"	½"	⅜"
HP 8x36	6¾"	⅝"	7/16"	4"	½"	⅜"

WELDED PLATE FIELD SPLICE

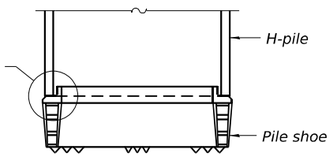

ELEVATION

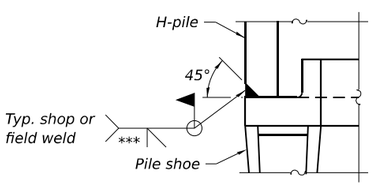

DETAIL A

SHOE ATTACHMENT

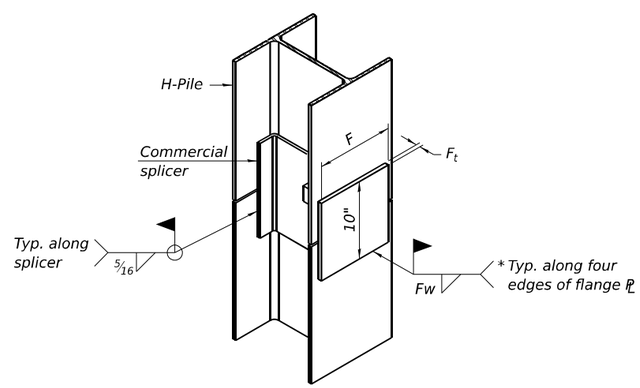

ISOMETRIC VIEW

WELDED COMMERCIAL SPLICE ALTERNATE

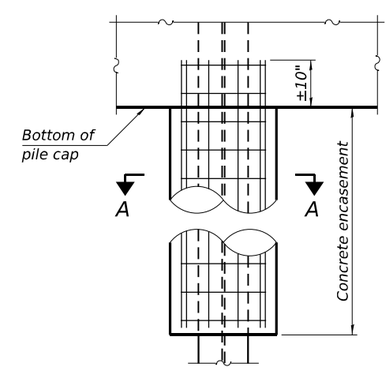

ELEVATION

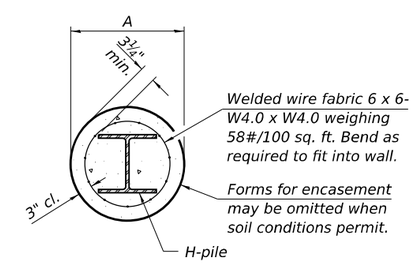

SECTION A-A

INDIVIDUAL PILE CONCRETE ENCASEMENT
(when specified)

Note:
The steel H-piles shall be according to AASHTO M270 Grade 50.

* Interrupt welds ¼" from end of web and/or each flange.

** Remove portions of backup plates that extend outside the flanges.

*** Weld size per pile shoe manufacturer (5/16" min.).

F-HP 10-27-2023

MODEL: SHEET
FILE NAME: C:\TRANSYSTEMS\PW_LOCAL\TRANSYSTEMS-PW-01\DMS20864\0990902_0903-62F94-091-PILE.DGN

10-27-2025, 16:50:49

HNTB

USER NAME =	DESIGNED - MVV	REVISED -	
	CHECKED - APC	REVISED -	
PLOT SCALE =	DRAWN - LK	REVISED -	
PLOT DATE =	CHECKED - MVV	REVISED -	

STATE OF ILLINOIS
DEPARTMENT OF TRANSPORTATION

HP PILE DETAIL
STRUCTURE NOS. 099-0902 (EB) & 099-0903 (WB)

SHEET SA-91 OF SA-112 SHEETS

F.A.I. RTE.	SECTION	COUNTY	TOTAL SHEETS	SHEET NO.
80	2017-057F	WILL	1342	755
		CONTRACT NO. 62F94		
		ILLINOIS	FED. AID PROJECT	

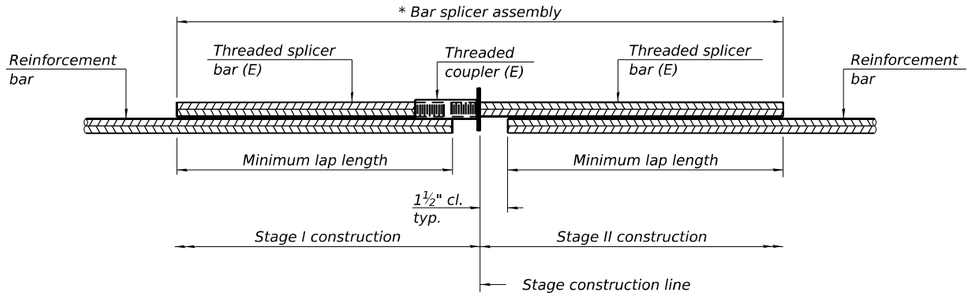

STANDARD BAR SPLICER ASSEMBLY PLAN

Only bar splicer assemblies as presented on the approved QPL list may be used.

Threaded splicer bar length = min. lap length + 1½" + thread length

* Epoxy not required on Bar Splicer Assembly components used in conjunction with black bars.

Location	Bar size	No. assemblies required	Minimum lap length
Pier 1 (WB)	#8	8	7'-2"
Pier 1 (WB)	#6	63	3'-10"
Pier 1 (EB)	#8	8	7'-2"
Pier 1 (EB)	#6	63	3'-10"
Pier 2 (WB)	#8	8	7'-2"
Pier 2 (WB)	#6	79	3'-10"
Pier 2 (EB)	#8	8	7'-2"
Pier 2 (EB)	#6	79	3'-10"
Pier 3 (WB)	#8	8	7'-2"
Pier 3 (WB)	#6	63	3'-10"
Pier 3 (EB)	#8	8	7'-2"
Pier 3 (EB)	#6	63	3'-10"
West Abut. (WB)	#7	12	5'-6"
West Abut. (WB)	#4	6	2'-7"
West Abut. (EB)	#7	12	5'-6"
West Abut. (EB)	#4	6	2'-7"
East Abut. (WB)	#7	12	5'-6"
East Abut. (WB)	#4	6	2'-7"
East Abut. (EB)	#7	12	5'-6"
East Abut. (EB)	#4	6	2'-7"
Deck Slab (WB)	#5	1,994	3'-6"
Deck Slab (EB)	#5	1,629	3'-6"
Appr. Slabs (WB)	#5	147	3'-6"
Appr. Slabs (EB)	#5	142	3'-6"
Diaphragms (WB)	#6	26	4'-0"
Diaphragms (WB)	#4	4	2'-8"
Diaphragms (EB)	#6	26	4'-0"
Diaphragms (EB)	#4	4	2'-8"

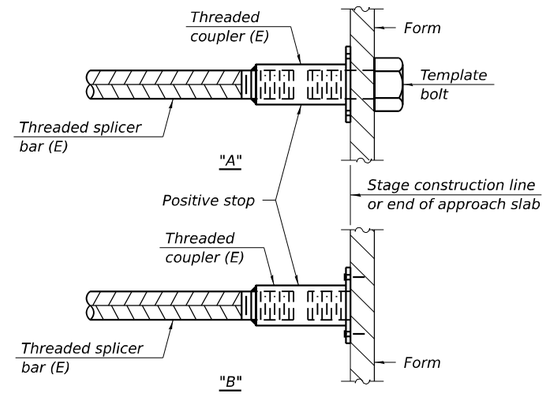

INSTALLATION AND SETTING METHODS

"A" : Set bar splicer assembly by means of a template bolt.
"B" : Set bar splicer assembly by nailing to wood forms or cementing to steel forms.
(E) : Indicates epoxy coating.

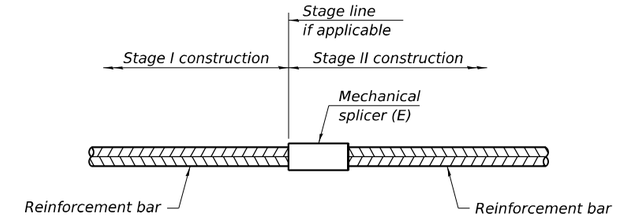

STANDARD MECHANICAL SPLICER

Location	Bar size	No. assemblies required
Pier 1 (WB)	#10	16
Pier 1 (EB)	#10	16
Pier 2 (WB)	#10	16
Pier 2 (EB)	#10	16
Pier 3 (WB)	#10	16
Pier 3 (EB)	#10	16

Notes:
Splicer bars shall be deformed with threaded ends and have a minimum 60 ksi yield strength.
All reinforcement shall be lapped and tied to the splicer bars.
Bar splicer assemblies shall be epoxy coated according to the requirements for reinforcement bars. See Section 508 of the Standard Specifications.
See approved list of bar splicer assemblies and mechanical splicers for alternatives.

BSD-1 5-15-2023

Geo Services, Inc.
Geotechnical, Environmental & Civil Engineering
805 Amherst Court, Suite 204
Naperville, Illinois 60565
(630) 355-2888

SOIL BORING LOG

GSI Job No. 13125
Page 1 of 3
Date 3/11/14

ROUTE F.A.I RTE. 80 DESCRIPTION I-80 Phase II (Near Term) LOGGED BY NW
SECTION LOCATION SW 1/4, SEC. 15, TWP. T35N, RNG. R10E, 3rd PM
COUNTY Will DRILLING METHOD Hollow Stem Auger/Rotary HAMMER TYPE CME Automatic

STRUCT. NO.
Station
BORING NO. BSB-01
Station 711+03
Offset 55.20ft Left
Ground Surface Elev. 577.10 ft

Surface Water Elev. n/a ft
Stream Bed Elev. n/a ft
Groundwater Elev.:
First Encounter 561.1 ft ▼
Upon Completion 574.1 ft ▽
After ___ Hrs. ___ ft

Description	DEPTH (ft)	BLOWS (/6")	UCS Qu (tsf)	MOIST (%)
7.5" ASPHALT, 12.0" CONCRETE				
575.48				
CLAY LOAM-brown & gray-stiff to hard (Fill)		1		
		2	1.1	22
	▽	2	B	
		4		
		6	2.0	15
	-5	8	P	
		3		
		4	4.0	17
		5	P	
		4		
		4	1.3	23
	-10	5	B	
		5		
		7		22
		8		
		2		
		2		21
	-15	3		
	▼	3		
		4	1.2	18
		8	R	
		7		
		11		17
	-20	13		
CLAY LOAM-brown & gray-stiff to hard (Fill) *(continued)*		9		
		14	1.0	19
		14	P	
		8		
		6	2.4	15
	-25	9	B	
		1		
		5	2.5	18
		9	P	
		3		
		7	2.2	20
	-30	7	B	
545.10				
SAND & GRAVEL-brown-medium dense (Fill)		6		
		7		15
	-35	8		
540.10				
CLAY LOAM-brown & gray-very stiff (Fill)		8		
		11	2.0	17
	-40	17	P	

The Unconfined Compressive Strength (UCS) Failure Mode is indicated by (B-Bulge, S-Shear, P-Penetrometer)
The SPT (N value) is the sum of the last two blow values in each sampling zone (AASHTO T206)

BBS, from 137 (Rev. 8-99)

Z:\PROJECTS\2013\1125 HNTB, I-80 PHASE II (NEAR TERM)\13125 BORING LOGS\13125_LOG.GPJ 6/24/14

Geo Services, Inc.
Geotechnical, Environmental & Civil Engineering
805 Amherst Court, Suite 204
Naperville, Illinois 60565
(630) 355-2888

SOIL BORING LOG

GSI Job No. 13125
Page 2 of 3
Date 3/11/14

ROUTE F.A.I RTE. 80 DESCRIPTION I-80 Phase II (Near Term) LOGGED BY NW
SECTION LOCATION SW 1/4, SEC. 15, TWP. T35N, RNG. R10E, 3rd PM
COUNTY Will DRILLING METHOD Hollow Stem Auger/Rotary HAMMER TYPE CME Automatic

STRUCT. NO.
Station
BORING NO. BSB-01
Station 711+03
Offset 55.20ft Left
Ground Surface Elev. 577.10 ft

Surface Water Elev. n/a ft
Stream Bed Elev. n/a ft
Groundwater Elev.:
First Encounter 561.1 ft ▼
Upon Completion 574.1 ft ▽
After ___ Hrs. ___ ft

Description	DEPTH (ft)	BLOWS (/6")	UCS Qu (tsf)	MOIST (%)
CLAY LOAM-brown & gray-very stiff (Fill) *(continued)*				
535.10				
SAND, GRAVEL & FRACTURED ROCK-gray-dense to very dense				
		50/4"		
				18
	-45			
		10		
		23		8
	-50	29		
		13		
		15		6
	-55	20		
		10		
		18		11
	-60	25		
SAND, GRAVEL & FRACTURED ROCK-gray-dense to very dense *(continued)*		46		
		50/3"		8
	-65			
510.10				
FRACTURED ROCK-gray-medium dense		4		
		5		24
	-70	6		
505.10				
CLAY-medium stiff		3		
		2	0.9	44
	-75	2	B	
		1		
		2	0.6	38
	-80	2	B	

The Unconfined Compressive Strength (UCS) Failure Mode is indicated by (B-Bulge, S-Shear, P-Penetrometer)
The SPT (N value) is the sum of the last two blow values in each sampling zone (AASHTO T206)

BBS, from 137 (Rev. 8-99)

Z:\PROJECTS\2013\1125 HNTB, I-80 PHASE II (NEAR TERM)\13125 BORING LOGS\13125_LOG.GPJ 6/10/14

Geo Services, Inc.
Geotechnical, Environmental & Civil Engineering
805 Amherst Court, Suite 204
Naperville, Illinois 60565
(630) 355-2888

SOIL BORING LOG

GSI Job No. 13125
Page 3 of 3
Date 3/11/14

ROUTE F.A.I RTE. 80 DESCRIPTION I-80 Phase II (Near Term) LOGGED BY NW
SECTION LOCATION SW 1/4, SEC. 15, TWP. T35N, RNG. R10E, 3rd PM
COUNTY Will DRILLING METHOD Hollow Stem Auger/Rotary HAMMER TYPE CME Automatic

STRUCT. NO.
Station
BORING NO. BSB-01
Station 711+03
Offset 55.20ft Left
Ground Surface Elev. 577.10 ft

Surface Water Elev. n/a ft
Stream Bed Elev. n/a ft
Groundwater Elev.:
First Encounter 561.1 ft ▼
Upon Completion 574.1 ft ▽
After ___ Hrs. ___ ft

Description	DEPTH (ft)	BLOWS (/6")	UCS Qu (tsf)	MOIST (%)
CLAY-medium stiff *(continued)*				
495.10				
Cobbles, Boulders & Fractured Rock				
	-85			
487.80				
SILTY CLAY with Fractured Rock	-90			
486.10				
Clayey SAND, GRAVEL & FRACTURED ROCK				
485.10				
End Of Boring @ -92.0'. Boring backfilled with cuttings.				
	-95			
	-100			

The Unconfined Compressive Strength (UCS) Failure Mode is indicated by (B-Bulge, S-Shear, P-Penetrometer)
The SPT (N value) is the sum of the last two blow values in each sampling zone (AASHTO T206)

BBS, from 137 (Rev. 8-99)

Z:\PROJECTS\2013\1125 HNTB, I-80 PHASE II (NEAR TERM)\13125 BORING LOGS\13125_LOG.GPJ 6/10/14

Notes:
1. For location of soil boring, see Sheet SA-1.

MODEL: SHEET
FILE NAME: C:\TRANSYSTEMS\PW_LOCAL\TRANSYSTEMS-PW-01\DMS20864\0990902_0903-62F94-094-BORING1.DGN

HNTB

USER NAME =	DESIGNED - MVV	REVISED -	
	CHECKED - APC	REVISED -	
PLOT SCALE =	DRAWN - LK	REVISED -	
PLOT DATE =	CHECKED - MVV	REVISED -	

STATE OF ILLINOIS
DEPARTMENT OF TRANSPORTATION

SOIL BORING LOGS 1
STRUCTURE NOS. 099-0902 (EB) & 099-0903 (WB)
SHEET SA-93 OF SA-112 SHEETS

F.A.I. RTE.	SECTION	COUNTY	TOTAL SHEETS	SHEET NO.
80	2017-057F	WILL	1342	757
		CONTRACT NO. 62F94		
		ILLINOIS	FED. AID PROJECT	

10-27-2025, 16:50:55

Geo Services, Inc.
Geotechnical, Environmental & Civil Engineering
805 Amherst Court, Suite 204
Naperville, Illinois 60565
(630) 355-2838

ROCK CORE LOG

PAGE 1 of 1
DATE 3/11/2014
LOGGED BY JK
GSI JOB No. 13125

ROUTE -- DESCRIPTION I-80 Reconstruction (Near Term Phase 2)
SECTION -- LOCATION SEC 15, T35N, R10E, SW 1/4, 3rd PM
COUNTY Will CORING METHOD Rotary Wash
STRUCT. NO. -- CORING BARREL TYPE & SIZE NX Double Swivel-10 ft
Station --
Core Diameter 2.0 in
Top of Rock Elev. n/a
BORING NO. BSB-01
Station 711+03
Offset 55.2' Left
Begin Core Elev. n/a
Ground Surface Elev. 577.1

DEPTH (ft)	CORE RUN (#)	RECOVERY (%)	R.Q.D. (%)	CORE TIME (min/ft)	STRENGTH (tsf)
RUN 1 (-84.0' to -92.0') (-84.0' to -89.3') Cobbles, boulders & fractured rock. (-89.3' to -91.0') Silty Clay with fractured rock. (-91.0' to -92.0') Clayey sand, gravel & fractured rock.	1	95.0	n/a	n/a	n/a
-89					
-92					

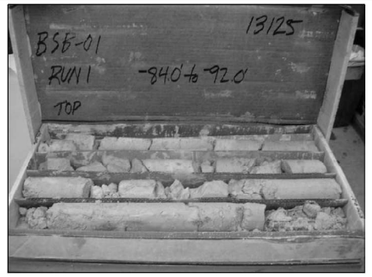

Color pictures of the cores Yes Cores will be stored for examination for --
The "Strength" column represents the uniaxial compressive strength of the core sample (ASTM D-2938)

Geo Services, Inc.
Geotechnical, Environmental & Civil Engineering
805 Amherst Court, Suite 204
Naperville, Illinois 60565
(630) 355-2838

SOIL BORING LOG

GSI Job No. 13125
Page 1 of 2
Date 4/4/14

ROUTE F.A.I RTE. 80 DESCRIPTION I-80 Phase II (Near Term) LOGGED BY NW
SECTION 2013-008B & 2013-009B LOCATION SW 1/4, SEC. 15, TWP. T35N, RNG. R10E, 3rd PM
COUNTY Will DRILLING METHOD Hollow Stem Auger/Rotary HAMMER TYPE CME Automatic

STRUCT. NO.
Station
BORING NO. BSB-01A
Station 710+93
Offset 55.20ft Left
Ground Surface Elev. 577.10 ft

Surface Water Elev. n/a ft
Stream Bed Elev. n/a ft
Groundwater Elev.:
First Encounter n/a ft
Upon Completion n/a ft
After Hrs. ft

DEPTH (ft)	BLOWS (/6")	UCS Qu (tsf)	MOIST (%)
4.5" ASPHALT, 15.0" CONCRETE			
575.48			
Blind Drill			
-5			
-10			
-15			
-20			

DEPTH (ft)	BLOWS (/6")	UCS Qu (tsf)	MOIST (%)
Blind Drill *(continued)*			
-25			
-30			
-35			
-40			

The Unconfined Compressive Strength (UCS) Failure Mode is indicated by (B-Bulge, S-Shear, P-Penetrometer)
The SPT (N value) is the sum of the last two blow values in each sampling zone (AASHTO T206)

BBS, from 137 (Rev. 8-99)

Z:\PROJECTS\2013\125 I-NTB, I-80 PHASE II (NEAR TERM)\13125 BORING LOGS\13125_LOG.GPJ 4/29/15

Geo Services, Inc.
Geotechnical, Environmental & Civil Engineering
805 Amherst Court, Suite 204
Naperville, Illinois 60565
(630) 355-2838

SOIL BORING LOG

GSI Job No. 13125
Page 2 of 2
Date 4/4/14

ROUTE F.A.I RTE. 80 DESCRIPTION I-80 Phase II (Near Term) LOGGED BY NW
SECTION 2013-008B & 2013-009B LOCATION SW 1/4, SEC. 15, TWP. T35N, RNG. R10E, 3rd PM
COUNTY Will DRILLING METHOD Hollow Stem Auger/Rotary HAMMER TYPE CME Automatic

STRUCT. NO.
Station
BORING NO. BSB-01A
Station 710+93
Offset 55.20ft Left
Ground Surface Elev. 577.10 ft

Surface Water Elev. n/a ft
Stream Bed Elev. n/a ft
Groundwater Elev.:
First Encounter n/a ft
Upon Completion n/a ft
After Hrs. ft

DEPTH (ft)	BLOWS (/6")	UCS Qu (tsf)	MOIST (%)
Blind Drill *(continued)*			
Drillers Note: Rough drilling from -41.0' to -64.0'			
-45			
-50			
-55			
-60			

DEPTH (ft)	BLOWS (/6")	UCS Qu (tsf)	MOIST (%)
Blind Drill *(continued)*			
Drillers Observation: Apparent bedrock			
-65			
509.10			
Borehole continued with rock coring.			
-70			
-75			
-80			

The Unconfined Compressive Strength (UCS) Failure Mode is indicated by (B-Bulge, S-Shear, P-Penetrometer)
The SPT (N value) is the sum of the last two blow values in each sampling zone (AASHTO T206)

BBS, from 137 (Rev. 8-99)

Z:\PROJECTS\2013\125 I-NTB, I-80 PHASE II (NEAR TERM)\13125 BORING LOGS\13125_LOG.GPJ 4/29/15

Notes:
1. For location of soil boring, see Sheet SA-1.

MODEL: SHEET
FILE NAME: C:\TRANSYSTEMS\PW_LOCAL\TRANSYSTEMS-PW-01\DMS20864\0990902_0903-62F94-095-BORING2.DGN

HNTB

USER NAME =	DESIGNED - MVV	REVISED -	
	CHECKED - APC	REVISED -	
PLOT SCALE =	DRAWN - LK	REVISED -	
PLOT DATE =	CHECKED - MVV	REVISED -	

STATE OF ILLINOIS
DEPARTMENT OF TRANSPORTATION

SOIL BORING LOGS 2
STRUCTURE NOS. 099-0902 (EB) & 099-0903 (WB)
SHEET SA-94 OF SA-112 SHEETS

F.A.I. RTE.	SECTION	COUNTY	TOTAL SHEETS	SHEET NO.
80	2017-057F	WILL	1342	758
		CONTRACT NO. 62F94		
	ILLINOIS	FED. AID PROJECT		

10-27-2025, 16:50:59

Geo Services, Inc.
Geotechnical, Environmental & Civil Engineering
805 Amherst Court, Suite 204
Naperville, Illinois 60565
(630) 355-2638

ROCK CORE LOG

GSI Job No. 13125
Page 1 of 2
Date 4/4/14

ROUTE F.A.I RTE. 80 DESCRIPTION I-80 Phase II (Near Term) LOGGED BY NW
SECTION 2013-008B & 2013-009B LOCATION SW 1/4, SEC. 15, TWP. T35N, RNG. R10E, 3rd PM
COUNTY Will CORING METHOD Rotary Wash
STRUCT. NO. ____ CORING BARREL TYPE & SIZE NX Double Swivel-10 ft
Station ____ Core Diameter 2 in
BORING NO. BSB-01A Top of Rock Elev. 513.10 ft
Station 710+93 Begin Core Elev. 510.40 ft
Offset 55.20ft Left
Ground Surface Elev. 577.10 ft

	DEPTH (ft)	CORE (#)	RECOVERY (%)	R.Q.D. (%)	CORE TIME (min/ft)	STRENGTH (tsf)
SILURIAN SYSTEM, NIAGARAN SERIES DOLOMITE - Run 1 (509.10) Light gray & porous with horizontal bedding. Highly fractured & weathered from -71.2' to -78.0' with numerous intersecting horizontal & vertical fractures.	-70, -75	1	100	40		950.0
SILURIAN SYSTEM, NIAGARAN SERIES DOLOMITE Run 2 (499.10) Light gray & porous with horizontal bedding. Highly fractured & weathered throughout with numerous intersecting horizontal & vertical fractures. Numerous clay seams throughout.	-80, -85	2	22	0		
(490.10)		3	97	18		

Color pictures of the cores Yes
Cores will be stored for examination until 5 yrs after const.
The "Strength" column represents the uniaxial compressive strength of the core sample (ASTM D-2938)

BBS, form 138 (Rev. 8-99)

Geo Services, Inc.
Geotechnical, Environmental & Civil Engineering
805 Amherst Court, Suite 204
Naperville, Illinois 60565
(630) 355-2638

ROCK CORE LOG

GSI Job No. 13125
Page 2 of 2
Date 4/4/14

ROUTE F.A.I RTE. 80 DESCRIPTION I-80 Phase II (Near Term) LOGGED BY NW
SECTION 2013-008B & 2013-009B LOCATION SW 1/4, SEC. 15, TWP. T35N, RNG. R10E, 3rd PM
COUNTY Will CORING METHOD Rotary Wash
STRUCT. NO. ____ CORING BARREL TYPE & SIZE NX Double Swivel-10 ft
Station ____ Core Diameter 2 in
BORING NO. BSB-01A Top of Rock Elev. 513.10 ft
Station 710+93 Begin Core Elev. 510.40 ft
Offset 55.20ft Left
Ground Surface Elev. 577.10 ft

	DEPTH (ft)	CORE (#)	RECOVERY (%)	R.Q.D. (%)	CORE TIME (min/ft)	STRENGTH (tsf)
SILURIAN SYSTEM, NIAGARAN SERIES DOLOMITE - Run 3 Light gray & porous with horizontal bedding. Weathered & fractured throughout becoming highly weathered & fractured with clay seams from -93.5' to -95.0'. *(continued)*	-90, -95					845.0
SILURIAN SYSTEM, NIAGARAN SERIES DOLOMITE - Run 4 (482.10) Light gray & porous. Highly weathered & fractured throughout with some thin clay partings & chert nodules.		4	100	0		
End Of Boring @ -98.0'. Boring backfilled with cuttings. (479.10)	-100, -105					

Color pictures of the cores Yes
Cores will be stored for examination until 5 yrs after const.
The "Strength" column represents the uniaxial compressive strength of the core sample (ASTM D-2938)

BBS, form 138 (Rev. 8-99)

Geo Services, Inc.
Geotechnical, Environmental & Civil Engineering
805 Amherst Court, Suite 204
Naperville, Illinois 60565
(630) 355-2638

ROCK CORE LOG

PAGE 1 of 3
DATE 4/5/2014
LOGGED BY JK
GSI JOB No. 13125

ROUTE -- DESCRIPTION I-80 Reconstruction (Near Term Phase 2)
SECTION -- LOCATION SEC 15, T35N, R10E, SW 1/4, 3rd PM
COUNTY Will CORING METHOD Rotary Wash
STRUCT. NO. -- CORING BARREL TYPE & SIZE NX Double Swivel-10 ft
Station -- Core Diameter 2.0 in
BORING NO. BSB-01A Top of Rock Elev. 513.1
Station 710+93 Begin Core Elev. 509.1
Offset 55.2' Left
Ground Surface Elev. 577.1

	DEPTH (ft)	CORE RUN (#)	RECOVERY (%)	R.Q.D. (%)	CORE TIME (min/ft)	STRENGTH (tsf)
SILURIAN SYSTEM, NIAGARAN SERIES DOLOMITE RUN 1 (-68.0' to -78.0') Light gray & porous with horizontal bedding. Highly fractured & weathered from -71.2' to -78.0' with numerous intersecting horizontal & vertical fractures.	-73, -78	1	100.0	40.0	n/a	950 @ -68.1'

Color pictures of the cores Yes Cores will be stored for examination for --
The "Strength" column represents the uniaxial compressive strength of the core sample (ASTM D-2938)

Notes:
1. For location of soil boring, see Sheet SA-1.

MODEL: SHEET
FILE NAME: C:\TRANSYSTEMS\PW_LOCAL\TRANSYSTEMS-PW-01\DMS20864\09090902_0903-62F94-096-BORING3.DGN
10-27-2025, 16:51:04

HNTB

USER NAME =	DESIGNED - MVV	REVISED -	
	CHECKED - APC	REVISED -	
PLOT SCALE =	DRAWN - LK	REVISED -	
PLOT DATE =	CHECKED - MVV	REVISED -	

STATE OF ILLINOIS
DEPARTMENT OF TRANSPORTATION

SOIL BORING LOGS 3
STRUCTURE NOS. 099-0902 (EB) & 099-0903 (WB)
SHEET SA-95 OF SA-112 SHEETS

F.A.I. RTE.	SECTION	COUNTY	TOTAL SHEETS	SHEET NO.
80	2017-057F	WILL	1342	759
		CONTRACT NO. 62F94		
	ILLINOIS	FED. AID PROJECT		

Geo Services, Inc.
Geotechnical, Environmental & Civil Engineering
805 Amherst Court, Suite 204
Naperville, Illinois 60565
(630) 355-2838

ROCK CORE LOG

PAGE 2 of 3
DATE 4/5/2014
LOGGED BY JK
GSI JOB No. 13125

ROUTE --
DESCRIPTION I-80 Reconstruction (Near Term Phase 2)
SECTION --
LOCATION SEC 15, T35N, R10E, SW 1/4, 3rd PM
COUNTY Will
CORING METHOD Rotary Wash
STRUCT. NO. --
Station --
CORING BARREL TYPE & SIZE NX Double Swivel-10 ft
Core Diameter 2.0 in
BORING NO. BSB-01A
Top of Rock Elev. 513.1
Station 710+93
Begin Core Elev. 509.1
Offset 55.2' Left
Ground Surface Elev. 577.1

	DEPTH (ft)	CORE RUN (#)	RECOVERY (%)	R.Q.D. (%)	CORE TIME (min/ft)	STRENGTH (tsf)
SILURIAN SYSTEM, NIAGARAN SERIES DOLOMITE RUN 2 (-78.0' to -87.0') Light gray & porous with horizontal bedding. Highly fractured & weathered throughout with numerous intersecting horizontal & vertical fractures. Numerous clay seams throughout. Poor core recovery due to loss of drilling fluid.	-83 -87	2	44.0	0.0	n/a	n/a

Color pictures of the cores Yes Cores will be stored for examination for --
The "Strength" column represents the uniaxial compressive strength of the core sample (ASTM D-2938)

Geo Services, Inc.
Geotechnical, Environmental & Civil Engineering
805 Amherst Court, Suite 204
Naperville, Illinois 60565
(630) 355-2838

ROCK CORE LOG

PAGE 3 of 3
DATE 4/5/2014
LOGGED BY JK
GSI JOB No. 13125

ROUTE --
DESCRIPTION I-80 Reconstruction (Near Term Phase 2)
SECTION --
LOCATION SEC 15, T35N, R10E, SW 1/4, 3rd PM
COUNTY Will
CORING METHOD Rotary Wash
STRUCT. NO. --
Station --
CORING BARREL TYPE & SIZE NX Double Swivel-10 ft
Core Diameter 2.0 in
BORING NO. BSB-01A
Top of Rock Elev. 513.1
Station 710+93
Begin Core Elev. 509.1
Offset 55.2' Left
Ground Surface Elev. 577.1

	DEPTH (ft)	CORE RUN (#)	RECOVERY (%)	R.Q.D. (%)	CORE TIME (min/ft)	STRENGTH (tsf)
SILURIAN SYSTEM, NIAGARAN SERIES DOLOMITE RUN 3 (-87.0' to -95.0') Light gray & porous with horizontal bedding. Weathered & fractured throughout becoming highly weathered & fractured with clay seams from -93.5' to -95.0'.	-92 -95	3	97.0	18.0	n/a	845 @ -88.0'
SILURIAN SYSTEM, NIAGARAN SERIES DOLOMITE RUN 4 (-95.0' to -98.0') Light gray & porous. Highly weathered & fractured throughout with some thin clay partings & chert nodules.		4	100.0	0.0	n/a	n/a

Color pictures of the cores Yes Cores will be stored for examination for --
The "Strength" column represents the uniaxial compressive strength of the core sample (ASTM D-2938)

Geo Services, Inc.
Geotechnical, Environmental & Civil Engineering
805 Amherst Court, Suite 204
Naperville, Illinois 60565
(630) 355-2838

SOIL BORING LOG

GSI Job No. 13125
Page 1 of 2
Date 5/15/14

ROUTE F.A.I RTE. 80 DESCRIPTION I-80 Phase II (Near Term) LOGGED BY MD
SECTION LOCATION SW 1/4, SEC. 15, TWP. T35N, RNG. R10E, 3rd PM
COUNTY Will DRILLING METHOD Mud Rotary HAMMER TYPE CME Automatic

STRUCT. NO.
Station
BORING NO. BSB-03
Station 711+86
Offset 23.00ft Left
Ground Surface Elev. 577.20 ft

Surface Water Elev. n/a ft
Stream Bed Elev. n/a ft
Groundwater Elev.:
First Encounter n/a ft
Upon Completion n/a ft
After ___ Hrs. ___ ft

	DEPTH (ft)	BLOWS (/6")	UCS Qu (tsf)	MOIST (%)
3.25" ASPHALT, 7.0" CONCRETE BRIDGE DECK 576.35 VOID	-5 -10 -15 -20			

	DEPTH (ft)	BLOWS (/6")	UCS Qu (tsf)	MOIST (%)
VOID *(continued)*	-25 548.20			
CLAY LOAM-brown & gray-medium stiff to stiff (Fill)	-30 -35 -40	2 7 2 3 6 12 2 3 4		

The Unconfined Compressive Strength (UCS) Failure Mode is indicated by (B-Bulge, S-Shear, P-Penetrometer)
The SPT (N value) is the sum of the last two blow values in each sampling zone (AASHTO T206)

BBS, from 137 (Rev. 8-99)

Z:\PROJECTS\2013\13125 FNTB, I80 PHASE II (NEAR TERM)\13125 BORING LOGS\13125_LOG.GPJ 6/10/14

Notes:
1. For location of soil boring, see Sheet SA-1.

MODEL: SHEET
FILE NAME: C:\TRANSYSTEMS\PW_LOCAL\TRANSYSTEMS-PW-01\DMS20864\0990902_0903-62F94-097-BORING4.DGN

HNTB

USER NAME =	DESIGNED - MVV	REVISED -	
	CHECKED - APC	REVISED -	
PLOT SCALE =	DRAWN - LK	REVISED -	
PLOT DATE =	CHECKED - MVV	REVISED -	

STATE OF ILLINOIS
DEPARTMENT OF TRANSPORTATION

SOIL BORING LOGS 4
STRUCTURE NOS. 099-0902 (EB) & 099-0903 (WB)
SHEET SA-96 OF SA-112 SHEETS

F.A.I. RTE.	SECTION	COUNTY	TOTAL SHEETS	SHEET NO.
80	2017-057F	WILL	1342	760
		CONTRACT NO. 62F94		
	ILLINOIS	FED. AID PROJECT		

10-27-2025, 16:51:08

Geo Services, Inc.
Geotechnical, Environmental & Civil Engineering
805 Amherst Court, Suite 204
Naperville, Illinois 60565
(630) 355-2838

SOIL BORING LOG

GSI Job No. 13125
Page 2 of 2
Date 5/15/14

ROUTE F.A.I RTE. 80 DESCRIPTION I-80 Phase II (Near Term) LOGGED BY MD
SECTION LOCATION SW 1/4, SEC. 15, TWP. T35N, RNG. R10E, 3rd PM
COUNTY Will DRILLING METHOD Mud Rotary HAMMER TYPE CME Automatic

STRUCT. NO.
Station

BORING NO. BSB-03
Station 711+86
Offset 23.00ft Left
Ground Surface Elev. 577.20 ft

Surface Water Elev. n/a ft
Stream Bed Elev. n/a ft

Groundwater Elev.:
First Encounter n/a ft
Upon Completion n/a ft
After ___ Hrs. ___ ft

Description	Elev.	DEPTH (ft)	BLOWS (/6")	UCS Qu (tsf)	MOIST (%)
CLAY LOAM-brown & gray-medium stiff to stiff (Fill) *(continued)*					
	535.20				
FRACTURED ROCK-brown-dense to very dense					
			15		
			16		
		-45	18		
			19		
			23		
		-50	51		
			19		
			35		
		-55	37		
			26		
			20		
		-60	20		
FRACTURED ROCK-brown-dense to very dense *(continued)*					
			22		
			36		
		-65	35		
	508.70				
SILTY CLAY-gray-very dense			16		
			25		
		-70	37		
	500.70				
Drillers Observation: Apparent bedrock	505.20				
Borehole continued with rock coring.					
		-75			
		-80			

The Unconfined Compressive Strength (UCS) Failure Mode is indicated by (B-Bulge, S-Shear, P-Penetrometer)
The SPT (N value) is the sum of the last two blow values in each sampling zone (AASHTO T206)

BBS, from 137 (Rev. 8-99)

Z:\PROJECTS\2013\13125 HNTB_I-80 PHASE II (NEAR TERM)\13125 BORING LOGS\13125_LOG.GPJ 6/19/14

Geo Services, Inc.
Geotechnical, Environmental & Civil Engineering
805 Amherst Court, Suite 204
Naperville, Illinois 60565
(630) 355-2838

ROCK CORE LOG

PAGE 1 of 1
DATE 5/15/2014
LOGGED BY JK
GSI JOB No. 13125

ROUTE --
SECTION --
COUNTY Will
STRUCT. NO. --
Station --

BORING NO. BSB-03
Station 711+69
Offset 23.0' Left
Ground Surface Elev. 577.2

DESCRIPTION I-80 Reconstruction (Near Term Phase 2)
LOCATION --
CORING METHOD Rotary Wash
CORING BARREL TYPE & SIZE NX Double Swivel-10 ft
Core Diameter 2.0 in
Top of Rock Elev. 505.7
Begin Core Elev. 505.2

Description	DEPTH (ft)	CORE RUN (#)	RECOVERY (%)	R.Q.D. (%)	CORE TIME (min/ft)	STRENGTH (tsf)
SILURIAN SYSTEM, NIAGARAN SERIES DOLOMITE RUN 1 (-72.0' to -82.0') Light gray & porous with rust staining. Weathered with horizontal bedding. Vertical fractures from -72.0' to -73.9', -75.2' to -75.5' & from -76.6' to -77.5'. Some horizontal fractures throughout.	-77 -82	1	100.0	52.0	n/a	639 @ -74.6'

Color pictures of the cores Yes ___ Cores will be stored for examination for --
The "Strength" column represents the unioxial compressive strength of the core sample (ASTM D-2938)

Geo Services, Inc.
Geotechnical, Environmental & Civil Engineering
805 Amherst Court, Suite 204
Naperville, Illinois 60565
(630) 355-2838

SOIL BORING LOG

GSI Job No. 13125
Page 1 of 1
Date 10/24/13

ROUTE F.A.I RTE. 80 DESCRIPTION I-80 Phase II (Near Term) LOGGED BY TZ
SECTION LOCATION SW 1/4, SEC. 15, TWP. T35N, RNG. R10E, 3rd PM
COUNTY Will DRILLING METHOD Hollow Stem Auger/Rotary HAMMER TYPE CME Automatic

STRUCT. NO.
Station

BORING NO. BSB-05
Station 712+72
Offset 65.30ft Left
Ground Surface Elev. 544.30 ft

Surface Water Elev. n/a ft
Stream Bed Elev. n/a ft

Groundwater Elev.:
First Encounter 525.8 ft ▼
Upon Completion Dry ft
After ___ Hrs. ___ ft

Description	Elev.	DEPTH (ft)	BLOWS (/6")	UCS Qu (tsf)	MOIST (%)
SAND & GRAVEL-dark dray (Fill)					
	543.30				
SAND, GRAVEL & FRACTURE ROCK-brown & gray-medium dense to very dense			9		
			9		10
			10		
			5		
			7		4
		-5	8		
			7		
			9		7
			11		
			6		
			17		6
		-10	12		
			15		
			17		2
			11		
			11		
			14		2
		-15	15		
			7		
			8		8
			12		
			13		
			15		5
		-20	24		
SAND, GRAVEL & FRACTURE ROCK-brown & gray-medium dense to very dense *(continued)*					
			11		
			16		21
			19		
			15		
			43		5
		-25	21		
			25		
			27		10
			31		
			50/3"		
					5
		-30			
	512.80				
Borehole continued with rock coring.					
		-35			
		-40			

The Unconfined Compressive Strength (UCS) Failure Mode is indicated by (B-Bulge, S-Shear, P-Penetrometer)
The SPT (N value) is the sum of the last two blow values in each sampling zone (AASHTO T206)

BBS, from 137 (Rev. 8-99)

Z:\PROJECTS\2013\13125 HNTB_I-80 PHASE II (NEAR TERM)\13125 BORING LOGS\13125_LOG.GPJ 6/11/14

Notes:
1. For location of soil boring, see Sheet SA-1.

MODEL: SHEET
FILE NAME: C:\TRANSYSTEMS\PW_LOCAL\TRANSYSTEMS-PW-01\DMS20864\09990902_0903-62F94-098-BORINGS.DGN

HNTB

USER NAME =	DESIGNED - MVV	REVISED -	
	CHECKED - APC	REVISED -	
PLOT SCALE =	DRAWN - LK	REVISED -	
PLOT DATE =	CHECKED - MVV	REVISED -	

STATE OF ILLINOIS
DEPARTMENT OF TRANSPORTATION

SOIL BORING LOGS 5
STRUCTURE NOS. 099-0902 (EB) & 099-0903 (WB)
SHEET SA-97 OF SA-112 SHEETS

F.A.I. RTE.	SECTION	COUNTY	TOTAL SHEETS	SHEET NO.
80	2017-057F	WILL	1342	761
		CONTRACT NO. 62F94		
	ILLINOIS	FED. AID PROJECT		

10-27-2025, 16:51:12

Geo Services, Inc.
Geotechnical, Environmental & Civil Engineering
805 Amherst Court, Suite 204
Naperville, Illinois 60565
(630) 355-2838

ROCK CORE LOG

PAGE 1 of 1
DATE 10/24/2013
LOGGED BY JK
GSI JOB No. 13125

ROUTE --
DESCRIPTION I-80 Reconstruction (Near Term Phase 2)
SECTION --
LOCATION SEC 15, T35N, R10E, SW 1/4, 3rd PM
COUNTY Will
CORING METHOD Rotary Wash
STRUCT. NO. --
Station --
CORING BARREL TYPE & SIZE NX Double Swivel-10 ft
Core Diameter 2.0 in
Top of Rock Elev. 512.8
Begin Core Elev. 512.8
BORING NO. BSB-05
Station 712+72
Offset 65.3' Left
Ground Surface Elev. 544.3

DEPTH (ft)	CORE RUN (#)	RECOVERY (%)	R.Q.D. (%)	CORE TIME (min/ft)	STRENGTH (tsf)
	1	100.0	58.0	n/a	1038 ● -32.5'
-36.5					
-41.5					

SILURIAN SYSTEM, NIAGARAN SERIES DOLOMITE
RUN 1 (-31.5' to -41.5')
Light gray & fine grained with horizontal bedding. Numerous horizontal fractures to -39.5'. Vertical fractures with intersecting horizontal fractures from -34.9' to -36.1' & from -38.7' to -39.5'.

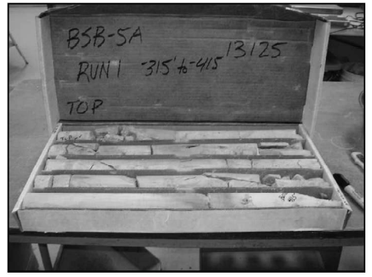

Color pictures of the cores Yes Cores will be stored for examination for --
The "Strength" column represents the unlaxial compressive strength of the core sample (ASTM D-2938)

Geo Services, Inc.
Geotechnical, Environmental & Civil Engineering
805 Amherst Court, Suite 204
Naperville, Illinois 60565
(630) 355-2838

SOIL BORING LOG

GSI Job No. 13125
Page 1 of 1
Date 10/22/13

ROUTE F.A.I RTE. 80
DESCRIPTION I-80 Phase II (Near Term)
LOGGED BY TZ
SECTION
LOCATION SW 1/4, SEC. 15, TWP. T35N, RNG. R10E, 3rd PM
COUNTY Will
DRILLING METHOD Hollow Stem Auger/Rotary
HAMMER TYPE CME Automatic

STRUCT. NO.
Station
BORING NO. BSB-07
Station 713+13
Offset 11.20ft Left
Ground Surface Elev. 532.70 ft

Surface Water Elev. n/a ft
Stream Bed Elev. n/a ft
Groundwater Elev.:
First Encounter Dry to 10.0' ft
Upon Completion n/a ft
After Hrs. ft

Description	Elev.	DEPTH (ft)	BLOWS (/6")	UCS Qu (tsf)	MOIST (%)
SILTY SAND & STONE-black (FILL)	531.70				
SAND, GRAVEL & FRACTURE ROCK-brown & gray-medium dense to very dense			12		
			16		8
			6		
			11		
			11		9
		-5	16		
			13		
			11		9
			12		
			12		
			9		7
		-10	9		
			20		
			50/2"		10
			23		
			11		8
		-15	12		
			23		
			30		9
			26		
			50/2"		7
Borehole continued with rock coring.	513.70	-20			

The Unconfined Compressive Strength (UCS) Failure Mode is indicated by (B-Bulge, S-Shear, P-Penetrometer)
The SPT (N value) is the sum of the last two blow values in each sampling zone (AASHTO T206)

BBS, from 137 (Rev. 8-99)

Z:\PROJECTS\2013\13125 I-NTB, I-80 PHASE II (NEAR TERM)\13125 BORING LOGS\ 13125_LOG.GPJ 6/10/14

Geo Services, Inc.
Geotechnical, Environmental & Civil Engineering
805 Amherst Court, Suite 204
Naperville, Illinois 60565
(630) 355-2838

ROCK CORE LOG

PAGE 1 of 1
DATE 10/22/2013
LOGGED BY JK
GSI JOB No. 13125

ROUTE --
DESCRIPTION I-80 Reconstruction (Near Term Phase 2)
SECTION --
LOCATION SEC 15, T35N, R10E, SW 1/4, 3rd PM
COUNTY Will
CORING METHOD Rotary Wash
STRUCT. NO. --
Station --
CORING BARREL TYPE & SIZE NX Double Swivel-10 ft
Core Diameter 2.0 in
Top of Rock Elev. 513.7
Begin Core Elev. 513.7
BORING NO. BSB-07
Station 713+13
Offset 11.2' Left
Ground Surface Elev. 532.7

DEPTH (ft)	CORE RUN (#)	RECOVERY (%)	R.Q.D. (%)	CORE TIME (min/ft)	STRENGTH (tsf)
	1	100.0	21.0	n/a	1088 ● -19.5'
-24					
-29					

SILURIAN SYSTEM, NIAGARAN SERIES DOLOMITE
RUN 1 (-19.0' to -29.0')
Light gray to gray & cherty with horizontal bedding. Highly fractured & weathered throughout with clay seams from -23.5' to -23.8' & from -24.8' to -26.5'.

Color pictures of the cores Yes Cores will be stored for examination for --
The "Strength" column represents the unlaxial compressive strength of the core sample (ASTM D-2938)

Notes:
1. For location of soil boring, see Sheet SA-1.

MODEL: SHEET
FILE NAME: C:\TRANSYSTEMS\PW_LOCAL\TRANSYSTEMS-PW-01\DMS20864\0990902_0903-62F94-099-BORING6.DGN

HNTB

USER NAME =	DESIGNED - MVV	REVISED -	
	CHECKED - APC	REVISED -	
PLOT SCALE =	DRAWN - LK	REVISED -	
PLOT DATE =	CHECKED - MVV	REVISED -	

STATE OF ILLINOIS
DEPARTMENT OF TRANSPORTATION

SOIL BORING LOGS 6
STRUCTURE NOS. 099-0902 (EB) & 099-0903 (WB)
SHEET SA-98 OF SA-112 SHEETS

F.A.I. RTE.	SECTION	COUNTY	TOTAL SHEETS	SHEET NO.
80	2017-057F	WILL	1342	762
		CONTRACT NO. 62F94		
	ILLINOIS	FED. AID PROJECT		

10-27-2025, 16:51:16

Geo Services, Inc.
Geotechnical, Environmental & Civil Engineering
805 Amherst Court, Suite 204
Naperville, Illinois 60565
(630) 355-2838

SOIL BORING LOG

GSI Job No. 13125
Page 1 of 1
Date 10/23/13

ROUTE F.A.I RTE. 80 DESCRIPTION I-80 Phase II (Near Term) LOGGED BY TZ
SECTION LOCATION SW 1/4, SEC. 15, TWP. T35N, RNG. R10E, 3rd PM
COUNTY Will DRILLING METHOD Hollow Stem Auger/Rotary HAMMER TYPE CME Automatic

STRUCT. NO.
Station
BORING NO. BSB-09
Station 713+77
Offset 66.20ft Left
Ground Surface Elev. 534.70 ft

Surface Water Elev. n/a ft
Stream Bed Elev. n/a ft
Groundwater Elev.:
First Encounter Dry to 24.0' ft
Upon Completion n/a ft
After Hrs. ft

Description	Elev.	DEPTH (ft)	BLOWS (/6")	UCS Qu (tsf)	MOIST (%)
SANDY CLAY LOAM with GRAVEL-brown & black-loose (Fill)					
			2		
			3		19
			3		
	531.70				
SAND, GRAVEL & FRACTURED ROCK-brown & gray-medium dense to very dense					
			6		
		-5	12		6
			14		
			9		
			10		6
			15		
			10		
			14		5
		-10	18		
			23		
			50/3"		24
			11		
			11		10
		-15	18		
			17		
			27		10
			36		
			25		
			32		12
		-20	37		
SAND, GRAVEL & FRACTURED ROCK-brown & gray-medium dense to very dense *(continued)*					
			50/2"		
	512.20				
Drillers Observation: Apparent bedrock	510.70				
Borehole continued with rock coring.		-25			
		-30			
		-35			
		-40			

The Unconfined Compressive Strength (UCS) Failure Mode is indicated by (B-Bulge, S-Shear, P-Penetrometer)
The SPT (N value) is the sum of the last two blow values in each sampling zone (AASHTO T206)

BBS, from 137 (Rev. 8-99)

Z:\PROJECTS\2013\13125 HNTB, I-80 PHASE II (NEAR TERM)\13125 BORING LOGS\13125_LOG.GPJ 6/10/14

Geo Services, Inc.
Geotechnical, Environmental & Civil Engineering
805 Amherst Court, Suite 204
Naperville, Illinois 60565
(630) 355-2838

ROCK CORE LOG

PAGE 1 of 1
DATE 10/23/2013
LOGGED BY JK
GSI JOB No. 13125

ROUTE --
SECTION --
COUNTY Will
STRUCT. NO. --
Station --
BORING NO. BSB-09
Station 713+77
Offset 66.2' Left
Ground Surface Elev. 534.7

DESCRIPTION I-80 Reconstruction (Near Term Phase 2)
LOCATION SEC 15, T35N, R10E, SW 1/4, 3rd PM
CORING METHOD Rotary Wash
CORING BARREL TYPE & SIZE NX Double Swivel-10 ft
Core Diameter 2.0 in
Top of Rock Elev. 512.2
Begin Core Elev. 510.7

Description	Elev.	DEPTH (ft)	CORE RUN (#)	RECOVERY (%)	R.Q.D. (%)	CORE TIME (min/ft)	STRENGTH (tsf)
SILURIAN SYSTEM, NIAGARAN SERIES DOLOMITE RUN 1 (-24.0' to -34.0') Light gray with horizontal to wavy bedding & some chert inclusions. Horizontal fractures at -31.1', -31.2', -31.75' & -32.5'. Highly fractured & weathered from -24.0' to -24.8' & from -28.9' to -30.0'.			1	100.0	43.0	n/a	280 @ -25.4'
		-29					
		-34					

Color pictures of the cores Yes Cores will be stored for examination for --
The "Strength" column represents the unioxial compressive strength of the core sample (ASTM D-2938)

Geo Services, Inc.
Geotechnical, Environmental & Civil Engineering
805 Amherst Court, Suite 204
Naperville, Illinois 60565
(630) 355-2838

SOIL BORING LOG

GSI Job No. 13125
Page 1 of 1
Date 10/30/13

ROUTE F.A.I RTE. 80 DESCRIPTION I-80 Phase II (Near Term) LOGGED BY TZ
SECTION LOCATION SW 1/4, SEC. 15, TWP. T35N, RNG. R10E, 3rd PM
COUNTY Will DRILLING METHOD Hollow Stem Auger/Rotary HAMMER TYPE CME Automatic

STRUCT. NO.
Station
BORING NO. BSB-11
Station 714+35
Offset 6.90ft Left
Ground Surface Elev. 533.10 ft

Surface Water Elev. n/a ft
Stream Bed Elev. n/a ft
Groundwater Elev.:
First Encounter Dry to 13.5' ft
Upon Completion n/a ft
After Hrs. ft

Description	Elev.	DEPTH (ft)	BLOWS (/6")	UCS Qu (tsf)	MOIST (%)
12.0" SANDY TOPSOIL-black					
	532.10				20
CRUSHED STONE, GRAVEL & SAND-dark brown-loose to medium dense (Fill)			10		
			12		14
			9		
			8		
			10		13
		-5	12		
			3		
			4		12
			5		
	525.10				
FRACTURED ROCK-gray-dense to very dense			8		
			18		7
		-10	19		
			19		
			24		6
			20		
			50/4"		
					6
		-15			
Cobbles & Boulders from -16.0' to -17.5'			50/0"		
			37		
			21		7
		-20	24		
	512.60				
FRACTURED ROCK & SHALE-very dense					
			50/5"		
					22
	509.10			50/2"	15
Borehole continued with rock coring.		-25			
		-30			
		-35			
		-40			

The Unconfined Compressive Strength (UCS) Failure Mode is indicated by (B-Bulge, S-Shear, P-Penetrometer)
The SPT (N value) is the sum of the last two blow values in each sampling zone (AASHTO T206)

BBS, from 137 (Rev. 8-99)

Z:\PROJECTS\2013\13125 HNTB, I-80 PHASE II (NEAR TERM)\13125 BORING LOGS\13125_LOG.GPJ 6/10/14

Notes:
1. For location of soil boring, see Sheet SA-1.

MODEL: SHEET
FILE NAME: C:\TRANSYSTEMS\PW_LOCAL\TRANSYSTEMS-PW-01\DM520864\09090902_0903-62F94-100-BORING7.DGN
10-27-2025, 16:51:20

HNTB

USER NAME =	DESIGNED - MVV	REVISED -	
	CHECKED - APC	REVISED -	
PLOT SCALE =	DRAWN - LK	REVISED -	
PLOT DATE =	CHECKED - MVV	REVISED -	

STATE OF ILLINOIS
DEPARTMENT OF TRANSPORTATION

SOIL BORING LOGS 7
STRUCTURE NOS. 099-0902 (EB) & 099-0903 (WB)
SHEET SA-99 OF SA-112 SHEETS

F.A.I. RTE.	SECTION	COUNTY	TOTAL SHEETS	SHEET NO.
80	2017-057F	WILL	1342	763
		CONTRACT NO. 62F94		
	ILLINOIS	FED. AID PROJECT		

Geo Services, Inc.
Geotechnical, Environmental & Civil Engineering
805 Amherst Court, Suite 204
Naperville, Illinois 60565
(630) 355-2838

ROCK CORE LOG

PAGE 1 of 1
DATE 10/30/2013
LOGGED BY JK
GSI JOB No. 13125

ROUTE --
DESCRIPTION I-80 Reconstruction (Near Term Phase 2)
SECTION --
LOCATION SEC 15, T35N, R10E, SW 1/4, 3rd PM
COUNTY Will
CORING METHOD Rotary Wash
STRUCT. NO. --
Station --
CORING BARREL TYPE & SIZE NX Double Swivel-10 ft
Core Diameter 2.0 in
Top of Rock Elev. 509.1
Begin Core Elev. 509.1
BORING NO. BSB-11
Station 714+35
Offset 6.9' Left
Ground Surface Elev. 533.1

DEPTH (ft)	CORE RUN (#)	RECOVERY (%)	R.Q.D. (%)	CORE TIME (min/ft)	STRENGTH (tsf)
	1	100.0	33.0	n/a	434 @ -26.0'
-29					
-34					

SILURIAN SYSTEM, NIAGARAN SERIES DOLOMITE
RUN 1 (-24.0' to -34.0')
Light gray to gray with horizontal to wavy bedding. Highly weathered & fractured with clay partings & some chert nodules from -24.0' to -29.7'.

Color pictures of the cores Yes Cores will be stored for examination for --
The "Strength" column represents the uniaxial compressive strength of the core sample (ASTM D-2938)

Geo Services, Inc.
Geotechnical, Environmental & Civil Engineering
805 Amherst Court, Suite 204
Naperville, Illinois 60565
(630) 355-2838

SOIL BORING LOG

GSI Job No. 13125
Page 1 of 1
Date 10/20/13

ROUTE F.A.I RTE. 80
DESCRIPTION I-80 Phase II (Near Term)
LOGGED BY TZ
SECTION
LOCATION SW 1/4, SEC. 15, TWP. T35N, RNG. R10E, 3rd PM
COUNTY Will
DRILLING METHOD Hollow Stem Auger/Rotary
HAMMER TYPE CME Automatic

STRUCT. NO.
Station
BORING NO. BSB-13
Station 715+06
Offset 67.30ft Left
Ground Surface Elev. 533.60 ft

Surface Water Elev. n/a ft
Stream Bed Elev. n/a ft
Groundwater Elev.:
First Encounter 518.6 ft ▼
Upon Completion n/a ft
After Hrs. ft

DEPTH (ft)	BLOWS (/6")	UCS Qu (tsf)	MOIST (%)
533.27 4.0" CONCRETE			
532.60 8.0" CRUSHED STONE			
SAND, CINDERS & STONE-medium dense (Fill)	4		
	5		21
	6		
	5		
	6		18
-5	7		
528.10 GRAVEL with SAND-brown-medium dense to very dense			
	3		
	4		14
	7		
	10		
	50/2"		6
-10			
	24		
	17		7
	19		
	17		
	18		10
▼-15	21		
	14		
	26		9
	30		
	50/2"		
			10
-20			
513.10 CLAYEY GRAVEL & FRACTURED ROCK-gray-very dense			
	31		
	35		13
	50/0"		
509.10 Borehole continued with rock coring.			
-25			
-30			
-35			
-40			

The Unconfined Compressive Strength (UCS) Failure Mode is indicated by (B-Bulge, S-Shear, P-Penetrometer)
The SPT (N value) is the sum of the last two blow values in each sampling zone (AASHTO T206)

BBS, from 137 (Rev. 8-99)

Z:\PROJECTS\2013\13125 HNTB, I80 PHASE II (NEAR TERM)\13125 BORING LOGS\ 13125_LOG.GPJ 6/10/14

Geo Services, Inc.
Geotechnical, Environmental & Civil Engineering
805 Amherst Court, Suite 204
Naperville, Illinois 60565
(630) 355-2838

ROCK CORE LOG

PAGE 1 of 1
DATE 10/20/2013
LOGGED BY JK
GSI JOB No. 13125

ROUTE --
DESCRIPTION I-80 Reconstruction (Near Term Phase 2)
SECTION --
LOCATION SEC 15, T35N, R10E, SW 1/4, 3rd PM
COUNTY Will
CORING METHOD Rotary Wash
STRUCT. NO. --
Station --
CORING BARREL TYPE & SIZE NX Double Swivel-10 ft
Core Diameter 2.0 in
Top of Rock Elev. 509.1
Begin Core Elev. 509.1
BORING NO. BSB-13
Station 715+06
Offset 67.3' Left
Ground Surface Elev. 533.6

DEPTH (ft)	CORE RUN (#)	RECOVERY (%)	R.Q.D. (%)	CORE TIME (min/ft)	STRENGTH (tsf)
	1	89.0	50.0	n/a	563 @ -25.6'
-29.5					
-34.5					

SILURIAN SYSTEM, NIAGARAN SERIES DOLOMITE
RUN 1 (-24.5' to -34.5')
Light gray mottled gray with horizontal to wavy bedding. Fine grained with some horizontal fractures becoming highly fractured & weathered with clay seams from -30.6' to -34.5'.

Color pictures of the cores Yes Cores will be stored for examination for --
The "Strength" column represents the uniaxial compressive strength of the core sample (ASTM D-2938)

Notes:
1. For location of soil boring, see Sheet SA-1.

MODEL: SHEET
FILE NAME: C:\TRANSYSTEMS\PW_LOCAL\TRANSYSTEMS-PW-01\DMS20864\0990902_0903-62F94-101-BORING8.DGN
10-27-2025, 16:51:24

HNTB

USER NAME =	DESIGNED - MVV	REVISED -	
	CHECKED - APC	REVISED -	
PLOT SCALE =	DRAWN - LK	REVISED -	
PLOT DATE =	CHECKED - MVV	REVISED -	

STATE OF ILLINOIS
DEPARTMENT OF TRANSPORTATION

SOIL BORING LOGS 8
STRUCTURE NOS. 099-0902 (EB) & 099-0903 (WB)
SHEET SA-100 OF SA-112 SHEETS

F.A.I. RTE.	SECTION	COUNTY	TOTAL SHEETS	SHEET NO.
80	2017-057F	WILL	1342	764
		CONTRACT NO. 62F94		
	ILLINOIS	FED. AID PROJECT		

Geo Services, Inc.
Geotechnical, Environmental & Civil Engineering
805 Amherst Court, Suite 204
Naperville, Illinois 60563
(630) 355-2838

SOIL BORING LOG

GSI Job No. 13125
Page 1 of 2
Date 3/17/14

ROUTE F.A.I RTE. 80 DESCRIPTION I-80 Phase II (Near Term) LOGGED BY NW
SECTION LOCATION SW 1/4, SEC. 15, TWP. T35N, RNG. R10E, 3rd PM
COUNTY Will DRILLING METHOD Hollow Stem Auger/Rotary HAMMER TYPE CME Automatic

STRUCT. NO.
Station
BORING NO. BSB-15
Station 715+97
Offset 23.20ft Left
Ground Surface Elev. 574.70 ft

Surface Water Elev. n/a ft
Stream Bed Elev. n/a ft
Groundwater Elev.:
First Encounter Dry to 10.0' ft
Upon Completion n/a ft
After ___ Hrs. ___ ft

Description	Elev.	DEPTH (ft)	BLOWS (/6")	UCS Qu (tsf)	MOIST (%)
6.0" ASPHALT, 6.0" CRUSHED STONE	573.70				
CLAY to CLAY LOAM-brown & gray-stiff to hard (Fill)			1		
			2	1.0	18
			3	B	
			9		
			13	2.5	21
		-5	4	P	
			10		
			9	2.3	19
			9	B	
			6		
			7	1.0	22
		-10	7	B	
			4		
			7	1.0	25
			7	P	
			4		
			5	1.7	21
		-15	8	B	
			3		
			3	1.5	22
			4	P	
			5		
			7	1.9	17
		-20	10	B	
CLAY to CLAY LOAM-brown & gray-stiff to hard (Fill) *(continued)*					
			6		
			7	1.5	17
			6	B	
			8		
			0	2.5	15
		-25	13	B	
			8		
			10	1.3	16
			12	B	
			7		
			8	2.5	15
		-30	13	P	
			50/4"		
					15
		-35			
			8		
			13	1.5	20
		-40	19	B	

The Unconfined Compressive Strength (UCS) Failure Mode is indicated by (B-Bulge, S-Shear, P-Penetrometer)
The SPT (N value) is the sum of the last two blow values in each sampling zone (AASHTO T206)
BBS, from 137 (Rev. 8-99)

Z:\PROJECTS\2013\1325 HNTB, I-80 PHASE II (NEAR TERM)\13125 BORING LOGS\13125_LOG.GPJ 6/13/14

Geo Services, Inc.
Geotechnical, Environmental & Civil Engineering
805 Amherst Court, Suite 204
Naperville, Illinois 60563
(630) 355-2838

SOIL BORING LOG

GSI Job No. 13125
Page 2 of 2
Date 3/17/14

ROUTE F.A.I RTE. 80 DESCRIPTION I-80 Phase II (Near Term) LOGGED BY NW
SECTION LOCATION SW 1/4, SEC. 15, TWP. T35N, RNG. R10E, 3rd PM
COUNTY Will DRILLING METHOD Hollow Stem Auger/Rotary HAMMER TYPE CME Automatic

STRUCT. NO.
Station
BORING NO. BSB-15
Station 715+97
Offset 23.20ft Left
Ground Surface Elev. 574.70 ft

Surface Water Elev. n/a ft
Stream Bed Elev. n/a ft
Groundwater Elev.:
First Encounter Dry to 10.0' ft
Upon Completion n/a ft
After ___ Hrs. ___ ft

Description	Elev.	DEPTH (ft)	BLOWS (/6")	UCS Qu (tsf)	MOIST (%)
CLAY to CLAY LOAM-brown & gray-stiff to hard (Fill) *(continued)*					
			13	4.3	21
		-45	18	P	
			10		
			12		67
		-50	21		
			37		
			50/5"		14
		-55			
			50/1"		
		-60			
Drillers Observation: Cobbles & Boulders *(continued)*					
	512.20				
Drillers Observation: Apparent bedrock					
	510.70				
Borehole continued with rock coring.		-65			
		-70			
		-75			
		-80			
ORGANIC SILTY LOAM-black (A-7)	527.70				
SILTY LOAM with FRACTURED ROCK-brown & gray-very dense	522.70				
Drillers Observation: Cobbles & Boulders	518.70				

The Unconfined Compressive Strength (UCS) Failure Mode is indicated by (B-Bulge, S-Shear, P-Penetrometer)
The SPT (N value) is the sum of the last two blow values in each sampling zone (AASHTO T206)
BBS, from 137 (Rev. 8-99)

Z:\PROJECTS\2013\1325 HNTB, I-80 PHASE II (NEAR TERM)\13125 BORING LOGS\13125_LOG.GPJ 6/13/14

Geo Services, Inc.
Geotechnical, Environmental & Civil Engineering
805 Amherst Court, Suite 204
Naperville, Illinois 60563
(630) 355-2838

ROCK CORE LOG

PAGE 1 of 1
DATE 3/17/2014
LOGGED BY JK
GSI JOB No. 13125

ROUTE --
SECTION --
COUNTY Will
STRUCT. NO. --
Station --
BORING NO. BSB-15
Station 715+97
Offset 23.2' Left
Ground Surface Elev. 574.7

DESCRIPTION I-80 Reconstruction (Near Term Phase 2)
LOCATION SEC 15, T35N, R10E, SW 1/4, 3rd PM
CORING METHOD Rotary Wash
CORING BARREL TYPE & SIZE NX Double Swivel-10 ft
Core Diameter 2.0 in
Top of Rock Elev. 512.2
Begin Core Elev. 510.7

Description	DEPTH (ft)	CORE RUN (#)	RECOVERY (%)	R.Q.D. (%)	CORE TIME (min/ft)	STRENGTH (tsf)
SILURIAN SYSTEM, NIAGARAN SERIES DOLOMITE RUN 1 (-64.0' to -74.0') Light gray with horizontal bedding. Highly fractured & weathered with clay partings from -65.5' to -68.7'. Some horizontal fractures.		1	100.0	64.0	n/a	332 @ -64.5'
	-69					
	-74					

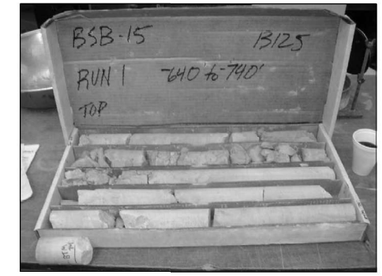

Color pictures of the cores Yes Cores will be stored for examination for --
The "Strength" column represents the uniaxial compressive strength of the core sample (ASTM D-2938)

Notes:
1. For location of soil boring, see Sheet SA-1.

MODEL: SHEET
FILE NAME: C:\TRANSYSTEMS\PW_LOCAL\TRANSYSTEMS-PW-01\DMS20864\0990902_0903-62F94-102-BORING9.DGN

HNTB

USER NAME =	DESIGNED - MVV	REVISED -	
	CHECKED - APC	REVISED -	
PLOT SCALE =	DRAWN - LK	REVISED -	
PLOT DATE =	CHECKED - MVV	REVISED -	

STATE OF ILLINOIS
DEPARTMENT OF TRANSPORTATION

SOIL BORING LOGS 9
STRUCTURE NOS. 099-0902 (EB) & 099-0903 (WB)
SHEET SA-101 OF SA-112 SHEETS

F.A.I. RTE.	SECTION	COUNTY	TOTAL SHEETS	SHEET NO.
80	2017-057F	WILL	1342	765
		CONTRACT NO. 62F94		
	ILLINOIS	FED. AID PROJECT		

10-27-2025, 16:51:28

Geo Services, Inc.
Geotechnical, Environmental & Civil Engineering
805 Amherst Court, Suite 204
Naperville, Illinois 60565
(630) 355-2688

SOIL BORING LOG

GSI Job No. 13125
Page 1 of 2
Date 6/1/15

ROUTE F.A.I RTE. 80 **DESCRIPTION** I-80 Phase II (Near Term) **LOGGED BY** NW

SECTION 2013-008B & 2013-009B **LOCATION** SW 1/4, **SEC.** 15, **TWP.** T35N, **RNG.** R10E, 3rd **PM**

COUNTY Will **DRILLING METHOD** Hollow Stem Auger/Rotary **HAMMER TYPE** Diedrich Automatic

STRUCT. NO.
Station

BORING NO. BSB-52
Station 715+98
Offset 4.50ft Left
Ground Surface Elev. 574.50 ft

Surface Water Elev. n/a ft
Stream Bed Elev. n/a ft

Groundwater Elev.:
First Encounter Dry to 10.0' ft
Upon Completion n/a ft
After ___ **Hrs.** ___ ft

Description	Elev.	DEPTH (ft)	BLOWS (/6")	UCS Qu (tsf)	MOIST (%)
Blind drill to -41.0'.		-5, -10, -15, -20			
Blind drill to -41.0'. *(continued)*		-25, -30, -35, -40			

The Unconfined Compressive Strength (UCS) Failure Mode is indicated by (B-Bulge, S-Shear, P-Penetrometer)
The SPT (N value) is the sum of the last two blow values in each sampling zone (AASHTO T206)

BBS, from 137 (Rev. 8-99)

Z:\PROJECTS\2013\13125 HNTB, I-80 PHASE II (NEAR TERM)\13125 BORING LOGS\13125_LOG.GPJ 6/1/15

Geo Services, Inc.
Geotechnical, Environmental & Civil Engineering
805 Amherst Court, Suite 204
Naperville, Illinois 60565
(630) 355-2688

SOIL BORING LOG

GSI Job No. 13125
Page 2 of 2
Date 6/1/15

ROUTE F.A.I RTE. 80 **DESCRIPTION** I-80 Phase II (Near Term) **LOGGED BY** NW

SECTION 2013-008B & 2013-009B **LOCATION** SW 1/4, **SEC.** 15, **TWP.** T35N, **RNG.** R10E, 3rd **PM**

COUNTY Will **DRILLING METHOD** Hollow Stem Auger/Rotary **HAMMER TYPE** Diedrich Automatic

STRUCT. NO.
Station

BORING NO. BSB-52
Station 715+98
Offset 4.50ft Left
Ground Surface Elev. 574.50 ft

Surface Water Elev. n/a ft
Stream Bed Elev. n/a ft

Groundwater Elev.:
First Encounter Dry to 10.0' ft
Upon Completion n/a ft
After ___ **Hrs.** ___ ft

Description	Elev.	DEPTH (ft)	BLOWS (/6")	UCS Qu (tsf)	MOIST (%)
Blind drill to -41.0'. *(continued)*					
CLAY LOAM-brown & gray-stiff (Fill)	533.50		10, 12, 17	1.3 P	14
CLAYEY CINDERS & STONE-dark brown & black-dense (Fill)	531.50	-45	42, 19, 13		11
CLAY LOAM-dark brown & black-dense (Fill)	529.00		18, 21, 25		15
CLAYEY GRAVEL & STONE-dark brown & gray-medium dense to dense (Fill)	526.50	-50	9, 17, 15		18
CLAYEY SAND & GRAVEL-brown & gray-dense	521.50	-55	6, 9, 13, 24, 22, 19		25, 17
GRAVEL with Sand-brown-very dense	519.00		50/5"		9
SILTY SAND & GRAVEL-brown-very dense	516.50	-60	50/5"		11
SILTY LOAM & FRACTURED ROCK-gray-very dense	514.00		24, 50/5"		18
Drillers Observation: Possible Bedrock	511.50				
End Of Boring @ -63.5'. Boring backfilled with cuttings.	511.00	-65, -70, -75, -80			

The Unconfined Compressive Strength (UCS) Failure Mode is indicated by (B-Bulge, S-Shear, P-Penetrometer)
The SPT (N value) is the sum of the last two blow values in each sampling zone (AASHTO T206)

BBS, from 137 (Rev. 8-99)

Z:\PROJECTS\2013\13125 HNTB, I-80 PHASE II (NEAR TERM)\13125 BORING LOGS\13125_LOG.GPJ 6/1/15

Notes:
1. For location of soil boring, see Sheet SA-1.

MODEL: SHEET
FILE NAME: C:\TRANSYSTEMS\PW_LOCAL\TRANSYSTEMS-PW-01\DMS20864\0990902_0903-62F94-103-BORING10.DGN

HNTB

USER NAME =	DESIGNED - MVV	REVISED -	
	CHECKED - APC	REVISED -	
PLOT SCALE =	DRAWN - LK	REVISED -	
PLOT DATE =	CHECKED - MVV	REVISED -	

STATE OF ILLINOIS
DEPARTMENT OF TRANSPORTATION

SOIL BORING LOGS 10
STRUCTURE NOS. 099-0902 (EB) & 099-0903 (WB)

SHEET SA-102 OF SA-112 SHEETS

F.A.I. RTE.	SECTION	COUNTY	TOTAL SHEETS	SHEET NO.
80	2017-057F	WILL	1342	766
		CONTRACT NO. 62F94		
	ILLINOIS	FED. AID PROJECT		

10-27-2025, 16:51:32

Geo Services, Inc.
Geotechnical, Environmental & Civil Engineering
805 Amherst Court, Suite 204
Naperville, Illinois 60563
(630) 355-2448

SOIL BORING LOG

GEO Job No. 13125
Page 1 of 2
Date 3/21/22

ROUTE F.A.I RTE. 80 DESCRIPTION I-80 Phase II (Near Term) LOGGED BY TC
SECTION (TBD) LOCATION SW 1/4, SEC. 15, TWP. T35N, RNG. R30E, 3rd PM
COUNTY Will DRILLING METHOD Hollow Stem Auger/Rotary HAMMER TYPE CME Automatic

STRUCT. NO. -
Station -
BORING NO. BSB-054
Station 709+72
Offset 60.10ft Left
Ground Surface Elev. 574.83 ft

Surface Water Elev. n/a ft
Stream Bed Elev. n/a ft
Groundwater Elev.:
First Encounter Dry to -10.0' ft
Upon Completion n/a ft
After - Hrs. - ft

Description	Elev. (ft)	DEPTH (ft)	BLOWS (/6")	UCS Qu (tsf)	MOIST (%)	DRY DENSITY (pcf)
11.0" ASPHALT	573.91					
CLAY LOAM-brown & gray-stiff to hard (Fill)			25			
			6 4	4.50 P	19	
			12			
		-5	11 8	4.00 B	11	
			5			
			7 6	3.10 B	18	
			5			
		-10	7 6	3.00 P	16	
			2			
			2 28	1.00 P	26	
			8			
		-15	9 8	1.00 P	23	
			5			
			5 8	1.20 R	19	
			6			
		-20	7 8	1.50 B	16	
CLAY LOAM-brown & gray-stiff to hard (Fill) *(continued)*						
			6			
			8 10	3.00 P	16	
			6			
		-25	13 13	3.00 P	16	
			6			
			9 6	1.00 B	18	
			8			
		-30	20 17	1.00 P	19	
			5			
		-35	7 13	1.30 B	19	
			8			
		-40	29 20	4.50 P	16	

The Unconfined Compressive Strength (UCS) Failure Mode is indicated by (B-Bulge, S-Shear, P-Penetrometer)
The SPT (N value) is the sum of the last two blow values in each sampling zone (AASHTO T206), GP-Geoprobe Hand Auger
BBS, from 137 (Rev. 8-99)

Z:\PROJECTS\2013\13125-HNTB, I-80 PHASE II (NEAR TERM)\13125 BORING LOGS\13125_LOG GP 1 5\4\22

Geo Services, Inc.
Geotechnical, Environmental & Civil Engineering
805 Amherst Court, Suite 204
Naperville, Illinois 60563
(630) 355-2448

SOIL BORING LOG

GEO Job No. 13125
Page 2 of 2
Date 3/21/22

ROUTE F.A.I RTE. 80 DESCRIPTION I-80 Phase II (Near Term) LOGGED BY TC
SECTION (TBD) LOCATION SW 1/4, SEC. 15, TWP. T35N, RNG. R30E, 3rd PM
COUNTY Will DRILLING METHOD Hollow Stem Auger/Rotary HAMMER TYPE CME Automatic

STRUCT. NO. -
Station -
BORING NO. BSB-054
Station 709+72
Offset 60.10ft Left
Ground Surface Elev. 574.83 ft

Surface Water Elev. n/a ft
Stream Bed Elev. n/a ft
Groundwater Elev.:
First Encounter Dry to -10.0' ft
Upon Completion n/a ft
After - Hrs. - ft

Description	Elev. (ft)	DEPTH (ft)	BLOWS (/6")	UCS Qu (tsf)	MOIST (%)	DRY DENSITY (pcf)
CLAY LOAM-brown & gray-stiff to hard (Fill) *(continued)*						
	532.83					
FRACTURED ROCK & GRAVEL-brown-dense to very dense						
			22			
		-45	26 12		6	
			12			
		-50	20 21		4	
			17			
		-55	28 34		7	
			22			
		-60	20 13		11	
FRACTURED ROCK & GRAVEL-brown-dense to very dense *(continued)*						
	510.83					
Borehole continued with rock coring.		-65				
		-70				
		-75				
		-80				

The Unconfined Compressive Strength (UCS) Failure Mode is indicated by (B-Bulge, S-Shear, P-Penetrometer)
The SPT (N value) is the sum of the last two blow values in each sampling zone (AASHTO T206), GP-Geoprobe Hand Auger
BBS, from 137 (Rev. 8-99)

Z:\PROJECTS\2013\13125-HNTB, I-80 PHASE II (NEAR TERM)\13125 BORING LOGS\13125_LOG GP 1 5\4\22

Geo Services, Inc.
Geotechnical, Environmental & Civil Engineering
805 Amherst Court, Suite 204
Naperville, Illinois 60563
(630) 355-2448

ROCK CORE LOG

GEO Job No. 13125
Page 1 of 1
Date 3/21/22

ROUTE F.A.I RTE. 80 DESCRIPTION I-80 Phase II (Near Term) LOGGED BY TC
SECTION (TBD) LOCATION SW 1/4, SEC. 15, TWP. T35N, RNG. R30E, 3rd PM
COUNTY Will CORING METHOD Rotary Wash

STRUCT. NO. -
Station -
BORING NO. BSB-054
Station 709+72
Offset 60.10ft Left
Ground Surface Elev. 574.83 ft

CORING BARREL TYPE & SIZE NX Double Swivel-10 ft
Core Diameter 2 in
Top of Rock Elev. 510.83 ft
Begin Core Elev. 510.83 ft

Description	Elev. (ft)	DEPTH (ft)	CORE (#)	RECOVERY (%)	R.Q.D. (%)	CORE TIME (min/ft)	STRENGTH (tsf)
RUN 1 (-64.0' to -74.0') SILURIAN SYSTEM, NIAGARAN SERIES DOLOMITE Light gray & porous with horizontal bedding. Some horizontal fractures & rust staining throughout.	510.83	-65	1	100	85		542.00
		-70					
RUN 2 (-74.0' to -79.0') SILURIAN SYSTEM, NIAGARAN SERIES DOLOMITE Light gray & porous with horizontal bedding. Highly weathered & fractured throughout.	500.83	-75	2	100	35		482.00
	495.83						
End Of Boring @ -79.0'. Boring backfilled with cuttings.		-80					

Color pictures of the cores Yes
Cores will be stored for examination until 5 yrs after const.
The "Strength" column represents the uniaxial compressive strength of the core sample (ASTM D-2938)
BBS, form 138 (Rev. 8-99)

Notes:
1. For location of soil boring, see Sheet SA-1.

MODEL: SHEET
FILE NAME: C:\TRANSYSTEMS\PW_LOCAL\TRANSYSTEMS-PW-01\DMS20864\0990902_0903-62F94-104-BORING11.DGN

HNTB

USER NAME =	DESIGNED - MVV	REVISED -	
	CHECKED - APC	REVISED -	
PLOT SCALE =	DRAWN - LK	REVISED -	
PLOT DATE =	CHECKED - MVV	REVISED -	

STATE OF ILLINOIS
DEPARTMENT OF TRANSPORTATION

SOIL BORING LOGS 11
STRUCTURE NOS. 099-0902 (EB) & 099-0903 (WB)
SHEET SA-103 OF SA-112 SHEETS

F.A.I. RTE.	SECTION	COUNTY	TOTAL SHEETS	SHEET NO.
80	2017-057F	WILL	1342	767
		CONTRACT NO. 62F94		
		ILLINOIS	FED. AID PROJECT	

10-27-2025, 16:51:36

Geo Services, Inc.
Geotechnical, Environmental & Civil Engineering
805 Amherst Court, Suite 204
Naperville, Illinois 60565
(630) 355-2838

SOIL BORING LOG

GSI Job No. 13125
Page 1 of 2
Date 3/26/14

ROUTE F.A.I RTE. 80 DESCRIPTION I-80 Phase II (Near Term) LOGGED BY NW
SECTION LOCATION SW 1/4, SEC. 15, TWP. T35N, RNG. R10E, 3rd PM
COUNTY Will DRILLING METHOD Hollow Stem Auger/Rotary HAMMER TYPE CME Automatic

STRUCT. NO.
Station
BORING NO. BSB-02
Station 710+92
Offset 20.50ft Right
Ground Surface Elev. 576.90 ft

Surface Water Elev. n/a ft
Stream Bed Elev. n/a ft
Groundwater Elev.:
First Encounter Dry to 10.0' ft
Upon Completion n/a ft
After Hrs. ft

Description	Elev.	DEPTH (ft)	BLOWS (/6")	UCS Qu (tsf)	MOIST (%)
6.0" ASPHALT, 12.0" CONCRETE	570.40				
CLAY LOAM-brown & gray-stiff to hard (Fill)			5	2.8	19
			5	P	
			5		
			7	3.1	18
		-5	11	B	
			4		
			5	2.8	20
			7	P	
			7		
			7	4.3	19
		-10	11	P	
			5		
			6	1.8	13
			8	P	
			3		
			6	2.9	21
		-15	9	B	
			7		
			9	2.3	17
			14	P	
SILTY CLAY LOAM-brown & gray-medium dense (Fill)	558.90		7		
			10		13
		-20	14		
SILTY CLAY LOAM-brown & gray-medium dense (Fill) *(continued)*			11		
			16		14
			13		
CLAY LOAM-brown & gray-stiff to very stiff (Fill)	553.90		8		
			10	2.2	17
		-25	13	B	
			6		
			9	1.9	18
			14	B	
			8		
			11	2.9	17
		-30	14	B	
			9		
			13	1.5	14
		-35	14	P	
			10		
			13		17
		-40	17		
SILTY CLAY LOAM-brown & gray-medium dense (Fill)	544.90				

The Unconfined Compressive Strength (UCS) Failure Mode is indicated by (B-Bulge, S-Shear, P-Penetrometer)
The SPT (N value) is the sum of the last two blow values in each sampling zone (AASHTO T206)

BBS, from 137 (Rev. 8-99)

Z:\PROJECTS\013\13125 I-NTB, I-80 PHASE II (NEAR TERM)\13125 BORING LOGS\13125_LOG.GPJ 6/10/14

Geo Services, Inc.
Geotechnical, Environmental & Civil Engineering
805 Amherst Court, Suite 204
Naperville, Illinois 60565
(630) 355-2838

SOIL BORING LOG

GSI Job No. 13125
Page 2 of 2
Date 3/26/14

ROUTE F.A.I RTE. 80 DESCRIPTION I-80 Phase II (Near Term) LOGGED BY NW
SECTION LOCATION SW 1/4, SEC. 15, TWP. T35N, RNG. R10E, 3rd PM
COUNTY Will DRILLING METHOD Hollow Stem Auger/Rotary HAMMER TYPE CME Automatic

STRUCT. NO.
Station
BORING NO. BSB-02
Station 710+92
Offset 20.50ft Right
Ground Surface Elev. 576.90 ft

Surface Water Elev. n/a ft
Stream Bed Elev. n/a ft
Groundwater Elev.:
First Encounter Dry to 10.0' ft
Upon Completion n/a ft
After Hrs. ft

Description	Elev.	DEPTH (ft)	BLOWS (/6")	UCS Qu (tsf)	MOIST (%)
SILTY CLAY LOAM-brown & gray-medium dense (Fill) *(continued)*					
CINDERS, SAND & GRAVEL-brown & black-medium dense (Fill)	534.90				
			6		
			9		27
		-45	15		
CLAYEY SAND & GRAVEL-brown-medium dense (Apparent Fill)	529.90				
			5		
			5		27
		-50	7		
SAND, GRAVEL & FRACTURED ROCK-brown & gray-medium dense to very dense	524.90				
			26		
			50/4"		12
		-55			
			11		
			5		8
		-60	6		
SAND, GRAVEL & FRACTURED ROCK-brown & gray-medium dense to very dense *(continued)*					
			27		
			50/4"		7
		-65			
	511.40				
Drillers Observation: Apparent bedrock	510.90				
Borehole continued with rock coring.					
		-70			
		-75			
		-80			

The Unconfined Compressive Strength (UCS) Failure Mode is indicated by (B-Bulge, S-Shear, P-Penetrometer)
The SPT (N value) is the sum of the last two blow values in each sampling zone (AASHTO T206)

BBS, from 137 (Rev. 8-99)

Z:\PROJECTS\013\13125 I-NTB, I-80 PHASE II (NEAR TERM)\13125 BORING LOGS\13125_LOG.GPJ 6/10/14

Geo Services, Inc.
Geotechnical, Environmental & Civil Engineering
805 Amherst Court, Suite 204
Naperville, Illinois 60565
(630) 355-2838

ROCK CORE LOG

PAGE 1 of 1
DATE 3/26/2014
LOGGED BY JK
GSI JOB No. 13125

ROUTE -- DESCRIPTION I-80 Reconstruction (Near Term Phase 2)
SECTION -- LOCATION SEC 15, T35N, R10E, SW 1/4, 3rd PM
COUNTY Will CORING METHOD Rotary Wash
STRUCT. NO. -- CORING BARREL TYPE & SIZE NX Double Swivel-10 ft
Station -- Core Diameter 2.0 in
BORING NO. BSB-02 Top of Rock Elev. 511.4
Station 710+92 Begin Core Elev. 510.9
Offset 10.6' Right
Ground Surface Elev. 576.9

Description	DEPTH (ft)	CORE RUN (#)	RECOVERY (%)	R.Q.D. (%)	CORE TIME (min/ft)	STRENGTH (tsf)
SILURIAN SYSTEM, NIAGARAN SERIES DOLOMITE RUN 1 (-66.0' to -76.0') Light gray to gray with horizontal bedding. Porous & weathered rust staining throughout. Highly fractured throughout with numerous intersecting horizontal & vertical fractures.		1	100.0	21.0	n/a	◆39 ●-66.7
	-71					
	-76					

Color pictures of the cores Yes Cores will be stored for examination for —
The "Strength" column represents the uniaxial compressive strength of the core sample (ASTM D-2938)

Notes:
1. For location of soil boring, see Sheet SA-1.

MODEL: SHEET
FILE NAME: C:\TRANSYSTEMS\PW_LOCAL\TRANSYSTEMS-PW-01\DMS20864\0990902_0903-62F94-105-BORING12.DGN

HNTB

USER NAME =	DESIGNED - MVV	REVISED -	
	CHECKED - APC	REVISED -	
PLOT SCALE =	DRAWN - LK	REVISED -	
PLOT DATE =	CHECKED - MVV	REVISED -	

STATE OF ILLINOIS
DEPARTMENT OF TRANSPORTATION

SOIL BORING LOGS 12
STRUCTURE NOS. 099-0902 (EB) & 099-0903 (WB)
SHEET SA-104 OF SA-112 SHEETS

F.A.I. RTE.	SECTION	COUNTY	TOTAL SHEETS	SHEET NO.
80	2017-057F	WILL	1342	768
		CONTRACT NO. 62F94		
	ILLINOIS	FED. AID PROJECT		

10-27-2025, 16:51:41

Geo Services, Inc.
Geotechnical, Environmental & Civil Engineering
805 Amherst Court, Suite 204
Naperville, Illinois 60565
(630) 355-2838

SOIL BORING LOG

GSI Job No. 13125
Page 1 of 2
Date 5/21/14

ROUTE F.A.I RTE. 80 DESCRIPTION I-80 Phase II (Near Term) LOGGED BY MD
SECTION LOCATION SW 1/4, SEC. 15, TWP. T35N, RNG. R10E, 3rd PM
COUNTY Will DRILLING METHOD Mud Rotary HAMMER TYPE CME Automatic

STRUCT. NO.
Station
BORING NO. BSB-04
Station 711+50
Offset 52.60ft Right
Ground Surface Elev. 577.40 ft

Surface Water Elev. n/a ft
Stream Bed Elev. n/a ft
Groundwater Elev.:
First Encounter n/a ft
Upon Completion n/a ft
After ___ Hrs. ___ ft

Description	Elev.	DEPTH (ft)	BLOWS (/6")	UCS Qu (tsf)	MOIST (%)
2.25" ASPHALT, 7.25" CONCRETE BRIDGE DECK	576.61				
VOID					
		-5			
		-10			
		-15			
		-20			
VOID *(continued)*					
		-25			
CLAY LOAM-brown & gray spotted black-loose to dense (Fill)	548.40				
		-30	1 2 3		
		-35	2 10 21	2.8 P	
		-40	4 4 5		

The Unconfined Compressive Strength (UCS) Failure Mode is indicated by (B-Bulge, S-Shear, P-Penetrometer)
The SPT (N value) is the sum of the last two blow values in each sampling zone (AASHTO T206)

BBS, from 137 (Rev. 8-99)

Z:\PROJECTS\2013\13125 I-NTB, I-80 PHASE II (NEAR TERM)\13125 BORING LOGS\13125_LOG.GPJ 6/10/14

Geo Services, Inc.
Geotechnical, Environmental & Civil Engineering
805 Amherst Court, Suite 204
Naperville, Illinois 60565
(630) 355-2838

SOIL BORING LOG

GSI Job No. 13125
Page 2 of 2
Date 5/21/14

ROUTE F.A.I RTE. 80 DESCRIPTION I-80 Phase II (Near Term) LOGGED BY MD
SECTION LOCATION SW 1/4, SEC. 15, TWP. T35N, RNG. R10E, 3rd PM
COUNTY Will DRILLING METHOD Mud Rotary HAMMER TYPE CME Automatic

STRUCT. NO.
Station
BORING NO. BSB-04
Station 711+50
Offset 52.60ft Right
Ground Surface Elev. 577.40 ft

Surface Water Elev. n/a ft
Stream Bed Elev. n/a ft
Groundwater Elev.:
First Encounter n/a ft
Upon Completion n/a ft
After ___ Hrs. ___ ft

Description	Elev.	DEPTH (ft)	BLOWS (/6")	UCS Qu (tsf)	MOIST (%)
CLAY LOAM-brown & gray spotted black-loose to dense (Fill) *(continued)*					
CLAY-gray-very stiff	535.40				
			4 6 10	3.3 B	
GRAVEL-gray-medium dense	532.40	-45			
		-50	2 7 3		
FRACTURED ROCK-brown-medium dense to dense	525.40				
		-55	14 10 18		
		-60	24 17 15		
FRACTURED ROCK-brown-medium dense to dense *(continued)*					
			45 50/5"		
Drillers Observation: Fractured/weathered rock	512.90	-65			
Drillers Observation: Apparent Bedrock	510.40 509.90				
Borehole continued with rock coring.		-70			
		-75			
		-80			

The Unconfined Compressive Strength (UCS) Failure Mode is indicated by (B-Bulge, S-Shear, P-Penetrometer)
The SPT (N value) is the sum of the last two blow values in each sampling zone (AASHTO T206)

BBS, from 137 (Rev. 8-99)

Z:\PROJECTS\2013\13125 I-NTB, I-80 PHASE II (NEAR TERM)\13125 BORING LOGS\13125_LOG.GPJ 6/10/14

Geo Services, Inc.
Geotechnical, Environmental & Civil Engineering
805 Amherst Court, Suite 204
Naperville, Illinois 60565
(630) 355-2838

ROCK CORE LOG

PAGE 1 of 3
DATE 5/21/2014
LOGGED BY JK
GSI JOB No. 13125

ROUTE -- DESCRIPTION I-80 Reconstruction (Near Term Phase 2)
SECTION -- LOCATION --
COUNTY Will CORING METHOD Rotary Wash
STRUCT. NO. -- CORING BARREL TYPE & SIZE NX Double Swivel-10 ft
Station --
Core Diameter 2.0 in
Top of Rock Elev. 510.4
Begin Core Elev. 509.9
BORING NO. BSB-04
Station 711+50
Offset 52.6' Right
Ground Surface Elev. 577.4

Description	Elev.	DEPTH (ft)	CORE RUN (#)	RECOVERY (%)	RQD (%)	CORE TIME (min/ft)	STRENGTH (tsf)
SILURIAN SYSTEM, NIAGARAN SERIES DOLOMITE RUN 1 (-67.5' to -75.5') Light gray with horizontal to wavy bedding. Highly fractured & weathered with clay seams throughout.			1	100.0	45.5	n/a	618 @ -67.7
		-72.5					
		-75.5					

Color pictures of the cores Yes ___ Cores will be stored for examination for ___
The "Strength" column represents the uniaxial compressive strength of the core sample (ASTM D-2938)

Notes:
1. For location of soil boring, see Sheet SA-1.

MODEL: SHEET
FILE NAME: C:\TRANSYSTEMS\PW_LOCAL\TRANSYSTEMS-PW-01\DMS20864\0990902_0903-62F94-106-BORING13.DGN

HNTB

USER NAME =	DESIGNED - MVV	REVISED -
	CHECKED - APC	REVISED -
PLOT SCALE =	DRAWN - LK	REVISED -
PLOT DATE =	CHECKED - MVV	REVISED -

STATE OF ILLINOIS
DEPARTMENT OF TRANSPORTATION

SOIL BORING LOGS 13
STRUCTURE NOS. 099-0902 (EB) & 099-0903 (WB)
SHEET SA-105 OF SA-112 SHEETS

F.A.I. RTE.	SECTION	COUNTY	TOTAL SHEETS	SHEET NO.
80	2017-057F	WILL	1342	769
		CONTRACT NO. 62F94		
	ILLINOIS	FED. AID PROJECT		

10-27-2025, 16:51:45

Geo Services, Inc.
Geotechnical, Environmental & Civil Engineering
805 Amherst Court, Suite 204
Naperville, Illinois 60565
(630) 355-2838

ROCK CORE LOG

PAGE 2 of 3
DATE 5/21/2014
LOGGED BY JK
GSI JOB No. 13125

ROUTE --
DESCRIPTION I-80 Reconstruction (Near Term Phase 2)
SECTION --
LOCATION --
COUNTY Will
CORING METHOD Rotary Wash
STRUCT. NO. --
Station --
CORING BARREL TYPE & SIZE NX Double Swivel-10 ft
Core Diameter 2.0 in
Top of Rock Elev. 510.4
Begin Core Elev. 509.9
BORING NO. BSB-04
Station 711+50
Offset 52.6' Right
Ground Surface Elev. 577.4

DEPTH (ft)	CORE RUN (#)	RECOVERY (%)	R.Q.D. (%)	CORE TIME (min/ft)	STRENGTH (tsf)
SILURIAN SYSTEM, NIAGARAN SERIES DOLOMITE RUN 2 (-75.5' to -84.0') Light gray & porous with horizontal to wavy bedding. Highly fractured & weathered with clay seams throughout.	2	100.0	10.6	n/a	594 @ -83.7'
-80.5					
-84.0					

Color pictures of the cores Yes Cores will be stored for examination for —
The "Strength" column represents the uniaxial compressive strength of the core sample (ASTM D-2938)

Geo Services, Inc.
Geotechnical, Environmental & Civil Engineering
805 Amherst Court, Suite 204
Naperville, Illinois 60565
(630) 355-2838

ROCK CORE LOG

PAGE 3 of 3
DATE 5/21/2014
LOGGED BY JK
GSI JOB No. 13125

ROUTE --
DESCRIPTION I-80 Reconstruction (Near Term Phase 2)
SECTION --
LOCATION --
COUNTY Will
CORING METHOD Rotary Wash
STRUCT. NO. --
Station --
CORING BARREL TYPE & SIZE NX Double Swivel-10 ft
Core Diameter 2.0 in
Top of Rock Elev. 510.4
Begin Core Elev. 509.9
BORING NO. BSB-04
Station 711+50
Offset 52.6' Right
Ground Surface Elev. 577.4

DEPTH (ft)	CORE RUN (#)	RECOVERY (%)	R.Q.D. (%)	CORE TIME (min/ft)	STRENGTH (tsf)
SILURIAN SYSTEM, NIAGARAN SERIES DOLOMITE RUN 3 (-84.0' to -89.0') Light gray & porous with horizontal to wavy bedding. Highly fractured & weathered with clay seams throughout.	3	100.0	14.0	n/a	382 @ -85.8'
-89					

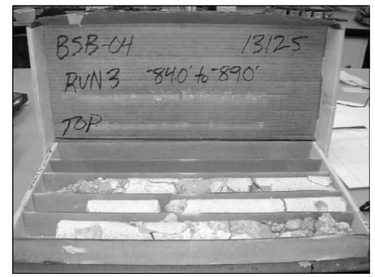

Color pictures of the cores Yes Cores will be stored for examination for —
The "Strength" column represents the uniaxial compressive strength of the core sample (ASTM D-2938)

Geo Services, Inc.
Geotechnical, Environmental & Civil Engineering
805 Amherst Court, Suite 204
Naperville, Illinois 60565
(630) 355-2838

SOIL BORING LOG

GSI Job No. 13125
Page 1 of 1
Date 10/25/13

ROUTE F.A.I RTE. 80 DESCRIPTION I-80 Phase II (Near Term) LOGGED BY TZ
SECTION LOCATION SW 1/4, SEC. 15, TWP. T35N, RNG. R10E, 3rd PM
COUNTY Will DRILLING METHOD Hollow Stem Auger/Rotary HAMMER TYPE CME Automatic

STRUCT. NO.
Station
BORING NO. BSB-06
Station 712+70
Offset 9.20ft Right
Ground Surface Elev. 543.50 ft

Surface Water Elev. n/a ft
Stream Bed Elev. n/a ft
Groundwater Elev.:
First Encounter Dry to 10.0' ft
Upon Completion n/a ft
After Hrs. ft

Description	Elev.	DEPTH (ft)	BLOWS (/6")	UCS Qu (tsf)	MOIST (%)
SAND, GRAVEL, ASPHALT & STONE-medium dense (Fill)			5		
			6		7
			7		
	540.50				
SAND, GRAVEL & STONE brown medium dense to dense (Fill)			5		
			7		8
		-5	8		
			14		
			15		6
			17		
			9		
			10		8
		-10	11		
	533.00				
SAND, GRAVEL & FRACTURED ROCK-brown-dense			36		
			15		9
			17		
			9		
			14		10
		-15	18		
			17		
			21		8
			29		
			27		
			20		11
		-20	11		
SAND, GRAVEL & FRACTURED ROCK-brown-dense *(continued)*			16		
			19		13
			32		
			15		
			17		12
		-25	30		
	518.00				
SANDY CLAY LOAM with GRAVEL-gray-very dense			37		
			39		10
			46		
	515.50				
SAND, GRAVEL & FRACTURED ROCK-brown-very dense			16		
			29		22
			45		
		-30			
	513.00				
SILTY GRAVEL & FRACTURED ROCK-gray-very dense			51/5"		
					10
	511.00				
Borehole continued with rock coring.					
		-35			
		-40			

The Uncontrined Compressive Strength (UCS) Failure Mode is indicated by (B-Bulge, S-Shear, P-Penetrometer)
The SPT (N value) is the sum of the last two blow values in each sampling zone (AASHTO T206)

BBS, from 137 (Rev. 8-99)

Z:\PROJECTS\2013\13125 IHTB - I-80 PHASE I (NEAR TERM)\13125 BORING_LOGS\13125_LOG.GPJ 6/11/14

Notes:
1. For location of soil boring, see Sheet SA-1.

MODEL: SHEET
FILE NAME: C:\TRANSYSTEMS\PW_LOCAL\TRANSYSTEMS-PW-01\DMS20864\0990902_0903-62F94-107-BORING14.DGN

HNTB

USER NAME =	DESIGNED - MVV	REVISED -
	CHECKED - APC	REVISED -
PLOT SCALE =	DRAWN - LK	REVISED -
PLOT DATE =	CHECKED - MVV	REVISED -

STATE OF ILLINOIS
DEPARTMENT OF TRANSPORTATION

SOIL BORING LOGS 14
STRUCTURE NOS. 099-0902 (EB) & 099-0903 (WB)
SHEET SA-106 OF SA-112 SHEETS

F.A.I. RTE.	SECTION	COUNTY	TOTAL SHEETS	SHEET NO.
80	2017-057F	WILL	1342	770
		CONTRACT NO. 62F94		
		ILLINOIS	FED. AID PROJECT	

10-27-2025, 16:51:49

Geo Services, Inc.
Geotechnical, Environmental & Civil Engineering
805 Amherst Court, Suite 204
Naperville, Illinois 60565
(630) 355-2838

ROCK CORE LOG

PAGE 1 of 1
DATE 10/25/2013
LOGGED BY JK
GSI JOB No. 13125

ROUTE --
DESCRIPTION I-80 Reconstruction (Near Term Phase 2)
SECTION --
LOCATION SEC 15, T35N, R10E, SW 1/4, 3rd PM
COUNTY Will
CORING METHOD Rotary Wash
STRUCT. NO. --
Station --
CORING BARREL TYPE & SIZE NX Double Swivel-10 ft
Core Diameter 2.0 in
Top of Rock Elev. 511.0
Begin Core Elev. 511.0
BORING NO. BSB-06
Station 712+70
Offset 9.2' Right
Ground Surface Elev. 543.5

DEPTH (ft)	CORE RUN (#)	RECOVERY (%)	R.Q.D. (%)	CORE TIME (min/ft)	STRENGTH (tsf)
	1	86.0	41.0	n/a	938 ● -36.7'
-37.5					
-42.5					

SILURIAN SYSTEM, NIAGARAN SERIES DOLOMITE
RUN 1 (-32.5' to -42.5')
Light gray with horizontal bedding. Highly fractured & weathered with clay seams from -32.5' to -36.5' & from -41.4' to -42.5'.

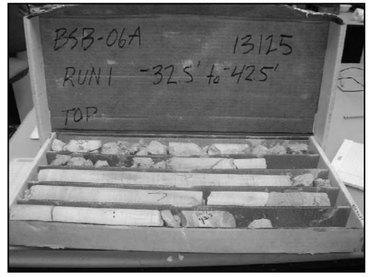

Color pictures of the cores Yes Cores will be stored for examination for --
The "Strength" column represents the uniaxial compressive strength of the core sample (ASTM D-2938)

Geo Services, Inc.
Geotechnical, Environmental & Civil Engineering
805 Amherst Court, Suite 204
Naperville, Illinois 60565
(630) 355-2838

SOIL BORING LOG

GSI Job No. 13125
Page 1 of 1
Date 10/28/13

ROUTE F.A.I RTE. 80
DESCRIPTION I-80 Phase II (Near Term)
LOGGED BY TZ
SECTION
LOCATION SW 1/4, SEC. 15, TWP. T35N, RNG. R10E, 3rd PM
COUNTY Will
DRILLING METHOD Hollow Stem Auger/Rotary
HAMMER TYPE CME Automatic

STRUCT. NO.
Station
BORING NO. BSB-08
Station 713+00
Offset 67.10ft Right
Ground Surface Elev. 535.40 ft

Surface Water Elev. n/a ft
Stream Bed Elev. n/a ft
Groundwater Elev.:
First Encounter Dry to 20.0' ft
Upon Completion n/a ft
After Hrs. ft

DEPTH (ft)	BLOWS (/6")	UCS Qu (tsf)	MOIST (%)
SAND, GRAVEL, ASPHALT & STONE-medium dense (Fill)			
	5		
	6		13
	14		
	9		
	10		13
-5	12		
529.90			
GRAVEL with SAND-brown-dense to very stiff			
	13		
	15		5
	21		
	50/5"		
			11
-10			
	15		
	16		4
	19		
	9		
	14		5
-15	27		
	30		
	36		12
	50/5"		
	50/1"		
			7
-20			

DEPTH (ft)	BLOWS (/6")	UCS Qu (tsf)	MOIST (%)
GRAVEL with SAND-brown-dense to very stiff *(continued)* 514.40			
Borehole continued with rock coring.			
-25			
-30			
-35			
-40			

The Unconfined Compressive Strength (UCS) Failure Mode is indicated by (B-Bulge, S-Shear, P-Penetrometer)
The SPT (N value) is the sum of the last two blow values in each sampling zone (AASHTO T206)

BBS, from 137 (Rev. 8-99)

Z:\PROJECTS\2013\13125 I-NTB, I-80 PHASE II (NEAR TERM)\13125 BORING LOGS\ 13125_LOG.GPJ 6/10/14

Geo Services, Inc.
Geotechnical, Environmental & Civil Engineering
805 Amherst Court, Suite 204
Naperville, Illinois 60565
(630) 355-2838

ROCK CORE LOG

PAGE 1 of 1
DATE 10/28/2013
LOGGED BY JK
GSI JOB No. 13125

ROUTE --
DESCRIPTION I-80 Reconstruction (Near Term Phase 2)
SECTION --
LOCATION SEC 15, T35N, R10E, SW 1/4, 3rd PM
COUNTY Will
CORING METHOD Rotary Wash
STRUCT. NO. --
Station --
CORING BARREL TYPE & SIZE NX Double Swivel-10 ft
Core Diameter 2.0 in
Top of Rock Elev. 514.4
Begin Core Elev. 514.4
BORING NO. BSB-08
Station 713+00
Offset 67.1' Right
Ground Surface Elev. 535.4

DEPTH (ft)	CORE RUN (#)	RECOVERY (%)	R.Q.D. (%)	CORE TIME (min/ft)	STRENGTH (tsf)
	1	100.0	23.0	n/a	209 ● -27.8'
-26					
-31					

SILURIAN SYSTEM, NIAGARAN SERIES DOLOMITE
RUN 1 (-21.0' to -31.0')
Light gray to gray with rust staining. Numerous horizontal fractures throughout with some clay seams. Vertical fractures from -22.7' to -23.3', -23.9' to -25.2', -26.0' to -27.2' & from -29.4' to -30.1'.

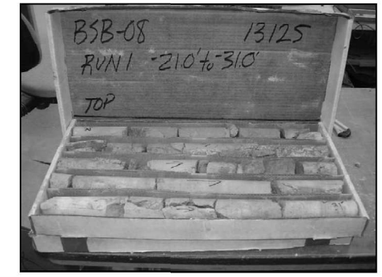

Color pictures of the cores Yes Cores will be stored for examination for --
The "Strength" column represents the uniaxial compressive strength of the core sample (ASTM D-2938)

Notes:
1. For location of soil boring, see Sheet SA-1.

MODEL: SHEET
FILE NAME: C:\TRANSYSTEMS\PW_LOCAL\TRANSYSTEMS-PW-01\DMS20864\0990902_0903-62F94-108-BORING15.DGN

HNTB

USER NAME =	DESIGNED - MVV	REVISED -	
	CHECKED - APC	REVISED -	
PLOT SCALE =	DRAWN - LK	REVISED -	
PLOT DATE =	CHECKED - MVV	REVISED -	

STATE OF ILLINOIS
DEPARTMENT OF TRANSPORTATION

SOIL BORING LOGS 15
STRUCTURE NOS. 099-0902 (EB) & 099-0903 (WB)
SHEET SA-107 OF SA-112 SHEETS

F.A.I. RTE.	SECTION	COUNTY	TOTAL SHEETS	SHEET NO.
80	2017-057F	WILL	1342	771
		CONTRACT NO. 62F94		
	ILLINOIS	FED. AID PROJECT		

10-27-2025, 16:51:53

Geo Services, Inc.
Geotechnical, Environmental & Civil Engineering
805 Amherst Court, Suite 204
Naperville, Illinois 60565
(630) 355-2838

SOIL BORING LOG

GSI Job No. 13125
Page 1 of 1
Date 10/22/13

ROUTE F.A.I RTE. 80 DESCRIPTION I-80 Phase II (Near Term) LOGGED BY TZ
SECTION LOCATION SW 1/4, SEC. 15, TWP. T35N, RNG. R10E, 3rd PM
COUNTY Will DRILLING METHOD Hollow Stem Auger/Rotary HAMMER TYPE CME Automatic

STRUCT. NO.
Station
BORING NO. BSB-10
Station 713+67
Offset 7.70ft Right
Ground Surface Elev. 531.90 ft

Surface Water Elev. n/a ft
Stream Bed Elev. n/a ft
Groundwater Elev.:
First Encounter 518.4 ft ▼
Upon Completion n/a ft
After ___ Hrs. ___ ft

Description	Elev.	DEPTH (ft)	BLOWS (/6")	UCS Qu (tsf)	MOIST (%)
SANDY CLAY LOAM-dark brown to black (Fill)			3		
			4		15
			5		
	528.90				
SAND, GRAVEL & COBBLES-black-very loose (Fill)			2		
			2		9
		-5	2		
	526.40				
SAND, GRAVEL & FRACTURE ROCK-brown			6		
			14		6
			26		
			6		
			16		5
		-10	21		
			18		
			19		6
			23		
	518.90				
SAND & GRAVEL-brown ▼			13		
			17		9
		-15	13		
			50/5"		
					7
	514.40				
Borehole continued with rock coring.					
		-20			

The Unconfined Compressive Strength (UCS) Failure Mode is indicated by (B-Bulge, S-Shear, P-Penetrometer)
The SPT (N value) is the sum of the last two blow values in each sampling zone (AASHTO T206)

BBS, from 137 (Rev. 8-99)

Z:\PROJECTS\2013\13125 HNTB, I-80 PHASE II (NEAR TERM)\13125 BORING LOGS\13125_LOG.GPJ 6/19/14

Geo Services, Inc.
Geotechnical, Environmental & Civil Engineering
805 Amherst Court, Suite 204
Naperville, Illinois 60565
(630) 355-2838

ROCK CORE LOG

PAGE 1 of 2
DATE 10/22/2013
LOGGED BY JK
GSI JOB No. 13125

ROUTE -- DESCRIPTION I-80 Reconstruction (Near Term Phase 2)
SECTION -- LOCATION SEC 15, T35N, R10E, SW 1/4, 3rd PM
COUNTY Will CORING METHOD Rotary Wash
STRUCT. NO. -- CORING BARREL TYPE & SIZE NX Double Swivel-10 ft
Station --
BORING NO. BSB-10 Core Diameter 2.0 in
Station 713+67 Top of Rock Elev. 514.4
Offset 7.7' Right Begin Core Elev. 514.4
Ground Surface Elev. 531.9

Description	DEPTH (ft)	CORE RUN (#)	RECOVERY (%)	R.Q.D. (%)	CORE TIME (min/ft)	STRENGTH (tsf)
SILURIAN SYSTEM, NIAGARAN SERIES DOLOMITE RUN 1 (−17.5' to −19.5') Light gray, cherty, & highly weathered & fractured throughout.	-19.5	1	100.0	0.0	n/a	n/a
(19.5' to −21.0') Roller Bit Drillers Observation: Weathered & fractured rock.	-21.0					
RUN 2 (−21.0' to −29.0') Light gray to gray with horizontal to wavy bedding & chert nodules throughout. Highly weathered & fractured from −21.0' to −23.0' & from −27.0' to −29.0'. Clay seams from −27.0' to −29.0'.		2	93.8	45.0	n/a	337 ● -24.5'

Color pictures of the cores Yes Cores will be stored for examination for —
The "Strength" column represents the uniaxial compressive strength of the core sample (ASTM D-2938)

Geo Services, Inc.
Geotechnical, Environmental & Civil Engineering
805 Amherst Court, Suite 204
Naperville, Illinois 60565
(630) 355-2838

ROCK CORE LOG

PAGE 2 of 2
DATE 10/22/2013
LOGGED BY JK
GSI JOB No. 13125

ROUTE -- DESCRIPTION I-80 Reconstruction (Near Term Phase 2)
SECTION -- LOCATION SEC 15, T35N, R10E, SW 1/4, 3rd PM
COUNTY Will CORING METHOD Rotary Wash
STRUCT. NO. -- CORING BARREL TYPE & SIZE NX Double Swivel-10 ft
Station --
BORING NO. BSB-10 Core Diameter 2.0 in
Station 713+67 Top of Rock Elev. 514.4
Offset 7.7' Right Begin Core Elev. 514.4
Ground Surface Elev. 531.9

Description	DEPTH (ft)	CORE RUN (#)	RECOVERY (%)	R.Q.D. (%)	CORE TIME (min/ft)	STRENGTH (tsf)
SILURIAN SYSTEM, NIAGARAN SERIES DOLOMITE RUN 3 (−29.0' to −31.0') Light gray & highly weathered. Highly fractured with clay seams throughout.	-31	3	100.0	0.0	n/a	n/a

Color pictures of the cores Yes Cores will be stored for examination for —
The "Strength" column represents the uniaxial compressive strength of the core sample (ASTM D-2938)

Notes:
1. For location of soil boring, see Sheet SA-1.

MODEL: SHEET
FILE NAME: C:\TRANSYSTEMS\PW_LOCAL\TRANSYSTEMS-PW-01\DMS20864\0990902_0903-62F94-109-BORING16.DGN
10-27-2025, 16:51:58

HNTB

USER NAME =	DESIGNED - MVV	REVISED -	
	CHECKED - APC	REVISED -	
PLOT SCALE =	DRAWN - LK	REVISED -	
PLOT DATE =	CHECKED - MVV	REVISED -	

STATE OF ILLINOIS
DEPARTMENT OF TRANSPORTATION

SOIL BORING LOGS 16
STRUCTURE NOS. 099-0902 (EB) & 099-0903 (WB)
SHEET SA-108 OF SA-112 SHEETS

F.A.I. RTE.	SECTION	COUNTY	TOTAL SHEETS	SHEET NO.
80	2017-057F	WILL	1342	772
		CONTRACT NO. 62F94		
	ILLINOIS	FED. AID PROJECT		

Geo Services, Inc.
Geotechnical, Environmental & Civil Engineering
805 Amherst Court, Suite 204
Naperville, Illinois 60565
(630) 355-2838

SOIL BORING LOG

GSI Job No. 13125
Page 1 of 1
Date 10/30/13

ROUTE F.A.I RTE. 80 DESCRIPTION I-80 Phase II (Near Term) LOGGED BY TZ
SECTION LOCATION SW 1/4, SEC. 15, TWP. T35N, RNG. R10E, 3rd PM
COUNTY Will DRILLING METHOD Hollow Stem Auger/Rotary HAMMER TYPE CME Automatic

STRUCT. NO.
Station
BORING NO. BSB-12
Station 714+21
Offset 67.50ft Right
Ground Surface Elev. 533.40 ft

Surface Water Elev. n/a ft
Stream Bed Elev. n/a ft
Groundwater Elev.:
First Encounter 517.9 ft ▼
Upon Completion n/a ft
After ___ Hrs. ___ ft

Description	Elev.	DEPTH (ft)	BLOWS (/6")	UCS Qu (tsf)	MOIST (%)
12.0" SANDY TOPSOIL	532.40				15
CRUSHED STONE, GRAVEL,SAND & CINDERS-black-medium dense to dense (Fill)			4		
			6		11
			7		
			3		
			5		23
		-5	5		
			12		
			16		15
			20		
			5		
			7		21
		-10	10		
SAND, GRAVEL & FRACTURED ROCK-brown-medium dense to very dense	522.90				
			7		
			8		16
			10		
			15		
			22		7
		-15	24		
			13		
			15		7
			19		
			19		
			50/3"		10
		-20			

Description	Elev.	DEPTH (ft)	BLOWS (/6")	UCS Qu (tsf)	MOIST (%)
Borehole continued with rock coring.	512.40				
		-25			
		-30			
		-35			
		-40			

The Unconfined Compressive Strength (UCS) Failure Mode is indicated by (B-Bulge, S-Shear, P-Penetrometer)
The SPT (N value) is the sum of the last two blow values in each sampling zone (AASHTO T206)

BBS, from 137 (Rev. 8-99)

Geo Services, Inc.
Geotechnical, Environmental & Civil Engineering
805 Amherst Court, Suite 204
Naperville, Illinois 60565
(630) 355-2838

ROCK CORE LOG

PAGE 1 of 1
DATE 10/30/2013
LOGGED BY JK
GSI JOB No. 13125

ROUTE --
SECTION --
COUNTY Will
STRUCT. NO. --
Station --
BORING NO. BSB-12
Station 714+21
Offset 67.5' Right
Ground Surface Elev. 533.4

DESCRIPTION I-80 Reconstruction (Near Term Phase 2)
LOCATION SEC 15, T35N, R10E, SW 1/4, 3rd PM
CORING METHOD Rotary Wash
CORING BARREL TYPE & SIZE NX Double Swivel-10 ft
Core Diameter 2.0 in
Top of Rock Elev. 512.4
Begin Core Elev. 512.4

Description	DEPTH (ft)	CORE RUN (#)	RECOVERY (%)	R.Q.D. (%)	CORE TIME (min/ft)	STRENGTH (tsf)
SILURIAN SYSTEM, NIAGARAN SERIES DOLOMITE RUN 1 (-21.0' to -31.0') Light gray with rust staining & horizontal fractures throughout, becoming highly weathered & fractured with intersecting vertical fractures & clay seams from -26.2' to -31.0'.		1	97.0	32	n/a	561 @ -23.5'
	-26					
	-31					

Color pictures of the cores Yes Cores will be stored for examination for --
The "Strength" column represents the uniaxial compressive strength of the core sample (ASTM D-2938)

Geo Services, Inc.
Geotechnical, Environmental & Civil Engineering
805 Amherst Court, Suite 204
Naperville, Illinois 60565
(630) 355-2838

SOIL BORING LOG

GSI Job No. 13125
Page 1 of 1
Date 10/21/13

ROUTE F.A.I RTE. 80 DESCRIPTION I-80 Phase II (Near Term) LOGGED BY TZ
SECTION LOCATION SW 1/4, SEC. 15, TWP. T35N, RNG. R10E, 3rd PM
COUNTY Will DRILLING METHOD Hollow Stem Auger/Rotary HAMMER TYPE CME Automatic

STRUCT. NO.
Station
BORING NO. BSB-14
Station 714+93
Offset 11.00ft Right
Ground Surface Elev. 533.20 ft

Surface Water Elev. n/a ft
Stream Bed Elev. n/a ft
Groundwater Elev.:
First Encounter 519.7 ft ▼
Upon Completion n/a ft
After ___ Hrs. ___ ft

Description	Elev.	DEPTH (ft)	BLOWS (/6")	UCS Qu (tsf)	MOIST (%)
4.0" CONCRETE	532.87				
CLAY LOAM-dark brown & black-very stiff (Fill)			5		
			6	3.0	19
			7	P	
CLAYEY GRAVEL & STONE-dark brown & black-medium dense (Fill)	530.20				
			4		
			5		12
		-5	6		
CLAY LOAM-dark brown & black-dense (Fill)	527.70				
			15		
			17		18
			20		
SILTY CLAY-dark brown to black-very stiff	525.20				
			2		
			3	2.5	26
		-10	4	P	
SILTY LOAM-brown-medium dense	522.70				
			7		
			11		18
			15		
SAND, GRAVEL & FRACTURE ROCK-brown & gray-very dense	520.20				
			19		
			20		10
		-15	23		
			26		
			50/3"		8
			21		
			50/4"		12
		-20			

Description	Elev.	DEPTH (ft)	BLOWS (/6")	UCS Qu (tsf)	MOIST (%)
SAND, GRAVEL & FRACTURE ROCK-brown & gray-very dense *(continued)*	512.20				
			50/2"		
Drillers Observation: Apparent bedrock	510.70				
Borehole continued with rock coring.					
		-25			
		-30			
		-35			
		-40			

The Unconfined Compressive Strength (UCS) Failure Mode is indicated by (B-Bulge, S-Shear, P-Penetrometer)
The SPT (N value) is the sum of the last two blow values in each sampling zone (AASHTO T206)

BBS, from 137 (Rev. 8-99)

Notes:
1. For location of soil boring, see Sheet SA-1.

Geo Services, Inc.
Geotechnical, Environmental & Civil Engineering
805 Amherst Court, Suite 204
Naperville, Illinois 60565
(630) 355-2838

ROCK CORE LOG

PAGE 1 of 1
DATE 10/21/2013
LOGGED BY JK
GSI JOB No. 13125

ROUTE --
DESCRIPTION I-80 Reconstruction (Near Term Phase 2)
SECTION --
LOCATION SEC 15, T35N, R10E, SW 1/4, 3rd PM
COUNTY Will
CORING METHOD Rotary Wash
STRUCT. NO. --
Station --
CORING BARREL TYPE & SIZE NX Double Swivel-10 ft
Core Diameter 2.0 in
Top of Rock Elev. 512.2
Begin Core Elev. 510.7
BORING NO. BSB-14
Station 714+93
Offset 11.0' Right
Ground Surface Elev. 533.2

DEPTH (ft)	CORE RUN (#)	RECOVERY (%)	R.Q.D. (%)	CORE TIME (min/ft)	STRENGTH (tsf)
	1	99.8	39.0	n/a	1452 -29.7

SILURIAN SYSTEM, NIAGARAN SERIES DOLOMITE
RUN 1 (-22.5' to -32.5')
Light gray & fine grained with horizontal bedding. Weathered with numerous horizontal fractures throughout. Clay seams from -22.9' to -23.7', -25.0' to -25.4', -26.4' to -28.1' & from -28.4' to -28.6'.

-27.5

-32.5

Color pictures of the cores Yes Cores will be stored for examination for --
The "Strength" column represents the uniaxial compressive strength of the core sample (ASTM D-2938)

Geo Services, Inc.
Geotechnical, Environmental & Civil Engineering
805 Amherst Court, Suite 204
Naperville, Illinois 60565
(630) 355-2838

SOIL BORING LOG

GSI Job No. 13125
Page 1 of 2
Date 3/19/14

ROUTE F.A.I RTE. 80 DESCRIPTION I-80 Phase II (Near Term) LOGGED BY JH
SECTION LOCATION SW 1/4, SEC. 15, TWP. T35N, RNG. R10E, 3rd PM
COUNTY Will DRILLING METHOD Hollow Stem Auger/Rotary HAMMER TYPE CME Automatic

STRUCT. NO.
Station
BORING NO. BSB-16
Station 715+78
Offset 50.70ft Right
Ground Surface Elev. 575.30 ft

Surface Water Elev. n/a ft
Stream Bed Elev. n/a ft
Groundwater Elev.:
First Encounter 572.3 ft
Upon Completion n/a ft
After ___ Hrs. ___ ft

Description	Elev.	DEPTH (ft)	BLOWS (/6")	UCS Qu (tsf)	MOIST (%)
5.0" ASPHALT, 12.0" CONCRETE					
	573.88		1		
CRUSHED STONE-very loose			2		12
			2		
	571.30		1		
CLAY to CLAY LOAM-brown & gray-stiff to hard (Fill)		-5	2	1.5	14
			2	P	
			3		
			2	1.8	22
			3	B	
			1		
			3	1.5	19
		-10	3	P	
			2		
			3	1.0	22
			3	P	
			3		
			3	1.5	20
		-15	6	B	
			3		
			5	2.1	19
			6	B	
			2		
			4	1.3	22
		-20	6	P	

Description	Elev.	DEPTH (ft)	BLOWS (/6")	UCS Qu (tsf)	MOIST (%)
CLAY to CLAY LOAM-brown & gray-stiff to hard (Fill) *(continued)*					
			3		
			4	2.5	21
			7	B	
			3		
			5	1.5	16
		-25	6	B	
			4		
			5	4.0	16
			7	P	
			5		
			5	2.7	17
		-30	6	B	
			8		
			10		18
		-35	14		
			8		
			14	3.3	17
		-40	17	B	

The Unconfined Compressive Strength (UCS) Failure Mode is indicated by (B-Bulge, S-Shear, P-Penetrometer)
The SPT (N value) is the sum of the last two blow values in each sampling zone (AASHTO T206)
BBS, from 137 (Rev. 8-99)

Z:\PROJECTS\20131125\HNTB_I80 PHASE II (NEAR TERM)\13125 BORING LOGS\13125_LOG.GPJ 6/3/14

Geo Services, Inc.
Geotechnical, Environmental & Civil Engineering
805 Amherst Court, Suite 204
Naperville, Illinois 60565
(630) 355-2838

SOIL BORING LOG

GSI Job No. 13125
Page 2 of 2
Date 3/19/14

ROUTE F.A.I RTE. 80 DESCRIPTION I-80 Phase II (Near Term) LOGGED BY JH
SECTION LOCATION SW 1/4, SEC. 15, TWP. T35N, RNG. R10E, 3rd PM
COUNTY Will DRILLING METHOD Hollow Stem Auger/Rotary HAMMER TYPE CME Automatic

STRUCT. NO.
Station
BORING NO. BSB-16
Station 715+78
Offset 50.70ft Right
Ground Surface Elev. 575.30 ft

Surface Water Elev. n/a ft
Stream Bed Elev. n/a ft
Groundwater Elev.:
First Encounter 572.3 ft
Upon Completion n/a ft
After ___ Hrs. ___ ft

Description	Elev.	DEPTH (ft)	BLOWS (/6")	UCS Qu (tsf)	MOIST (%)
CLAY to CLAY LOAM-brown & gray-stiff to hard (Fill) *(continued)*					
			7		
			8	1.9	21
		-45	11	B	
	526.30		18		
SILTY LOAM-dark brown-stiff (A-6)			6	1.9	31
		-50	8	B	
	523.30				
SANDY CLAY LOAM-brown-medium dense			5		
			4		23
		-55	6		
	518.30				
Drillers Observation: Cobbles & Boulders	517.80				
Drillers Observation: Apparent Bedrock					
	515.30	-60			

Borehole continued with rock coring

The Unconfined Compressive Strength (UCS) Failure Mode is indicated by (B-Bulge, S-Shear, P-Penetrometer)
The SPT (N value) is the sum of the last two blow values in each sampling zone (AASHTO T206)
BBS, from 137 (Rev. 8-99)

Z:\PROJECTS\20131125\HNTB_I80 PHASE II (NEAR TERM)\13125 BORING LOGS\13125_LOG.GPJ 6/3/14

Notes:
1. For location of soil boring, see Sheet SA-1.

MODEL: SHEET
FILE NAME: C:\TRANSYSTEMS\PW_LOCAL\TRANSYSTEMS-PW-01\DMS20864\0990902_0903-62F94-111-BORING18.DGN

HNTB

USER NAME =	DESIGNED - MVV	REVISED -	
	CHECKED - APC	REVISED -	
PLOT SCALE =	DRAWN - LK	REVISED -	
PLOT DATE =	CHECKED - MVV	REVISED -	

STATE OF ILLINOIS
DEPARTMENT OF TRANSPORTATION

SOIL BORING LOGS 18
STRUCTURE NOS. 099-0902 (EB) & 099-0903 (WB)
SHEET SA-110 OF SA-112 SHEETS

F.A.I. RTE.	SECTION	COUNTY	TOTAL SHEETS	SHEET NO.
80	2017-057F	WILL	1342	774
		CONTRACT NO. 62F94		
	ILLINOIS	FED. AID PROJECT		

10-27-2025, 16:52:06

Geo Services, Inc.
Geotechnical, Environmental & Civil Engineering
805 Amherst Court, Suite 204
Naperville, Illinois 60565
(630) 355-2838

ROCK CORE LOG

PAGE 1 of 1
DATE 3/20/2014
LOGGED BY MD
GSI JOB No. 13125

ROUTE -- DESCRIPTION I-80 Reconstruction (Near Term Phase 2)
SECTION -- LOCATION SEC 15, T35N, R10E, SW 1/4, 3rd PM
COUNTY Will CORING METHOD Rotary Wash
STRUCT. NO. -- CORING BARREL TYPE & SIZE NX Double Swivel-10 ft
Station --
Core Diameter 2.0 in
BORING NO. BSB-16 Top of Rock Elev. 517.8
Station 715+78 Begin Core Elev. 515.3
Offset 50.7' Right
Ground Surface Elev. 575.3

	DEPTH (ft)	CORE RUN (#)	RECOVERY (%)	R.Q.D. (%)	CORE TIME (min/ft)	STRENGTH (tsf)
SILURIAN SYSTEM, NIAGARAN SERIES DOLOMITE RUN 1 (-60.0' to -70.0') Light gray & porous with horizontal bedding. Some horizontal fractures.	-65 -70	1	98.0	81.0	n/a	876 @ -62.1'

Color pictures of the cores Yes Cores will be stored for examination for --
The "Strength" column represents the uniaxial compressive strength of the core sample (ASTM D-2938)

Geo Services, Inc.
Geotechnical, Environmental & Civil Engineering
805 Amherst Court, Suite 204
Naperville, Illinois 60565
(630) 355-2838

SOIL BORING LOG

GSI Job No. 13125
Page 1 of 2
Date 6/2/15

ROUTE F.A.I RTE. 80 DESCRIPTION I-80 Phase II (Near Term) LOGGED BY NW
SECTION 2013-008B & 2013-009B LOCATION SW 1/4, SEC. 15, TWP. T35N, RNG. R10E, 3rd PM
COUNTY Will DRILLING METHOD Hollow Stem Auger/Rotary HAMMER TYPE Diedrich Automatic

STRUCT. NO.
Station
BORING NO. BSB-53
Station 716+17
Offset 4.30ft Right
Ground Surface Elev. 573.70 ft

Surface Water Elev. n/a ft
Stream Bed Elev. n/a ft
Groundwater Elev.:
First Encounter Dry to 10.0' ft
Upon Completion n/a ft
After Hrs. ft

Blind drill to -41.0'.	DEPTH (ft)	BLOWS (/6")	UCS Qu (tsf)	MOIST (%)
	-5			
	-10			
	-15			
	-20			

Blind drill to -41.0'. *(continued)*	DEPTH (ft)	BLOWS (/6")	UCS Qu (tsf)	MOIST (%)
	-25			
	-30			
	-35			
	-40			

The Unconfined Compressive Strength (UCS) Failure Mode is indicated by (B-Bulge, S-Shear, P-Penetrometer)
The SPT (N value) is the sum of the last two blow values in each sampling zone (AASHTO T206)

BBS, from 137 (Rev. 8-99)

Z:\PROJECTS\2013\13125 HNTB_I-80 PHASE II (NEAR TERM)\13125 BORING LOGS\ 3125_LOG.GPJ 6/11/15

Geo Services, Inc.
Geotechnical, Environmental & Civil Engineering
805 Amherst Court, Suite 204
Naperville, Illinois 60565
(630) 355-2838

SOIL BORING LOG

GSI Job No. 13125
Page 2 of 2
Date 6/2/15

ROUTE F.A.I RTE. 80 DESCRIPTION I-80 Phase II (Near Term) LOGGED BY NW
SECTION 2013-008B & 2013-009B LOCATION SW 1/4, SEC. 15, TWP. T35N, RNG. R10E, 3rd PM
COUNTY Will DRILLING METHOD Hollow Stem Auger/Rotary HAMMER TYPE Diedrich Automatic

STRUCT. NO.
Station
BORING NO. BSB-53
Station 716+17
Offset 4.30ft Right
Ground Surface Elev. 573.70 ft

Surface Water Elev. n/a ft
Stream Bed Elev. n/a ft
Groundwater Elev.:
First Encounter Dry to 10.0' ft
Upon Completion n/a ft
After Hrs. ft

Blind drill to -41.0'. *(continued)*	DEPTH (ft)	BLOWS (/6")	UCS Qu (tsf)	MOIST (%)
532.70				
CLAY LOAM-dark brown & gray-hard (Fill)		10 11 16	4.2 B	18
530.70				
SAND, GRAVEL, CINDERS & STONE-black-dense (Fill)		28		
529.20		13		12
& GRAVEL-dark brown & gray-medium dense (Fill)	-45	22		
		12		
		13 14		8
525.70				
TOPSOIL-black Organic Content = 6.7%		5 6	1.4	35
	-50	12	B	
523.20				
SILTY CLAY LOAM with Gravel-dark brown & gray spotted black-medium stiff		6 6 9		26
520.70				
SAND, GRAVEL & FRACTURED ROCK-brown-very dense		25		
	-55	22 39		10
		35		
		34 28		10
515.70				
SANDY LOAM with Fractured Rock-gray-very dense		33		
	-60	27 21		13

	DEPTH (ft)	BLOWS (/6")	UCS Qu (tsf)	MOIST (%)
513.20				
FRACTURED ROCK-gray-very dense		50/5"		
511.70				8
Drillers Observation: Possible Bedrock				
510.70				
End Of Boring @ -63.0'. Boring backfilled with cuttings				
	-65			
	-70			
	-75			
	-80			

The Unconfined Compressive Strength (UCS) Failure Mode is indicated by (B-Bulge, S-Shear, P-Penetrometer)
The SPT (N value) is the sum of the last two blow values in each sampling zone (AASHTO T206)

BBS, from 137 (Rev. 8-99)

Z:\PROJECTS\2013\13125 HNTB_I-80 PHASE II (NEAR TERM)\13125 BORING LOGS\ 3125_LOG.GPJ 6/11/15

Notes:
1. For location of soil boring, see Sheet SA-1.

MODEL: SHEET
FILE NAME: C:\TRANSYSTEMS\PW_LOCAL\TRANSYSTEMS-PW-01\DMS20864\09990902_0903-62F94-112-BORING19.DGN

HNTB

USER NAME =	DESIGNED - MVV	REVISED -	
	CHECKED - APC	REVISED -	
PLOT SCALE =	DRAWN - LK	REVISED -	
PLOT DATE =	CHECKED - MVV	REVISED -	

STATE OF ILLINOIS
DEPARTMENT OF TRANSPORTATION

SOIL BORING LOGS 19
STRUCTURE NOS. 099-0902 (EB) & 099-0903 (WB)
SHEET SA-111 OF SA-112 SHEETS

F.A.I. RTE.	SECTION	COUNTY	TOTAL SHEETS	SHEET NO.
80	2017-057F	WILL	1342	775
		CONTRACT NO. 62F94		
	ILLINOIS	FED. AID PROJECT		

10-27-2025, 16:52:10

Geo Services, Inc.
Geotechnical, Environmental & Civil Engineering
805 Amherst Court, Suite 204
Naperville, Illinois 60563
(630) 355-2935

SOIL BORING LOG

GEO Job No. 13125
Page 1 of 2
Date 3/3/22

ROUTE F.A.I RTE. 80 DESCRIPTION I-80 Phase II (Near Term) LOGGED BY MM
SECTION (TBD) LOCATION SW 1/4, SEC. 15, TWP. T35N, RNG. R30E, 3rd PM
COUNTY Will DRILLING METHOD Hollow Stem Auger/Rotary HAMMER TYPE CME Automatic

STRUCT. NO. -
Station -
BORING NO. BSB-055
Station 709+71
Offset 62.20ft Right
Ground Surface Elev. 574.80 ft

Surface Water Elev. n/a ft
Stream Bed Elev. n/a ft
Groundwater Elev.:
First Encounter Dry to -10.0' ft
Upon Completion n/a ft
After - Hrs. - ft

Description	Elev.	DEPTH (ft)	BLOWS (/6")	UCS Qu (tsf)	MOIST (%)	DRY DENSITY (pcf)
6.0" ASPHALT, 6.0" CRUSHED STONE	573.80					
CLAY LOAM-brown & gray-very stiff to hard (Fill)			5			
			3 3	2.50 P	2	
			3			
		-5	6 8	3.00 P	12	
			3			
			4 8	4.50 P	18	
			6			
		-10	14 9	2.50 P	12	
CLAYEY GRAVEL & STONE-brown & gray-medium dense (Fill)	564.30		10			
			5 7		20	
CLAY LOAM-brown-stiff to very stiff (Fill)	561.80		7			
		-15	6 7	3.50 P	15	
			2			
			3 5	1.30 R	22	
			8			
		-20	10 14	3.00 P	31	
CLAY LOAM-brown-stiff to very stiff (Fill) *(continued)*						
			6			
			7 9	2.20 B	17	
			7			
		-25	11 16	2.75 P	13	
			4			
			6 12	2.50 P	18	
			4			
		-30	4 8	3.50 P	13	
			9			
		-35	12 15	3.00 P	17	
SILTY CLAY LOAM-gray-very stiff	537.80		10			
		-40	10 15		14	

The Unconfined Compressive Strength (UCS) Failure Mode is indicated by (B-Bulge, S-Shear, P-Penetrometer)
The SPT (N value) is the sum of the last two blow values in each sampling zone (AASHTO T206), GP-Geoprobe Hand Auger
BBS, from 137 (Rev. 8-99)

Z:\PROJECTS\2013\13125-HNTB, I-80 PHASE II (NEAR TERM)\13125 BORING LOGS\13125_LOG GP-1 5/4/22

Geo Services, Inc.
Geotechnical, Environmental & Civil Engineering
805 Amherst Court, Suite 204
Naperville, Illinois 60563
(630) 355-2935

SOIL BORING LOG

GEO Job No. 13125
Page 2 of 2
Date 3/3/22

ROUTE F.A.I RTE. 80 DESCRIPTION I-80 Phase II (Near Term) LOGGED BY MM
SECTION (TBD) LOCATION SW 1/4, SEC. 15, TWP. T35N, RNG. R30E, 3rd PM
COUNTY Will DRILLING METHOD Hollow Stem Auger/Rotary HAMMER TYPE CME Automatic

STRUCT. NO. -
Station -
BORING NO. BSB-055
Station 709+71
Offset 62.20ft Right
Ground Surface Elev. 574.80 ft

Surface Water Elev. n/a ft
Stream Bed Elev. n/a ft
Groundwater Elev.:
First Encounter Dry to -10.0' ft
Upon Completion n/a ft
After - Hrs. - ft

Description	Elev.	DEPTH (ft)	BLOWS (/6")	UCS Qu (tsf)	MOIST (%)	DRY DENSITY (pcf)
SILTY CLAY LOAM-gray-very stiff *(continued)*						
	532.80					
SAND, GRAVEL & FRACTURED ROCK-gray-dense to very dense						
			19			
		-45	21 22		6	
			17			
		-50	15 35		7	
			33			
		-55	39 50/5"		8	
			20			
		-60	19 15		12	
SAND, GRAVEL & FRACTURED ROCK-gray-dense to very dense *(continued)*						
		-65	50/4"		5	
Diller observation-apparent bedrock	509.30					
Borehole continued with rock coring.		-70				
		-75				
		-80				

The Unconfined Compressive Strength (UCS) Failure Mode is indicated by (B-Bulge, S-Shear, P-Penetrometer)
The SPT (N value) is the sum of the last two blow values in each sampling zone (AASHTO T206), GP-Geoprobe Hand Auger
BBS, from 137 (Rev. 8-99)

Z:\PROJECTS\2013\13125-HNTB, I-80 PHASE II (NEAR TERM)\13125 BORING LOGS\13125_LOG GP-1 5/4/22

Geo Services, Inc.
Geotechnical, Environmental & Civil Engineering
805 Amherst Court, Suite 204
Naperville, Illinois 60563
(630) 355-2935

ROCK CORE LOG

GEO Job No. 13125
Page 1 of 1
Date 3/3/22

ROUTE F.A.I RTE. 80 DESCRIPTION I-80 Phase II (Near Term) LOGGED BY MM
SECTION (TBD) LOCATION SW 1/4, SEC. 15, TWP. T35N, RNG. R30E, 3rd PM
COUNTY Will CORING METHOD Rotary Wash

STRUCT. NO. -
Station -
BORING NO. BSB-055
Station 709+71
Offset 62.20ft Right
Ground Surface Elev. 574.80 ft

CORING BARREL TYPE & SIZE NX Double Swivel-10 ft
Core Diameter 2 in
Top of Rock Elev. 509.30 ft
Begin Core Elev. 509.30 ft

Description	Elev.	DEPTH (ft)	CORE (#)	RECOVERY (%)	R.Q.D. (%)	CORE TIME (min/ft)	STRENGTH (tsf)
RUN 1 (-65.5' to -70.0') SILURIAN SYSTEM, NIAGARAN SERIES DOLOMITE Light gray & fine grained with horizontal bedding. Some horizontal fractures & rust staining throughout.	509.30		1	71	50		720.00
	504.80	-70					
RUN 2 (-70.0' to -80.0') SILURIAN SYSTEM, NIAGARAN SERIES DOLOMITE Light gray & porous with horizontal bedding. Highly weathered & fractured throughout.			2	82	12		571.00
		-75					
	494.80	-80					
End Of Boring @ -80.0'. Boring backfilled with cuttings.							
		-85					

Color pictures of the cores Yes
Cores will be stored for examination until 5 yrs after const.
The "Strength" column represents the uniaxial compressive strength of the core sample (ASTM D-2938)
BBS, form 138 (Rev. 8-99)

Notes:
1. For location of soil boring, see Sheet SA-1.

MODEL: SHEET
FILE NAME: C:\TRANSYSTEMS\PW_LOCAL\TRANSYSTEMS-PW-01\DMS20864\0990902_0903-62F94-113-BORING20.DGN

10-27-2025, 16:52:14

HNTB

USER NAME =	DESIGNED - MVV	REVISED -	
	CHECKED - APC	REVISED -	
PLOT SCALE =	DRAWN - LK	REVISED -	
PLOT DATE =	CHECKED - MVV	REVISED -	

STATE OF ILLINOIS
DEPARTMENT OF TRANSPORTATION

SOIL BORING LOGS 20
STRUCTURE NOS. 099-0902 (EB) & 099-0903 (WB)
SHEET SA-112 OF SA-112 SHEETS

F.A.I. RTE.	SECTION	COUNTY	TOTAL SHEETS	SHEET NO.
80	2017-057F	WILL	1342	776
		CONTRACT NO. 62F94		
		ILLINOIS	FED. AID PROJECT	

Benchmark: Chiseled 'X' on top of east bolt of fire hydrant at east ROW of S. Eastern Ave. and WB ramp to I-80. Elev. 538.265

Existing Structures: S.N 099-0059 (EB) and 099-0058 (WB) were originall constructed in 1967 under F.I.A. Route 80 Project I-80-4(31)134 Section 99-4HB. Various repairs were made to the structure in 1987, 1988, and 2003. The existing structures are 3 spans, of length 34'-7", 97'-10¼", and 43'-6" respectively, measuring 179'-7¼" from back to back of abutments with a skew of 7°46'20" right forward. The WB deck tapers from 65'-4" to 61'-9" while the EB deck tapers from 65'-0" to 61'-6". The structure is a concrete deck on steel girders and is supported on concrete stub abutments and trapezoidal column piers. The structure will be removed and replaced.

Traffic on I-80 shall be maintained utilizing median crossover for staged construction. Traffic on existing Chicago St. shall be detoured to newly constructed Ramp B.

Salvage: None

LEGEND

- Soil Borings
- Exist. Storm Sewer
- Exist. Fiber Optic
- Exist. Underground Electric
- Exist. Underground Telephone
- Prop. Lighting Cable in Duct
- Prop. Storm Sewer
- Prop. Underground Electric
- Prop. Underground Conduit
- Prop. Interconnect Conduit
- Approximate Limits of Reinforced Soil Mass

** Out-to-Out dimensions are taken at intersection of back of abutment (Sta. 706+14.87 & Sta. 707+53.54) and ℄ I-80.

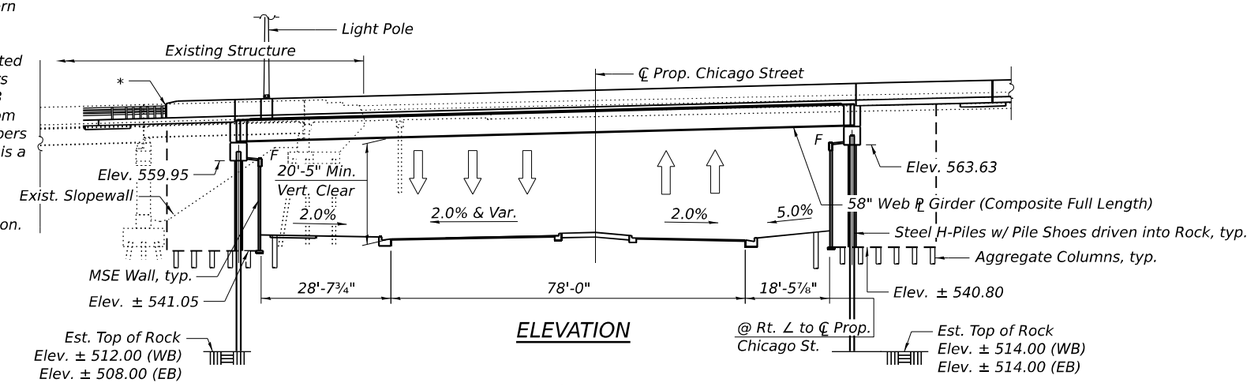

ELEVATION

* Traffic Barrier Terminal
Std. 631031, Type 6 (Approach End)
Std. 631026, Type 5 (Departing End)

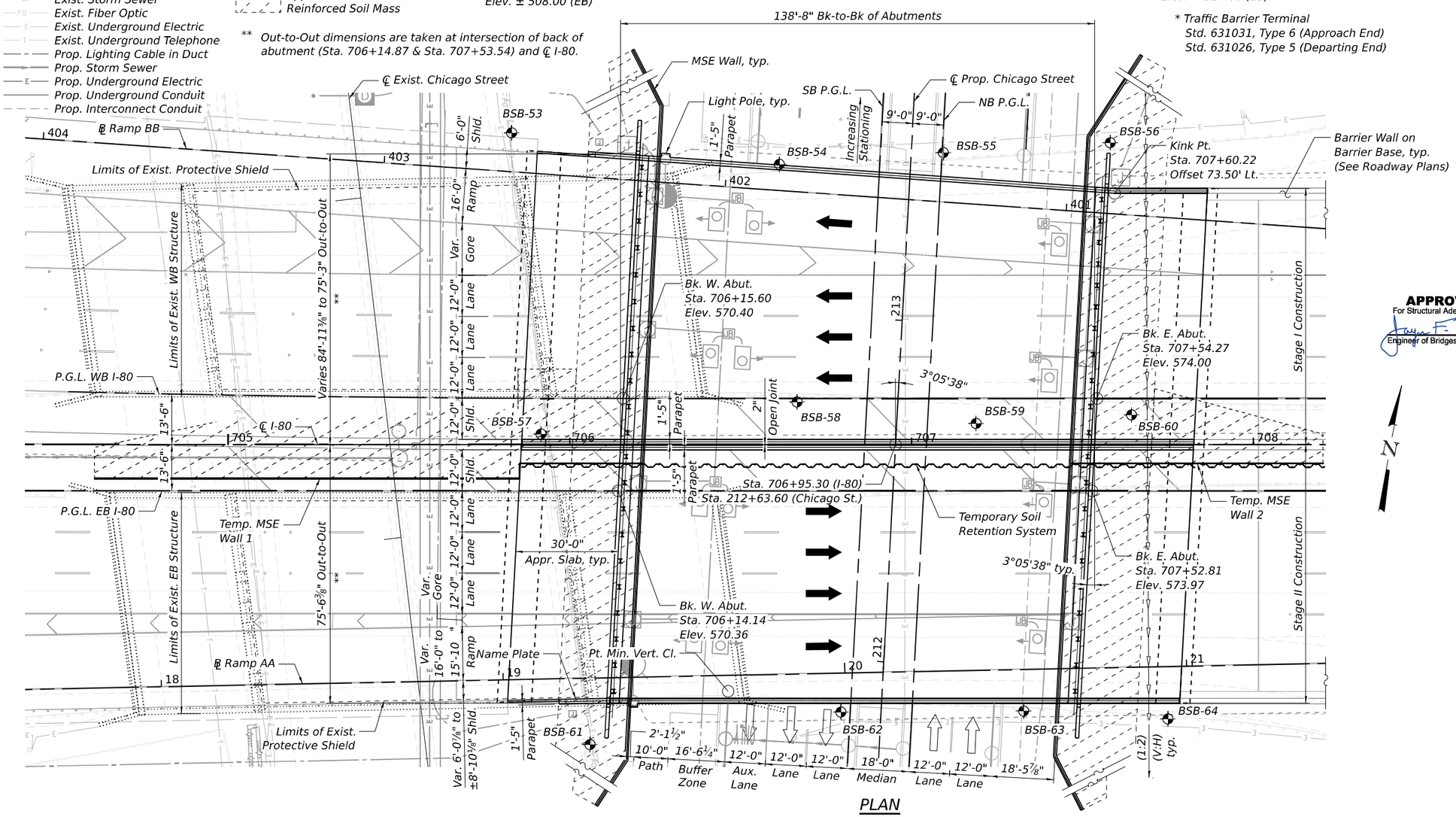

PLAN

SEISMIC DATA

Seismic Performance Zone (SPZ) = 1
Design Spectral Acceleration at 1.0 sec. (SD1) = 0.095 g
Design Spectral Acceleration at 0.2 sec. (SDS) = 0.167 g
Soil Site Class = D

DESIGN STRESSES

FIELD UNITS

f'c = 4,000 psi (Superstructure)
f'c = 3,500 psi (Substructure)
fy = 50,000 psi - M270 Gr. 50 (℄ Girders)
fy = 36,000 psi - M270 Gr. 36 (Other Structural Steel)
fy = 60,000 psi (Reinforcement)

PRECAST UNITS

f'c = 4,500 psi (Precast Panels)

DESIGN SPECIFICATIONS

2020 AASHTO LRFD Bridge Design Specifications, 9th Edition

LOADING HL-93

Allow 50#/sq. ft. for future wearing surface.

SEQUENCE OF CONSTRUCTION

1. Move all traffic to existing EB lanes.
2. Install TSRS and remove existing WB structure.
3. Excavate and install Temporary MSE Wall 1, Stage I West Abut., embankment and pavement.
4. Excavate and install Temporary MSE Wall 2, Stage I East Abut., embankment and pavement.
5. Construct WB structure and move traffic to WB lanes.
6. Remove and fill existing EB structure.
7. Excavate, remove TSRS, and construct proposed EB structure.

APPROVED
For Structural Adequacy Only
Engineer of Bridges & Structures

LICENSED STRUCTURAL ENGINEER
GERALD E. KOYLASS
081-005264
STATE OF ILLINOIS

SIGNATURE
EXPIRES: NOVEMBER 30, 2026
DATE: 10/31/2025

N

Range 10E, 3 P.M.

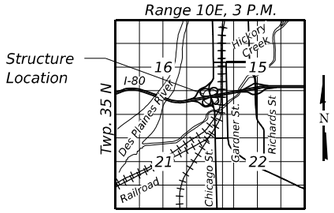

LOCATION SKETCH

GENERAL PLAN AND ELEVATION
I-80 EB/WB OVER CHICAGO ST.
F.A.I. RTE. 80 - SEC 2017-057F
WILL COUNTY
STATION 706+95.30
STRUCTURE NO. 099-8310

MODEL: Default
FILE NAME: 0998310-62F94-001-GPE.dgn
10/27/2025 4:58:15 PM

BURNS McDONNELL

USER NAME =	DESIGNED - ECK	REVISED -	
	CHECKED - GEK	REVISED -	
PLOT SCALE =	DRAWN - ECK	REVISED -	
PLOT DATE =	CHECKED - GEK	REVISED -	

STATE OF ILLINOIS
DEPARTMENT OF TRANSPORTATION

SHEET SB-1 OF SB-53 SHEETS

F.A.I. RTE.	SECTION	COUNTY	TOTAL SHEETS	SHEET NO.
80	2017-057F	WILL	1342	777
		CONTRACT NO. 62F94		
	ILLINOIS	FED. AID PROJECT		

INDEX OF SHEETS

GENERAL NOTES:

1. Fasteners shall be ASTM F 3125 Grade A325 Type 1, mechanically galvanized bolts in painted or coated metallized areas. Bolts ¾ in. Ø, holes $^{15}/_{16}$ in. Ø, unless otherwise noted.

2. Calculated weight of Structural Steel = 787,110 Pounds (M 270 Grade 50)
   51,280 Pounds (M 270 Grade 36)

3. All structural steel shall be metallized. See Special Provision for "Metallizing of Structural Steel."

4. The interior metallized areas shall be painted with System 1. Exterior fascia and bottom of bottom flange areas shall be metallized and shop painted (System 3). See special provision for "Metallizing of Structural Steel." The color of the final finish coat of the paint shall be Gray, Munsell No. 5B 7/1.

5. No field welding is permitted except as specified in the contract documents.

6. Reinforcement bars designated (E) shall be epoxy coated.

7. If the Contractor elects to use cantilever forming brackets on the exterior beams or girders, the brackets shall be placed at the same locations as required for the hardwood blocks in Article 503.06(b) of the Standard Specifications. If additional cantilever forming brackets are required, hardwood blocking shall be wedged between the exterior and first interior beam at each of these additional bracket locations.

8. Slipforming of the parapets is not allowed.

9. The existing structural steel coating contains lead. The Contractor shall take appropriate precautions to deal with the presence of lead on this project.

10. Roadway embankment within the limits of the existing Chicago St. bridge must be placed a minimum of 3 months prior to roadway construction. Cost of embankment included in roadway plans.

11. Removal of existing abutments, piers, piles (unless otherwise noted), bearings and bolsters, superstructure, slopewall, temporary cribbing, existing deck protective shield or portions thereof included in cost of Removal of Existing Structures No. 3 - S.N. 099-0059 (EB) and Existing Structures No. 4 - S.N. 099-0058 (WB)

12. The embankment configuration shown shall be the minimum that must be placed and compacted prior to construction of abutments.

13. Bridge plans Stage I and Stage II correspond to MOT Stage 3 and MOT Stage 5 respectively.

TOTAL BILL OF MATERIAL

ITEM	UNIT	SUPER	SUB	TOTAL
Removal of Existing Structures No. 3	Each	1	-	1
Removal of Existing Structures No. 4	Each	1	-	1
Structure Excavation	Cu. Yd.	-	8,237	8,237
Concrete Structures	Cu. Yd.	-	289.5	289.5
Concrete Superstructure	Cu. Yd.	889.8	-	889.8
Protective Coat	Sq. Yd.	3,653	-	3,653
Concrete Superstructure (Approach Slab)	Cu. Yd.	440.1	-	440.1
Furnishing And Erecting Structural Steel	L. Sum	1	-	1
Stud Shear Connectors	Each	13,356	-	13,356
Reinforcement Bars, Epoxy Coated	Pound	342,210	48,440	390,650
Furnishing Steel Piles HP14X89	Foot	-	2,220	2,220
Driving Piles	Foot	-	2,220	2,220
Test Pile Steel HP14X89	Each	-	2	2
Pile Shoes	Each	-	42	42
Name Plates	Each	1	-	1
Preformed Joint Seal 3½"	Foot	197	-	197
Anchor Bolts, 1"	Each	84	-	84
Temporary Soil Retention System	Sq. Ft.	-	3,905	3,905
Mechanically Stabilized Earth Retaining Wall	Sq. Ft.	-	9,006	9,006
Temporary Mechanically Stabilized Earth Retaining Wall	Sq. Ft.	-	4,496	4,496
Aggregate Column Ground Improvement	L. Sum	-	0.6	0.6
Bridge Deck Grooving (Longitudinal)	Sq. Yd.	2,273	-	2,273
Bar Terminators	Each	312	1,436	1,748
Pile Removal	Each	-	7	7
Chain Link Fence, 4' Attached to Structure	Foot	-	212	212
Diamond Grinding (Bridge Section)	Sq. Yd.	3,101	-	3,101

STATION 706+95.30
BUILT 20 _ _ BY
STATE OF ILLINOIS
F.A.I. RTE. 80 SEC. 2017-057F
LOADING HL-93
STRUCTURE NO. 099-8310

NAME PLATE

See Std. 515001

MODEL: Default
FILE NAME: 0998310-62F94-002-IDX.dgn

BURNS McDONNELL

USER NAME =	DESIGNED - ECK	REVISED -	
	CHECKED - GEK	REVISED -	
PLOT SCALE =	DRAWN - ECK	REVISED -	
PLOT DATE =	CHECKED - SLM	REVISED -	

STATE OF ILLINOIS
DEPARTMENT OF TRANSPORTATION

INDEX OF SHEETS, GENERAL NOTES & TOTAL BILL OF MATERIAL
STRUCTURE NO. 099-8310

SHEET SB-2 OF SB-53 SHEETS

F.A.I. RTE.	SECTION	COUNTY	TOTAL SHEETS	SHEET NO.
80	2017-057F	WILL	1342	778

CONTRACT NO. 62F94

ILLINOIS FED. AID PROJECT

12/1/2025 8:11:37 AM

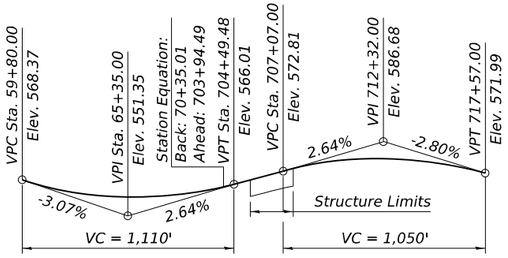

PROFILE GRADE

(Along Prop. P.G.L. EB & WB I-80)
(Up to ¼ inch to be ground off the bridge deck and the bridge approach slabs. The Profile Grade shows the final grade after grinding.)

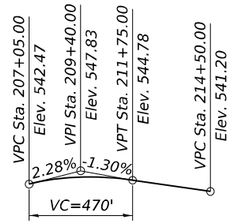

PROFILE GRADE

(Along Prop. NB P.G.L. Chicago St.)

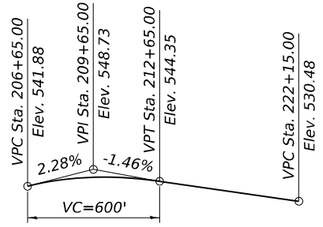

PROFILE GRADE

(Along Prop. SB P.G.L. Chicago St.)

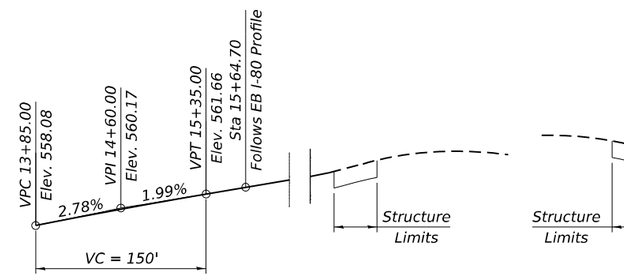

PROFILE GRADE

(Along ℄ Prop. Ramp AA)

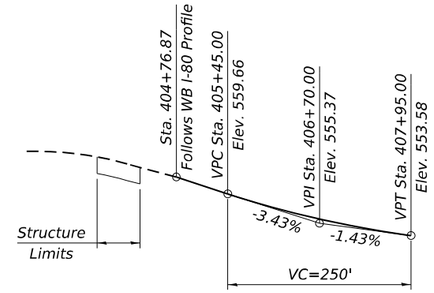

PROFILE GRADE

(Along ℄ Prop. Ramp BB)

CURVE DATA - I-80

P.I. Sta. = 64+27.70
Δ = 22°01'22" (LT)
D = 1°47'26"
R = 3,200.00'
T = 622.68'
L = 1,229.99'
E = 60.02'
e = 5.2%
P.C. Sta. = 58+05.02 (West of Project Limits)
P.T. Sta. = 703+94.49
EB. S.E. Run = 312'
EB T.R. = 38.68'
EB S.E. Attained West of Project Limits
EB S.E. Removed from Sta. 69+02.77 to Sta. 706+12.93
WB. S.E. Run = 63.5'
WB T.R. = 74.09'
WB S.E. Attained West of Project Limits
WB S.E. Transition from Sta. 68+69.48 (5.2%)
to Sta. 704+74.58 (1.5%)
WB S.E. Held (1.5%) from Sta. 704+74.58 to Sta. 708+01.51
WB S.E. Removed from Sta. 708+01.51 to Sta. 709+39.10

CURVE DATA - CHICAGO ST.

P.I. Sta. = 217+34.18
Δ = 17°44'42" (RT)
D = 03°15'00"
R = 1,763.00
T = 275.21'
L = 546.02'
E = 21.35'
e = 2.20%
T.R. = 72.70'
S.E. Run = 80.00'
P.C. Sta. = 214+58.97
P.T. Sta. = 220+04.99
S.E. Attained from Sta. 213+32.93 to Sta. 214+85.63
S.E. Removed from Sta. 219+78.33 to Sta. 221+31.03

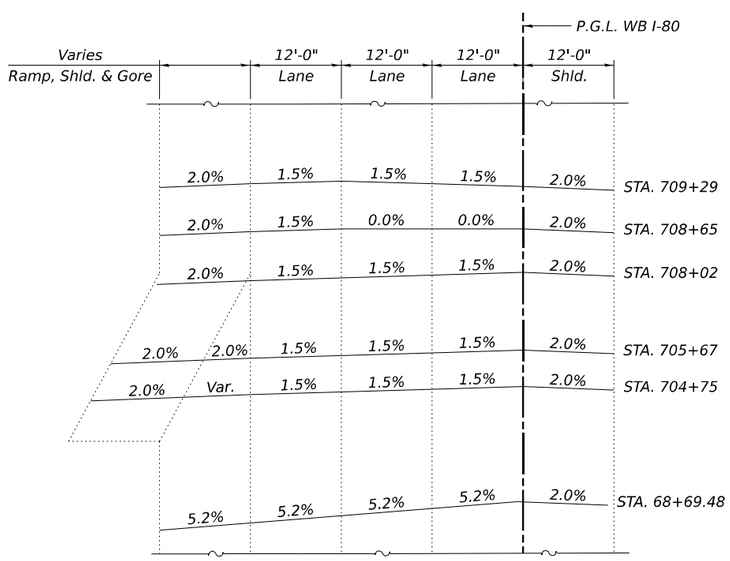

WB SUPERELEVATION DIAGRAM

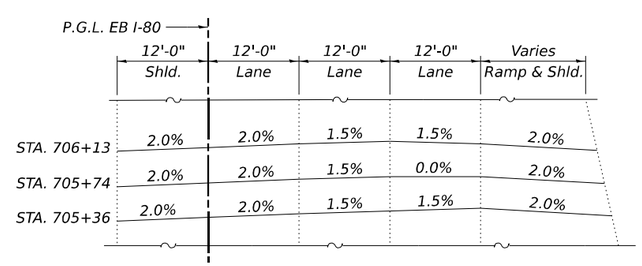

EB SUPERELEVATION DIAGRAM

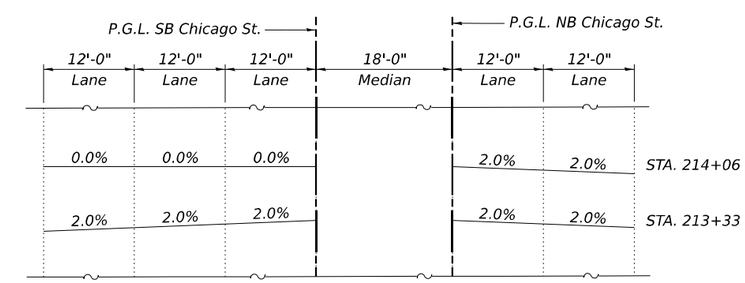

CHICAGO STREET SUPERELEVATION DIAGRAM

MODEL: Default
FILE NAME: 0998310-62F94-003-GEN.dgn
10/27/2025 4:58:22 PM

BURNS McDONNELL	USER NAME =	DESIGNED - ECK	REVISED -
		CHECKED - GEK	REVISED -
	PLOT SCALE =	DRAWN - ECK	REVISED -
	PLOT DATE =	CHECKED - KMD	REVISED -

STATE OF ILLINOIS
DEPARTMENT OF TRANSPORTATION

GENERAL DATA
STRUCTURE NO. 099-8310

SHEET SB-3 OF SB-53 SHEETS

F.A.I. RTE.	SECTION	COUNTY	TOTAL SHEETS	SHEET NO.
80	2017-057F	WILL	1342	779
		CONTRACT NO. 62F94		
	ILLINOIS	FED. AID PROJECT		

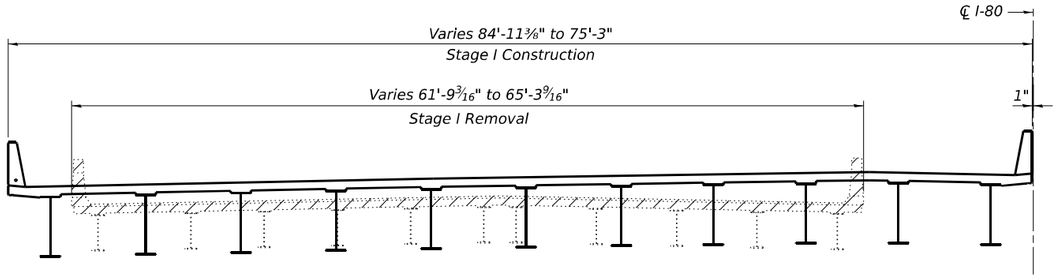

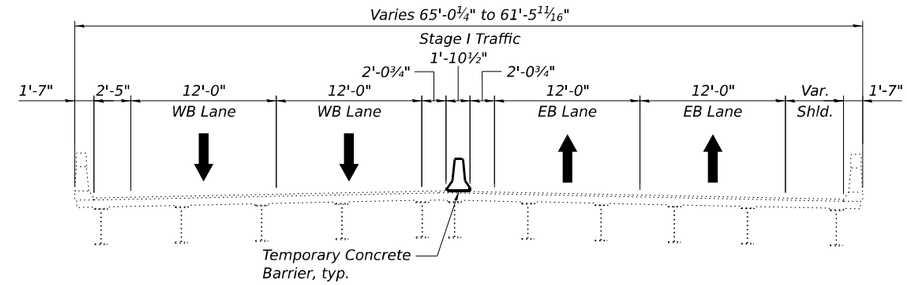

STAGE I CROSS SECTION

(Looking East)

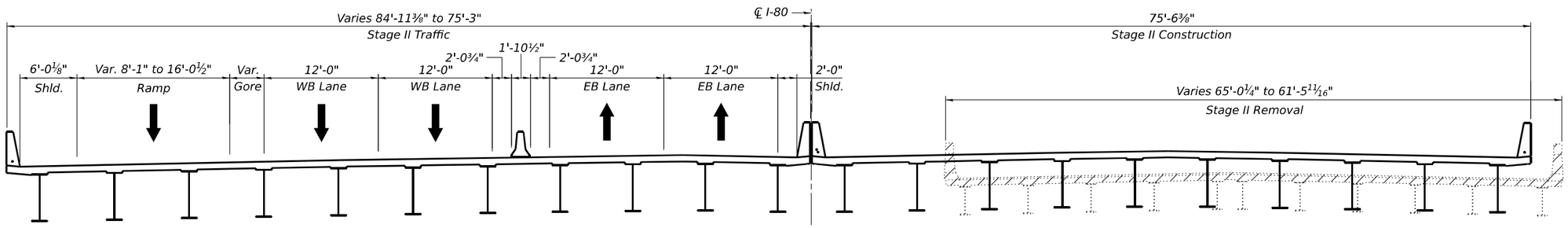

STAGE II CROSS SECTION

(Looking East)

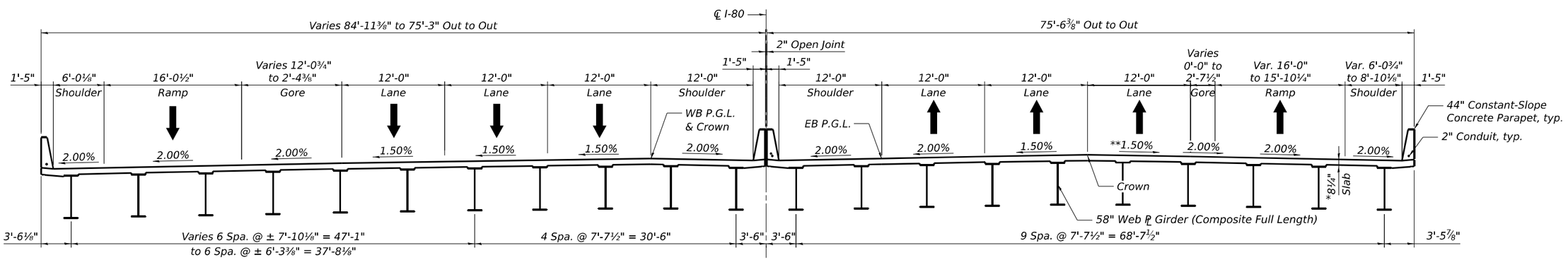

FINAL CROSS SECTION

(Looking East)

* Prior to Grinding.
** Varies from 0.29% to 1.50% on West Approach

NOTES:

1. Out-to-Out dimensions are taken at intersection of back of abutment (Sta. 706+14.87 & Sta. 707+53.54) and ℄ I-80.
2. Dimensions are measured at Rt. ∠s to ℄ I-80.
3. For Temporary Concrete Barrier details see Sheet SB-5 of SB-53.
4. See roadway plans for quantity of temporary concrete barrier and Type II Barricade or Drum.
5. See Sheet SB-39 & SB-40 of SB-53 for Stage Construction for MSE wall.

LEGEND

Removal of Existing Structures No. 3 or No. 4

MODEL: Default
FILE NAME: 0998310-62F94-004-STG.dgn

BURNS McDONNELL

USER NAME =	DESIGNED - ECK	REVISED -	
	CHECKED - GEK	REVISED -	
PLOT SCALE =	DRAWN - ECK	REVISED -	
PLOT DATE =	CHECKED - KMD	REVISED -	

STATE OF ILLINOIS
DEPARTMENT OF TRANSPORTATION

CONSTRUCTION STAGING
STRUCTURE NO. 099-8310

SHEET SB-4 OF SB-53 SHEETS

F.A.I. RTE.	SECTION	COUNTY	TOTAL SHEETS	SHEET NO.
80	2017-057F	WILL	1342	780
		CONTRACT NO. 62F94		
	ILLINOIS	FED. AID PROJECT		

10/27/2025 4:58:24 PM

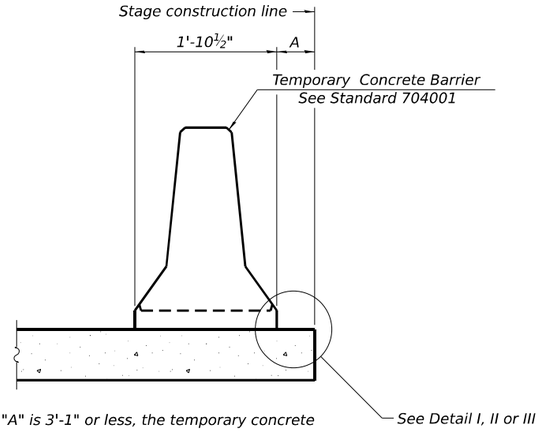

When "A" is 3'-1" or less, the temporary concrete barrier shall be restrained to the new slab according to Detail I, II or III. No restraint is required when "A" is greater than 3'-1".

NEW SLAB OR NEW DECK BEAM

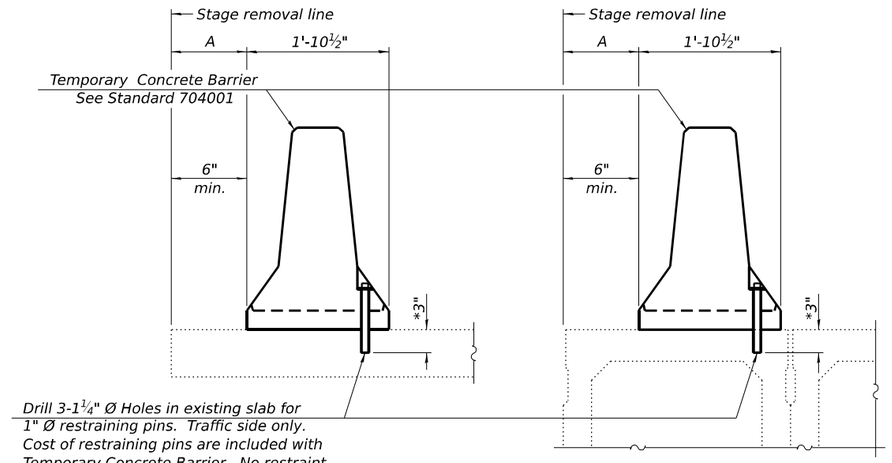

EXISTING SLAB

* When hot-mix asphalt wearing surface is present, embedment shall be 3" plus the wearing surface depth.

EXISTING DECK BEAM

SECTIONS THRU SLAB OR DECK BEAM

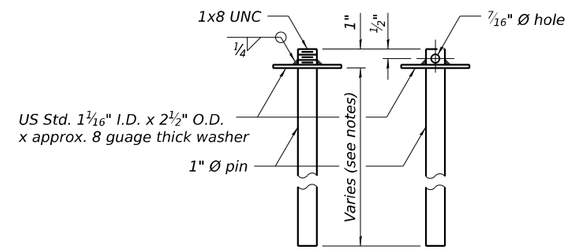

RESTRAINING PIN

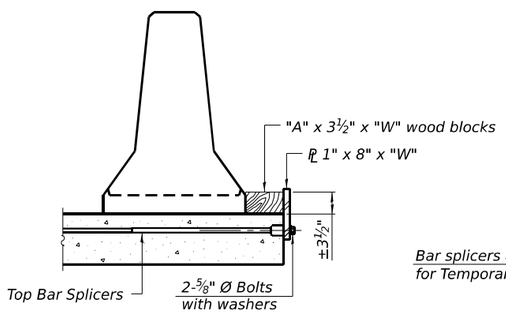

DETAIL I

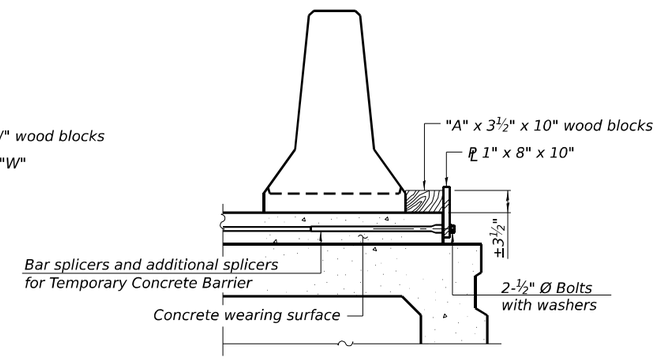

DETAIL II

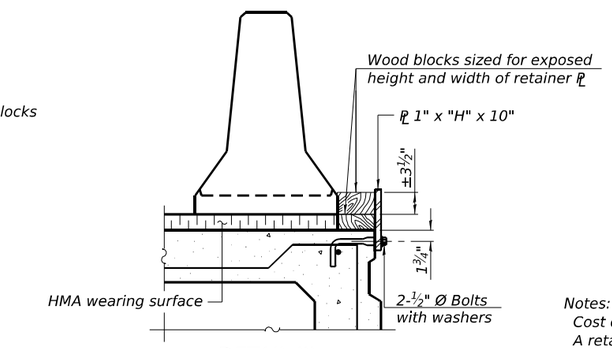

DETAIL III

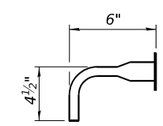

BAR SPLICER FOR #4 BAR - DETAIL III

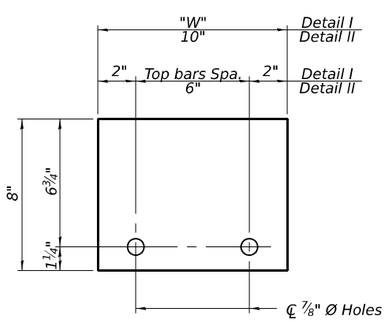

STEEL RETAINER PL 1" x 8" x "W"

(Detail I and II)

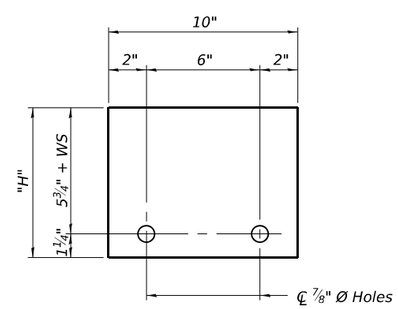

STEEL RETAINER PL 1" x "H" x 10"

(Detail III)

Notes:

Cost of retainer assembly is included with Temporary Concrete Barrier.

A retainer assembly shall be located at the approximate ℄ of each temporary concrete barrier.

The retainer plate shall not be removed until the concrete on the adjacent stage is ready to be poured. For Detail III applications the retainer plate shall not be removed until just prior to placing the adjacent beam.

When the 'A' dimension is less than 1½", the wood block shall be omitted and the barrier shall be placed in direct contact with the steel retainer plate. For deck beam applications the minimum required 'A' distance is 6" to accommodate the shear key clamping device.

Detail I - Installation for a new bridge deck or bridge slab.

Detail II - Installation for a new deck beam with an initial concrete wearing surface. Additional bar splicers shall be provided at 6'-0" centers and paired with the bar splicers of the concrete wearing surface reinforcement to accommodate the installation of the retainer assemblies. The cost of the additional bar splicers is included with the concrete wearing surface.

Detail III - Installation for a new deck beam with no initial wearing surface or with an initial hot-mix asphalt (HMA) wearing surface present. The deck beam directly beneath the temporary concrete barrier shall be fabricated with bar splicer inserts in the side of the beam, as detailed, to accommodate the installation of the retainer assemblies. A pair of bar splicers, 6" apart, shall be placed at 6'-0" centers along the length of the beam. The cost of the bar splicers is included with the deck beam.

RAILING CRITERIA

NCHRP 350 Test Level	3
Railing Weight (plf)	440

R-27

5-15-2023

MODEL: Default
FILE NAME: 0998310-62F94-005-TCB.dgn

10/27/2025 4:58:27 PM

BURNS McDONNELL

USER NAME =	DESIGNED - ECK	REVISED -	
	CHECKED - GEK	REVISED -	
PLOT SCALE =	DRAWN - ECK	REVISED -	
PLOT DATE =	CHECKED - IS	REVISED -	

STATE OF ILLINOIS
DEPARTMENT OF TRANSPORTATION

TEMPORARY CONCRETE BARRIER
STRUCTURE NO. 099-8310

SHEET SB-5 OF SB-53 SHEETS

F.A.I. RTE.	SECTION	COUNTY	TOTAL SHEETS	SHEET NO.
80	2017-057F	WILL	1342	781
		CONTRACT NO. 62F94		
		ILLINOIS	FED. AID PROJECT	

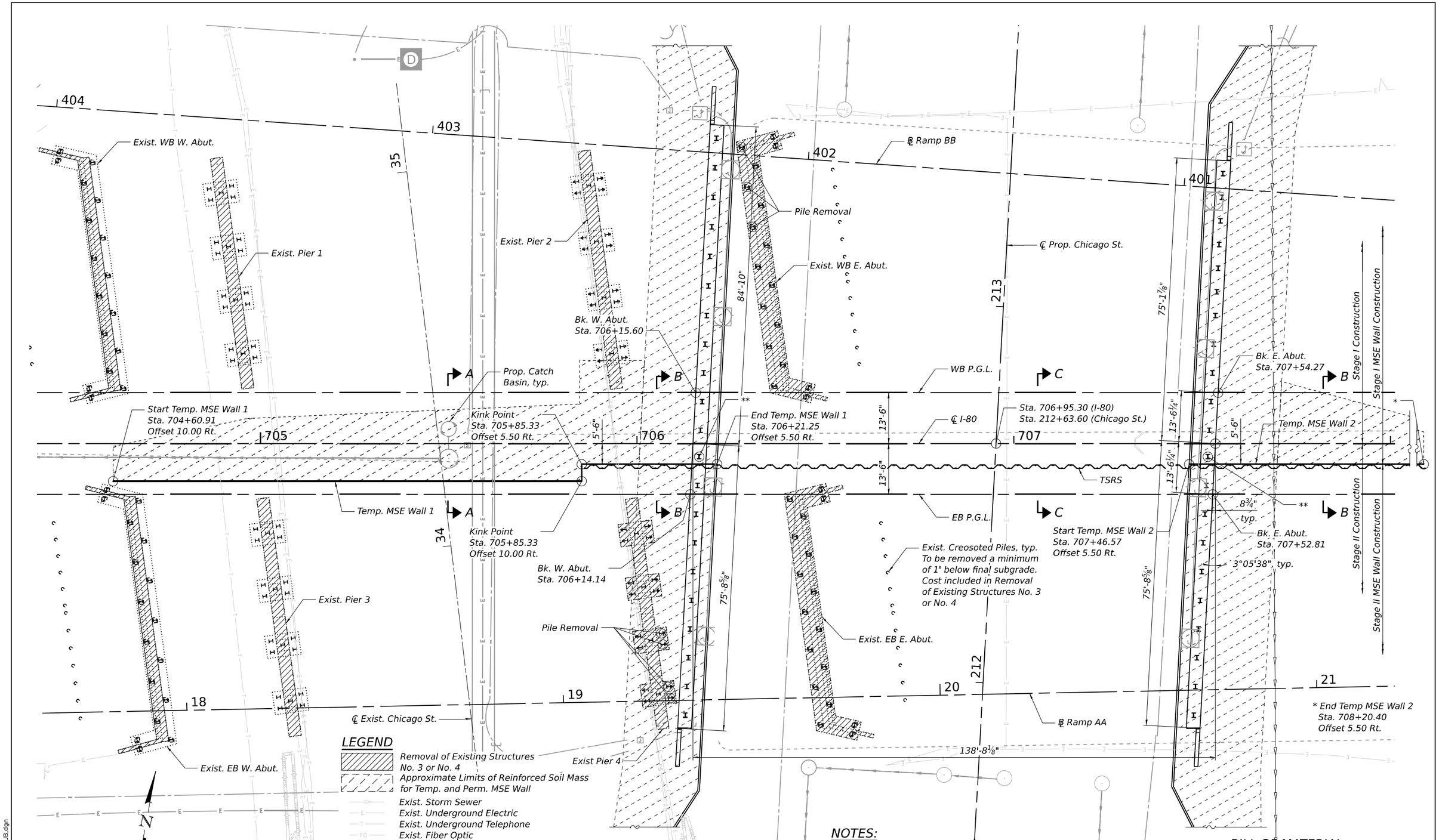

LEGEND

- Removal of Existing Structures No. 3 or No. 4
- Approximate Limits of Reinforced Soil Mass for Temp. and Perm. MSE Wall
- Exist. Storm Sewer
- Exist. Underground Electric
- Exist. Underground Telephone
- Exist. Fiber Optic
- Prop. Storm Sewer
- Prop. Lighting Conduit
- Prop. Underground Electric
- Prop. Underground Conduit
- Prop. Interconnect Conduit

SUBSTRUCTURE PLAN

NOTES:

1. See Sheet SB-7 of SB-53 for TSRS and Temp. MSE Wall Details.
2. See Sheet SB-8 of SB-53 for removal details.
3. See Roadway Plans for removals and abandonments of existing utilities.
4. Aggregate column ground improvement not shown for clarity.

** Pile to be driven during Stage I

BILL OF MATERIAL

Item	Unit	Quantity
Pile Removal	Each	7

MODEL: Default
FILE NAME: 0998310-62F94-006-SUB.dgn

10/27/2025 4:58:32 PM

BURNS McDONNELL

USER NAME =	DESIGNED - ECK	REVISED -	
	CHECKED - GEK	REVISED -	
PLOT SCALE =	DRAWN - ECK	REVISED -	
PLOT DATE =	CHECKED - SLM	REVISED -	

STATE OF ILLINOIS
DEPARTMENT OF TRANSPORTATION

SUBSTRUCTURE LAYOUT & REMOVAL PLAN
STRUCTURE NO. 099-8310

SHEET SB-6 OF SB-53 SHEETS

F.A.I. RTE.	SECTION	COUNTY	TOTAL SHEETS	SHEET NO.
80	2017-057F	WILL	1342	782

CONTRACT NO. 62F94

ILLINOIS FED. AID PROJECT

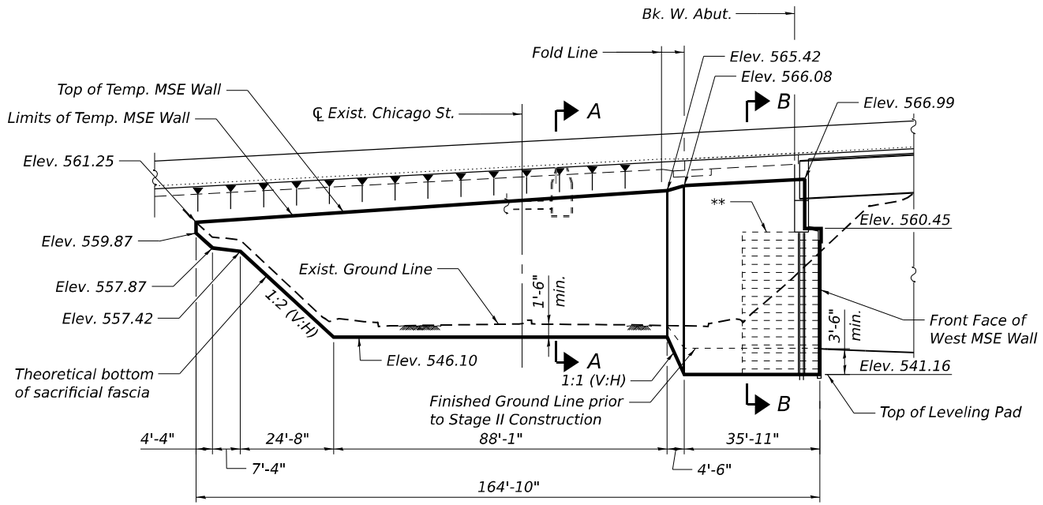

TEMP. MSE WALL 1 UNFOLDED ELEVATION

(Stage I Construction, Looking North)

** Limits of Reinforced Fill for permanent MSE Wall

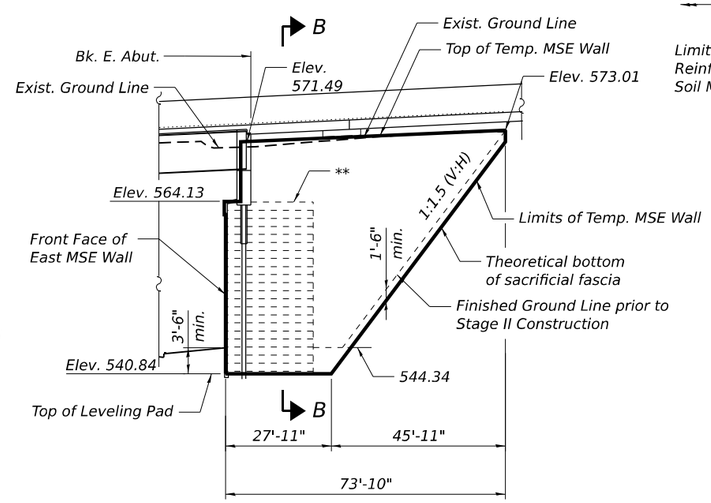

TEMP. MSE WALL 2 ELEVATION

(Stage I Construction, Looking North)

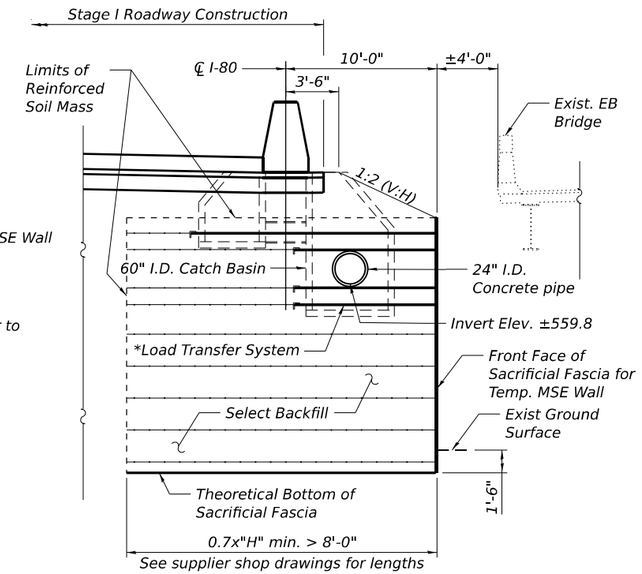

SECTION A-A

* MSE Wall supplier to design load transfer system to accommodate concrete pipe and catch basin

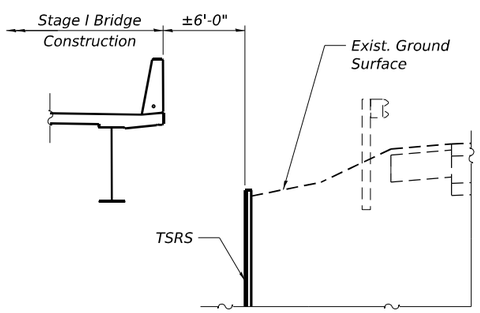

SECTION C-C

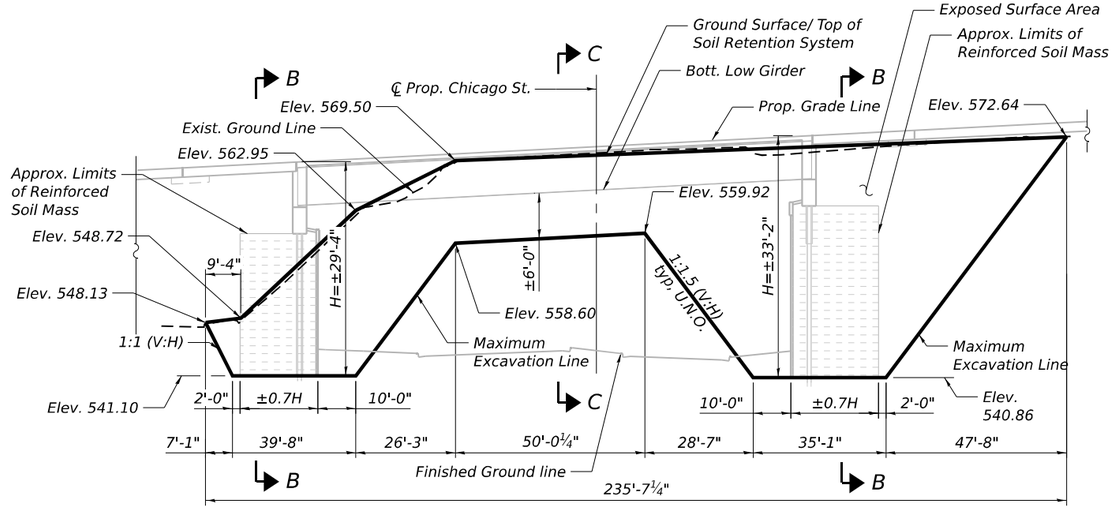

TSRS ELEVATION

(Stage I Construction, Looking North)

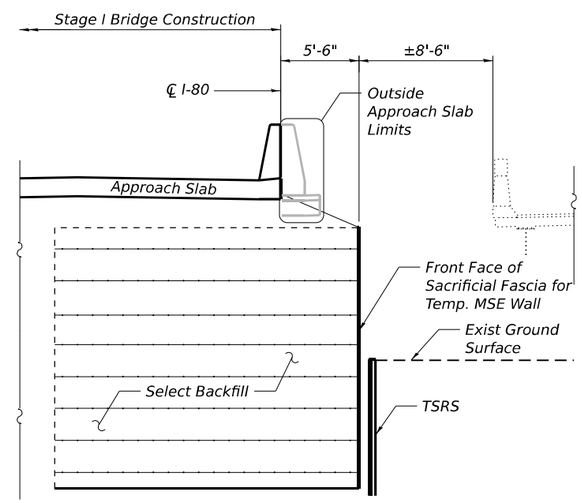

SECTION B-B

NOTES:

1. Aggregate column ground improvement not shown for clarity.
2. A cantilevered sheet piling design does not appear feasible and additional members or other retention systems may be necessary. The Contractor shall submit a temporary soil retention system design including plan details and calculations for review and acceptance by the Engineer.
3. U.N.O. is abbreviation for Unless Noted Otherwise.

BILL OF MATERIAL

Item	Unit	Quantity
Temporary Soil Retention System	Sq. Ft.	3,905
Temporary Mechanically Stabilized Earth Retaining Wall	Sq. Ft.	4,496

MODEL: Default
FILE NAME: 0998310-62F94-007-TSRS.dgn

BURNS McDONNELL

USER NAME =	DESIGNED - ECK	REVISED -
	CHECKED - GEK	REVISED -
PLOT SCALE =	DRAWN - ECK	REVISED -
PLOT DATE =	CHECKED - SLM	REVISED -

STATE OF ILLINOIS
DEPARTMENT OF TRANSPORTATION

TSRS AND TEMPORARY MSE WALL DETAILS
STRUCTURE NO. 099-8310

SHEET SB-7 OF SB-53 SHEETS

F.A.I. RTE.	SECTION	COUNTY	TOTAL SHEETS	SHEET NO.
80	2017-057F	WILL	1342	783

CONTRACT NO. 62F94

ILLINOIS FED. AID PROJECT

10/27/2025 4:58:35 PM

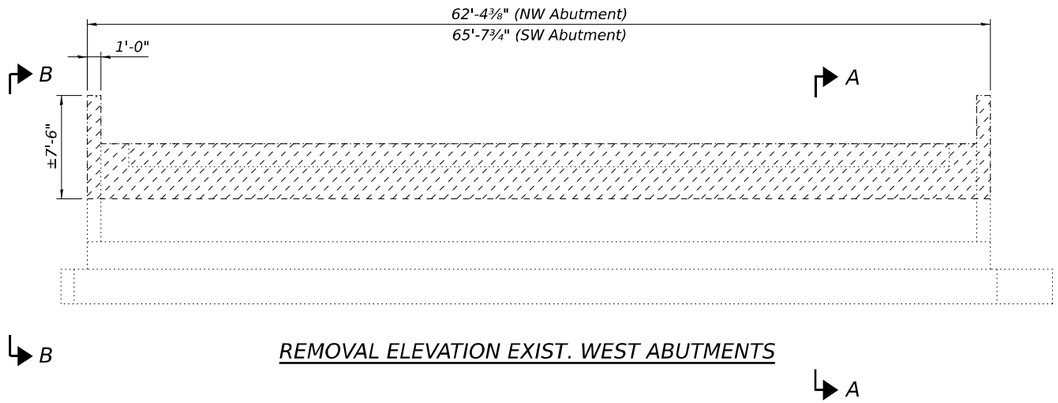

REMOVAL ELEVATION EXIST. WEST ABUTMENTS

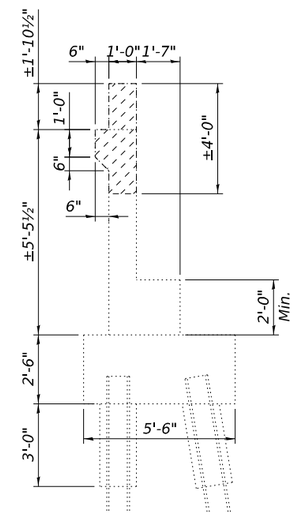

SECTION A-A

(Abutment Removal)

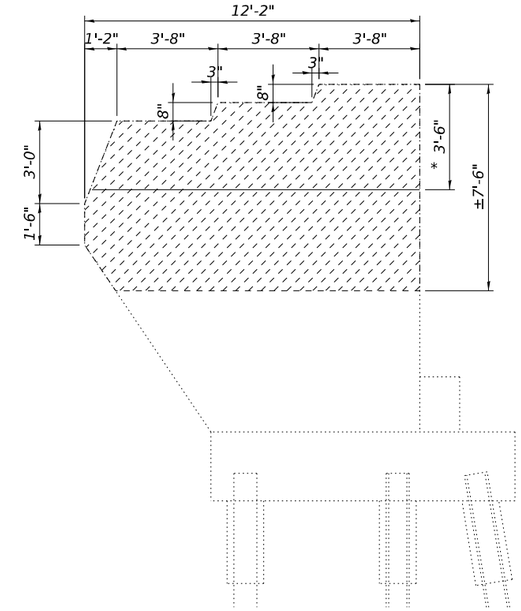

* Barriers on WB Bridge Only.
Barriers on EB Bridge West Abutment Wingwalls removed in prior construction stages.

VIEW B-B

(* Wingwall Removal)

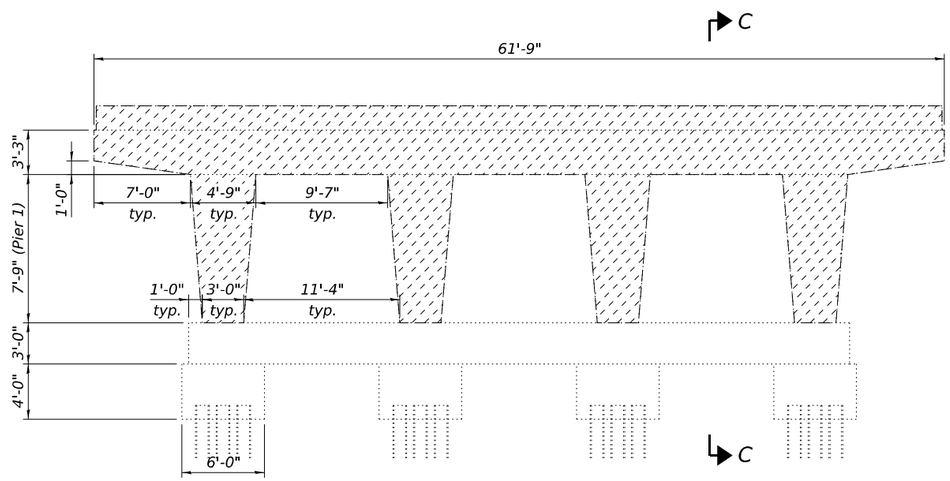

REMOVAL ELEVATION EXIST. PIER 1

(Looking East)

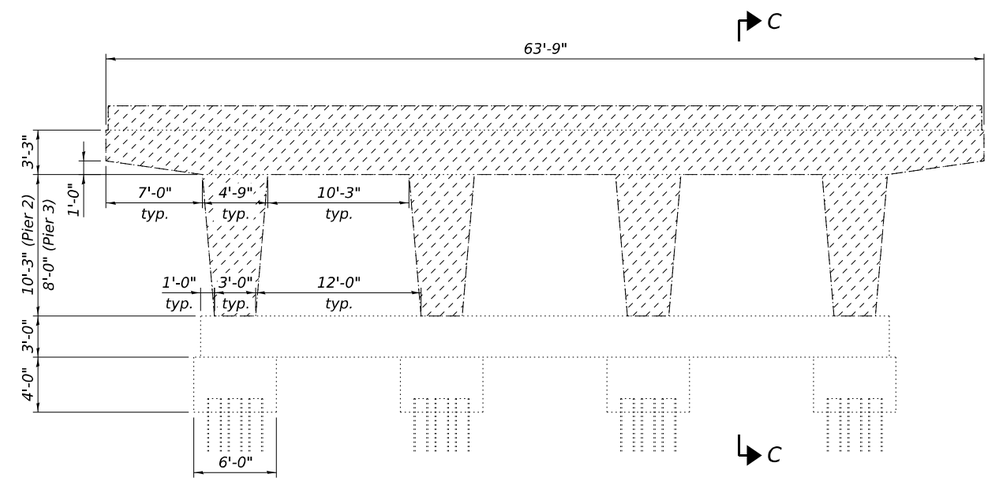

REMOVAL ELEVATION EXIST. PIER 2 & PIER 3

(Looking East)

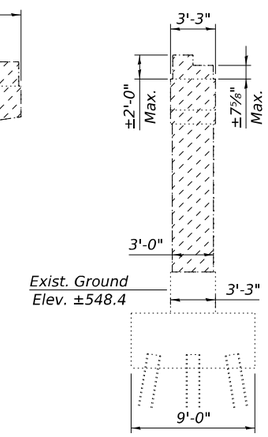

SECTION C-C

(Pier Removal)

NOTES:

1. Exist. East Abutments and Pier 4 to be fully removed. Minimum removal limits of remaining substructure elements shown. Piles shall be cut a minimum of 1 foot below final ground elevation or subgrade, unless noted otherwise. Contractor may remove additional areas of existing structure as required for installation of MSE walls, and placement and compaction of embankment within limits of existing Chicago Street. Cost of additional removal areas included with Removal of Existing Structures No. 3 & 4.
2. See Sheet SB-6 of SB-53 for Pile Removal Locations.

LEGEND

Removal of Exist. Structures No. 3 or No. 4

MODEL: Default
FILE NAME: 0998310-62F94-008-REM.dgn

10/27/2025 4:58:37 PM

BURNS McDONNELL

USER NAME =	DESIGNED - ECK	REVISED -	
	CHECKED - GEK	REVISED -	
PLOT SCALE =	DRAWN - ECK	REVISED -	
PLOT DATE =	CHECKED - KMD	REVISED -	

STATE OF ILLINOIS
DEPARTMENT OF TRANSPORTATION

REMOVAL DETAILS
STRUCTURE NO. 099-8310

SHEET SB-8 OF SB-53 SHEETS

F.A.I. RTE.	SECTION	COUNTY	TOTAL SHEETS	SHEET NO.
80	2017-057F	WILL	1342	784

CONTRACT NO. 62F94

ILLINOIS FED. AID PROJECT

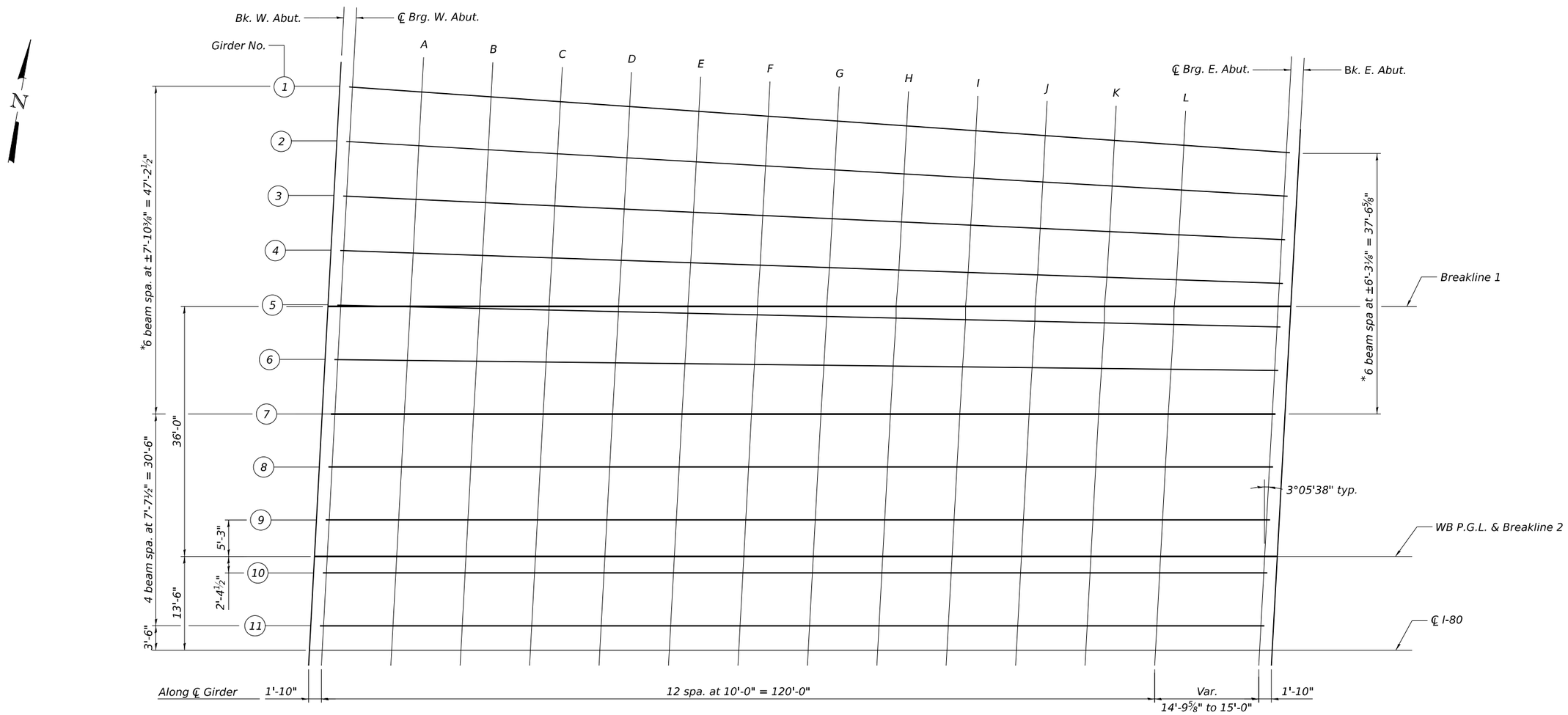

PLAN

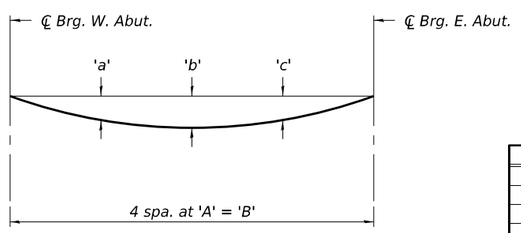

DEAD LOAD DEFLECTION DIAGRAM

(Includes weight of concrete only.)

The above deflections are not to be used in the field if the engineer is working from the grade elevations adjusted for dead load deflections and grinding as shown on sheets SB-10 & SB-11 of SB-53 .

DEFLECTION DIAGRAM TABLE

Girder	A	B	a	b	c
1	±33'-8 7/16"	134'-9 13/16"	3⅝"	5⅛"	3⅝"
2	±33'-8 7/16"	134'-9⅝"	3⅜"	4⅝"	3⅜"
3	±33'-8 7/16"	134'-9 11/16"			
4	±33'-8½"	134'-9 15/16"	3"	4⅛"	2⅞"
5	±33'-8⅝"	134'-10⅜"			
6	±33'-8¾"	134'-11 1/16"			
7	33'-9"	135'-0"	3⅛"	4¼"	3"
8	33'-9"	135'-0"	3¼"	4⅜"	3¼"
9 & 10	33'-9"	135'-0"	3⅝"	5"	3⅝"
11	33'-9"	135'-0"	3¾"	5¼"	3¾"

* Measured to back of Abutment

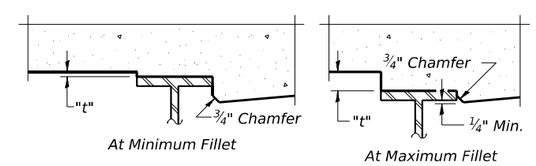

To determine "t": After all structural steel has been erected, elevations of the top flanges of the beams shall be taken at intervals shown. These elevations subtracted from the "Theoretical Grade Elevations Adjusted for Dead Load Deflection and Grinding", on Sheets SB-10 thru SB-11 of SB-53, minus the initial slab thickness prior to grinding, equals the fillet heights "t" above top flange of beams.

The slab is to be ground after curing to achieve smoothness, but the slab is not to be ground to elevations below the "Theoretical Grade Elevations" on Sheets SB-10 thru SB-11 of SB-53. For grinding the deck, see Special Provisions.

FILLET HEIGHTS

MODEL: Default
FILE NAME: 0998310-62F94-009-WTOS1.dgn

BURNS McDONNELL	USER NAME =	DESIGNED - ECK	REVISED -
		CHECKED - GEK	REVISED -
	PLOT SCALE =	DRAWN - ECK	REVISED -
	PLOT DATE =	CHECKED - KMD	REVISED -

STATE OF ILLINOIS
DEPARTMENT OF TRANSPORTATION

TOP OF DECK SLAB ELEVATIONS LAYOUT - WB
STRUCTURE NO. 099-8310

SHEET SB-9 OF SB-53 SHEETS

F.A.I. RTE.	SECTION	COUNTY	TOTAL SHEETS	SHEET NO.
80	2017-057F	WILL	1342	785
		CONTRACT NO. 62F94		
		ILLINOIS	FED. AID PROJECT	

10/27/2025 4:58:39 PM

GIRDER 1

Location	Station	Offset	Theoretical Grade Elevations	Theoretical Grade Elevations Adjusted For Dead Load Deflection and Grinding
Bk. W. Abut.	706+19.26	-81.21	569.32	569.34
℄ Brg. W. Abut.	706+21.09	-81.08	569.37	569.39
A	706+31.07	-80.39	569.65	569.77
B	706+41.04	-79.69	569.93	570.14
C	706+51.02	-78.99	570.20	570.50
D	706+60.99	-78.29	570.48	570.85
E	706+70.97	-77.60	570.76	571.17
F	706+80.95	-76.90	571.04	571.47
G	706+90.92	-76.20	571.31	571.76
H	707+00.90	-75.50	571.59	572.02
I	707+10.87	-74.81	571.87	572.26
J	707+20.85	-74.11	572.14	572.48
K	707+30.82	-73.41	572.41	572.67
L	707+40.80	-72.71	572.67	572.84
℄ Brg. E. Abut.	707+55.58	-71.68	573.05	573.07
Bk. E. Abut.	707+57.41	-71.55	573.10	573.12

GIRDER 2

Location	Station	Offset	Theoretical Grade Elevations	Theoretical Grade Elevations Adjusted For Dead Load Deflection and Grinding
Bk. W. Abut.	706+18.83	-73.34	569.47	569.49
℄ Brg. W. Abut.	706+20.67	-73.24	569.52	569.54
A	706+30.65	-72.66	569.79	569.91
B	706+40.63	-72.07	570.07	570.27
C	706+50.62	-71.49	570.34	570.62
D	706+60.60	-70.91	570.62	570.96
E	706+70.58	-70.33	570.89	571.28
F	706+80.57	-69.75	571.17	571.58
G	706+90.55	-69.17	571.44	571.85
H	707+00.53	-68.59	571.72	572.12
I	707+10.52	-68.00	571.99	572.36
J	707+20.50	-67.42	572.27	572.58
K	707+30.48	-66.84	572.53	572.77
L	707+40.46	-66.26	572.79	572.95
℄ Brg. E. Abut.	707+55.24	-65.40	573.17	573.19
Bk. E. Abut.	707+57.07	-65.29	573.21	573.23

GIRDER 3

Location	Station	Offset	Theoretical Grade Elevations	Theoretical Grade Elevations Adjusted For Dead Load Deflection and Grinding
Bk. W. Abut.	706+18.41	-65.47	569.61	569.63
℄ Brg. W. Abut.	706+20.24	-65.39	569.66	569.68
A	706+30.23	-64.92	569.94	570.05
B	706+40.22	-64.46	570.21	570.41
C	706+50.21	-63.99	570.48	570.76
D	706+60.20	-63.53	570.76	571.10
E	706+70.19	-63.06	571.03	571.41
F	706+80.18	-62.60	571.30	571.71
G	706+90.17	-62.13	571.57	571.99
H	707+00.16	-61.67	571.85	572.24
I	707+10.15	-61.20	572.12	572.48
J	707+20.14	-60.74	572.39	572.70
K	707+30.12	-60.27	572.65	572.89
L	707+40.11	-59.81	572.91	573.07
℄ Brg. E. Abut.	707+54.90	-59.12	573.29	573.31
Bk. E. Abut.	707+56.73	-59.03	573.33	573.35

GIRDER 4

Location	Station	Offset	Theoretical Grade Elevations	Theoretical Grade Elevations Adjusted For Dead Load Deflection and Grinding
Bk. W. Abut.	706+17.98	-57.61	569.76	569.78
℄ Brg. W. Abut.	706+19.82	-57.54	569.81	569.83
A	706+29.81	-57.19	570.08	570.18
B	706+39.81	-56.84	570.35	570.53
C	706+49.80	-56.50	570.62	570.87
D	706+59.79	-56.15	570.89	571.19
E	706+69.79	-55.80	571.16	571.50
F	706+79.78	-55.45	571.43	571.79
G	706+89.78	-55.10	571.71	572.06
H	706+99.77	-54.75	571.98	572.32
I	707+09.76	-54.40	572.25	572.56
J	707+19.76	-54.05	572.51	572.79
K	707+29.75	-53.71	572.78	572.99
L	707+39.75	-53.36	573.03	573.17
℄ Brg. E. Abut.	707+54.56	-52.84	573.40	573.42
Bk. E. Abut.	707+56.39	-52.78	573.45	573.47

BREAKLINE 1

Location	Station	Offset	Theoretical Grade Elevations	Theoretical Grade Elevations Adjusted For Dead Load Deflection and Grinding
Bk. W. Abut.	706+17.55	-49.50	569.91	569.93
℄ Brg. W. Abut.	706+19.38	-49.50	569.96	569.98
A	706+29.38	-49.50	570.22	570.33
B	706+39.38	-49.50	570.49	570.67
C	706+49.38	-49.50	570.75	571.00
D	706+59.38	-49.50	571.01	571.31
E	706+69.38	-49.50	571.28	571.61
F	706+79.38	-49.50	571.54	571.90
G	706+89.38	-49.50	571.81	572.17
H	706+99.38	-49.50	572.07	572.42
I	707+09.38	-49.50	572.33	572.65
J	707+19.38	-49.50	572.60	572.87
K	707+29.38	-49.50	572.85	573.06
L	707+39.38	-49.50	573.10	573.24
℄ Brg. E. Abut.	707+54.38	-49.50	573.47	573.49
Bk. E. Abut.	707+56.22	-49.50	573.51	573.53

GIRDER 5

Location	Station	Offset	Theoretical Grade Elevations	Theoretical Grade Elevations Adjusted For Dead Load Deflection and Grinding
Bk. W. Abut.	706+17.56	-49.74	569.90	569.93
℄ Brg. W. Abut.	706+19.39	-49.69	569.95	569.98
A	706+29.39	-49.46	570.22	570.33
B	706+39.39	-49.23	570.49	570.67
C	706+49.39	-49.00	570.76	571.00
D	706+59.38	-48.76	571.03	571.32
E	706+69.38	-48.53	571.29	571.63
F	706+79.38	-48.30	571.56	571.92
G	706+89.38	-48.07	571.83	572.19
H	706+99.37	-47.84	572.10	572.44
I	707+09.37	-47.60	572.36	572.68
J	707+19.37	-47.37	572.63	572.90
K	707+29.36	-47.14	572.89	573.10
L	707+39.36	-46.91	573.14	573.28
℄ Brg. E. Abut.	707+54.22	-46.56	573.51	573.53
Bk. E. Abut.	707+56.06	-46.52	573.55	573.57

GIRDER 6

Location	Station	Offset	Theoretical Grade Elevations	Theoretical Grade Elevations Adjusted For Dead Load Deflection and Grinding
Bk. W. Abut.	706+17.13	-41.87	570.01	570.03
℄ Brg. W. Abut.	706+18.97	-41.85	570.06	570.08
A	706+28.97	-41.73	570.33	570.43
B	706+38.97	-41.61	570.59	570.77
C	706+48.97	-41.50	570.86	571.11
D	706+58.97	-41.38	571.13	571.42
E	706+68.97	-41.27	571.39	571.73
F	706+78.97	-41.15	571.66	572.01
G	706+88.96	-41.03	571.92	572.28
H	706+98.96	-40.92	572.19	572.53
I	707+08.96	-40.80	572.45	572.77
J	707+18.96	-40.69	572.72	572.99
K	707+28.96	-40.57	572.97	573.19
L	707+38.96	-40.45	573.23	573.37
℄ Brg. E. Abut.	707+53.88	-40.28	573.59	573.61
Bk. E. Abut.	707+55.72	-40.26	573.64	573.66

GIRDER 7

Location	Station	Offset	Theoretical Grade Elevations	Theoretical Grade Elevations Adjusted For Dead Load Deflection and Grinding
Bk. W. Abut.	706+16.71	-34.00	570.12	570.14
℄ Brg. W. Abut.	706+18.54	-34.00	570.17	570.19
A	706+28.54	-34.00	570.43	570.54
B	706+38.54	-34.00	570.70	570.88
C	706+48.54	-34.00	570.96	571.21
D	706+58.54	-34.00	571.22	571.53
E	706+68.54	-34.00	571.49	571.84
F	706+78.54	-34.00	571.75	572.12
G	706+88.54	-34.00	572.02	572.39
H	706+98.54	-34.00	572.28	572.64
I	707+08.54	-34.00	572.55	572.88
J	707+18.54	-34.00	572.81	573.09
K	707+28.54	-34.00	573.06	573.28
L	707+38.54	-34.00	573.31	573.46
℄ Brg. E. Abut.	707+53.54	-34.00	573.68	573.70
Bk. E. Abut.	707+55.38	-34.00	573.72	573.74

NOTE:

1. Offsets are measured in feet and are given relative to ℄ I-80.

GIRDER 8

Location	Station	Offset	Theoretical Grade Elevations	Theoretical Grade Elevations Adjusted For Dead Load Deflection and Grinding
Bk. W. Abut.	706+16.30	-26.38	570.22	570.24
℄ Brg. W. Abut.	706+18.13	-26.38	570.27	570.29
A	706+28.13	-26.38	570.54	570.65
B	706+38.13	-26.38	570.80	570.99
C	706+48.13	-26.38	571.06	571.33
D	706+58.13	-26.38	571.33	571.65
E	706+68.13	-26.38	571.59	571.95
F	706+78.13	-26.38	571.86	572.24
G	706+88.13	-26.38	572.12	572.51
H	706+98.13	-26.38	572.38	572.76
I	707+08.13	-26.38	572.65	572.99
J	707+18.13	-26.38	572.91	573.20
K	707+28.13	-26.38	573.17	573.39
L	707+38.13	-26.38	573.42	573.57
℄ Brg. E. Abut.	707+53.13	-26.38	573.78	573.80
Bk. E. Abut.	707+54.97	-26.38	573.83	573.85

GIRDER 9

Location	Station	Offset	Theoretical Grade Elevations	Theoretical Grade Elevations Adjusted For Dead Load Deflection and Grinding
Bk. W. Abut.	706+15.88	-18.75	570.33	570.35
℄ Brg. W. Abut.	706+17.72	-18.75	570.38	570.40
A	706+27.72	-18.75	570.64	570.76
B	706+37.72	-18.75	570.90	571.12
C	706+47.72	-18.75	571.17	571.46
D	706+57.72	-18.75	571.43	571.79
E	706+67.72	-18.75	571.70	572.10
F	706+77.72	-18.75	571.96	572.39
G	706+87.72	-18.75	572.22	572.66
H	706+97.72	-18.75	572.49	572.91
I	707+07.72	-18.75	572.75	573.14
J	707+17.72	-18.75	573.01	573.35
K	707+27.72	-18.75	573.27	573.53
L	707+37.72	-18.75	573.52	573.69
℄ Brg. E. Abut.	707+52.72	-18.75	573.89	573.91
Bk. E. Abut.	707+54.56	-18.75	573.93	573.95

WB P.G.L. & BREAKLINE 2

Location	Station	Offset	Theoretical Grade Elevations	Theoretical Grade Elevations Adjusted For Dead Load Deflection and Grinding
Bk. W. Abut.	706+15.60	-13.50	570.40	570.42
℄ Brg. W. Abut.	706+17.44	-13.50	570.45	570.47
A	706+27.44	-13.50	570.71	570.83
B	706+37.44	-13.50	570.97	571.19
C	706+47.44	-13.50	571.24	571.54
D	706+57.44	-13.50	571.50	571.87
E	706+67.44	-13.50	571.77	572.17
F	706+77.44	-13.50	572.03	572.46
G	706+87.44	-13.50	572.30	572.73
H	706+97.44	-13.50	572.56	572.98
I	707+07.44	-13.50	572.82	573.21
J	707+17.44	-13.50	573.08	573.42
K	707+27.44	-13.50	573.34	573.60
L	707+37.44	-13.50	573.59	573.76
℄ Brg. E. Abut.	707+52.44	-13.50	573.96	573.98
Bk. E. Abut.	707+54.27	-13.50	574.00	574.02

GIRDER 10

Location	Station	Offset	Theoretical Grade Elevations	Theoretical Grade Elevations Adjusted For Dead Load Deflection and Grinding
Bk. W. Abut.	706+15.47	-11.13	570.35	570.37
℄ Brg. W. Abut.	706+17.31	-11.13	570.40	570.42
A	706+27.31	-11.13	570.66	570.78
B	706+37.31	-11.13	570.92	571.14
C	706+47.31	-11.13	571.19	571.48
D	706+57.31	-11.13	571.45	571.81
E	706+67.31	-11.13	571.72	572.12
F	706+77.31	-11.13	571.98	572.41
G	706+87.31	-11.13	572.24	572.68
H	706+97.31	-11.13	572.51	572.93
I	707+07.31	-11.13	572.77	573.16
J	707+17.31	-11.13	573.03	573.37
K	707+27.31	-11.13	573.29	573.55
L	707+37.31	-11.13	573.54	573.71
℄ Brg. E. Abut.	707+52.31	-11.13	573.91	573.93
Bk. E. Abut.	707+54.14	-11.13	573.95	573.97

GIRDER 11

Location	Station	Offset	Theoretical Grade Elevations	Theoretical Grade Elevations Adjusted For Dead Load Deflection and Grinding
Bk. W. Abut.	706+15.06	-3.50	570.18	570.20
℄ Brg. W. Abut.	706+16.90	-3.50	570.23	570.25
A	706+26.90	-3.50	570.50	570.62
B	706+36.90	-3.50	570.76	570.98
C	706+46.90	-3.50	571.02	571.33
D	706+56.90	-3.50	571.29	571.66
E	706+66.90	-3.50	571.55	571.98
F	706+76.90	-3.50	571.82	572.27
G	706+86.90	-3.50	572.08	572.54
H	706+96.90	-3.50	572.35	572.78
I	707+06.90	-3.50	572.61	573.01
J	707+16.90	-3.50	572.87	573.22
K	707+26.90	-3.50	573.13	573.40
L	707+36.90	-3.50	573.38	573.55
℄ Brg. E. Abut.	707+51.90	-3.50	573.75	573.77
Bk. E. Abut.	707+53.73	-3.50	573.79	573.81

NOTE:

1. Offsets are measured in feet and are given relative to ℄ I-80.

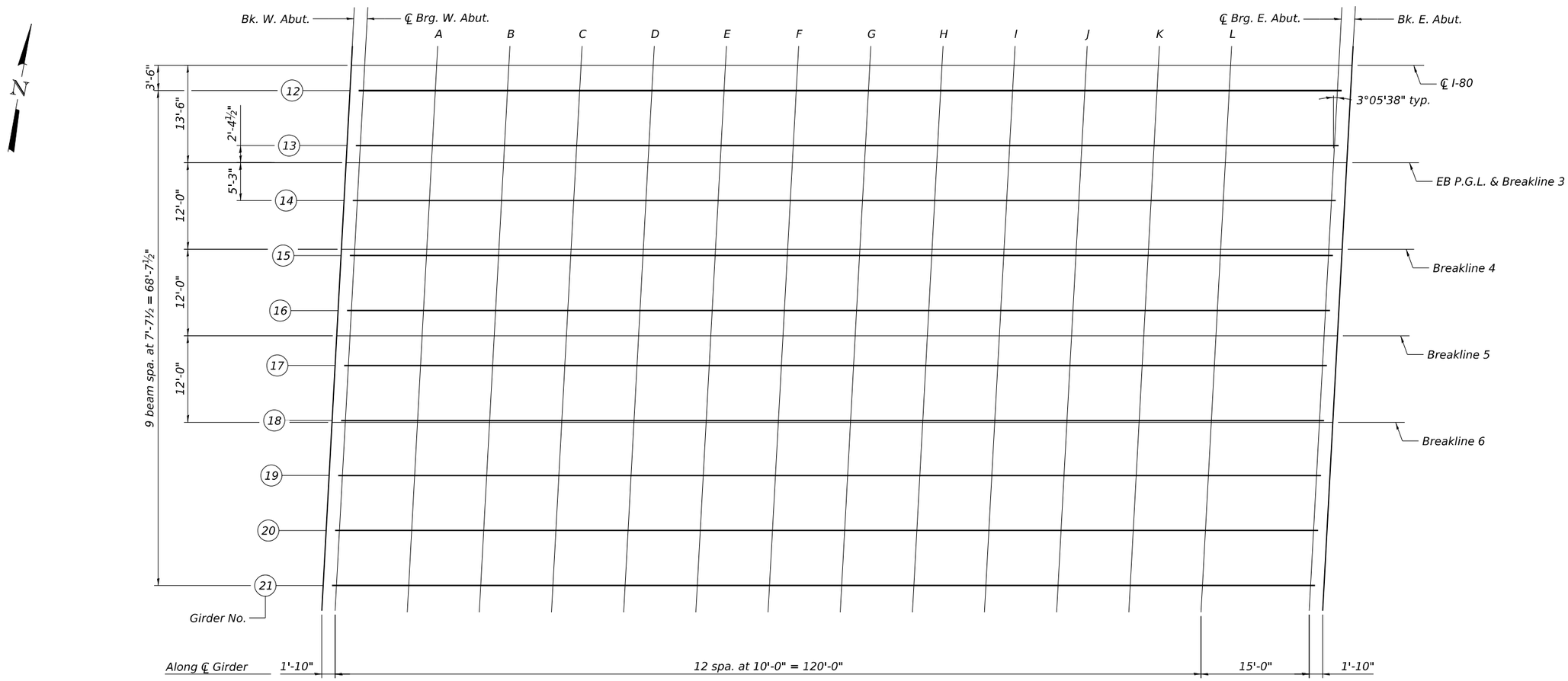

PLAN

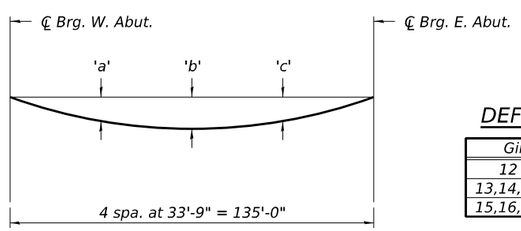

DEAD LOAD DEFLECTION DIAGRAM

(Includes weight of concrete only.)

The above deflections are not to be used in the field if the engineer is working from the grade elevations adjusted for dead load deflections and grinding as shown on sheets SB-13 & SB-14 of SB-53 .

DEFLECTION DIAGRAM TABLE

Girder	a	b	c
12 & 21	3¾"	5¼"	3¾"
13,14,19 & 20	3⅝"	5"	3⅝"
15,16,17 & 18	3¼"	4⅜"	3¼"

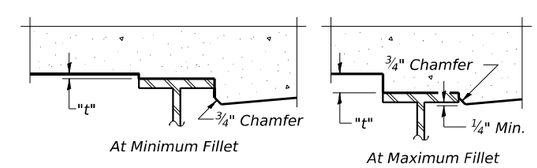

To determine "t": After all structural steel has been erected, elevations of the top flanges of the beams shall be taken at intervals shown. These elevations subtracted from the "Theoretical Grade Elevations Adjusted for Dead Load Deflection and Grinding" shown, on Sheets SB-13 thru SB-14 of SB-53, minus the initial slab thickness prior to grinding, equals the fillet heights "t" above top flange of beams.

The slab is to be ground after curing to achieve smoothness, but the slab is not to be ground to elevations below the "Theoretical Grade Elevations" on Sheets SB-13 thru SB-14 of SB-53 . For grinding the deck, see Special Provisions.

FILLET HEIGHTS

MODEL: Default
FILE NAME: 0998310-62F94-012-ETOSL.dgn

BURNS McDONNELL	USER NAME =	DESIGNED - ECK	REVISED -
		CHECKED - GEK	REVISED -
	PLOT SCALE =	DRAWN - ECK	REVISED -
	PLOT DATE =	CHECKED - KMD	REVISED -

STATE OF ILLINOIS
DEPARTMENT OF TRANSPORTATION

TOP OF DECK SLAB ELEVATIONS LAYOUT - EB
STRUCTURE NO. 099-8310

SHEET SB-12 OF SB-53 SHEETS

F.A.I. RTE.	SECTION	COUNTY	TOTAL SHEETS	SHEET NO.
80	2017-057F	WILL	1342	788
		CONTRACT NO. 62F94		
		ILLINOIS	FED. AID PROJECT	

10/27/2025 4:58:46 PM

GIRDER 12

Location	Station	Offset	Theoretical Grade Elevations	Theoretical Grade Elevations Adjusted For Dead Load Deflection and Grinding
Bk. W. Abut.	706+14.68	3.50	570.17	570.19
℄ Brg. W. Abut.	706+16.52	3.50	570.22	570.24
A	706+26.52	3.50	570.49	570.61
B	706+36.52	3.50	570.75	570.97
C	706+46.52	3.50	571.01	571.32
D	706+56.52	3.50	571.28	571.65
E	706+66.52	3.50	571.54	571.97
F	706+76.52	3.50	571.81	572.26
G	706+86.52	3.50	572.07	572.53
H	706+96.52	3.50	572.34	572.77
I	707+06.52	3.50	572.60	573.00
J	707+16.52	3.50	572.86	573.21
K	707+26.52	3.50	573.12	573.39
L	707+36.52	3.50	573.37	573.54
℄ Brg. E. Abut.	707+51.52	3.50	573.74	573.76
Bk. E. Abut.	707+53.35	3.50	573.78	573.80

GIRDER 13

Location	Station	Offset	Theoretical Grade Elevations	Theoretical Grade Elevations Adjusted For Dead Load Deflection and Grinding
Bk. W. Abut.	706+14.27	11.13	570.32	570.34
℄ Brg. W. Abut.	706+16.10	11.13	570.36	570.38
A	706+26.10	11.13	570.63	570.75
B	706+36.10	11.13	570.89	571.11
C	706+46.10	11.13	571.16	571.45
D	706+56.10	11.13	571.42	571.78
E	706+66.10	11.13	571.68	572.09
F	706+76.10	11.13	571.95	572.38
G	706+86.10	11.13	572.21	572.65
H	706+96.10	11.13	572.48	572.90
I	707+06.10	11.13	572.74	573.13
J	707+16.10	11.13	573.00	573.34
K	707+26.10	11.13	573.26	573.52
L	707+36.10	11.13	573.51	573.68
℄ Brg. E. Abut.	707+51.10	11.13	573.88	573.90
Bk. E. Abut.	707+52.94	11.13	573.92	573.94

EB P.G.L. & BREAKLINE 3

Location	Station	Offset	Theoretical Grade Elevations	Theoretical Grade Elevations Adjusted For Dead Load Deflection and Grinding
Bk. W. Abut.	706+14.14	13.50	570.36	570.38
℄ Brg. W. Abut.	706+15.98	13.50	570.41	570.43
A	706+25.98	13.50	570.67	570.79
B	706+35.98	13.50	570.94	571.15
C	706+45.98	13.50	571.20	571.50
D	706+55.98	13.50	571.46	571.83
E	706+65.98	13.50	571.73	572.14
F	706+75.98	13.50	571.99	572.43
G	706+85.98	13.50	572.26	572.69
H	706+95.98	13.50	572.52	572.94
I	707+05.98	13.50	572.79	573.17
J	707+15.98	13.50	573.05	573.38
K	707+25.98	13.50	573.30	573.56
L	707+35.98	13.50	573.56	573.72
℄ Brg. E. Abut.	707+50.98	13.50	573.92	573.94
Bk. E. Abut.	707+52.81	13.50	573.97	573.99

GIRDER 14

Location	Station	Offset	Theoretical Grade Elevations	Theoretical Grade Elevations Adjusted For Dead Load Deflection and Grinding
Bk. W. Abut.	706+13.86	18.75	570.46	570.48
℄ Brg. W. Abut.	706+15.69	18.75	570.51	570.53
A	706+25.69	18.75	570.77	570.89
B	706+35.69	18.75	571.03	571.25
C	706+45.69	18.75	571.30	571.59
D	706+55.69	18.75	571.56	571.92
E	706+65.69	18.75	571.83	572.23
F	706+75.69	18.75	572.09	572.52
G	706+85.69	18.75	572.35	572.79
H	706+95.69	18.75	572.62	573.04
I	707+05.69	18.75	572.88	573.27
J	707+15.69	18.75	573.14	573.48
K	707+25.69	18.75	573.40	573.66
L	707+35.69	18.75	573.65	573.82
℄ Brg. E. Abut.	707+50.69	18.75	574.02	574.04
Bk. E. Abut.	707+52.53	18.75	574.07	574.09

BREAKLINE 4

Location	Station	Offset	Theoretical Grade Elevations	Theoretical Grade Elevations Adjusted For Dead Load Deflection and Grinding
Bk. W. Abut.	706+13.49	25.50	570.58	570.60
℄ Brg. W. Abut.	706+15.33	25.50	570.63	570.65
A	706+25.33	25.50	570.89	571.01
B	706+35.33	25.50	571.16	571.35
C	706+45.33	25.50	571.42	571.69
D	706+55.33	25.50	571.69	572.01
E	706+65.33	25.50	571.95	572.32
F	706+75.33	25.50	572.22	572.60
G	706+85.33	25.50	572.48	572.87
H	706+95.33	25.50	572.74	573.12
I	707+05.33	25.50	573.01	573.36
J	707+15.33	25.50	573.27	573.57
K	707+25.33	25.50	573.53	573.76
L	707+35.33	25.50	573.78	573.93
℄ Brg. E. Abut.	707+50.33	25.50	574.15	574.17
Bk. E. Abut.	707+52.16	25.50	574.19	574.21

GIRDER 15

Location	Station	Offset	Theoretical Grade Elevations	Theoretical Grade Elevations Adjusted For Dead Load Deflection and Grinding
Bk. W. Abut.	706+13.44	26.38	570.59	570.61
℄ Brg. W. Abut.	706+15.28	26.38	570.64	570.66
A	706+25.28	26.38	570.91	571.02
B	706+35.28	26.38	571.17	571.36
C	706+45.28	26.38	571.43	571.70
D	706+55.28	26.38	571.70	572.02
E	706+65.28	26.38	571.96	572.32
F	706+75.28	26.38	572.23	572.61
G	706+85.28	26.38	572.49	572.88
H	706+95.28	26.38	572.76	573.13
I	707+05.28	26.38	573.02	573.36
J	707+15.28	26.38	573.28	573.58
K	707+25.28	26.38	573.54	573.77
L	707+35.28	26.38	573.79	573.94
℄ Brg. E. Abut.	707+50.28	26.38	574.16	574.18
Bk. E. Abut.	707+52.12	26.38	574.20	574.23

GIRDER 16

Location	Station	Offset	Theoretical Grade Elevations	Theoretical Grade Elevations Adjusted For Dead Load Deflection and Grinding
Bk. W. Abut.	706+13.03	34.00	570.70	570.72
℄ Brg. W. Abut.	706+14.87	34.00	570.75	570.77
A	706+24.87	34.00	571.01	571.12
B	706+34.87	34.00	571.27	571.47
C	706+44.87	34.00	571.54	571.80
D	706+54.87	34.00	571.80	572.12
E	706+64.87	34.00	572.07	572.43
F	706+74.87	34.00	572.33	572.71
G	706+84.87	34.00	572.59	572.98
H	706+94.87	34.00	572.86	573.23
I	707+04.87	34.00	573.12	573.47
J	707+14.87	34.00	573.39	573.68
K	707+24.87	34.00	573.64	573.87
L	707+34.87	34.00	573.90	574.05
℄ Brg. E. Abut.	707+49.87	34.00	574.26	574.29
Bk. E. Abut.	707+51.70	34.00	574.31	574.33

BREAKLINE 5

Location	Station	Offset	Theoretical Grade Elevations	Theoretical Grade Elevations Adjusted For Dead Load Deflection and Grinding
Bk. W. Abut.	706+12.84	37.50	570.75	570.77
℄ Brg. W. Abut.	706+14.68	37.50	570.79	570.81
A	706+24.68	37.50	571.06	571.17
B	706+34.68	37.50	571.32	571.51
C	706+44.68	37.50	571.59	571.85
D	706+54.68	37.50	571.85	572.17
E	706+64.68	37.50	572.11	572.47
F	706+74.68	37.50	572.38	572.76
G	706+84.68	37.50	572.64	573.03
H	706+94.68	37.50	572.91	573.28
I	707+04.68	37.50	573.17	573.51
J	707+14.68	37.50	573.43	573.73
K	707+24.68	37.50	573.69	573.92
L	707+34.68	37.50	573.94	574.09
℄ Brg. E. Abut.	707+49.68	37.50	574.31	574.33
Bk. E. Abut.	707+51.51	37.50	574.36	574.38

NOTE:

1. Offsets are measured in feet and are given relative to ℄ I-80.

GIRDER 17

Location	Station	Offset	Theoretical Grade Elevations	Theoretical Grade Elevations Adjusted For Dead Load Deflection and Grinding
Bk. W. Abut.	706+12.62	41.63	570.68	570.70
℄ Brg. W. Abut.	706+14.46	41.63	570.73	570.75
A	706+24.46	41.63	570.99	571.10
B	706+34.46	41.63	571.25	571.45
C	706+44.46	41.63	571.52	571.78
D	706+54.46	41.63	571.78	572.10
E	706+64.46	41.63	572.05	572.41
F	706+74.46	41.63	572.31	572.69
G	706+84.46	41.63	572.57	572.96
H	706+94.46	41.63	572.84	573.21
I	707+04.46	41.63	573.10	573.45
J	707+14.46	41.63	573.37	573.66
K	707+24.46	41.63	573.62	573.85
L	707+34.46	41.63	573.88	574.03
℄ Brg. E. Abut.	707+49.46	41.63	574.24	574.27
Bk. E. Abut.	707+51.29	41.63	574.29	574.31

GIRDER 18

Location	Station	Offset	Theoretical Grade Elevations	Theoretical Grade Elevations Adjusted For Dead Load Deflection and Grinding
Bk. W. Abut.	706+12.21	49.25	570.56	570.58
℄ Brg. W. Abut.	706+14.04	49.25	570.60	570.62
A	706+24.04	49.25	570.86	570.97
B	706+34.04	49.25	571.13	571.32
C	706+44.04	49.25	571.39	571.66
D	706+54.04	49.25	571.66	571.98
E	706+64.04	49.25	571.92	572.28
F	706+74.04	49.25	572.19	572.57
G	706+84.04	49.25	572.45	572.84
H	706+94.04	49.25	572.71	573.09
I	707+04.04	49.25	572.98	573.32
J	707+14.04	49.25	573.24	573.53
K	707+24.04	49.25	573.50	573.73
L	707+34.04	49.25	573.75	573.90
℄ Brg. E. Abut.	707+49.04	49.25	574.12	574.14
Bk. E. Abut.	707+50.88	49.25	574.17	574.19

BREAKLINE 6

Location	Station	Offset	Theoretical Grade Elevations	Theoretical Grade Elevations Adjusted For Dead Load Deflection and Grinding
Bk. W. Abut.	706+12.19	49.50	570.55	570.57
℄ Brg. W. Abut.	706+14.03	49.50	570.60	570.62
A	706+24.03	49.50	570.86	570.97
B	706+34.03	49.50	571.12	571.32
C	706+44.03	49.50	571.39	571.65
D	706+54.03	49.50	571.65	571.97
E	706+64.03	49.50	571.92	572.28
F	706+74.03	49.50	572.18	572.57
G	706+84.03	49.50	572.45	572.83
H	706+94.03	49.50	572.71	573.08
I	707+04.03	49.50	572.97	573.32
J	707+14.03	49.50	573.24	573.53
K	707+24.03	49.50	573.49	573.72
L	707+34.03	49.50	573.75	573.90
℄ Brg. E. Abut.	707+49.03	49.50	574.12	574.14
Bk. E. Abut.	707+50.87	49.50	574.16	574.18

GIRDER 19

Location	Station	Offset	Theoretical Grade Elevations	Theoretical Grade Elevations Adjusted For Dead Load Deflection and Grinding
Bk. W. Abut.	706+11.80	56.88	570.40	570.42
℄ Brg. W. Abut.	706+13.63	56.88	570.44	570.46
A	706+23.63	56.88	570.70	570.82
B	706+33.63	56.88	570.97	571.18
C	706+43.63	56.88	571.23	571.53
D	706+53.63	56.88	571.49	571.86
E	706+63.63	56.88	571.76	572.17
F	706+73.63	56.88	572.02	572.46
G	706+83.63	56.88	572.29	572.73
H	706+93.63	56.88	572.55	572.97
I	707+03.63	56.88	572.82	573.20
J	707+13.63	56.88	573.08	573.41
K	707+23.63	56.88	573.34	573.59
L	707+33.63	56.88	573.59	573.76
℄ Brg. E. Abut.	707+48.63	56.88	573.96	573.98
Bk. E. Abut.	707+50.47	56.88	574.00	574.02

GIRDER 20

Location	Station	Offset	Theoretical Grade Elevations	Theoretical Grade Elevations Adjusted For Dead Load Deflection and Grinding
Bk. W. Abut.	706+11.38	64.50	570.23	570.25
℄ Brg. W. Abut.	706+13.22	64.50	570.27	570.30
A	706+23.22	64.50	570.54	570.66
B	706+33.22	64.50	570.80	571.02
C	706+43.22	64.50	571.07	571.36
D	706+53.22	64.50	571.33	571.69
E	706+63.22	64.50	571.60	572.00
F	706+73.22	64.50	571.86	572.29
G	706+83.22	64.50	572.12	572.56
H	706+93.22	64.50	572.39	572.81
I	707+03.22	64.50	572.65	573.04
J	707+13.22	64.50	572.92	573.25
K	707+23.22	64.50	573.17	573.43
L	707+33.22	64.50	573.43	573.60
℄ Brg. E. Abut.	707+48.22	64.50	573.80	573.82
Bk. E. Abut.	707+50.06	64.50	573.84	573.86

GIRDER 21

Location	Station	Offset	Theoretical Grade Elevations	Theoretical Grade Elevations Adjusted For Dead Load Deflection and Grinding
Bk. W. Abut.	706+10.97	72.13	570.07	570.09
℄ Brg. W. Abut.	706+12.81	72.13	570.11	570.13
A	706+22.81	72.13	570.38	570.50
B	706+32.81	72.13	570.64	570.86
C	706+42.81	72.13	570.90	571.21
D	706+52.81	72.13	571.17	571.54
E	706+62.81	72.13	571.43	571.86
F	706+72.81	72.13	571.70	572.15
G	706+82.81	72.13	571.96	572.42
H	706+92.81	72.13	572.22	572.66
I	707+02.81	72.13	572.49	572.89
J	707+12.81	72.13	572.75	573.10
K	707+22.81	72.13	573.01	573.28
L	707+32.81	72.13	573.26	573.44
℄ Brg. E. Abut.	707+47.81	72.13	573.63	573.66
Bk. E. Abut.	707+49.64	72.13	573.68	573.70

NOTE:

1. Offsets are measured in feet and are given relative to ℄ I-80.

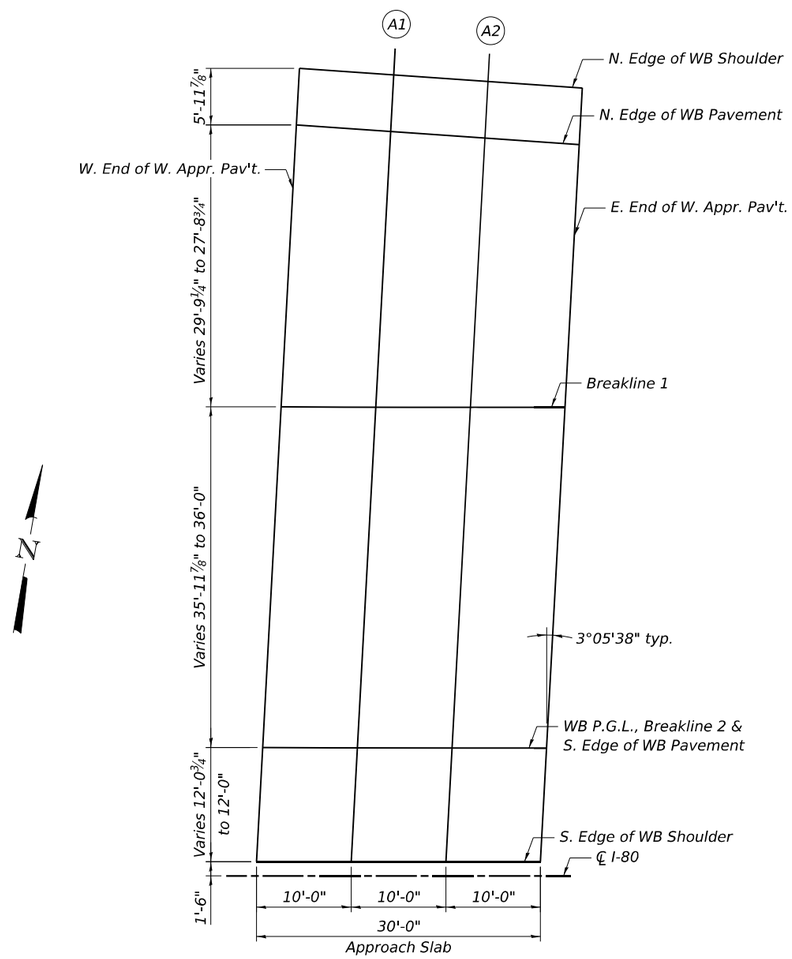

WEST APPROACH SLAB

N. EDGE OF WB SHOULDER

Location	Station	Offset	Theoretical Grade Elevations	Theoretical Grade Elevations Adjusted For Grinding
W. End W. Appr. Pav't.	705+90.48	-85.31	568.48	568.50
A1	706+00.44	-84.61	568.76	568.78
A2	706+10.41	-83.92	569.03	569.05
E. End W. Appr. Pav't.	706+20.37	-83.22	569.31	569.33

N. EDGE OF WB PAVEMENT

Location	Station	Offset	Theoretical Grade Elevations	Theoretical Grade Elevations Adjusted For Grinding
W. End W. Appr. Pav't.	705+90.16	-79.32	568.59	568.61
A1	706+00.12	-78.62	568.87	568.89
A2	706+10.08	-77.93	569.14	569.16
E. End W. Appr. Pav't.	706+20.04	-77.23	569.42	569.44

BREAKLINE 1

Location	Station	Offset	Theoretical Grade Elevations	Theoretical Grade Elevations Adjusted For Grinding
W. End W. Appr. Pav't.	705+88.55	-49.50	569.14	569.16
A1	705+98.54	-49.50	569.41	569.43
A2	706+08.54	-49.50	569.67	569.69
E. End W. Appr. Pav't.	706+18.54	-49.50	569.94	569.96

WB P.G.L., BREAKLINE 2 & S. EDGE OF WB PAVEMENT

Location	Station	Offset	Theoretical Grade Elevations	Theoretical Grade Elevations Adjusted For Grinding
W. End W. Appr. Pav't.	705+86.60	-13.50	569.63	569.65
A1	705+96.60	-13.50	569.90	569.92
A2	706+06.60	-13.50	570.16	570.18
E. End W. Appr. Pav't.	706+16.60	-13.50	570.42	570.45

S. EDGE OF WB SHOULDER

Location	Station	Offset	Theoretical Grade Elevations	Theoretical Grade Elevations Adjusted For Grinding
W. End W. Appr. Pav't.	705+85.95	-1.50	569.37	569.40
A1	705+95.95	-1.50	569.64	569.66
A2	706+05.95	-1.50	569.90	569.92
E. End W. Appr. Pav't.	706+15.95	-1.50	570.17	570.19

NOTE:

1. Offsets are measured in feet and are given relative to ℄ I-80.

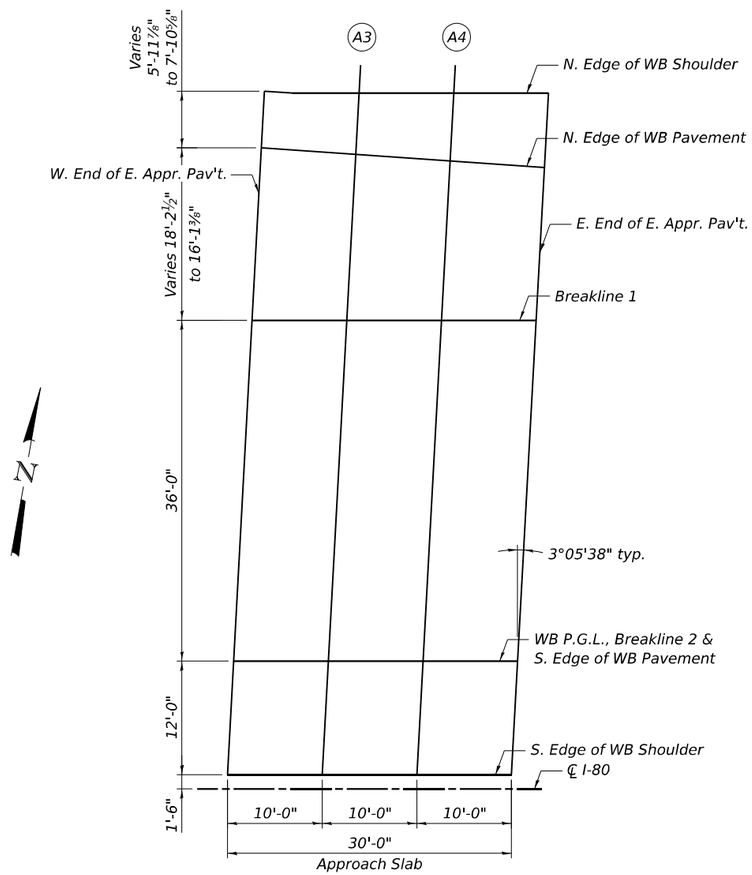

EAST APPROACH SLAB

N. EDGE OF WB SHOULDER

Location	Station	Offset	Theoretical Grade Elevations	Theoretical Grade Elevations Adjusted For Grinding
W. End E. Appr. Pav't.	707+56.52	-73.690	573.03	573.05
A3	707+66.52	-73.500	573.27	573.29
A4	707+76.52	-73.500	573.50	573.52
E. End E. Appr. Pav't.	707+86.51	-73.500	573.73	573.75

N. EDGE OF WB PAVEMENT

Location	Station	Offset	Theoretical Grade Elevations	Theoretical Grade Elevations Adjusted For Grinding
W. End E. Appr. Pav't.	707+56.20	-67.71	573.14	573.17
A3	707+66.16	-67.01	573.39	573.41
A4	707+76.12	-66.32	573.64	573.66
E. End E. Appr. Pav't.	707+86.08	-65.62	573.88	573.90

BREAKLINE 1

Location	Station	Offset	Theoretical Grade Elevations	Theoretical Grade Elevations Adjusted For Grinding
W. End E. Appr. Pav't.	707+55.22	-49.50	573.49	573.51
A3	707+65.21	-49.50	573.72	573.74
A4	707+75.21	-49.50	573.95	573.97
E. End E. Appr. Pav't.	707+85.21	-49.50	574.18	574.20

WB P.G.L., BREAKLINE 2 & S. EDGE OF WB PAVEMENT

Location	Station	Offset	Theoretical Grade Elevations	Theoretical Grade Elevations Adjusted For Grinding
W. End E. Appr. Pav't.	707+53.27	-13.50	573.98	574.00
A3	707+63.27	-13.50	574.22	574.24
A4	707+73.27	-13.50	574.45	574.47
E. End E. Appr. Pav't.	707+83.27	-13.50	574.68	574.70

S. EDGE OF WB SHOULDER

Location	Station	Offset	Theoretical Grade Elevations	Theoretical Grade Elevations Adjusted For Grinding
W. End E. Appr. Pav't.	707+52.62	-1.50	573.72	573.74
A3	707+62.61	-1.50	573.96	573.98
A4	707+72.61	-1.50	574.19	574.21
E. End E. Appr. Pav't.	707+82.61	-1.50	574.42	574.44

NOTE:

1. Offsets are measured in feet and are given relative to ℄ I-80.

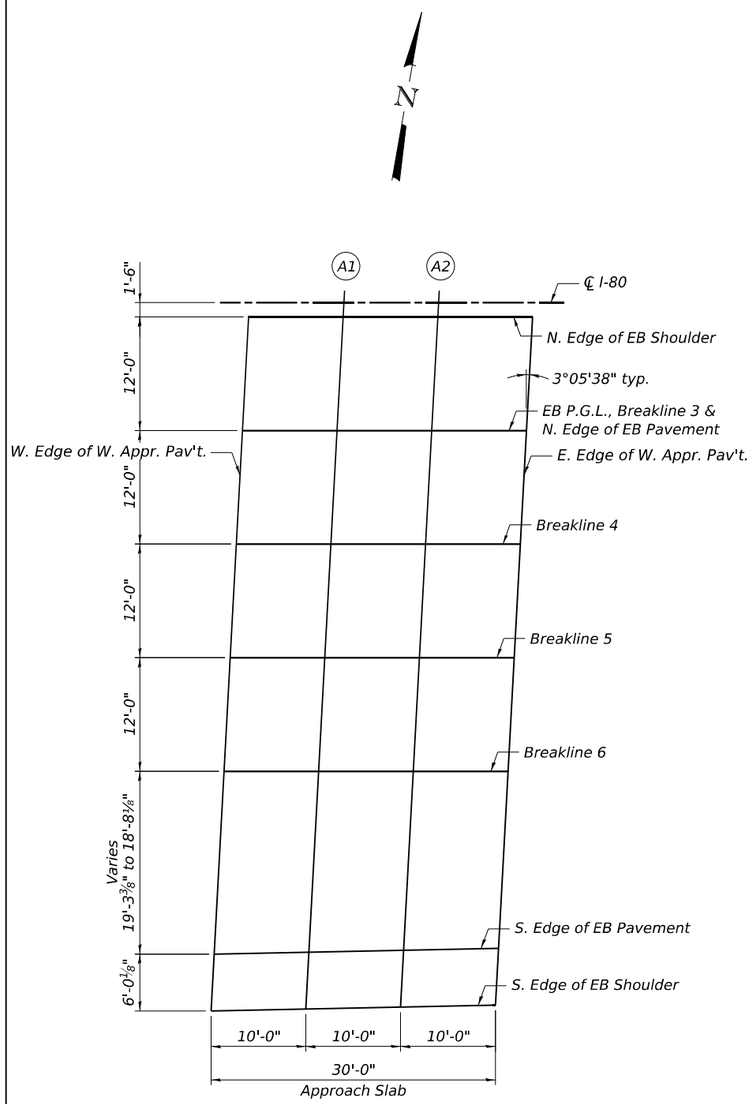

WEST APPROACH SLAB

N. EDGE OF EB SHOULDER

Location	Station	Offset	Theoretical Grade Elevations	Theoretical Grade Elevations Adjusted For Grinding
W. End W. Appr. Pav't.	705+85.79	1.50	569.37	569.39
A1	705+95.79	1.50	569.63	569.66
A2	706+05.79	1.50	569.90	569.92
E. End W. Appr. Pav't.	706+15.79	1.50	570.16	570.18

EB P.G.L., BREAKLINE 3 & N. EDGE OF EB PAVEMENT

Location	Station	Offset	Theoretical Grade Elevations	Theoretical Grade Elevations Adjusted For Grinding
W. End W. Appr. Pav't.	705+85.14	13.50	569.59	569.61
A1	705+95.14	13.50	569.86	569.88
A2	706+05.14	13.50	570.12	570.14
E. End W. Appr. Pav't.	706+15.14	13.50	570.39	570.41

BREAKLINE 4

Location	Station	Offset	Theoretical Grade Elevations	Theoretical Grade Elevations Adjusted For Grinding
W. End W. Appr. Pav't.	705+84.49	25.50	569.82	569.84
A1	705+94.49	25.50	570.08	570.10
A2	706+04.49	25.50	570.34	570.37
E. End W. Appr. Pav't.	706+14.49	25.50	570.61	570.63

BREAKLINE 5

Location	Station	Offset	Theoretical Grade Elevations	Theoretical Grade Elevations Adjusted For Grinding
W. End W. Appr. Pav't.	705+83.84	37.50	569.98	570.00
A1	705+93.84	37.50	570.24	570.26
A2	706+03.84	37.50	570.51	570.53
E. End W. Appr. Pav't.	706+13.84	37.50	570.77	570.79

BREAKLINE 6

Location	Station	Offset	Theoretical Grade Elevations	Theoretical Grade Elevations Adjusted For Grinding
W. End W. Appr. Pav't.	705+83.19	49.50	569.92	569.94
A1	705+93.19	49.50	570.14	570.16
A2	706+03.19	49.50	570.36	570.38
E. End W. Appr. Pav't.	706+13.19	49.50	570.57	570.60

S. EDGE OF EB PAVEMENT

Location	Station	Offset	Theoretical Grade Elevations	Theoretical Grade Elevations Adjusted For Grinding
W. End W. Appr. Pav't.	705+82.15	68.78	569.51	569.53
A1	705+92.16	68.58	569.73	569.75
A2	706+02.17	68.38	569.96	569.98
E. End W. Appr. Pav't.	706+12.18	68.18	570.18	570.20

S. EDGE OF EB SHOULDER

Location	Station	Offset	Theoretical Grade Elevations	Theoretical Grade Elevations Adjusted For Grinding
W. End W. Appr. Pav't.	705+81.83	74.79	569.38	569.41
A1	705+91.84	74.59	569.61	569.63
A2	706+01.85	74.39	569.83	569.85
E. End W. Appr. Pav't.	706+11.86	74.19	570.05	570.07

NOTE:

1. Offsets are measured in feet and are given relative to ℄ I-80.

MODEL: Default
FILE NAME: 0998310-62F94-017-EWAPE.dgn
10/27/2025 4:58:59 PM

BURNS McDONNELL

USER NAME =	DESIGNED - ECK	REVISED -	
	CHECKED - GEK	REVISED -	
PLOT SCALE =	DRAWN - ECK	REVISED -	
PLOT DATE =	CHECKED - KMD	REVISED -	

STATE OF ILLINOIS
DEPARTMENT OF TRANSPORTATION

TOP OF SLAB ELEVATIONS & LAYOUT - WEST APPROACH - EB
STRUCTURE NO. 099-8310

SHEET SB-17 OF SB-53 SHEETS

F.A.I. RTE.	SECTION	COUNTY	TOTAL SHEETS	SHEET NO.
80	2017-057F	WILL	1342	793
		CONTRACT NO. 62F94		
	ILLINOIS	FED. AID PROJECT		

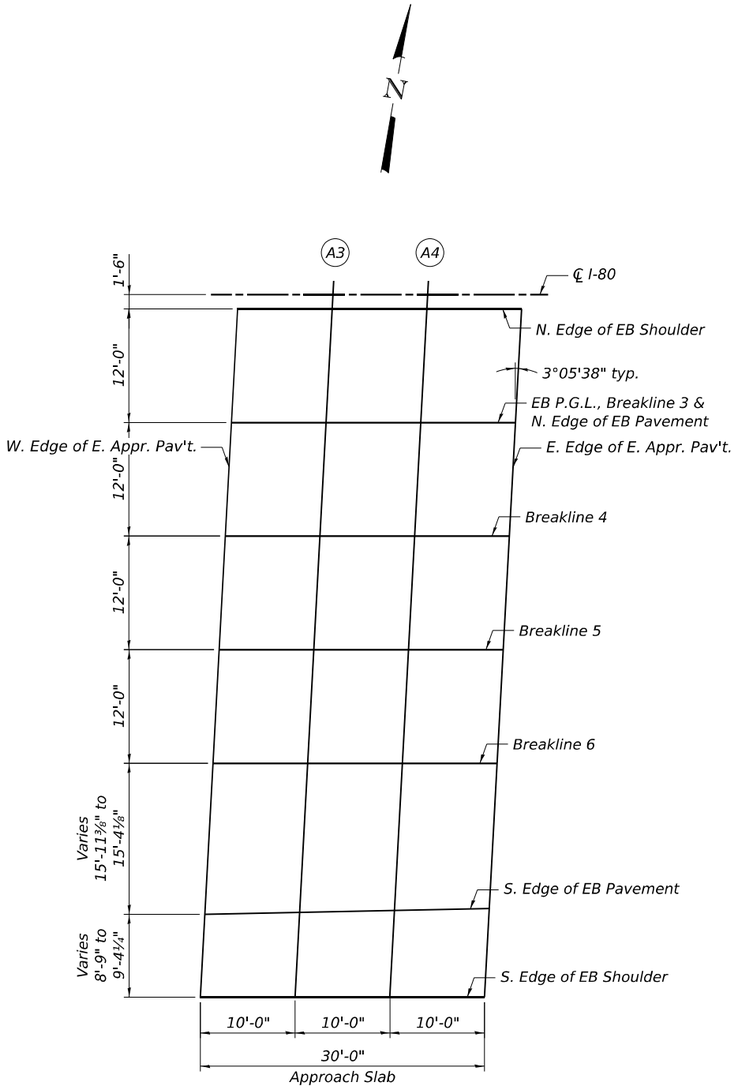

EAST APPROACH SLAB

N. EDGE OF EB SHOULDER

Location	Station	Offset	Theoretical Grade Elevations	Theoretical Grade Elevations Adjusted For Grinding
W. End E. Appr. Pav't.	707+52.46	1.50	573.72	573.74
A3	707+62.46	1.50	573.96	573.98
A4	707+72.46	1.50	574.19	574.21
E. End E. Appr. Pav't.	707+82.46	1.50	574.42	574.44

EB P.G.L., BREAKLINE 3 & N. EDGE OF EB PAVEMENT

Location	Station	Offset	Theoretical Grade Elevations	Theoretical Grade Elevations Adjusted For Grinding
W. End E. Appr. Pav't.	707+51.81	13.50	573.94	573.96
A3	707+61.81	13.50	574.18	574.20
A4	707+71.81	13.50	574.42	574.44
E. End E. Appr. Pav't.	707+81.81	13.50	574.64	574.66

BREAKLINE 4

Location	Station	Offset	Theoretical Grade Elevations	Theoretical Grade Elevations Adjusted For Grinding
W. End E. Appr. Pav't.	707+51.16	25.50	574.17	574.19
A3	707+61.16	25.50	574.41	574.43
A4	707+71.16	25.50	574.64	574.66
E. End E. Appr. Pav't.	707+81.16	25.50	574.87	574.89

BREAKLINE 5

Location	Station	Offset	Theoretical Grade Elevations	Theoretical Grade Elevations Adjusted For Grinding
W. End E. Appr. Pav't.	707+50.51	37.50	574.33	574.35
A3	707+60.51	37.50	574.57	574.59
A4	707+70.51	37.50	574.81	574.83
E. End E. Appr. Pav't.	707+80.51	37.50	575.03	575.05

BREAKLINE 6

Location	Station	Offset	Theoretical Grade Elevations	Theoretical Grade Elevations Adjusted For Grinding
W. End E. Appr. Pav't.	707+49.86	49.50	574.14	574.16
A3	707+59.86	49.50	574.38	574.40
A4	707+69.86	49.50	574.61	574.63
E. End E. Appr. Pav't.	707+79.86	49.50	574.84	574.86

S. EDGE OF EB PAVEMENT

Location	Station	Offset	Theoretical Grade Elevations	Theoretical Grade Elevations Adjusted For Grinding
W. End E. Appr. Pav't.	707+49.00	65.45	573.80	573.82
A3	707+59.01	65.25	574.04	574.06
A4	707+69.02	65.04	574.28	574.30
E. End E. Appr. Pav't.	707+79.03	64.84	574.51	574.53

S. EDGE OF EB SHOULDER

Location	Station	Offset	Theoretical Grade Elevations	Theoretical Grade Elevations Adjusted For Grinding
W. End E. Appr. Pav't.	707+48.53	74.19	573.61	573.63
A3	707+58.53	74.19	573.85	573.87
A4	707+68.53	74.19	574.09	574.11
E. End E. Appr. Pav't.	707+78.53	74.19	574.32	574.34

NOTE:

1. Offsets are measured in feet and are given relative to ℄ I-80.

MODEL: Default
FILE NAME: 0998310-62F94-018-EEAPE.dgn
10/27/2025 4:59:02 PM

BURNS McDONNELL

USER NAME =	DESIGNED - ECK	REVISED -	
	CHECKED - GEK	REVISED -	
PLOT SCALE =	DRAWN - ECK	REVISED -	
PLOT DATE =	CHECKED - KMD	REVISED -	

STATE OF ILLINOIS
DEPARTMENT OF TRANSPORTATION

TOP OF SLAB ELEVATIONS & LAYOUT - EAST APPROACH - EB
STRUCTURE NO. 099-8310

SHEET SB-18 OF SB-53 SHEETS

F.A.I. RTE.	SECTION	COUNTY	TOTAL SHEETS	SHEET NO.
80	2017-057F	WILL	1342	794
		CONTRACT NO. 62F94		
		ILLINOIS	FED. AID PROJECT	

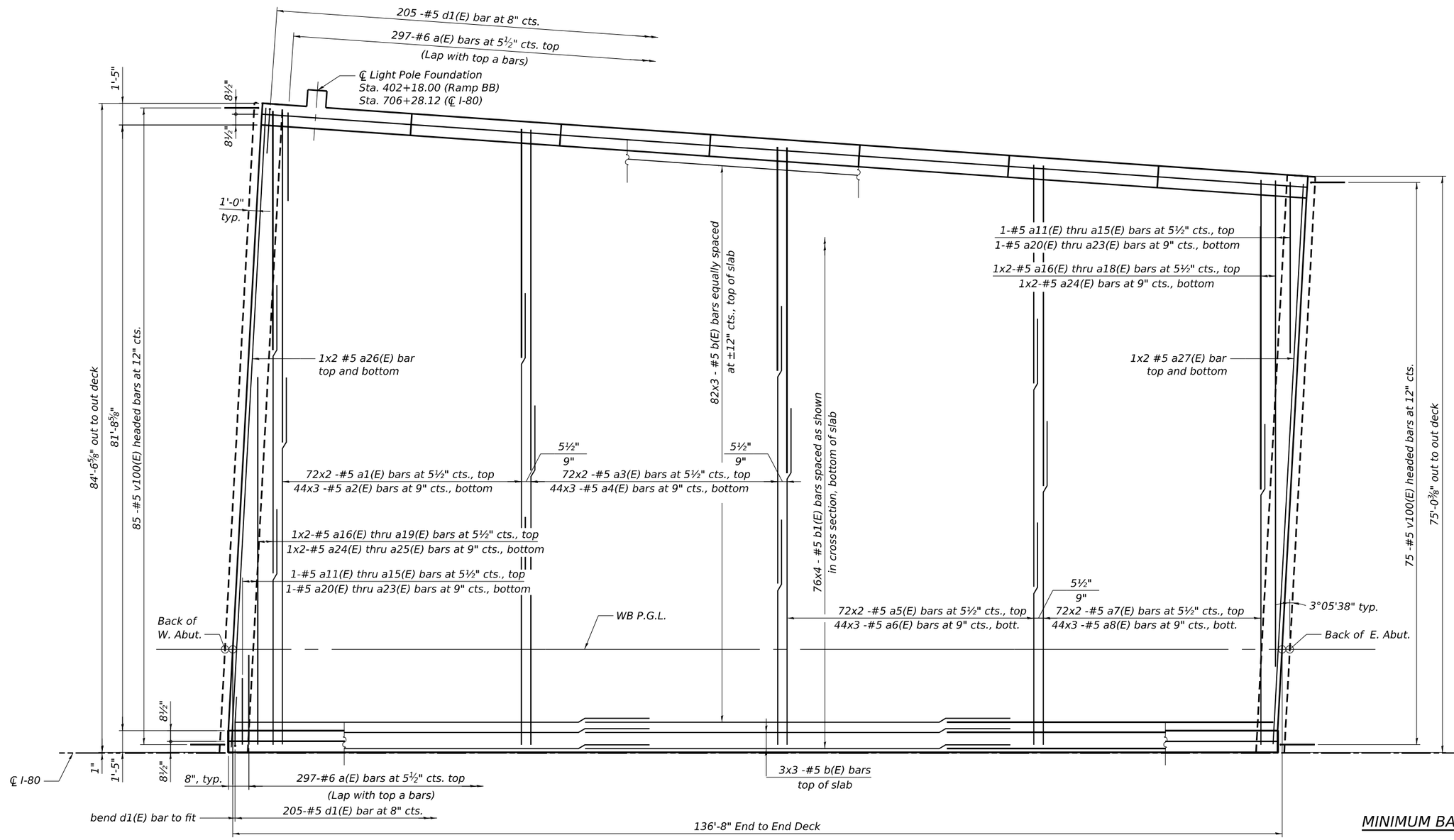

MINIMUM BAR LAP

#5 bar = 3'-6"

PLAN

N

NOTES:

1. See sheet SB-23 of SB-53 for superstructure details and Bill of Material.

2. Bars indicated thus 20x3 -#5 etc. indicates 20 lines of bars with 3 lengths per line.

MODEL: Default
FILE NAME: 0998310-62F94-019-WDKPL.dgn

BURNS McDONNELL

USER NAME =	DESIGNED - ECK	REVISED -	
	CHECKED - GEK	REVISED -	
PLOT SCALE =	DRAWN - ECK	REVISED -	
PLOT DATE =	CHECKED - SLM	REVISED -	

STATE OF ILLINOIS
DEPARTMENT OF TRANSPORTATION

DECK PLAN - WB
STRUCTURE NO. 099-8310

SHEET SB-19 OF SB-53 SHEETS

F.A.I. RTE.	SECTION	COUNTY	TOTAL SHEETS	SHEET NO.
80	2017-057F	WILL	1342	795
		CONTRACT NO. 62F94		
		ILLINOIS	FED. AID PROJECT	

10/27/2025 4:59:04 PM

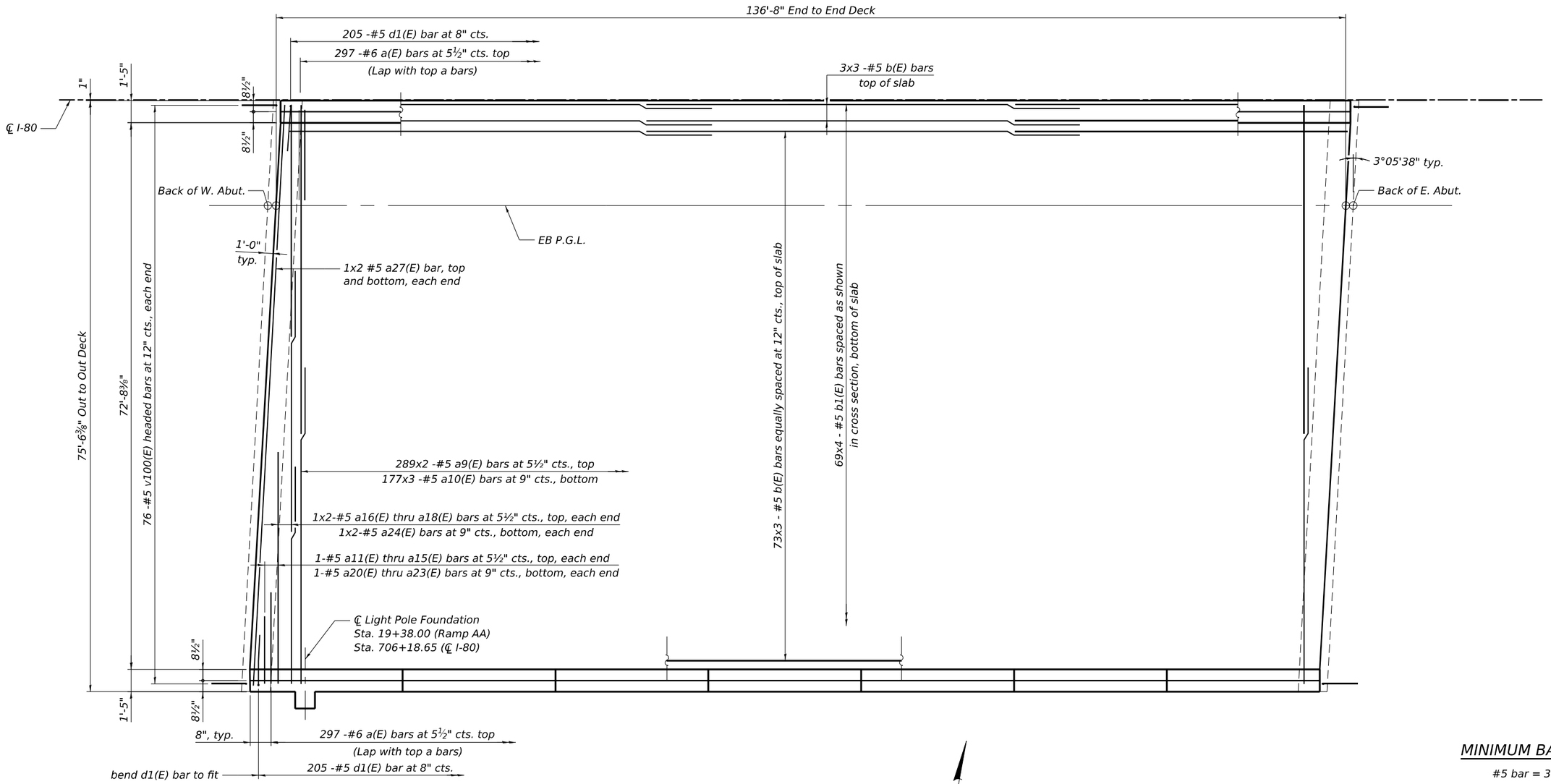

PLAN

MINIMUM BAR LAP

#5 bar = 3'-6"

NOTES:

1. See sheet SB-23 of SB-53 for superstructure details and Bill of Material.
2. Bars indicated thus 20x3 -#5 etc. indicated 20 lines of bars with 3 lengths per line.

MODEL: Default
FILE NAME: 0998310-62F94-020-EDKPL.dgn
10/27/2025 4:59:07 PM

BURNS McDONNELL

USER NAME =	DESIGNED - ECK	REVISED -	
	CHECKED - GEK	REVISED -	
PLOT SCALE =	DRAWN - ECK	REVISED -	
PLOT DATE =	CHECKED - SLM	REVISED -	

STATE OF ILLINOIS
DEPARTMENT OF TRANSPORTATION

DECK PLAN - EB
STRUCTURE NO. 099-8310

SHEET SB-20 OF SB-53 SHEETS

F.A.I. RTE.	SECTION	COUNTY	TOTAL SHEETS	SHEET NO.
80	2017-057F	WILL	1342	796

CONTRACT NO. 62F94

ILLINOIS | FED. AID PROJECT

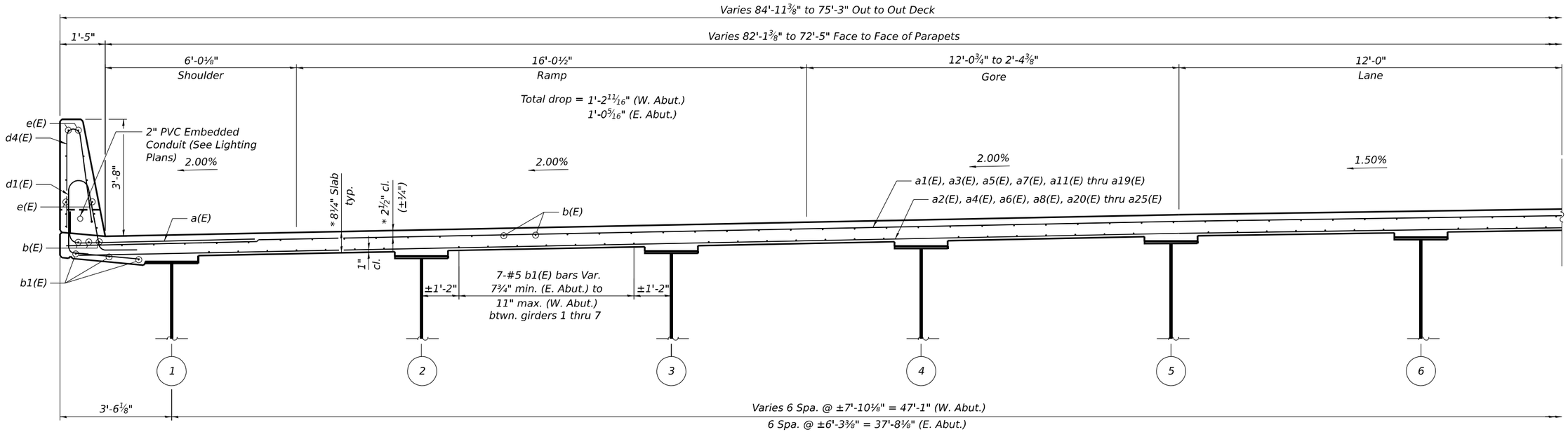

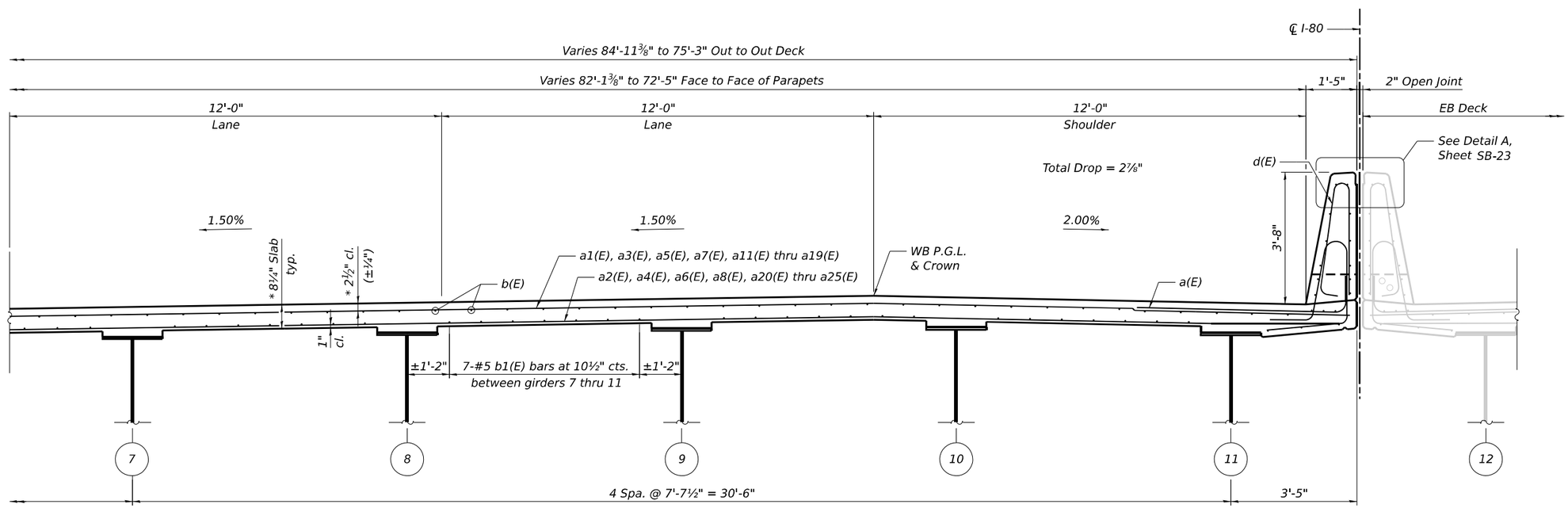

CROSS SECTION

(Looking East)

*Prior to Grinding.

NOTES:

1. Out-to-Out dimensions are taken at intersection of back of abutment (Sta. 706+14.87 & Sta. 707+53.54) and ℄ I-80.
2. Dimensions are measured at Rt. ∠s to ℄ I-80.

MODEL: Default
FILE NAME: 0998310-62F94-021-WDKXS.dgn

BURNS McDONNELL

USER NAME =	DESIGNED - ECK	REVISED -	
	CHECKED - GEK	REVISED -	
PLOT SCALE =	DRAWN - ECK	REVISED -	
PLOT DATE =	CHECKED - SLM	REVISED -	

STATE OF ILLINOIS
DEPARTMENT OF TRANSPORTATION

DECK CROSS SECTION - WB
STRUCTURE NO. 099-8310

SHEET SB-21 OF SB-53 SHEETS

F.A.I. RTE.	SECTION	COUNTY	TOTAL SHEETS	SHEET NO.
80	2017-057F	WILL	1342	797

CONTRACT NO. 62F94

ILLINOIS | FED. AID PROJECT

10/27/2025 4:59:09 PM

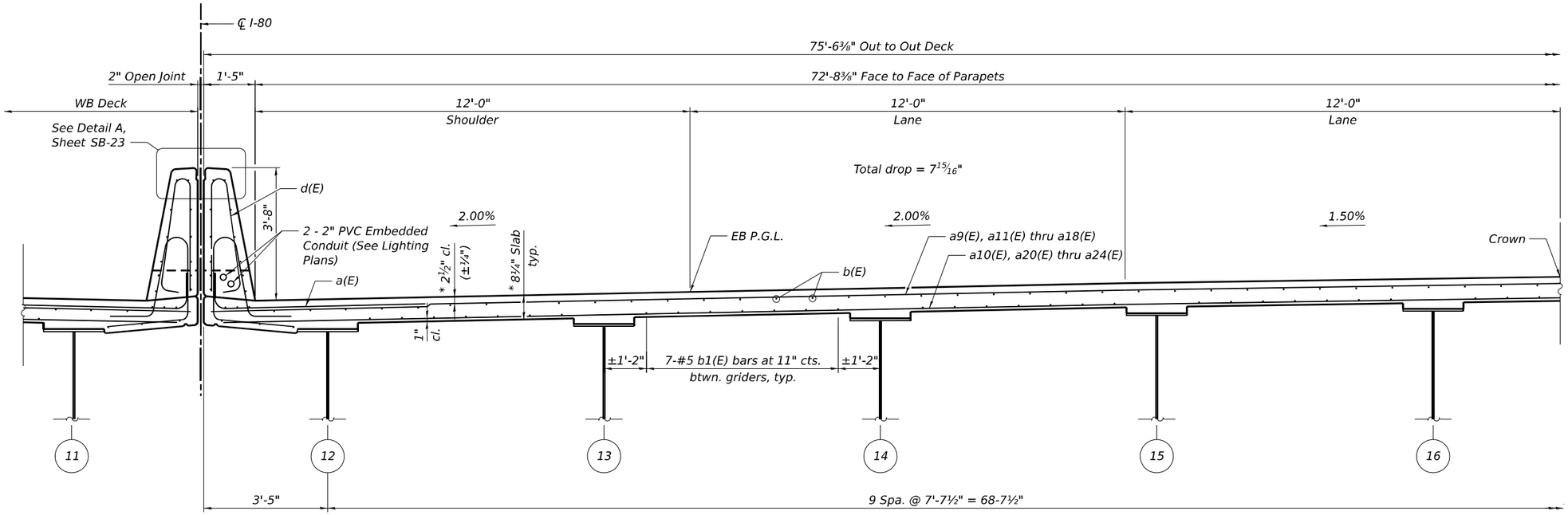

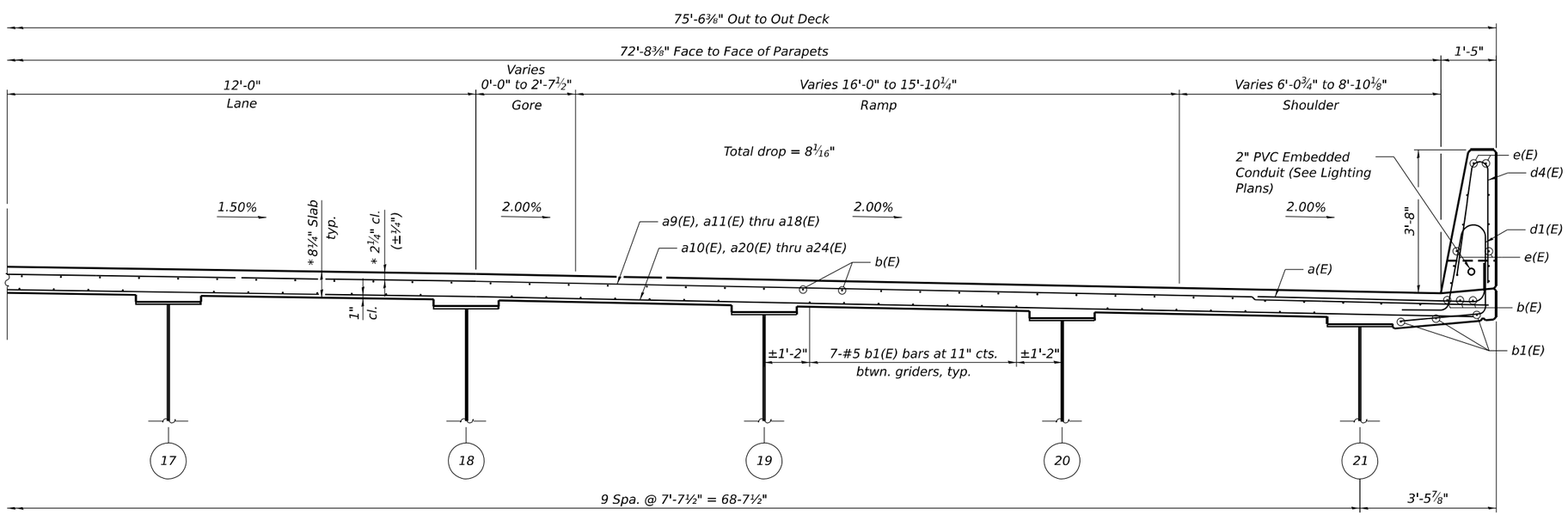

* Prior to Grinding.

CROSS SECTION

(Looking East)

NOTES:

1. Out-to-Out dimensions are taken at intersection of back of abutment (Sta. 706+14.87 & Sta. 707+53.54) and ℄ I-80.
2. Dimensions are measured at Rt. ∠s to ℄ I-80.

MODEL: Default
FILE NAME: 0998310-62F94-022-EDKXS.dgn

BURNS McDONNELL

USER NAME =	DESIGNED - ECK	REVISED -	
	CHECKED - GEK	REVISED -	
PLOT SCALE =	DRAWN - ECK	REVISED -	
PLOT DATE =	CHECKED - SLM	REVISED -	

STATE OF ILLINOIS
DEPARTMENT OF TRANSPORTATION

DECK CROSS SECTION - EB
STRUCTURE NO. 099-8310

SHEET SB-22 OF SB-53 SHEETS

F.A.I. RTE.	SECTION	COUNTY	TOTAL SHEETS	SHEET NO.
80	2017-057F	WILL	1342	798
		CONTRACT NO. 62F94		
	ILLINOIS	FED. AID PROJECT		

10/27/2025 4:59:12 PM

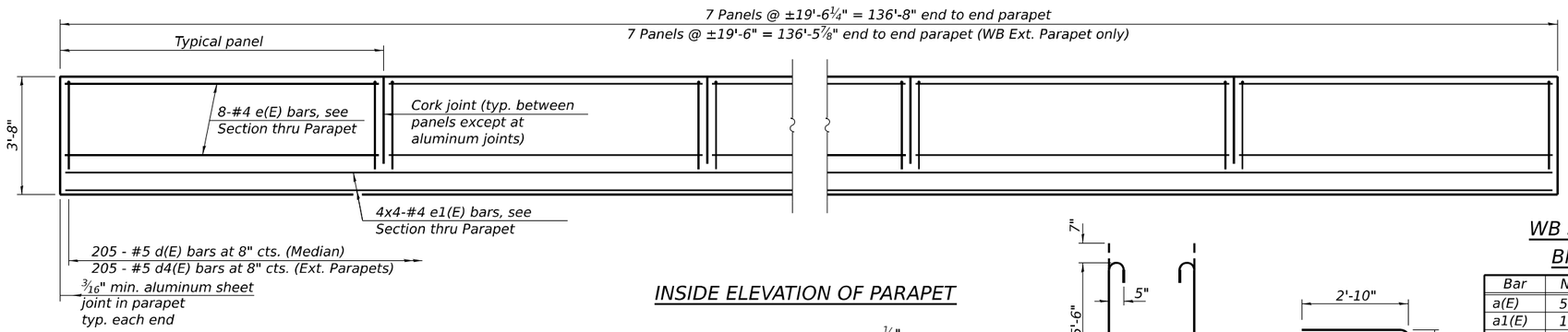

INSIDE ELEVATION OF PARAPET

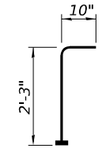

BAR v100(E)

(Headed. 312-#5 Bar Terminators)

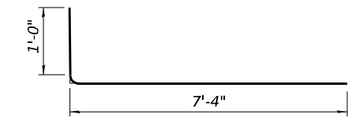

BAR a(E)

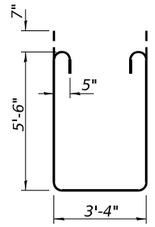

BAR s11(E)

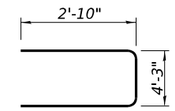

BAR s10(E)

MINIMUM BAR LAP

#4 bar = 2'-5"
#5 bar = 3'-6"
#6 bar = 4'-0"

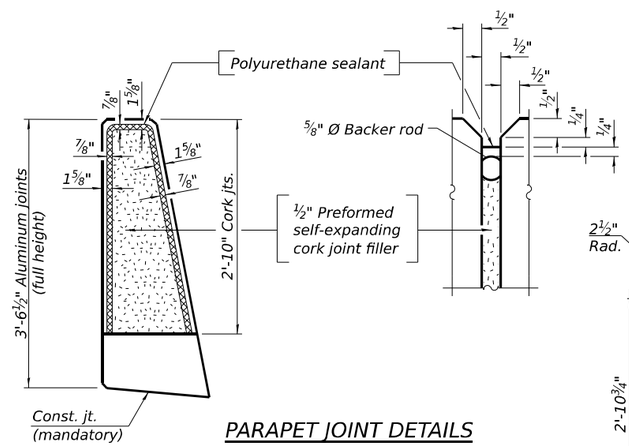

PARAPET JOINT DETAILS

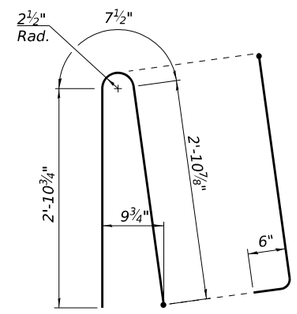

BAR d4(E)

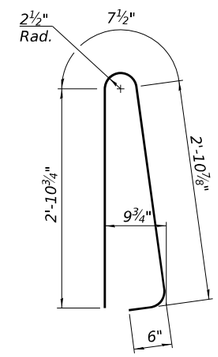

BAR d(E)

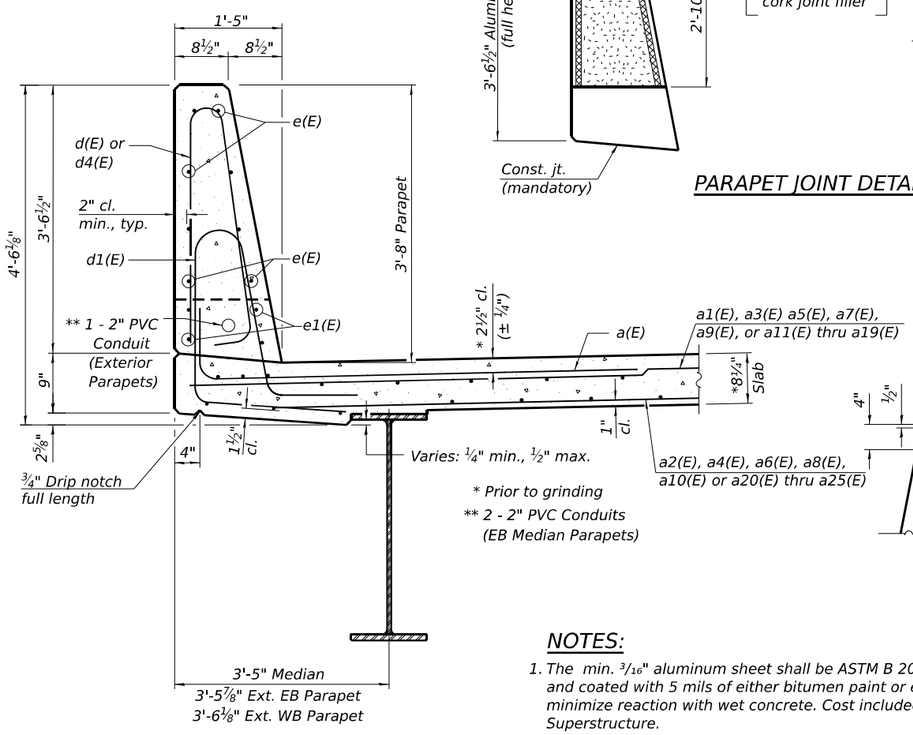

SECTION THRU PARAPET

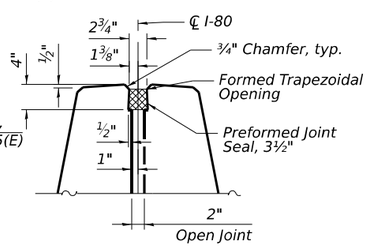

DETAIL A

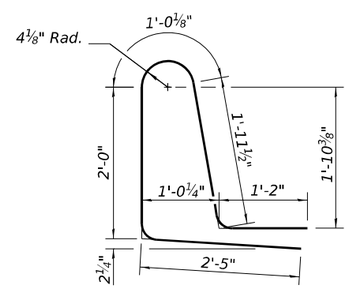

BAR d1(E)

NOTES:

1. The min. 3/16" aluminum sheet shall be ASTM B 209 alloy 3003-H14 and coated with 5 mils of either bitumen paint or epoxy paint to minimize reaction with wet concrete. Cost included with Concrete Superstructure.
2. The polyurethane sealant shall be according to Article 1050.04 of the Std. Spec. and the color shall be gray.
3. Bar terminators paid for separately. See Total Bill of Material.

WB SUPERSTRUCTURE BILL OF MATERIAL

Bar	No.	Size	Length	Shape
a(E)	594	#6	8'-4"	
a1(E)	144	#5	43'-11"	
a2(E)	132	#5	30'-5"	
a3(E)	144	#5	42'-9"	
a4(E)	132	#5	29'-8"	
a5(E)	144	#5	41'-7"	
a6(E)	132	#5	28'-11"	
a7(E)	144	#5	40'-5"	
a8(E)	132	#5	28'-2"	
a11(E)	2	#5	10'-0"	
a12(E)	2	#5	18'-6"	
a13(E)	2	#5	26'-11"	
a14(E)	2	#5	35'-5"	
a15(E)	2	#5	43'-11"	
a16(E)	4	#5	28'-1"	
a17(E)	4	#5	32'-4"	
a18(E)	4	#5	36'-7"	
a19(E)	2	#5	40'-8"	
a20(E)	2	#5	7'-2"	
a21(E)	2	#5	21'-1"	
a22(E)	2	#5	35'-0"	
a23(E)	2	#5	48'-11"	
a24(E)	4	#5	33'-2"	
a25(E)	2	#5	40'-1"	
a26(E)	4	#5	44'-0"	
a27(E)	4	#5	39'-5"	
b(E)	264	#5	47'-10"	
b1(E)	304	#5	36'-9"	
d(E)	205	#5	7'-0"	
d1(E)	410	#5	8'-7"	
d2(E)	3	#6	5'-3"	
d3(E)	6	#6	8'-11"	
d4(E)	205	#5	7'-0"	
e(E)	112	#4	19'-2"	
e1(E)	32	#4	35'-11"	
m10(E)	30	#6	7'-6"	
m11(E)	40	#6	7'-3"	
m12(E)	20	#6	3'-1"	
m13(E)	12	#6	39'-8"	
m14(E)	12	#6	44'-3"	
m15(E)	30	#6	5'-11"	
s10(E)	140	#5	9'-11"	
s11(E)	140	#5	15'-6"	
v100(E)	160	#5	3'-1"	
Reinforcement Bars, Epoxy Coated		Pound	91,140	
Concrete Superstructure		Cu. Yd.	441.0	
Protective Coat		Sq. Yd.	1,304	
Bridge Deck Grooving (Longitudinal)		Sq. Yd.	790	
Diamond Grinding (Bridge Section)		Sq. Yd.	1,108	

EB SUPERSTRUCTURE BILL OF MATERIAL

Bar	No.	Size	Length	Shape
a(E)	594	#6	8'-4"	
a9(E)	578	#5	39'-5"	
a10(E)	531	#5	27'-5"	
a11(E)	2	#5	10'-0"	
a12(E)	2	#5	18'-6"	
a13(E)	2	#5	26'-11"	
a14(E)	2	#5	35'-5"	
a15(E)	2	#5	43'-11"	
a16(E)	4	#5	28'-1"	
a17(E)	4	#5	32'-4"	
a18(E)	4	#5	36'-7"	
a20(E)	2	#5	7'-2"	
a21(E)	2	#5	21'-1"	
a22(E)	2	#5	35'-0"	
a23(E)	2	#5	48'-11"	
a24(E)	4	#5	33'-2"	
a27(E)	8	#5	39'-5"	
b(E)	237	#5	47'-10"	
b1(E)	276	#5	36'-9"	
d(E)	205	#5	7'-0"	
d1(E)	410	#5	8'-7"	
d2(E)	3	#6	5'-3"	
d3(E)	6	#6	8'-11"	
d4(E)	205	#5	7'-0"	
e(E)	112	#4	19'-2"	
e1(E)	32	#4	35'-11"	
m11(E)	90	#6	7'-3"	
m12(E)	20	#6	3'-1"	
m13(E)	24	#6	39'-8"	
s10(E)	138	#5	9'-11"	
s11(E)	138	#5	15'-6"	
v100(E)	152	#5	3'-1"	
Reinforcement Bars, Epoxy Coated		Pound	85,800	
Concrete Superstructure		Cu. Yd.	419.0	
Protective Coat		Sq. Yd.	1,240	
Bridge Deck Grooving (Longitudinal)		Sq. Yd.	790	
Diamond Grinding (Bridge Section)		Sq. Yd.	1,044	
Preformed Joint Seal, 3½"		Foot	137	

Bars indicated thus 1 x 2-#4 etc. indicates 1 line of bars with 2 lengths per line.

MODEL: Default
FILE NAME: 0998310-62F94-023-SUPD.dgn

BURNS McDONNELL

USER NAME =	DESIGNED - ECK	REVISED -	
	CHECKED - GEK	REVISED -	
PLOT SCALE =	DRAWN - ECK	REVISED -	
PLOT DATE =	CHECKED - SLM	REVISED -	

STATE OF ILLINOIS
DEPARTMENT OF TRANSPORTATION

SUPERSTRUCTURE DETAILS I
STRUCTURE NO. 099-8310

SHEET SB-23 OF SB-53 SHEETS

F.A.I. RTE.	SECTION	COUNTY	TOTAL SHEETS	SHEET NO.
80	2017-057F	WILL	1342	799
		CONTRACT NO. 62F94		
		ILLINOIS	FED. AID PROJECT	

10/27/2025 4:59:15 PM

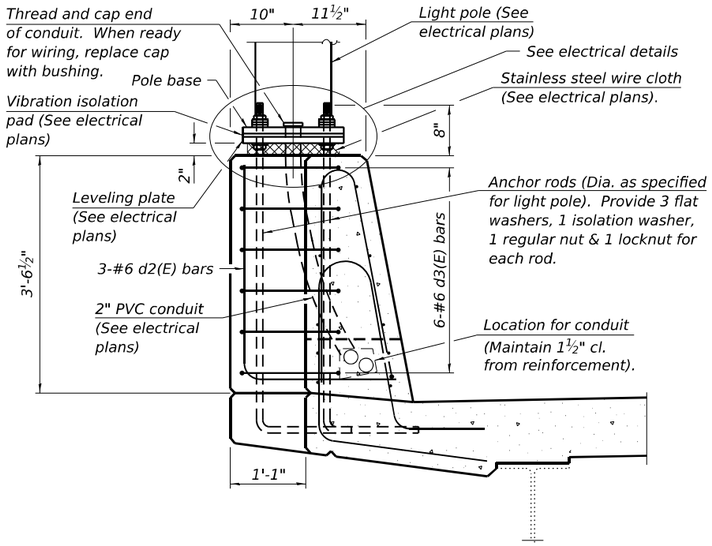

SECTION A-A

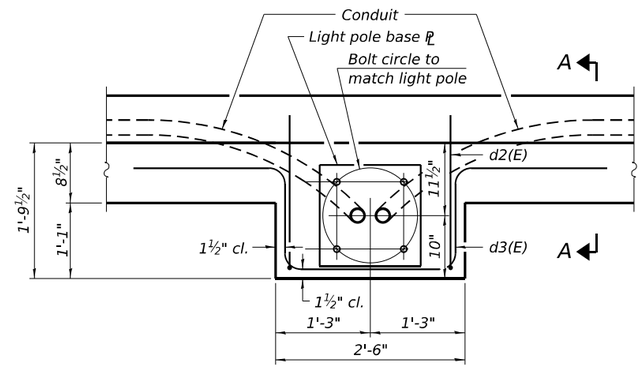

PLAN

Note:
Cost of anchor rods is included with Concrete Superstructure.

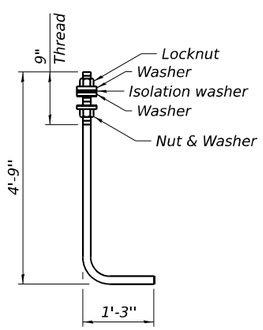

ANCHOR ROD

Diameter as specified for light poles. (ASTM F 1554 Grade 105) Full length hot dipped galvanized.

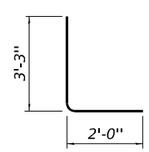

BAR d2(E)

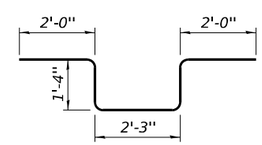

BAR d3(E)

MODEL: Default
FILE NAME: 0998310-62F94-024-SUPD2.dgn

BURNS McDONNELL	USER NAME =	DESIGNED - ECK	REVISED -	STATE OF ILLINOIS DEPARTMENT OF TRANSPORTATION	SUPERSTRUCTURE DETAILS II STRUCTURE NO. 099-8310	F.A.I. RTE.	SECTION	COUNTY	TOTAL SHEETS	SHEET NO.
		CHECKED - GEK	REVISED -			80	2017-057F	WILL	1342	800
	PLOT SCALE =	DRAWN - ECK	REVISED -					CONTRACT NO. 62F94		
	PLOT DATE =	CHECKED - SLM	REVISED -		SHEET SB-24 OF SB-53 SHEETS		ILLINOIS	FED. AID PROJECT		

10/27/2025 4:59:18 PM