01-16-2026 LETTING ITEM 135

F.A.P RTE.	SECTION	COUNTY	TOTAL SHEETS	SHEET NO.
322	3VB-3	JACKSON	124	1
	ILLINOIS	CONTRACT NO. 78937		

D-99-031-22

FOR INDEX OF SHEETS, SEE SHEET NO. 3

FOR SUMMARY OF QUANTITIES, SEE SHEET NO. 4-11

STATE OF ILLINOIS
DEPARTMENT OF TRANSPORTATION

PROPOSED HIGHWAY PLANS

FAP ROUTE 322 (US 51)
SECTION 3VB-3
PROJECT NHPP-W160(145)
BRIDGE REPLACEMENT
JACKSON COUNTY

C-99-043-22

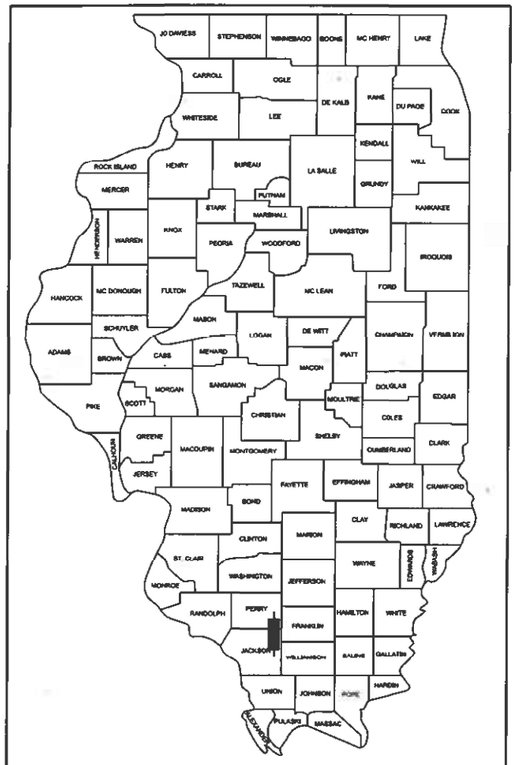

LOCATION OF SECTION INDICATED THUS: -

TRAFFIC DATA

2025 ADT = 5,620
2045 ADT = 6,860
PV% = 92.27%
SU% = 3.13%
MU% = 4.59%

TOWNSHIPS

DESOTO

COORDINATE SYSTEM : ESPG: 102671 NAD 1983 STATE PLANE ILLINOIS EAST FIPS 1201

POSTED SPEED : 55 MPH

BRIDGE REPLACEMENT OVER C.N.I.C. R.R.
EXISTING SN 039-0052
PROPOSED SN 039-0084
STA. 430+51.12 (US 51) = MILE POST 0299.430 (C.N.I.C. R.R.)
THREE SPAN AT 177'-0" BACK TO BACK ABUTMENTS
29°37'40" SKEW TO C.N.IC. R.R.

BEGIN IMPROVEMENTS STA. 424+96.19

STATION EQUATION: STA. 424+59.77 BK = STA. 424+61.44 AH

END IMPROVEMENTS STA. 436+12.03

R1W

T8S

SCALE: 1" = 3000'

GROSS LENGTH = 1150.59 FT. = 0.218 MILE
NET LENGTH = 863.15 FT. = 0.163 MILE

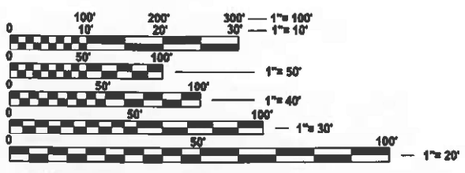

FULL SIZE PLANS HAVE BEEN PREPARED USING STANDARD ENGINEERING SCALES. REDUCED SIZED PLANS WILL NOT CONFORM TO STANDARD SCALES. IN MAKING MEASUREMENTS ON REDUCED PLANS, THE ABOVE SCALES MAY BE USED.

J.U.L.I.E.
JOINT UTILITY LOCATION INFORMATION FOR EXCAVATION
1-800-892-0123
OR 811

LICENSED PROFESSIONAL ENGINEER TIMOTHY B. PADGETT 062-049162 STATE OF ILLINOIS

PROJECT MANAGER: EHREN KIRBY
PROJECT ENGINEER: TWM

CONTRACT NO. 78937

TIMOTHY B. PADGETT, P.E. EXPIRATION DATE
LICENSE NO. 062-049162 11-30-2025
SEAL COVERS SHEETS: 1-59, 61-88

PLANS PREPARED BY:

TWM ENGINEERING GEOSPATIAL SERVICES
4940 Old Collinsville Road
Swansea, Illinois 62226
Tel: 618.624.4488
www.twm-inc.com
Illinois Professional Design Firm No. 184-001220
License Expires: 4/30/2027
ILLINOIS - MISSOURI - TENNESSEE

STATE OF ILLINOIS
DEPARTMENT OF TRANSPORTATION

SUBMITTED August 29 20 25
Lora S. Benson
REGION FIVE ENGINEER

December 5 20 25
ENGINEER OF DESIGN AND ENVIRONMENT

December 5 20 25
DIRECTOR OF HIGHWAYS PROJECT IMPLEMENTATION

PRINTED BY THE AUTHORITY OF THE STATE OF ILLINOIS

Prepared By: Susan Poe
DISTRICT STUDIES & PLANS ENGINEER

Examined By: Nancy Steil PE
DISTRICT LAND ACQUISITION ENGINEER

Examined By: Con Nelson
DISTRICT PROGRAM DEVELOPMENT ENGINEER

Examined By: R. Cates
DISTRICT OPERATIONS ENGINEER

Examined By:
DISTRICT PROJECT IMPLEMENTATION ENGINEER

Examined By: Bussville
DISTRICT CONSTRUCTION ENGINEER

Examined By: Aaron Wang
DISTRICT MATERIALS ENGINEER

MODEL: Default
FILE NAME: P:\2022\2201970A - US 51 over ICRR Bridge Replacement (Phase III) CADD - DWGs\7 TranSAD Sheets\0978937-sm-Signature.dgn

TWM, INC.
WWW.TWM-INC.COM
ENGINEERING & GEOSPATIAL SERVICES
IL DESIGN FIRM LICENSE NO: 184-001220

USER NAME = bbellhartz	DESIGNED - TBP	REVISED -	
	DRAWN - BAB	REVISED -	
PLOT SCALE = 2.000 ' / in.	CHECKED - SJK	REVISED -	
PLOT DATE = 7/25/2025	DATE - 5/2025	REVISED -	

STATE OF ILLINOIS
DEPARTMENT OF TRANSPORTATION

SIGNATURE SHEET

SCALE: | SHEET 1 OF 1 SHEETS | STA. TO STA.

F.A.P. RTE.	SECTION	COUNTY	TOTAL SHEETS	SHEET NO.
322	3V8-3	JACKSON	125	2

CONTRACT NO. 78937

ILLINOIS | FED. AID PROJECT

GENERAL NOTES

1. FACTORS USED FOR ESTIMATING PLAN QUANTITIES ARE AS FOLLOWS AND SHALL NOT BE USED FOR THE BASIS OF FINAL QUANTITIES:

   ALL HOT MIX ASPHALT: 2.016 TONS/CU. YD.
   ALL AGGREGATE: 2.05 TONS/CU. YD.
   RIPRAP: 1.50 TONS/ CU. YD.

2. THE QUANTITY OF SHORT TERM PAVEMENT MARKING SHOWN IN THE PLANS IS BASED ON ONE APPLICATION EACH AFTER REMOVAL OF STAGE 2 AND HMA SURFACE COURSE.

3. LONGITUDINAL JOINT SEALANT SHALL BE PLACED UNDER THE HMA SURFACE COURSE.

4. EDGE LINE PAVEMENT MARKING SHALL BE REMOVED IF A 10 FT LANE WIDTH CANNOT BE MAINTAINED. TEMPORARY EDGE LINES SHALL BE INSTALLED WHEN THE EDGE LINES ARE REMOVED.

5. REVISE STANDARD SPECIFICATIONS ARTICLE 107.12, PARAGRAPH 5, LAST SENTENCE TO READ: "ALL OTHER RAILROAD FLAGGER COSTS WILL BE INCURRED BY THE DEPARTMENT ACCORDING TO ARTICLE 109.05."

6. NO PINNING OF TEMPORARY CONCRETE BARRIER ALLOWED IN THE NEW BRIDGE DECK.

COMMITMENTS

COMMITMENTS FOR THIS PROJECT ARE AS FOLLOWS:

1. IDOT BUREAU OF DESIGN AND ENVIRONMENT MUST BE CONTACTED WHEN THE PRE-CONSTRUCTION CONFERENCE IS SCHEDULED SO THAT THEY CAN ATTEND. THE INDIVIDUAL TO CONTACT IS BRADLEY DAUGHERTY AT: (217) 782-7727; (BRADLEY.M.DAUGHERTY@ILLINOIS.GOV) AND THE NATURAL RESOURCES UNIT INBOX (DOT.BDE.NATURALRESOURCES-ESR@ILLINOIS.GOV).

2. ALONG THE FAULKNER FRANKE ILLINOIS NATURE PRESERVE PROPERTY LINE (STA. 432+08.47 LT TO STA. 436+12.70 LT) PLACE HIGH VISIBILITY TEMPORARY FENCING TO AVOID IMPACTS AND RESTRICT CONTRACTOR ACCESS TO THE AREA.

3. TREES GREATER THAN OR EQUAL TO 3" IN DIAMETER AT BREAST HEIGHT SHALL NOT BE CLEARED FROM APRIL 1ST AND SEPTEMBER 30TH OF ANY GIVEN YEAR.

INDEX OF SHEETS

HIGHWAY STANDARDS

000001-09	STANDARD SYMBOLS, ABBREVIATIONS AND PATTERNS
001001-02	AREAS OF REINFORCEMENT BARS
001006	DECIMAL OF AN INCH AND OF A FOOT
280001-07	TEMPORARY EROSION CONTROL SYSTEMS
420001-11	PAVEMENT JOINTS
420701-03	PAVEMENT WELDED WIRE REINFORCMENT
482001-02	HMA SHOULDER ADJACENT TO FLEXIBLE PAVEMENT
515001-04	NAME PLATES FOR BRIDGES
630001-13	STEEL PLATE BEAM GUARDRAIL
630201-07	PCC/ HMA STABILIZATION AT STEEL PLATE BEAM GUARDRAIL
630301-09	SHOULDER WIDENING FOR TYPE 1 (SPECIAL) GUARDRAIL TERMINALS
631031-18	TRAFFIC BARRIER TERMINAL, TYPE 6
642006-01	SHOULDER RUMBLE STRIPS, 8 IN.
701001-02	OFF-ROAD OPERATIONS, 2L, 2W, MORE THAN 15' AWAY
701006-05	OFF-ROAD OPERATIONS, 2L, 2W, 15' TO 24" FROM PAVEMENT EDGE
701201-05	LANE CLOSURE, 2L 2W, DAY ONLY, FOR SPEEDS ≥ 45 MPH
701306-04	LANE CLOSURE, 2L, 2W, SLOW MOVING OPERATIONS DAY ONLY, FOR SPEEDS ≥45 MPH
701311-03	LANE CLOSURE, 2L, 2W, MOVING OPERATIONS - DAY ONLY
701321-19	LANE CLOSURE, 2L, 2W, BRIDGE REPAIR WITH BARRIER
701326-04	LANE CLOSURE, 2L, 2W PAVEMENT WIDENING FOR SPEEDS ≥ 45 MPH
701901-11	TRAFFIC CONTROL DEVICES
704001-08	TEMPORARY CONCRETE BARRIER
720001-01	SIGN PANEL MOUNTING DETAILS
720006-04	SIGN PANEL ERECTION DETAILS
725001-01	OBJECT AND TERMINAL MARKERS
780001-05	TYPICAL PAVEMENT MARKINGS
782006-01	GUARDRAIL AND BARRIER WALL REFLECTOR MOUNTING DETAILS
862001-01	UNINTERRUPTABLE POWER SUPPLY (UPS)
BLR 21-9	TYPICAL APPLICATION OF TRAFFIC CONTROL DEVICES FOR CONSTRUCTION ON RURAL LOCAL HIGHWAYS

MIX REQUIREMENTS

LOCATIONS	HOT-MIX ASPHALT SURFACE COURSE	HOT-MIX ASPHALT BINDER COURSE HOT-MIX ASPHALT SHOULDERS 1 1/4"	HOT-MIX ASPHALT BINDER COURSE (VARIABLE DEPTH) HOT-MIX ASPHALT SHOULDERS (VARIABLE DEPTH) HOT-MIX ASPHALT BASE COURSE 8 3/4"	HOT-MIX ASPHALT SHOULDERS 1 1/2" HOT-MIX ASPHALT SHOULDERS 6"
MIXTURE USE(S):	HOT-MIX ASPHALT SURFACE COURSE, MIX D, N70	HOT-MIX ASPHALT BINDER COURSE, IL-9.5FG, N70	HOT-MIX ASPHALT BINDER COURSE, IL-19.0, N70	HOT-MIX ASPHALT SURFACE COURSE, MIX C, N30
PG:	PG64-22	PG64-22	PG64-22	PG64-22
DESIGN AIR VOIDS:	4.0% 70 GYRATION DESIGN	4.0% 70 GYRATION DESIGN	4.0% 70 GYRATION DESIGN	4.0% 30 GYRATION DESIGN
MIXTURE COMPOSITION: (GRADATION MIXTURE)	IL-9.5mm	IL-9.5 FINE GRADED	IL-19.0mm	IL-9.5L
FRICTION AGGREGATE:	MIX D	NONE	NONE	NONE
MIXTURE WEIGHT:	112 LBS/SQ YD/IN	112 LBS/SQ YD/IN	112 LBS/SQ YD/IN	112 LBS/SQ YD/IN
QUALITY MANAGEMENT PROGRAM:	QC/QA	QC/QA	QC/QA	QC/QA
SUBLOT SIZE:	3000 TON	3000 TON	3000 TON	3000 TON
MATERIAL TRANSFER DEVICE	NO	NO	NO	NO

LIFT THICKNESSES

8 3/4" HMA BASE COURSE
- 2 1/4" TOP LIFT
- 2 1/2" MIDDLE LIFT
- 4" BOTTOM LIFT

HMA BINDER, VARIABLE DEPTH AND HMA SHOULDERS, VARIABLE DEPTH
- MAX LIFT = 4"

REV - MS

CODE NO.	PAY ITEM	UNIT	TOTAL QUANTITY	CONSTRUCTION CODE JACKSON 80% FED / 20% STATE BRIDGE REPLACEMENT 0010 RURAL
20100500	TREE REMOVAL, ACRES	ACRE	1.5	1.5
20200100	EARTH EXCAVATION	CU YD	209	209
20400100	BORROW EXCAVATION	CU YD	10879	10879
25000210	SEEDING, CLASS 2A	ACRE	2.75	2.75
25000350	SEEDING, CLASS 7	ACRE	2.75	2.75
25000400	NITROGEN FERTILIZER NUTRIENT	POUND	248	248
25000500	PHOSPHORUS FERTILIZER NUTRIENT	POUND	248	248
25000600	POTASSIUM FERTILIZER NUTRIENT	POUND	248	248
25000700	AGRICULTURAL GROUND LIMESTONE	TON	6	6
25100630	EROSION CONTROL BLANKET	SQ YD	13474	13474
28000250	TEMPORARY EROSION CONTROL SEEDING	POUND	557	557
28000400	PERIMETER EROSION BARRIER	FOOT	2947	2947
28100107	STONE RIPRAP, CLASS A4	SQ YD	256	256
28200200	FILTER FABRIC	SQ YD	256	256

CONSTRUCTION CODE
JACKSON
80% FED / 20% STATE
BRIDGE REPLACEMENT
0010
RURAL

CODE NO.	PAY ITEM	UNIT	TOTAL QUANTITY	
31101000	SUBBASE GRANULAR MATERIAL, TYPE B	TON	45	45
31101900	SUBBASE GRANULAR MATERIAL, TYPE C	TON	139	139
35300305	PORTLAND CEMENT CONCRETE BASE COURSE 8 1/4"	SQ YD	1290	1290
35501319	HOT-MIX ASPHALT BASE COURSE, 8 3/4"	SQ YD	782	782
40600290	BITUMINOUS MATERIALS (TACK COAT)	POUND	3001	3001
40600370	LONGITUDINAL JOINT SEALANT	FOOT	828	828
40600982	HOT-MIX ASPHALT SURFACE REMOVAL - BUTT JOINT	SQ YD	56	56
40600985	PORTLAND CEMENT CONCRETE SURFACE REMOVAL - BUTT JOINT	SQ YD	20	20
40600990	TEMPORARY RAMP	SQ YD	53	53
40602970	HOT-MIX ASPHALT BINDER COURSE, IL-9.5FG, N70	TON	57	57
40603085	HOT-MIX ASPHALT BINDER COURSE, IL-19.0, N70	TON	1325	1325
40604062	HOT-MIX ASPHALT SURFACE COURSE, IL-9.5, MIX "D", N70	TON	187	187
42000060	WELDED WIRE REINFORCEMENT	SQ YD	143	143
44000100	PAVEMENT REMOVAL	SQ YD	252	252

CONSTRUCTION CODE
JACKSON
80% FED / 20% STATE
BRIDGE REPLACEMENT
0010
RURAL

CODE NO.	PAY ITEM	UNIT	TOTAL QUANTITY	
44000400	GUTTER REMOVAL	FOOT	1562	1562
44000500	COMBINATION CURB AND GUTTER REMOVAL	FOOT	18	18
44004250	PAVED SHOULDER REMOVAL	SQ YD	1129	1129
48102100	AGGREGATE WEDGE SHOULDER, TYPE B	TON	28	28
48203002	HOT-MIX ASPHALT SHOULDERS, 1 1/4"	SQ YD	201	201
48203003	HOT-MIX ASPHALT SHOULDERS, 1 1/2"	SQ YD	1473	1473
48203021	HOT-MIX ASPHALT SHOULDERS, 6"	SQ YD	401	401
48203100	HOT-MIX ASPHALT SHOULDERS	TON	310	310
50100200	REMOVAL OF EXISTING STRUCTURES	L SUM	1	1
50200100	STRUCTURE EXCAVATION	CU YD	456	456
50300225	CONCRETE STRUCTURES	CU YD	250.2	250.2
50300255	CONCRETE SUPERSTRUCTURE	CU YD	289.1	289.1
50300260	BRIDGE DECK GROOVING	SQ YD	991	991
50300300	PROTECTIVE COAT	SQ YD	1235	1235

CODE NO.	PAY ITEM	UNIT	TOTAL QUANTITY	CONSTRUCTION CODE JACKSON 80% FED / 20% STATE BRIDGE REPLACEMENT 0010 RURAL
50301350	CONCRETE SUPERSTRUCTURE (APPROACH SLAB)	CU YD	116.8	116.8
50500105	FURNISHING AND ERECTING STRUCTURAL STEEL	L SUM	1	1
50500505	STUD SHEAR CONNECTORS	EACH	5256	5256
50800105	REINFORCEMENT BARS	POUND	27040	27040
50800205	REINFORCEMENT BARS, EPOXY COATED	POUND	154310	154310
50800515	BAR SPLICERS	EACH	941	941
50800530	MECHANICAL SPLICERS	EACH	332	332
51100100	SLOPE WALL 4 INCH	SQ YD	618	618
51201610	FURNISHING STEEL PILES HP12X63	FOOT	395	395
51202305	DRIVING PILES	FOOT	395	395
51203610	TEST PILE STEEL HP12X63	EACH	2	2
51204650	PILE SHOES	EACH	12	12
51500100	NAME PLATES	EACH	1	1
* 51603000	DRILLED SHAFT IN SOIL	CU YD	59.5	59.5

* SPECIALTY ITEM

	CODE NO.	PAY ITEM	UNIT	TOTAL QUANTITY	CONSTRUCTION CODE JACKSON 80% FED / 20% STATE BRIDGE REPLACEMENT 0010 RURAL
*	51604000	DRILLED SHAFT IN ROCK	CU YD	45.3	45.3
	52100510	ANCHOR BOLTS, 3/4"	EACH	24	24
	52100520	ANCHOR BOLTS, 1"	EACH	24	24
	52200020	TEMPORARY SOIL RETENTION SYSTEM	SQ FT	603	603
	58600101	GRANULAR BACKFILL FOR STRUCTURES	CU YD	250	250
	60146304	PIPE UNDERDRAINS FOR STRUCTURES 4"	FOOT	165	165
	60500060	REMOVING INLETS	EACH	2	2
*	63000001	STEEL PLATE BEAM GUARDRAIL, TYPE A, 6 FOOT POSTS	FOOT	475	475
*	63100085	TRAFFIC BARRIER TERMINAL, TYPE 6	EACH	4	4
*	63100167	TRAFFIC BARRIER TERMINAL, TYPE 1 (SPECIAL) TANGENT	EACH	4	4
	63200310	GUARDRAIL REMOVAL	FOOT	864	864
	64200108	SHOULDER RUMBLE STRIPS, 8 INCH	FOOT	2177	2177
	66600105	FURNISHING AND ERECTING RIGHT OF WAY MARKERS	EACH	4	4
	67000400	ENGINEER'S FIELD OFFICE, TYPE A	CAL MO	14	14

* SPECIALTY ITEM

REV - MS

CODE NO.	PAY ITEM	UNIT	TOTAL QUANTITY	CONSTRUCTION CODE JACKSON 80% FED / 20% STATE BRIDGE REPLACEMENT 0010 RURAL
67100100	MOBILIZATION	L SUM	1	1
70100405	TRAFFIC CONTROL AND PROTECTION, STANDARD 701321	EACH	1	1
70100450	TRAFFIC CONTROL AND PROTECTION, STANDARD 701201	L SUM	1	1
70100460	TRAFFIC CONTROL AND PROTECTION, STANDARD 701306	L SUM	1	1
70100500	TRAFFIC CONTROL AND PROTECTION, STANDARD 701326	L SUM	1	1
70103815	TRAFFIC CONTROL SURVEILLANCE	CAL DA	5	5
70106500	TEMPORARY BRIDGE TRAFFIC SIGNALS	EACH	1	1
70106700	TEMPORARY RUMBLE STRIPS	EACH	6	6
70107005	PAVEMENT MARKING BLACKOUT TAPE, 5"	FOOT	588	588
70107025	CHANGEABLE MESSAGE SIGN	CAL DA	28	28
70300100	SHORT TERM PAVEMENT MARKING	FOOT	312	312
70300150	SHORT TERM PAVEMENT MARKING REMOVAL	SQ FT	351	351
70300221	TEMPORARY PAVEMENT MARKING - LINE 4"- PAINT	FOOT	4951	4951
70400100	TEMPORARY CONCRETE BARRIER	FOOT	1488	1488

CONSTRUCTION CODE
JACKSON
80% FED / 20% STATE
BRIDGE REPLACEMENT
0010
RURAL

	CODE NO.	PAY ITEM	UNIT	TOTAL QUANTITY	
	70400125	PINNING TEMPORARY CONCRETE BARRIER	EACH	339	339
	70400200	RELOCATE TEMPORARY CONCRETE BARRIER	FOOT	1400	1400
	70600251	IMPACT ATTENUATORS, TEMPORARY (NON- REDIRECTIVE, NARROW), TEST LEVEL 3	EACH	2	2
	70600352	IMPACT ATTENUATORS, RELOCATE (NON- REDIRECTIVE,NARROW), TEST LEVEL 3	EACH	2	2
*	72501000	TERMINAL MARKER - DIRECT APPLIED	EACH	4	4
*	73000100	WOOD SIGN SUPPORT	FOOT	34	34
*	78000200	THERMOPLASTIC PAVEMENT MARKING - LINE 4"	FOOT	4951	4951
*	78200005	GUARDRAIL REFLECTORS, TYPE A	EACH	18	18
*	78200011	BARRIER WALL REFLECTORS, TYPE C	EACH	193	193
	78300200	RAISED REFLECTIVE PAVEMENT MARKER REMOVAL	EACH	4	4
	78300201	PAVEMENT MARKING REMOVAL - GRINDING	SQ FT	1650	1650
*	86200300	UNINTERRUPTABLE POWER SUPPLY, EXTENDED	EACH	1	1
	X0320051	CROSSHOLE SONIC LOGGING ACCESS DUCTS	FOOT	340	340
	X0320052	CROSSHOLE SONIC LOGGING TESTING	EACH	2	2

* SPECIALTY ITEM

CONSTRUCTION CODE
JACKSON
80% FED / 20% STATE
BRIDGE REPLACEMENT
0010
RURAL

CODE NO.	PAY ITEM	UNIT	TOTAL QUANTITY	
X2011001	HIGH VISIBILITY TEMPORARY FENCING	FOOT	397	397
X4201410	BRIDGE APPROACH PAVEMENT CONNECTOR (SPECIAL)	SQ YD	238	238
X4400100	PORTLAND CEMENT CONCRETE SURFACE REMOVAL (VARIABLE DEPTH)	SQ YD	221	221
X4401198	HOT-MIX ASPHALT SURFACE REMOVAL, VARIABLE DEPTH	SQ YD	606	606
X4406210	PARTIAL DEPTH REMOVAL, TYPE II, VARIABLE DEPTH	SQ YD	100	100
X5080530	BAR TERMINATORS	EACH	752	752
X6010003	PIPE DRAIN REMOVAL	FOOT	151	151
X6050065	REMOVING INLETS (SPECIAL)	EACH	2	2
X6050310	FILLING INLETS (SPECIAL)	EACH	2	2
X7011800	TRAFFIC CONTROL AND PROTECTION, STANDARD BLR 21	L SUM	1	1
Z0001900	ASBESTOS BEARING PAD REMOVAL	EACH	28	28
Z0013798	CONSTRUCTION LAYOUT	L SUM	1	1
Z0048665	RAILROAD PROTECTIVE LIABILITY INSURANCE	L SUM	1	1
Ø Z0076600	TRAINEES	HOUR	1000	1000
Z0073400	TEMPORARY SUPPORT SYSTEM	EACH	2	2
Ø Z0076604	TRAINEES TRAINING PROGRAM GRADUATE	HOUR	1000	1000

Ø 0042

REV - MS

MODEL: Default
FILE NAME: P:\2022\20197A - US 51 over ICRR Bridge Replacement (Phase 1)\4 CADD - DWG\4.7 Train\CAD Sheets\0978937-sht-SQQ.dgn

TWM ENGINEERING GEOSPATIAL SERVICES
TWM, INC.
WWW.TWM-INC.COM
IL DESIGN FIRM LICENSE NO: 184-001220

USER NAME = bbillhartz	DESIGNED - TBP	REVISED -	
	DRAWN - BAB	REVISED -	
PLOT SCALE = 40.000 ' / in.	CHECKED - SJK	REVISED -	
PLOT DATE = 8/21/2025	DATE - 5/2025	REVISED -	

STATE OF ILLINOIS
DEPARTMENT OF TRANSPORTATION

SUMMARY OF QUANTITIES

SCALE: SHEET 8 OF 8 SHEETS STA. TO STA.

F.A.P. RTE.	SECTION	COUNTY	TOTAL SHEETS	SHEET NO.
322	3VB-3	JACKSON	124	11

CONTRACT NO. 78937

ILLINOIS FED. AID PROJECT

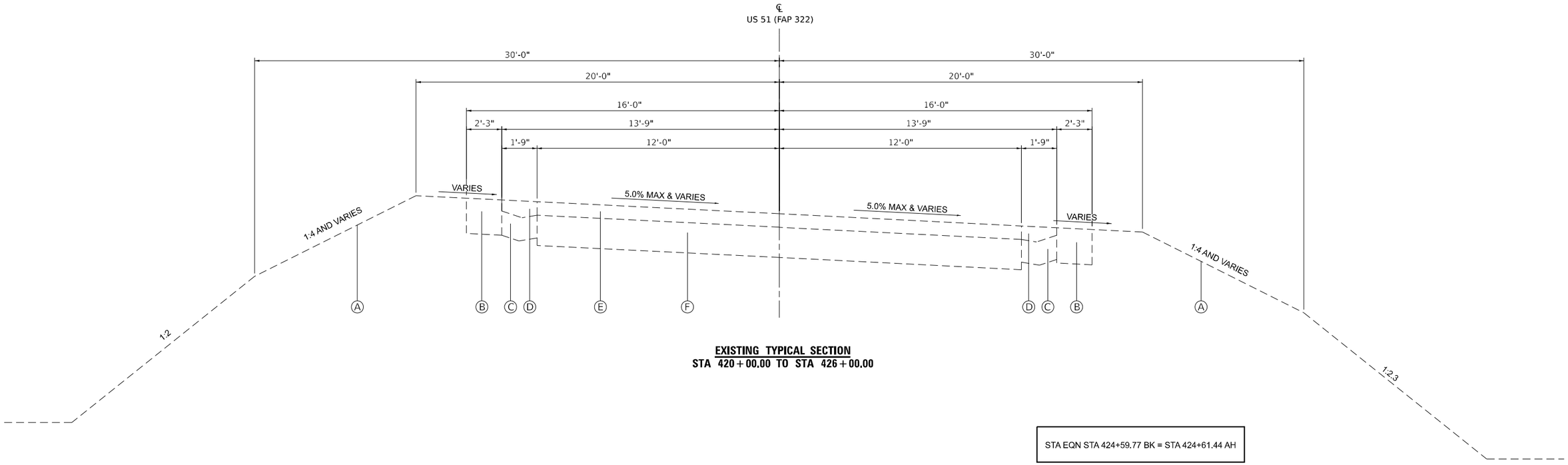

EXISTING TYPICAL SECTION
STA 420+00.00 TO STA 426+00.00

STA EQN STA 424+59.77 BK = STA 424+61.44 AH

TYPICAL SECTION LEGEND

- Ⓐ EX. EMBANKMENT
- Ⓑ EX. 8" HMA SHOULDER
- Ⓒ EX. CONCRETE GUTTER TYPE B
- Ⓓ EX. HMA SHOULDER
- Ⓔ EX. HMA PAVEMENT
- Ⓕ EX. PCC PAVEMENT
- Ⓖ EX. GUARDRAIL
- Ⓗ EX. GUARDRAIL

- ① PR. EMBANKMENT
- ② PR. HOT-MIX ASPHALT SHOULDERS, VARIABLE DEPTH (SEE CHART)
- ③ PR. HOT-MIX ASPHALT SHOULDERS, 1.5"
- ④ PR. HOT-MIX ASPHALT SHOULDERS, 1.25"
- ⑤ PR. HOT-MIX ASPHALT SURFACE COURSE, MIX D, N70, 1.5"
- ⑥ PR. HOT-MIX ASPHALT SHOULDERS, 6"
- ⑦ PR. PORTLAND CEMENT CONCRETE BASE COURSE, 8.25"
- ⑧ PR. HOT-MIX ASPHALT BINDER COURSE, IL-19.0, N70, VARIABLE DEPTH (SEE CHART)
- ⑨ PR. HOT-MIX ASPHALT BINDER COURSE, IL-9.5FG, N70, 1.25"
- ⑩ PR. AGGREGATE WEDGE SHOULDER, TYPE B
- ⑪ PR. HOT-MIX ASPHALT BASE COURSE, 8.75"

- ⑫ PR. BITUMINOUS MATERIALS (TACK COAT)
- ⑬ PR. SUBBASE GRANULAR MATERIAL, TYPE C
- ⑭ RESERVED
- ⑮ PR. STEEL PLATE BEAM GUARDRAIL 6 FOOT POSTS
- ⑯ PR. THERMOPLASTIC PAVEMENT MARKING - 4"
- ⑰ PR. LONGITUDINAL JOINT SEALANT
- ⑱ PR. SHOULDER RUMBLE STRIPS, 8"

- PAVED SHOULDER REMOVAL
- HMA SURFACE REMOVAL, VARIABLE DEPTH
- GUTTER REMOVAL
- PCC SURFACE REMOVAL, VARIABLE DEPTH

MODEL: Default
FILE NAME: P:\2022\220197A - US 51 over ICRR Bridge Replacement (Phase 1)\4 CADD - DWG\4.7 Train\CAD Sheets\0978937-int-typical.dgn

TWM ENGINEERING GEOSPATIAL SERVICES	TWM, INC. WWW.TWM-INC.COM IL DESIGN FIRM LICENSE NO: 184-001220	USER NAME = bbillhartz	DESIGNED - TBP	REVISED -	STATE OF ILLINOIS DEPARTMENT OF TRANSPORTATION
			DRAWN - BAB	REVISED -	
		PLOT SCALE = 5.000 ' / in.	CHECKED - SJK	REVISED -	
		PLOT DATE = 8/21/2025	DATE - 5/2025	REVISED -	

EXISTING TYPICAL SECTIONS
US 51

SCALE: N.T.S. | SHEET 1 OF 4 SHEETS | STA. | TO STA.

F.A.P. RTE.	SECTION	COUNTY	TOTAL SHEETS	SHEET NO.
322	3VB-3	JACKSON	124	12

CONTRACT NO. 78937

ILLINOIS | FED. AID PROJECT

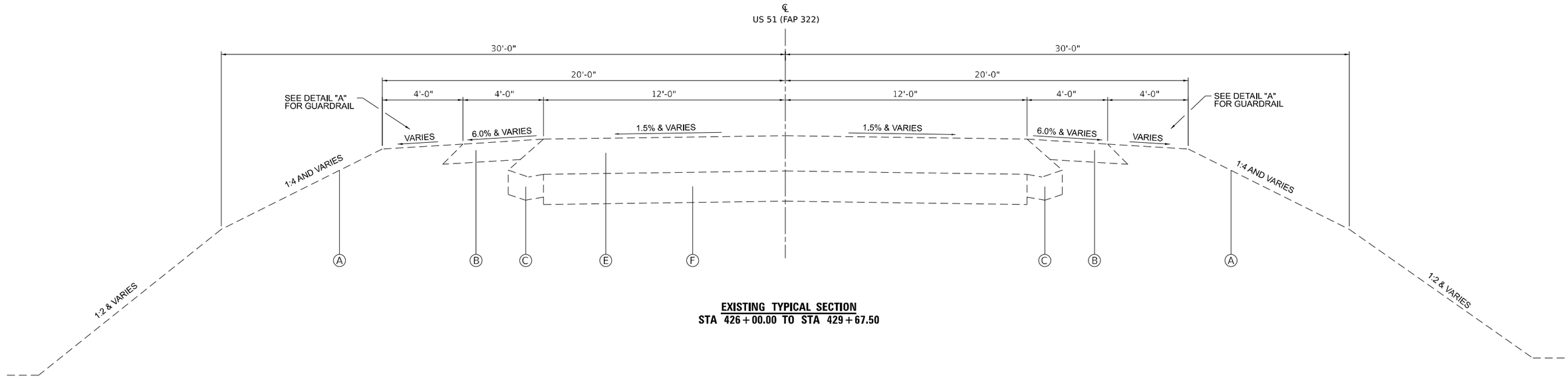

EXISTING TYPICAL SECTION
STA 426+00.00 TO STA 429+67.50

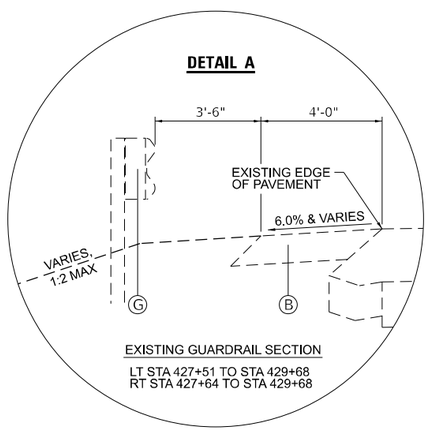

EXISTING GUARDRAIL SECTION
LT STA 427+51 TO STA 429+68
RT STA 427+64 TO STA 429+68

EXISTING BRIDGE
STA. 429+67.50 TO STA. 431+18.50

TYPICAL SECTION LEGEND

- Ⓐ EX. EMBANKMENT
- Ⓑ EX. 8" HMA SHOULDER
- Ⓒ EX. CONCRETE GUTTER TYPE B
- Ⓓ EX. HMA SHOULDER
- Ⓔ EX. HMA PAVEMENT
- Ⓕ EX. PCC PAVEMENT
- Ⓖ EX. GUARDRAIL
- Ⓗ EX. GUARDRAIL

- ① PR. EMBANKMENT
- ② PR. HOT-MIX ASPHALT SHOULDERS, VARIABLE DEPTH (SEE CHART)
- ③ PR. HOT-MIX ASPHALT SHOULDERS, 1.5"
- ④ PR. HOT-MIX ASPHALT SHOULDERS, 1.25"
- ⑤ PR. HOT-MIX ASPHALT SURFACE COURSE, MIX D, N70, 1.5"
- ⑥ PR. HOT-MIX ASPHALT SHOULDERS, 6"
- ⑦ PR. PORTLAND CEMENT CONCRETE BASE COURSE, 8.25"
- ⑧ PR. HOT-MIX ASPHALT BINDER COURSE, IL-19.0, N70, VARIABLE DEPTH (SEE CHART)
- ⑨ PR. HOT-MIX ASPHALT BINDER COURSE, IL-9.5FG, N70, 1.25"
- ⑩ PR. AGGREGATE WEDGE SHOULDER, TYPE B
- ⑪ PR. HOT-MIX ASPHALT BASE COURSE, 8.75"
- ⑫ PR. BITUMINOUS MATERIALS (TACK COAT)
- ⑬ PR. SUBBASE GRANULAR MATERIAL, TYPE C
- ⑭ RESERVED
- ⑮ PR. STEEL PLATE BEAM GUARDRAIL 6 FOOT POSTS
- ⑯ PR. THERMOPLASTIC PAVEMENT MARKING - 4"
- ⑰ PR. LONGITUDINAL JOINT SEALANT
- ⑱ PR. SHOULDER RUMBLE STRIPS, 8"

- PAVED SHOULDER REMOVAL
- HMA SURFACE REMOVAL, VARIABLE DEPTH
- GUTTER REMOVAL
- PCC SURFACE REMOVAL, VARIABLE DEPTH

MODEL: Default
FILE NAME: P:\0222\0197A - US 51 over ICRR Bridge Replacement (Phase II)\4 CADD - DWG\4.7 Train\CAD Sheets\0978937-sht-typical.dgn

TWM ENGINEERING GEOSPATIAL SERVICES	TWM, INC. WWW.TWM-INC.COM IL DESIGN FIRM LICENSE NO: 184-001220	USER NAME = bbillhartz	DESIGNED - TBP	REVISED -	STATE OF ILLINOIS DEPARTMENT OF TRANSPORTATION
			DRAWN - BAB	REVISED -	
		PLOT SCALE = 5.000 ' / in.	CHECKED - SJK	REVISED -	
		PLOT DATE = 8/21/2025	DATE - 5/2025	REVISED -	

EXISTING TYPICAL SECTIONS
US 51

SCALE: N.T.S. | SHEET 2 OF 4 SHEETS | STA. | TO STA.

F.A.P. RTE.	SECTION	COUNTY	TOTAL SHEETS	SHEET NO.
322	3VB-3	JACKSON	124	13
		CONTRACT NO. 78937		
		ILLINOIS	FED. AID PROJECT	

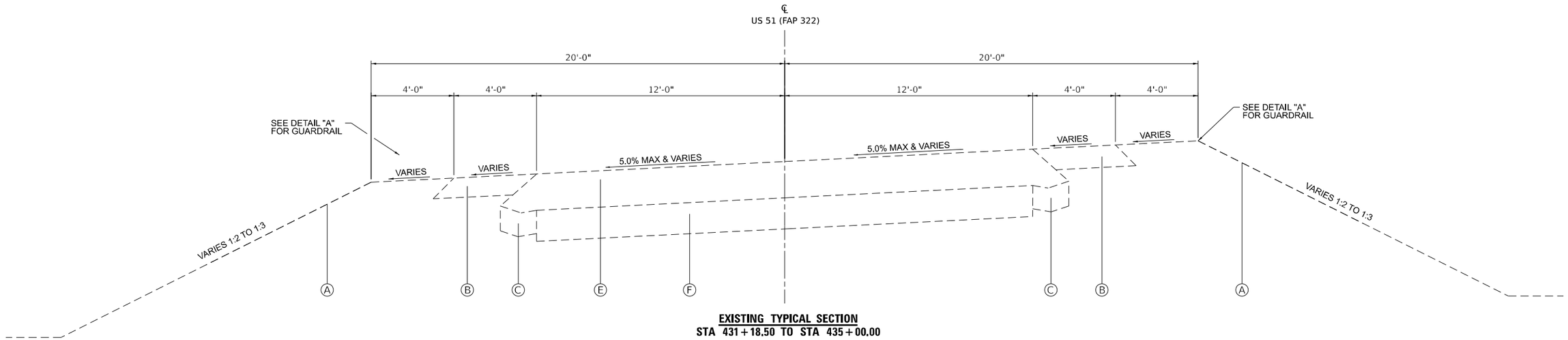

EXISTING TYPICAL SECTION
STA 431+18.50 TO STA 435+00.00

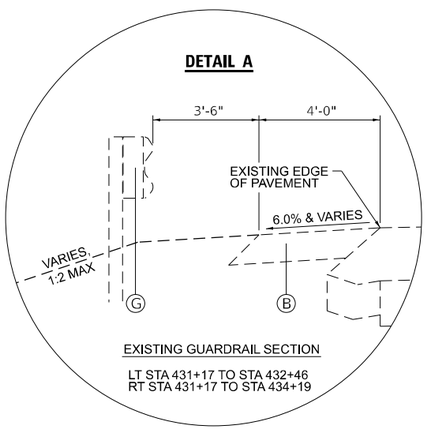

TYPICAL SECTION LEGEND

- Ⓐ EX. EMBANKMENT
- Ⓑ EX. 8" HMA SHOULDER
- Ⓒ EX. CONCRETE GUTTER TYPE B
- Ⓓ EX. HMA SHOULDER
- Ⓔ EX. HMA PAVEMENT
- Ⓕ EX. PCC PAVEMENT
- Ⓖ EX. GUARDRAIL
- Ⓗ EX. GUARDRAIL

- ① PR. EMBANKMENT
- ② PR. HOT-MIX ASPHALT SHOULDERS, VARIABLE DEPTH (SEE CHART)
- ③ PR. HOT-MIX ASPHALT SHOULDERS, 1.5"
- ④ PR. HOT-MIX ASPHALT SHOULDERS, 1.25"
- ⑤ PR. HOT-MIX ASPHALT SURFACE COURSE, MIX D, N70, 1.5"
- ⑥ PR. HOT-MIX ASPHALT SHOULDERS, 6"
- ⑦ PR. PORTLAND CEMENT CONCRETE BASE COURSE, 8.25"
- ⑧ PR. HOT-MIX ASPHALT BINDER COURSE, IL-19.0, N70, VARIABLE DEPTH (SEE CHART)
- ⑨ PR. HOT-MIX ASPHALT BINDER COURSE, IL-9.5FG, N70, 1.25"
- ⑩ PR. AGGREGATE WEDGE SHOULDER, TYPE B
- ⑪ PR. HOT-MIX ASPHALT BASE COURSE, 8.75"
- ⑫ PR. BITUMINOUS MATERIALS (TACK COAT)
- ⑬ PR. SUBBASE GRANULAR MATERIAL, TYPE C
- ⑭ RESERVED
- ⑮ PR. STEEL PLATE BEAM GUARDRAIL 6 FOOT POSTS
- ⑯ PR. THERMOPLASTIC PAVEMENT MARKING - 4"
- ⑰ PR. LONGITUDINAL JOINT SEALANT
- ⑱ PR. SHOULDER RUMBLE STRIPS, 8"

- PAVED SHOULDER REMOVAL
- HMA SURFACE REMOVAL, VARIABLE DEPTH
- GUTTER REMOVAL
- PCC SURFACE REMOVAL, VARIABLE DEPTH

MODEL: Default
FILE NAME: P:\2022\22019\A - US 51 over ICRR Bridge Replacement (Phase II)\4 CADD - DWG\4.7 Trans\CAD Sheets\0278937-sht-typical.dgn

TWM ENGINEERING GEOSPATIAL SERVICES	TWM, INC. WWW.TWM-INC.COM IL DESIGN FIRM LICENSE NO: 184-001220	USER NAME = bbillhartz	DESIGNED - TBP	REVISED -	STATE OF ILLINOIS DEPARTMENT OF TRANSPORTATION
			DRAWN - BAB	REVISED -	
		PLOT SCALE = 5.000 ' / in.	CHECKED - SJK	REVISED -	
		PLOT DATE = 8/21/2025	DATE - 5/2025	REVISED -	

EXISTING TYPICAL SECTIONS
US 51

SCALE: N.T.S. | SHEET 3 OF 4 SHEETS | STA. TO STA.

F.A.P. RTE.	SECTION	COUNTY	TOTAL SHEETS	SHEET NO.
322	3VB-3	JACKSON	124	14
		CONTRACT NO. 78937		
	ILLINOIS	FED. AID PROJECT		

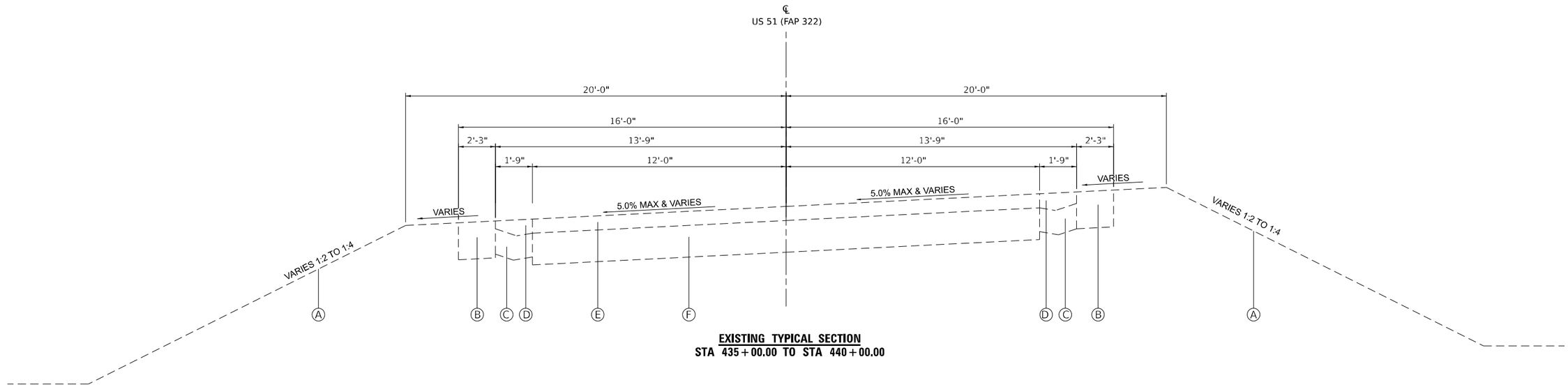

EXISTING TYPICAL SECTION
STA 435+00.00 TO STA 440+00.00

TYPICAL SECTION LEGEND

- Ⓐ EX. EMBANKMENT
- Ⓑ EX. 8" HMA SHOULDER
- Ⓒ EX. CONCRETE GUTTER TYPE B
- Ⓓ EX. HMA SHOULDER
- Ⓔ EX. HMA PAVEMENT
- Ⓕ EX. PCC PAVEMENT
- Ⓖ EX. GUARDRAIL
- Ⓗ EX. GUARDRAIL

- ① PR. EMBANKMENT
- ② PR. HOT-MIX ASPHALT SHOULDERS, VARIABLE DEPTH (SEE CHART)
- ③ PR. HOT-MIX ASPHALT SHOULDERS, 1.5"
- ④ PR. HOT-MIX ASPHALT SHOULDERS, 1.25"
- ⑤ PR. HOT-MIX ASPHALT SURFACE COURSE, MIX D, N70, 1.5"
- ⑥ PR. HOT-MIX ASPHALT SHOULDERS, 6"
- ⑦ PR. PORTLAND CEMENT CONCRETE BASE COURSE, 8.25"
- ⑧ PR. HOT-MIX ASPHALT BINDER COURSE, IL-19.0, N70, VARIABLE DEPTH (SEE CHART)
- ⑨ PR. HOT-MIX ASPHALT BINDER COURSE, IL-9.5FG, N70, 1.25"
- ⑩ PR. AGGREGATE WEDGE SHOULDER, TYPE B
- ⑪ PR. HOT-MIX ASPHALT BASE COURSE, 8.75"

- ⑫ PR. BITUMINOUS MATERIALS (TACK COAT)
- ⑬ PR. SUBBASE GRANULAR MATERIAL, TYPE C
- ⑭ RESERVED
- ⑮ PR. STEEL PLATE BEAM GUARDRAIL 6 FOOT POSTS
- ⑯ PR. THERMOPLASTIC PAVEMENT MARKING - 4"
- ⑰ PR. LONGITUDINAL JOINT SEALANT
- ⑱ PR. SHOULDER RUMBLE STRIPS, 8"

- PAVED SHOULDER REMOVAL
- HMA SURFACE REMOVAL, VARIABLE DEPTH
- GUTTER REMOVAL
- PCC SURFACE REMOVAL, VARIABLE DEPTH

MODEL: Default
FILE NAME: P:\2022\220197A - US 51 over ICRR Bridge Replacement (Phase 1)\4 CADD - DWG\4.7 TranCAD Sheets\0978937-int-typical.dgn

TWM ENGINEERING GEOSPATIAL SERVICES	TWM, INC. WWW.TWM-INC.COM IL DESIGN FIRM LICENSE NO: 184-001220	USER NAME = bbillhartz	DESIGNED - TBP	REVISED -	STATE OF ILLINOIS DEPARTMENT OF TRANSPORTATION
			DRAWN - BAB	REVISED -	
		PLOT SCALE = 5.000 ' / in.	CHECKED - SJK	REVISED -	
		PLOT DATE = 8/21/2025	DATE - 5/2025	REVISED -	

EXISTING TYPICAL SECTIONS
US 51

SCALE: N.T.S. | SHEET 4 OF 4 SHEETS | STA. | TO STA.

F.A.P. RTE.	SECTION	COUNTY	TOTAL SHEETS	SHEET NO.
322	3VB-3	JACKSON	124	15

CONTRACT NO. 78937

ILLINOIS | FED. AID PROJECT

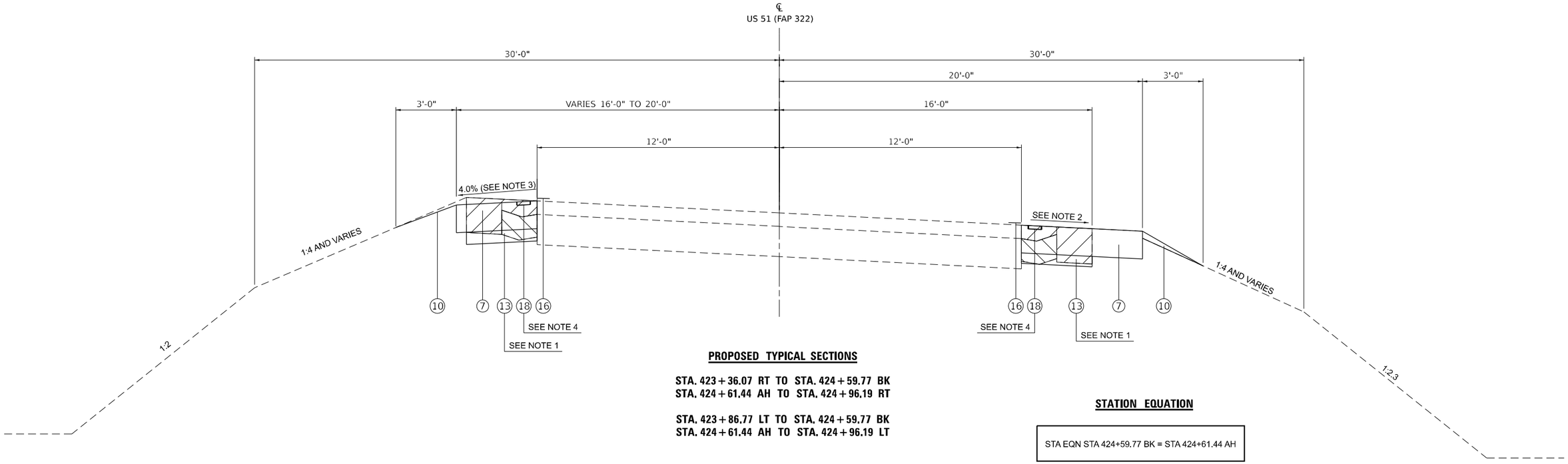

PROPOSED TYPICAL SECTIONS

STA. 423+36.07 RT TO STA. 424+59.77 BK
STA. 424+61.44 AH TO STA. 424+96.19 RT

STA. 423+86.77 LT TO STA. 424+59.77 BK
STA. 424+61.44 AH TO STA. 424+96.19 LT

STATION EQUATION

STA EQN STA 424+59.77 BK = STA 424+61.44 AH

SUPERELEVATION CHART

STA. 424+15.44 END FULL S.E.	5%	5%
STA. 425+50.11 BEGIN TANGENT RUNOUT	0%	1.5%
STA. 425+90.01 END TANGENT RUNOUT	1.5%	1.5%

HORIZONTAL CURVE
PI STA. 414+46.40

NOTES:

1. USE SUBBASE GRANULAR MATERIAL, TYPE C TO FILL VOID LEFT FROM SHOULDER AND GUTTER REMOVAL.
2. SHOULDER SLOPE SHALL MATCH ROADWAY SUPERELEVATION BUT NOT LESS THAN 4%. SEE SUPERELEVATION CHART.
3. THE ALGEBRAIC DIFFERENCE BETWEEN THE ROADWAY AND SHOULDER SLOPE SHALL NOT EXCEED 8%. SEE SUPERELEVATION CHART.
4. CONSTRUCT AFTER STAGE 3.

TYPICAL SECTION LEGEND

- Ⓐ EX. EMBANKMENT
- Ⓑ EX. 8" HMA SHOULDER
- Ⓒ EX. CONCRETE GUTTER TYPE B
- Ⓓ EX. HMA SHOULDER
- Ⓔ EX. HMA PAVEMENT
- Ⓕ EX. PCC PAVEMENT
- Ⓖ EX. GUARDRAIL
- Ⓗ EX. GUARDRAIL

- ① PR. EMBANKMENT
- ② PR. HOT-MIX ASPHALT SHOULDERS, VARIABLE DEPTH (SEE CHART)
- ③ PR. HOT-MIX ASPHALT SHOULDERS, 1.5"
- ④ PR. HOT-MIX ASPHALT SHOULDERS, 1.25"
- ⑤ PR. HOT-MIX ASPHALT SURFACE COURSE, MIX D, N70, 1.5"
- ⑥ PR. HOT-MIX ASPHALT SHOULDERS, 6"
- ⑦ PR. PORTLAND CEMENT CONCRETE BASE COURSE, 8.25"
- ⑧ PR. HOT-MIX ASPHALT BINDER COURSE, IL-19.0, N70, VARIABLE DEPTH (SEE CHART)
- ⑨ PR. HOT-MIX ASPHALT BINDER COURSE, IL-9.5FG, N70, 1.25"
- ⑩ PR. AGGREGATE WEDGE SHOULDER, TYPE B
- ⑪ PR. HOT-MIX ASPHALT BASE COURSE, 8.75"

- ⑫ PR. BITUMINOUS MATERIALS (TACK COAT)
- ⑬ PR. SUBBASE GRANULAR MATERIAL, TYPE C
- ⑭ RESERVED
- ⑮ PR. STEEL PLATE BEAM GUARDRAIL 6 FOOT POSTS
- ⑯ PR. THERMOPLASTIC PAVEMENT MARKING - 4"
- ⑰ PR. LONGITUDINAL JOINT SEALANT
- ⑱ PR. SHOULDER RUMBLE STRIPS, 8"

- PAVED SHOULDER REMOVAL
- HMA SURFACE REMOVAL, VARIABLE DEPTH
- GUTTER REMOVAL
- PCC SURFACE REMOVAL, VARIABLE DEPTH

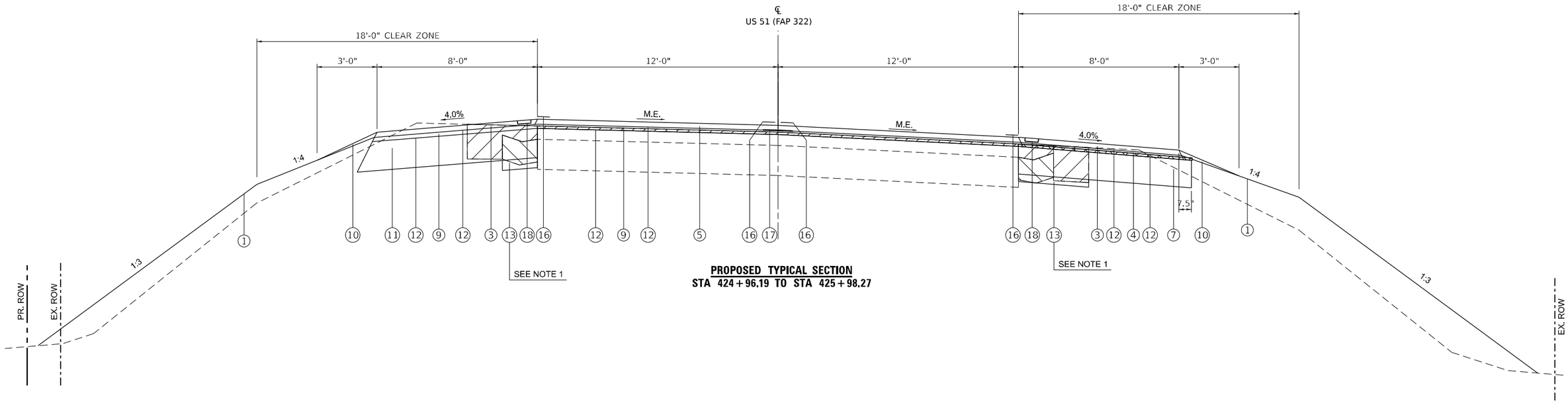

PROPOSED TYPICAL SECTION
STA 424+96.19 TO STA 425+98.27

SUPERELEVATION CHART

STA. 424+15.44 END FULL S.E.	5%	5%
STA. 425+50.11 BEGIN TANGENT RUNOUT	0%	1.5%
STA. 425+90.01 END TANGENT RUNOUT	1.5%	1.5%

HORIZONTAL CURVE
PI STA. 414+46.40

NOTES:

1. USE SUBBASE GRANULAR MATERIAL, TYPE C TO FILL VOID LEFT FROM SHOULDER AND GUTTER REMOVAL.

TYPICAL SECTION LEGEND

- Ⓐ EX. EMBANKMENT
- Ⓑ EX. 8" HMA SHOULDER
- Ⓒ EX. CONCRETE GUTTER TYPE B
- Ⓓ EX. HMA SHOULDER
- Ⓔ EX. HMA PAVEMENT
- Ⓕ EX. PCC PAVEMENT
- Ⓖ EX. GUARDRAIL
- Ⓗ EX. GUARDRAIL

- ① PR. EMBANKMENT
- ② PR. HOT-MIX ASPHALT SHOULDERS, VARIABLE DEPTH (SEE CHART)
- ③ PR. HOT-MIX ASPHALT SHOULDERS, 1.5"
- ④ PR. HOT-MIX ASPHALT SHOULDERS, 1.25"
- ⑤ PR. HOT-MIX ASPHALT SURFACE COURSE, MIX D, N70, 1.5"
- ⑥ PR. HOT-MIX ASPHALT SHOULDERS, 6"
- ⑦ PR. PORTLAND CEMENT CONCRETE BASE COURSE, 8.25"
- ⑧ PR. HOT-MIX ASPHALT BINDER COURSE, IL-19.0, N70, VARIABLE DEPTH (SEE CHART)
- ⑨ PR. HOT-MIX ASPHALT BINDER COURSE, IL-9.5FG, N70, 1.25"
- ⑩ PR. AGGREGATE WEDGE SHOULDER, TYPE B
- ⑪ PR. HOT-MIX ASPHALT BASE COURSE, 8.75"

- ⑫ PR. BITUMINOUS MATERIALS (TACK COAT)
- ⑬ PR. SUBBASE GRANULAR MATERIAL, TYPE C
- ⑭ RESERVED
- ⑮ PR. STEEL PLATE BEAM GUARDRAIL 6 FOOT POSTS
- ⑯ PR. THERMOPLASTIC PAVEMENT MARKING - 4"
- ⑰ PR. LONGITUDINAL JOINT SEALANT
- ⑱ PR. SHOULDER RUMBLE STRIPS, 8"

- PAVED SHOULDER REMOVAL
- HMA SURFACE REMOVAL, VARIABLE DEPTH
- GUTTER REMOVAL
- PCC SURFACE REMOVAL, VARIABLE DEPTH

MODEL: Default
FILE NAME: P:\0222\22197A - US 51 over ICRR Bridge Replacement (Phase II)\ CADD - DWG\4.7 Train\CAD Sheets\0978937-sht-typicals.dgn

TWM ENGINEERING GEOSPATIAL SERVICES	TWM, INC. WWW.TWM-INC.COM IL DESIGN FIRM LICENSE NO: 184-001220	USER NAME = bbillhartz	DESIGNED - TBP
			DRAWN - BAB
		PLOT SCALE = 5,000 ' / in.	CHECKED - SJK
		PLOT DATE = 8/21/2025	DATE - 5/2025

REVISED -
REVISED -
REVISED -
REVISED -

STATE OF ILLINOIS
DEPARTMENT OF TRANSPORTATION

PROPOSED TYPICAL SECTIONS
US 51

SCALE: N.T.S. | SHEET 2 OF 11 SHEETS | STA. | TO STA.

F.A.P. RTE.	SECTION	COUNTY	TOTAL SHEETS	SHEET NO.
322	3VB-3	JACKSON	124	17

CONTRACT NO. 78937

ILLINOIS | FED. AID PROJECT

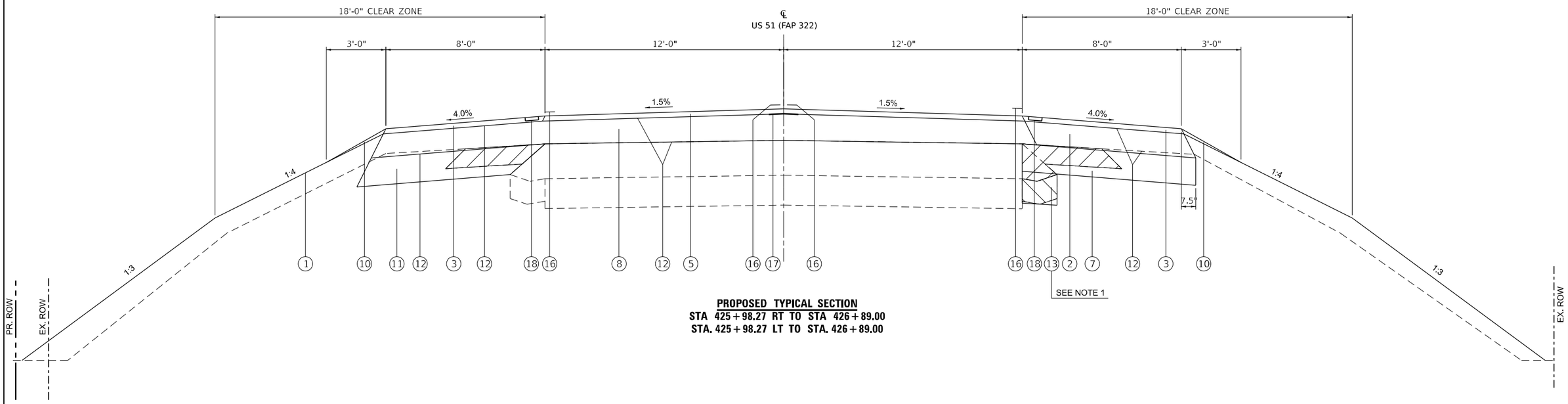

PROPOSED TYPICAL SECTION
STA 425+98.27 RT TO STA 426+89.00
STA. 425+98.27 LT TO STA. 426+89.00

NOTES:

1. USE SUBBASE GRANULAR MATERIAL, TYPE C TO FILL VOID LEFT FROM SHOULDER AND GUTTER REMOVAL.

HMA SHOULDERS, VARIABLE DEPTH CHART

STA. 425+98.27 TO STA. 428+99.28		
1.25"	TO	15.5"

HMA BINDER COURSE, VARIABLE DEPTH CHART

STA. 425+98.27 TO STA. 428+99.28		
1.25"	TO	15.5"

TYPICAL SECTION LEGEND

- Ⓐ EX. EMBANKMENT
- Ⓑ EX. 8" HMA SHOULDER
- Ⓒ EX. CONCRETE GUTTER TYPE B
- Ⓓ EX. HMA SHOULDER
- Ⓔ EX. HMA PAVEMENT
- Ⓕ EX. PCC PAVEMENT
- Ⓖ EX. GUARDRAIL
- Ⓗ EX. GUARDRAIL

- ① PR. EMBANKMENT
- ② PR. HOT-MIX ASPHALT SHOULDERS, VARIABLE DEPTH (SEE CHART)
- ③ PR. HOT-MIX ASPHALT SHOULDERS, 1.5"
- ④ PR. HOT-MIX ASPHALT SHOULDERS, 1.25"
- ⑤ PR. HOT-MIX ASPHALT SURFACE COURSE, MIX D, N70, 1.5"
- ⑥ PR. HOT-MIX ASPHALT SHOULDERS, 6"
- ⑦ PR. PORTLAND CEMENT CONCRETE BASE COURSE, 8.25"
- ⑧ PR. HOT-MIX ASPHALT BINDER COURSE, IL-19.0, N70, VARIABLE DEPTH (SEE CHART)
- ⑨ PR. HOT-MIX ASPHALT BINDER COURSE, IL-9.5FG, N70, 1.25"
- ⑩ PR. AGGREGATE WEDGE SHOULDER, TYPE B
- ⑪ PR. HOT-MIX ASPHALT BASE COURSE, 8.75"
- ⑫ PR. BITUMINOUS MATERIALS (TACK COAT)
- ⑬ PR. SUBBASE GRANULAR MATERIAL, TYPE C
- ⑭ RESERVED
- ⑮ PR. STEEL PLATE BEAM GUARDRAIL 6 FOOT POSTS
- ⑯ PR. THERMOPLASTIC PAVEMENT MARKING - 4"
- ⑰ PR. LONGITUDINAL JOINT SEALANT
- ⑱ PR. SHOULDER RUMBLE STRIPS, 8"

- PAVED SHOULDER REMOVAL
- HMA SURFACE REMOVAL, VARIABLE DEPTH
- GUTTER REMOVAL
- PCC SURFACE REMOVAL, VARIABLE DEPTH

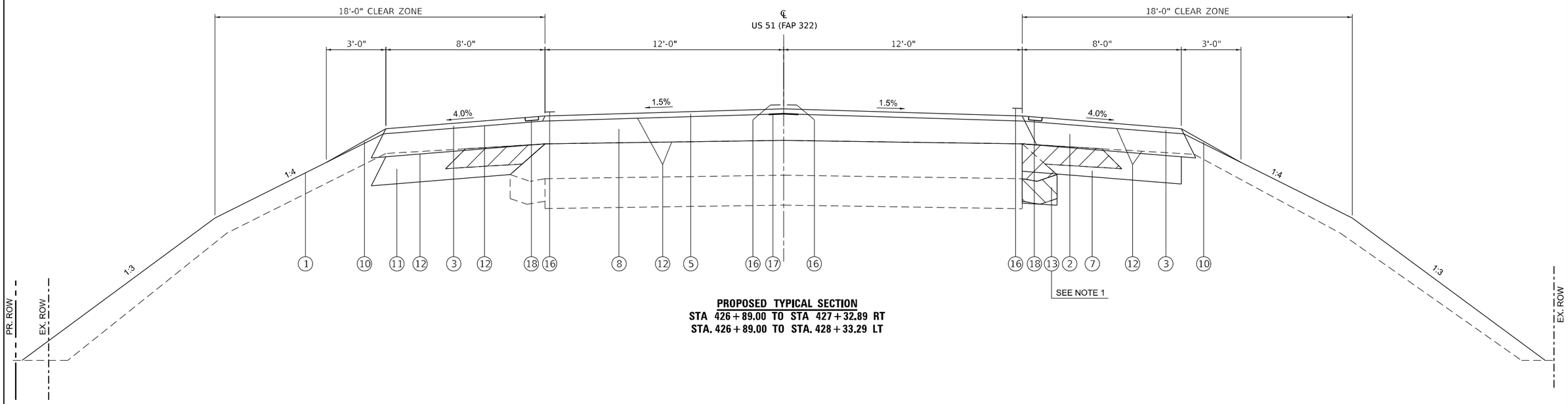

PROPOSED TYPICAL SECTION
STA 426+89.00 TO STA 427+32.89 RT
STA. 426+89.00 TO STA. 428+33.29 LT

NOTES:

1. USE SUBBASE GRANULAR MATERIAL, TYPE C TO FILL VOID LEFT FROM SHOULDER AND GUTTER REMOVAL.

HMA SHOULDERS, VARIABLE DEPTH

STA. 425+98.27 TO STA. 428+99.28		
1.25"	TO	15.5"

HMA BINDER COURSE, VARIABLE DEPTH

STA. 425+98.27 TO STA. 428+99.28		
1.25"	TO	15.5"

TYPICAL SECTION LEGEND

- Ⓐ EX. EMBANKMENT
- Ⓑ EX. 8" HMA SHOULDER
- Ⓒ EX. CONCRETE GUTTER TYPE B
- Ⓓ EX. HMA SHOULDER
- Ⓔ EX. HMA PAVEMENT
- Ⓕ EX. PCC PAVEMENT
- Ⓖ EX. GUARDRAIL
- Ⓗ EX. GUARDRAIL

- ① PR. EMBANKMENT
- ② PR. HOT-MIX ASPHALT SHOULDERS, VARIABLE DEPTH (SEE CHART)
- ③ PR. HOT-MIX ASPHALT SHOULDERS, 1.5"
- ④ PR. HOT-MIX ASPHALT SHOULDERS, 1.25"
- ⑤ PR. HOT-MIX ASPHALT SURFACE COURSE, MIX D, N70, 1.5"
- ⑥ PR. HOT-MIX ASPHALT SHOULDERS, 6"
- ⑦ PR. PORTLAND CEMENT CONCRETE BASE COURSE, 8.25"
- ⑧ PR. HOT-MIX ASPHALT BINDER COURSE, IL-19.0, N70, VARIABLE DEPTH (SEE CHART)
- ⑨ PR. HOT-MIX ASPHALT BINDER COURSE, IL-9.5FG, N70, 1.25"
- ⑩ PR. AGGREGATE WEDGE SHOULDER, TYPE B
- ⑪ PR. HOT-MIX ASPHALT BASE COURSE, 8.75"
- ⑫ PR. BITUMINOUS MATERIALS (TACK COAT)
- ⑬ PR. SUBBASE GRANULAR MATERIAL, TYPE C
- ⑭ RESERVED
- ⑮ PR. STEEL PLATE BEAM GUARDRAIL 6 FOOT POSTS
- ⑯ PR. THERMOPLASTIC PAVEMENT MARKING - 4"
- ⑰ PR. LONGITUDINAL JOINT SEALANT
- ⑱ PR. SHOULDER RUMBLE STRIPS, 8"

- PAVED SHOULDER REMOVAL
- HMA SURFACE REMOVAL, VARIABLE DEPTH
- GUTTER REMOVAL
- PCC SURFACE REMOVAL, VARIABLE DEPTH

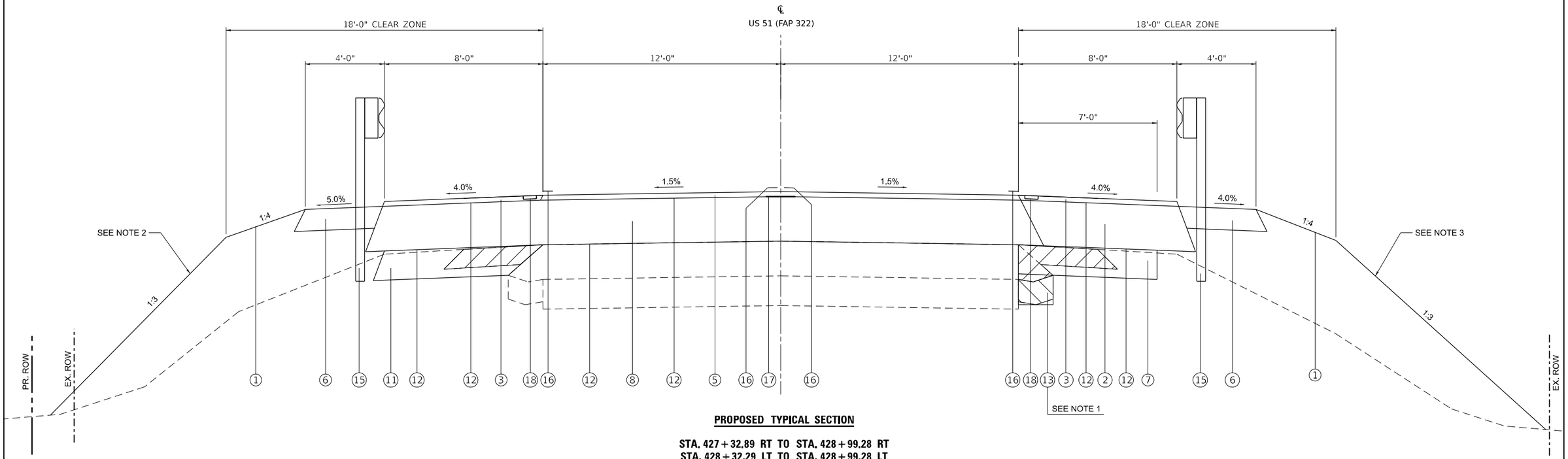

PROPOSED TYPICAL SECTION

STA. 427+32.89 RT TO STA. 428+99.28 RT
STA. 428+32.29 LT TO STA. 428+99.28 LT

PR SN 039-0084

PROPOSED BRIDGE APPROACH SLABS AND CONNECTOR PAVEMENT STA. 428+99.28 TO STA. 431+86.72

NOTES:

1. USE SUBBASE GRANULAR MATERIAL, TYPE C TO FILL VOID LEFT FROM SHOULDER AND GUTTER REMOVAL.
2. AT NORTHWEST QUADRANT OF BRIDGE (BEHIND GUARDRAIL), TRANSITION FROM 1:4/1:3 BARN ROOF SLOPES TO 1:2 SLOPES AT BACK OF ABUTMENT FROM STA. 428+78.18 TO STA. 429+70.14.
3. AT SOUTHWEST QUADRANT OF THE BRIDGE (BEHIND GUARDRAIL), TRANSITION FROM 1:4/1:3 BARN ROOF SLOPES TO 1:2 SLOPES AT BACK OF ABUTMENT FROM STA. 429+14.63 TO STA. 429+39.00.

HMA SHOULDERS, VARIABLE DEPTH CHART

STA. 425+98.27 TO STA. 428+99.28		
1.25"	TO	15.5"

HMA BINDER COURSE, VARIABLE DEPTH CHART

STA. 425+98.27 TO STA. 428+99.28		
1.25"	TO	15.5"

TYPICAL SECTION LEGEND

- Ⓐ EX. EMBANKMENT
- Ⓑ EX. 8" HMA SHOULDER
- Ⓒ EX. CONCRETE GUTTER TYPE B
- Ⓓ EX. HMA SHOULDER
- Ⓔ EX. HMA PAVEMENT
- Ⓕ EX. PCC PAVEMENT
- Ⓖ EX. GUARDRAIL
- Ⓗ EX. GUARDRAIL

- ① PR. EMBANKMENT
- ② PR. HOT-MIX ASPHALT SHOULDERS, VARIABLE DEPTH (SEE CHART)
- ③ PR. HOT-MIX ASPHALT SHOULDERS, 1.5"
- ④ PR. HOT-MIX ASPHALT SHOULDERS, 1.25"
- ⑤ PR. HOT-MIX ASPHALT SURFACE COURSE, MIX D, N70, 1.5"
- ⑥ PR. HOT-MIX ASPHALT SHOULDERS, 6"
- ⑦ PR. PORTLAND CEMENT CONCRETE BASE COURSE, 8.25"
- ⑧ PR. HOT-MIX ASPHALT BINDER COURSE, IL-19.0, N70, VARIABLE DEPTH (SEE CHART)
- ⑨ PR. HOT-MIX ASPHALT BINDER COURSE, IL-9.5FG, N70, 1.25"
- ⑩ PR. AGGREGATE WEDGE SHOULDER, TYPE B
- ⑪ PR. HOT-MIX ASPHALT BASE COURSE, 8.75"
- ⑫ PR. BITUMINOUS MATERIALS (TACK COAT)
- ⑬ PR. SUBBASE GRANULAR MATERIAL, TYPE C
- ⑭ RESERVED
- ⑮ PR. STEEL PLATE BEAM GUARDRAIL 6 FOOT POSTS
- ⑯ PR. THERMOPLASTIC PAVEMENT MARKING - 4"
- ⑰ PR. LONGITUDINAL JOINT SEALANT
- ⑱ PR. SHOULDER RUMBLE STRIPS, 8"

- PAVED SHOULDER REMOVAL
- HMA SURFACE REMOVAL, VARIABLE DEPTH
- GUTTER REMOVAL
- PCC SURFACE REMOVAL, VARIABLE DEPTH

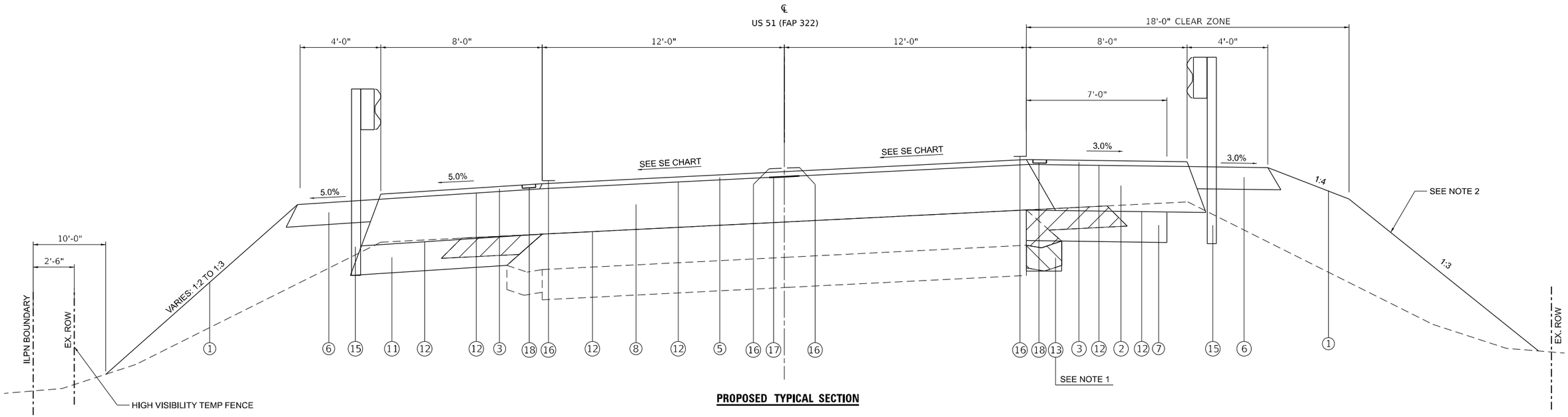

PROPOSED TYPICAL SECTION

STA. 431 + 86.72 TO STA. 432 + 53.68

SUPERELEVATION CHART

STA. 431+44.04 BEGIN TANGENT RUNOUT	1.5%	1.5%
STA. 431+84.00 END TANGENT RUNOUT	1.5%	0%
STA. 433+16.94 BEGIN FULL S.E.	5%	5%

HORIZONTAL CURVE
PI STA. 450+09.28

NOTES:

1. USE SUBBASE GRANULAR MATERIAL, TYPE C TO FILL VOID LEFT FROM SHOULDER AND GUTTER REMOVAL.
2. AT SOUTHEAST QUADRANT OF THE BRIDGE (BEHIND GUARDAIL), TRANSITION FROM 1:2 SLOPES TO 1:4/1:3 BARN ROOF SLOPES FROM STA. 431+15.86 TO STA. 431+48.63.

HMA SHOULDERS, VARIABLE DEPTH CHART

STA. 431+86.72 TO STA. 434+87.85		
18.0"	TO	1.25"

HMA BINDER COURSE, VARIABLE DEPTH CHART

STA. 431+86.72 TO STA. 434+87.85		
18.0"	TO	1.25"

TYPICAL SECTION LEGEND

- Ⓐ EX. EMBANKMENT
- Ⓑ EX. 8" HMA SHOULDER
- Ⓒ EX. CONCRETE GUTTER TYPE B
- Ⓓ EX. HMA SHOULDER
- Ⓔ EX. HMA PAVEMENT
- Ⓕ EX. PCC PAVEMENT
- Ⓖ EX. GUARDRAIL
- Ⓗ EX. GUARDRAIL

- ① PR. EMBANKMENT
- ② PR. HOT-MIX ASPHALT SHOULDERS, VARIABLE DEPTH (SEE CHART)
- ③ PR. HOT-MIX ASPHALT SHOULDERS, 1.5"
- ④ PR. HOT-MIX ASPHALT SHOULDERS, 1.25"
- ⑤ PR. HOT-MIX ASPHALT SURFACE COURSE, MIX D, N70, 1.5"
- ⑥ PR. HOT-MIX ASPHALT SHOULDERS, 6"
- ⑦ PR. PORTLAND CEMENT CONCRETE BASE COURSE, 8.25"
- ⑧ PR. HOT-MIX ASPHALT BINDER COURSE, IL-19.0, N70, VARIABLE DEPTH (SEE CHART)
- ⑨ PR. HOT-MIX ASPHALT BINDER COURSE, IL-9.5FG, N70, 1.25"
- ⑩ PR. AGGREGATE WEDGE SHOULDER, TYPE B
- ⑪ PR. HOT-MIX ASPHALT BASE COURSE, 8.75"
- ⑫ PR. BITUMINOUS MATERIALS (TACK COAT)
- ⑬ PR. SUBBASE GRANULAR MATERIAL, TYPE C
- ⑭ RESERVED
- ⑮ PR. STEEL PLATE BEAM GUARDRAIL 6 FOOT POSTS
- ⑯ PR. THERMOPLASTIC PAVEMENT MARKING - 4"
- ⑰ PR. LONGITUDINAL JOINT SEALANT
- ⑱ PR. SHOULDER RUMBLE STRIPS, 8"

- PAVED SHOULDER REMOVAL
- HMA SURFACE REMOVAL, VARIABLE DEPTH
- GUTTER REMOVAL
- PCC SURFACE REMOVAL, VARIABLE DEPTH

MODEL: Default
FILE NAME: P:\0222\22197A - US 51 over ICRR Bridge Replacement (Phase II)\ CADD - DWG\4.7 Train\CAD Sheets\0978937-sht-typical.dgn

TWM ENGINEERING GEOSPATIAL SERVICES TWM, INC. WWW.TWM-INC.COM IL DESIGN FIRM LICENSE NO: 184-001220	USER NAME = bbillhartz	DESIGNED - TBP	REVISED -	STATE OF ILLINOIS DEPARTMENT OF TRANSPORTATION
		DRAWN - BAB	REVISED -	
	PLOT SCALE = 5,000 ' / in.	CHECKED - SJK	REVISED -	
	PLOT DATE = 8/21/2025	DATE - 5/2025	REVISED -	

PROPOSED TYPICAL SECTIONS
US 51

SCALE: N.T.S. | SHEET 6 OF 11 SHEETS | STA. | TO STA.

F.A.P. RTE.	SECTION	COUNTY	TOTAL SHEETS	SHEET NO.
322	3VB-3	JACKSON	124	21

CONTRACT NO. 78937

ILLINOIS | FED. AID PROJECT

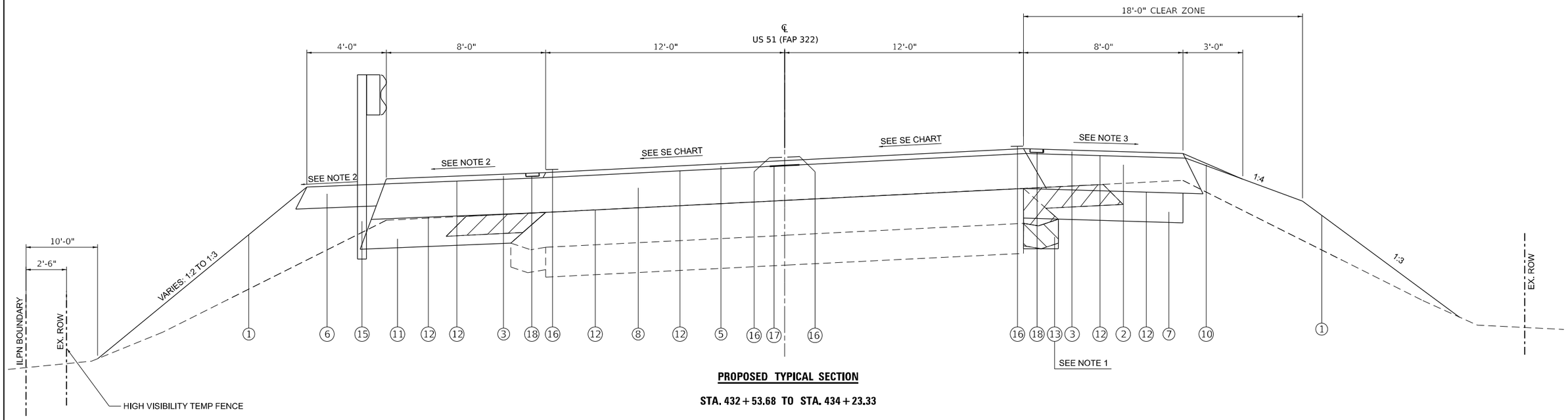

PROPOSED TYPICAL SECTION

STA. 432 + 53.68 TO STA. 434 + 23.33

SUPERELEVATION CHART

STA. 431+44.04 BEGIN TANGENT RUNOUT	1.5%	1.5%
STA. 431+84.00 END TANGENT RUNOUT	1.5%	0%
STA. 433+16.94 BEGIN FULL S.E.	5%	5%

HORIZONTAL CURVE
PI STA. 450+09.28

NOTES:

1. USE SUBBASE GRANULAR MATERIAL, TYPE C TO FILL VOID LEFT FROM SHOULDER AND GUTTER REMOVAL.
2. SHOULDER SLOPE SHALL MATCH ROADWAY SUPERELEVATION BUT NOT LESS THAN 4%. SEE SUPERELEVATION CHART.
3. THE ALGEBRAIC DIFFERENCE BETWEEN THE ROADWAY AND SHOULDER SLOPE SHALL NOT EXCEED 8%. SEE SUPERELEVATION CHART.

HMA SHOULDERS, VARIABLE DEPTH CHART

STA. 431+86.72 TO STA. 434+87.85		
18.0"	TO	1.25"

HMA BINDER COURSE, VARIABLE DEPTH CHART

STA. 431+86.72 TO STA. 434+87.85		
18.0"	TO	1.25"

TYPICAL SECTION LEGEND

- Ⓐ EX. EMBANKMENT
- Ⓑ EX. 8" HMA SHOULDER
- Ⓒ EX. CONCRETE GUTTER TYPE B
- Ⓓ EX. HMA SHOULDER
- Ⓔ EX. HMA PAVEMENT
- Ⓕ EX. PCC PAVEMENT
- Ⓖ EX. GUARDRAIL
- Ⓗ EX. GUARDRAIL

- ① PR. EMBANKMENT
- ② PR. HOT-MIX ASPHALT SHOULDERS, VARIABLE DEPTH (SEE CHART)
- ③ PR. HOT-MIX ASPHALT SHOULDERS, 1.5"
- ④ PR. HOT-MIX ASPHALT SHOULDERS, 1.25"
- ⑤ PR. HOT-MIX ASPHALT SURFACE COURSE, MIX D, N70, 1.5"
- ⑥ PR. HOT-MIX ASPHALT SHOULDERS, 6"
- ⑦ PR. PORTLAND CEMENT CONCRETE BASE COURSE, 8.25"
- ⑧ PR. HOT-MIX ASPHALT BINDER COURSE, IL-19.0, N70, VARIABLE DEPTH (SEE CHART)
- ⑨ PR. HOT-MIX ASPHALT BINDER COURSE, IL-9.5FG, N70, 1.25"
- ⑩ PR. AGGREGATE WEDGE SHOULDER, TYPE B
- ⑪ PR. HOT-MIX ASPHALT BASE COURSE, 8.75"
- ⑫ PR. BITUMINOUS MATERIALS (TACK COAT)
- ⑬ PR. SUBBASE GRANULAR MATERIAL, TYPE C
- ⑭ RESERVED
- ⑮ PR. STEEL PLATE BEAM GUARDRAIL 6 FOOT POSTS
- ⑯ PR. THERMOPLASTIC PAVEMENT MARKING - 4"
- ⑰ PR. LONGITUDINAL JOINT SEALANT
- ⑱ PR. SHOULDER RUMBLE STRIPS, 8"

- PAVED SHOULDER REMOVAL
- HMA SURFACE REMOVAL, VARIABLE DEPTH
- GUTTER REMOVAL
- PCC SURFACE REMOVAL, VARIABLE DEPTH

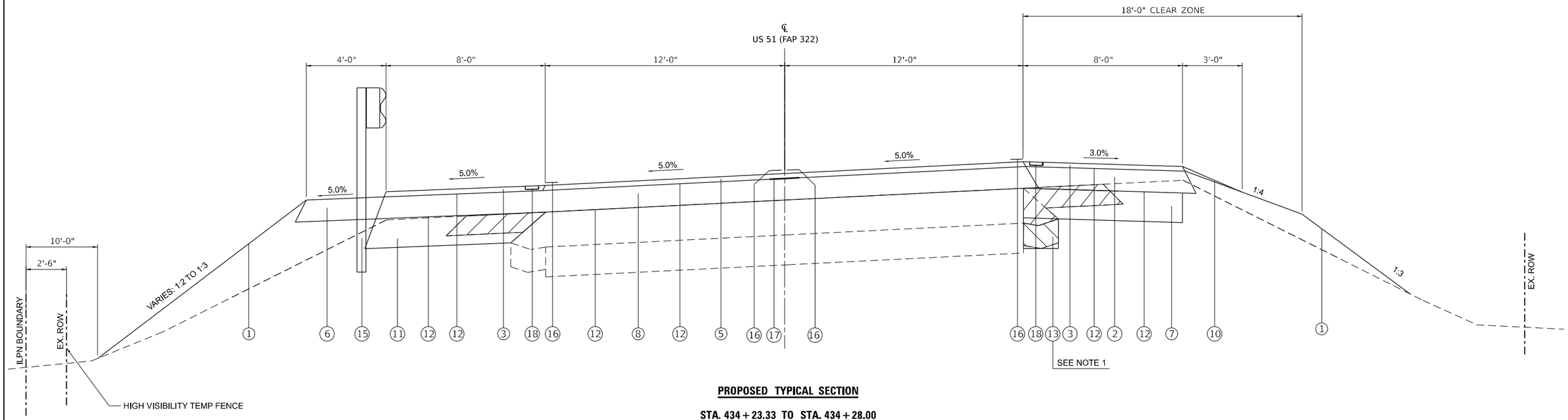

PROPOSED TYPICAL SECTION

STA. 434 + 23.33 TO STA. 434 + 28.00

NOTES:

1. USE SUBBASE GRANULAR MATERIAL, TYPE C TO FILL VOID LEFT FROM SHOULDER AND GUTTER REMOVAL.

HMA SHOULDERS, VARIABLE DEPTH CHART

STA. 431+86.72 TO STA. 434+87.85		
18.0"	TO	1.25"

HMA BINDER COURSE, VARIABLE DEPTH CHART

STA. 431+86.72 TO STA. 434+87.85		
18.0"	TO	1.25"

TYPICAL SECTION LEGEND

- Ⓐ EX. EMBANKMENT
- Ⓑ EX. 8" HMA SHOULDER
- Ⓒ EX. CONCRETE GUTTER TYPE B
- Ⓓ EX. HMA SHOULDER
- Ⓔ EX. HMA PAVEMENT
- Ⓕ EX. PCC PAVEMENT
- Ⓖ EX. GUARDRAIL
- Ⓗ EX. GUARDRAIL

- ① PR. EMBANKMENT
- ② PR. HOT-MIX ASPHALT SHOULDERS, VARIABLE DEPTH (SEE CHART)
- ③ PR. HOT-MIX ASPHALT SHOULDERS, 1.5"
- ④ PR. HOT-MIX ASPHALT SHOULDERS, 1.25"
- ⑤ PR. HOT-MIX ASPHALT SURFACE COURSE, MIX D, N70, 1.5"
- ⑥ PR. HOT-MIX ASPHALT SHOULDERS, 6"
- ⑦ PR. PORTLAND CEMENT CONCRETE BASE COURSE, 8.25"
- ⑧ PR. HOT-MIX ASPHALT BINDER COURSE, IL-19.0, N70, VARIABLE DEPTH (SEE CHART)
- ⑨ PR. HOT-MIX ASPHALT BINDER COURSE, IL-9.5FG, N70, 1.25"
- ⑩ PR. AGGREGATE WEDGE SHOULDER, TYPE B
- ⑪ PR. HOT-MIX ASPHALT BASE COURSE, 8.75"
- ⑫ PR. BITUMINOUS MATERIALS (TACK COAT)
- ⑬ PR. SUBBASE GRANULAR MATERIAL, TYPE C
- ⑭ RESERVED
- ⑮ PR. STEEL PLATE BEAM GUARDRAIL 6 FOOT POSTS
- ⑯ PR. THERMOPLASTIC PAVEMENT MARKING - 4"
- ⑰ PR. LONGITUDINAL JOINT SEALANT
- ⑱ PR. SHOULDER RUMBLE STRIPS, 8"

- PAVED SHOULDER REMOVAL
- HMA SURFACE REMOVAL, VARIABLE DEPTH
- GUTTER REMOVAL
- PCC SURFACE REMOVAL, VARIABLE DEPTH

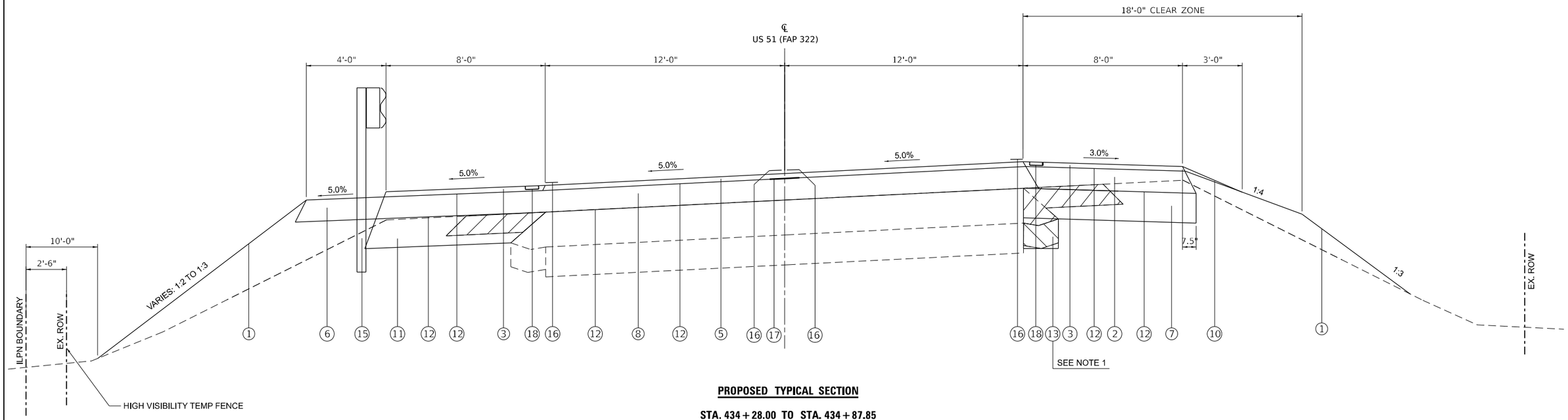

PROPOSED TYPICAL SECTION

STA. 434 + 28.00 TO STA. 434 + 87.85

NOTES:

1. USE SUBBASE GRANULAR MATERIAL, TYPE C TO FILL VOID LEFT FROM SHOULDER AND GUTTER REMOVAL.

HMA SHOULDERS, VARIABLE DEPTH CHART

STA. 431+86.72 TO STA. 434+87.85		
18.0"	TO	1.25"

HMA BINDER COURSE, VARIABLE DEPTH CHART

STA. 431+86.72 TO STA. 434+87.85		
18.0"	TO	1.25"

TYPICAL SECTION LEGEND

- Ⓐ EX. EMBANKMENT
- Ⓑ EX. 8" HMA SHOULDER
- Ⓒ EX. CONCRETE GUTTER TYPE B
- Ⓓ EX. HMA SHOULDER
- Ⓔ EX. HMA PAVEMENT
- Ⓕ EX. PCC PAVEMENT
- Ⓖ EX. GUARDRAIL
- Ⓗ EX. GUARDRAIL

- ① PR. EMBANKMENT
- ② PR. HOT-MIX ASPHALT SHOULDERS, VARIABLE DEPTH (SEE CHART)
- ③ PR. HOT-MIX ASPHALT SHOULDERS, 1.5"
- ④ PR. HOT-MIX ASPHALT SHOULDERS, 1.25"
- ⑤ PR. HOT-MIX ASPHALT SURFACE COURSE, MIX D, N70, 1.5"
- ⑥ PR. HOT-MIX ASPHALT SHOULDERS, 6"
- ⑦ PR. PORTLAND CEMENT CONCRETE BASE COURSE, 8.25"
- ⑧ PR. HOT-MIX ASPHALT BINDER COURSE, IL-19.0, N70, VARIABLE DEPTH (SEE CHART)
- ⑨ PR. HOT-MIX ASPHALT BINDER COURSE, IL-9.5FG, N70, 1.25"
- ⑩ PR. AGGREGATE WEDGE SHOULDER, TYPE B
- ⑪ PR. HOT-MIX ASPHALT BASE COURSE, 8.75"
- ⑫ PR. BITUMINOUS MATERIALS (TACK COAT)
- ⑬ PR. SUBBASE GRANULAR MATERIAL, TYPE C
- ⑭ RESERVED
- ⑮ PR. STEEL PLATE BEAM GUARDRAIL 6 FOOT POSTS
- ⑯ PR. THERMOPLASTIC PAVEMENT MARKING - 4"
- ⑰ PR. LONGITUDINAL JOINT SEALANT
- ⑱ PR. SHOULDER RUMBLE STRIPS, 8"

- PAVED SHOULDER REMOVAL
- HMA SURFACE REMOVAL, VARIABLE DEPTH
- GUTTER REMOVAL
- PCC SURFACE REMOVAL, VARIABLE DEPTH

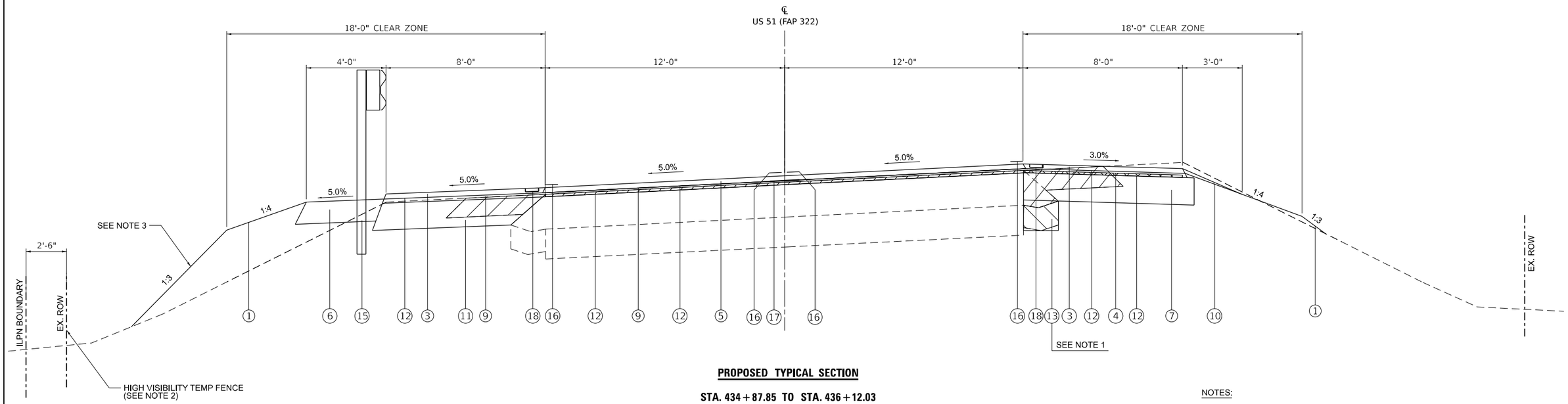

PROPOSED TYPICAL SECTION

STA. 434 + 87.85 TO STA. 436 + 12.03

NOTES:

1. USE SUBBASE GRANULAR MATERIAL, TYPE C TO FILL VOID LEFT FROM SHOULDER AND GUTTER REMOVAL.
2. FROM STA. 435+00.71 TO STA. 436+12.70, HIGH VISIBILITY TEMPORARY FENCING SHALL BE SET AT 2'-6" OFF ILPN BOUNDARY AND NOT AT EXISTING ROW.
3. AT STA. 435+00.00, TRANSITION FROM VARIABLE SLOPE TO 1:4/1:3 BARN ROOF SLOPES.

TYPICAL SECTION LEGEND

- Ⓐ EX. EMBANKMENT
- Ⓑ EX. 8" HMA SHOULDER
- Ⓒ EX. CONCRETE GUTTER TYPE B
- Ⓓ EX. HMA SHOULDER
- Ⓔ EX. HMA PAVEMENT
- Ⓕ EX. PCC PAVEMENT
- Ⓖ EX. GUARDRAIL
- Ⓗ EX. GUARDRAIL

- ① PR. EMBANKMENT
- ② PR. HOT-MIX ASPHALT SHOULDERS, VARIABLE DEPTH (SEE CHART)
- ③ PR. HOT-MIX ASPHALT SHOULDERS, 1.5"
- ④ PR. HOT-MIX ASPHALT SHOULDERS, 1.25"
- ⑤ PR. HOT-MIX ASPHALT SURFACE COURSE, MIX D, N70, 1.5"
- ⑥ PR. HOT-MIX ASPHALT SHOULDERS, 6"
- ⑦ PR. PORTLAND CEMENT CONCRETE BASE COURSE, 8.25"
- ⑧ PR. HOT-MIX ASPHALT BINDER COURSE, IL-19.0, N70, VARIABLE DEPTH (SEE CHART)
- ⑨ PR. HOT-MIX ASPHALT BINDER COURSE, IL-9.5FG, N70, 1.25"
- ⑩ PR. AGGREGATE WEDGE SHOULDER, TYPE B
- ⑪ PR. HOT-MIX ASPHALT BASE COURSE, 8.75"
- ⑫ PR. BITUMINOUS MATERIALS (TACK COAT)
- ⑬ PR. SUBBASE GRANULAR MATERIAL, TYPE C
- ⑭ RESERVED
- ⑮ PR. STEEL PLATE BEAM GUARDRAIL 6 FOOT POSTS
- ⑯ PR. THERMOPLASTIC PAVEMENT MARKING - 4"
- ⑰ PR. LONGITUDINAL JOINT SEALANT
- ⑱ PR. SHOULDER RUMBLE STRIPS, 8"

- PAVED SHOULDER REMOVAL
- HMA SURFACE REMOVAL, VARIABLE DEPTH
- GUTTER REMOVAL
- PCC SURFACE REMOVAL, VARIABLE DEPTH

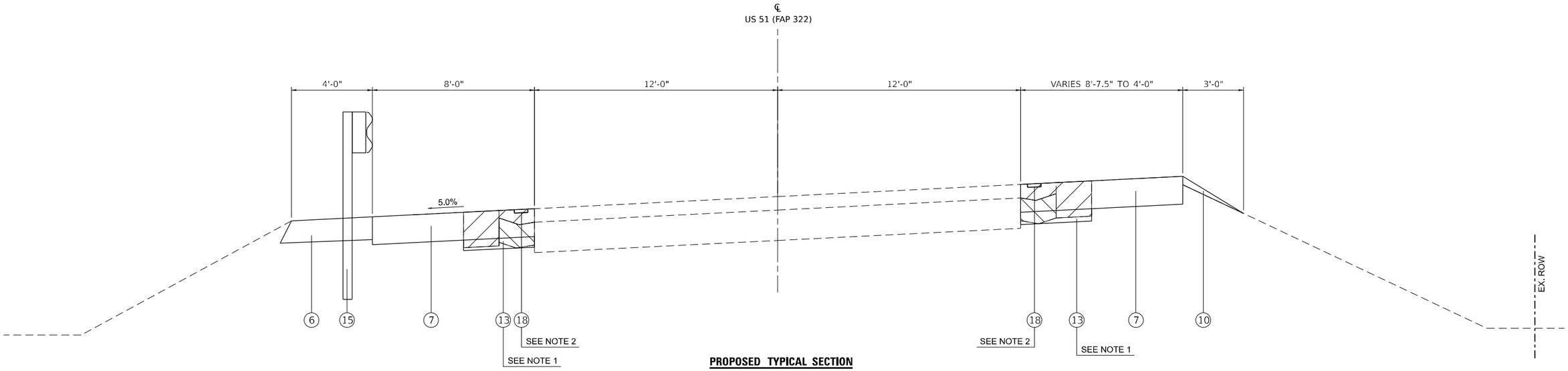

PROPOSED TYPICAL SECTION

STA. 436+12.03 RT TO STA. 437+99.21 RT
STA. 436+12.03 LT TO STA. 436+74.90 LT

NOTES:

1. USE SUBBASE GRANULAR MATERIAL, TYPE C TO FILL VOID LEFT FROM SHOULDER AND GUTTER REMOVAL.
2. CONSTRUCT AFTER STAGE 3.

TYPICAL SECTION LEGEND

- (A) EX. EMBANKMENT
- (B) EX. 8" HMA SHOULDER
- (C) EX. CONCRETE GUTTER TYPE B
- (D) EX. HMA SHOULDER
- (E) EX. HMA PAVEMENT
- (F) EX. PCC PAVEMENT
- (G) EX. GUARDRAIL
- (H) EX. GUARDRAIL

- (1) PR. EMBANKMENT
- (2) PR. HOT-MIX ASPHALT SHOULDERS, VARIABLE DEPTH (SEE CHART)
- (3) PR. HOT-MIX ASPHALT SHOULDERS, 1.5"
- (4) PR. HOT-MIX ASPHALT SHOULDERS, 1.25"
- (5) PR. HOT-MIX ASPHALT SURFACE COURSE, MIX D, N70, 1.5"
- (6) PR. HOT-MIX ASPHALT SHOULDERS, 6"
- (7) PR. PORTLAND CEMENT CONCRETE BASE COURSE, 8.25"
- (8) PR. HOT-MIX ASPHALT BINDER COURSE, IL-19.0, N70, VARIABLE DEPTH (SEE CHART)
- (9) PR. HOT-MIX ASPHALT BINDER COURSE, IL-9.5FG, N70, 1.25"
- (10) PR. AGGREGATE WEDGE SHOULDER, TYPE B
- (11) PR. HOT-MIX ASPHALT BASE COURSE, 8.75"

- (12) PR. BITUMINOUS MATERIALS (TACK COAT)
- (13) PR. SUBBASE GRANULAR MATERIAL, TYPE C
- (14) RESERVED
- (15) PR. STEEL PLATE BEAM GUARDRAIL 6 FOOT POSTS
- (16) PR. THERMOPLASTIC PAVEMENT MARKING - 4"
- (17) PR. LONGITUDINAL JOINT SEALANT
- (18) PR. SHOULDER RUMBLE STRIPS, 8"

- PAVED SHOULDER REMOVAL
- HMA SURFACE REMOVAL, VARIABLE DEPTH
- GUTTER REMOVAL
- PCC SURFACE REMOVAL, VARIABLE DEPTH

EARTHWORK SCHEDULE

LOCATION			EARTH EXCAVATION	AVERAGE SHRINKAGE FACTOR	EARTH EXCAVATION (ADJUSTED)	EMBANKMENT	EARTHWORK BALANCE		BORROW EXCAVATION	REMARKS
							EXCAVATION REQUIRED TO COMPLETE	EXCESS EXCAVATION		
STA.	TO	STA.	CU YD	%	CU YD	CU YD	CU YD	CU YD	CU YD	
US 51										
424+96.19	TO	428+99.28	95	25%	71	8242	71	-8171	8171	
431+86.72	TO	436+12.03	114	25%	86	2794	86	-2709	2709	
TOTALS			209						10879	

CHANGEABLE MESSAGE SIGN SCHEDULE

LOCATION	CHANGEABLE MESSAGE SIGN	
	CAL DAY	CAL DAY
	NB	SB
US 51		
2 WEEKS BEFORE PRE-STAGE A	14	14
SUB TOTAL	14	14
PAY TOTAL:	28	

DRAINAGE REMOVAL SCHEDULE

LOCATION				REMOVING INLETS	PIPE DRAIN REMOVAL	REMOVING INLETS (SPECIAL)	FILLING INLETS (SPECIAL)
STATION	TO	STATION	LT/RT	EACH	FOOT	EACH	EACH
PRE-STAGE A							
429+46.94	TO						1.0
431+17.62	TO						1.0
			SUB-TOTAL:	0.0	0.0	0.0	2.0
STAGE 1							
429+67.75	TO		LT		40.0		
429+68.34	TO		LT	1.0			
431+38.07	TO		LT	1.0			
431+38.95			LT		28.0		
			SUB-TOTAL:	2.0	68.0	0.0	0.0
STAGE 2							
429+46.22	TO		RT		37.0		
429+46.94	TO		RT			1.0	
431+17.30	TO		RT		46.0		
431+17.62	TO					1.0	
			SUB-TOTAL:	0.0	83.0	2.0	0.0
			PAY TOTAL:	2	151	2	2

TREE REMOVAL SCHEDULE

LOCATION				TREE REMOVAL, ACRES
STATION	TO	STATION	NOTES	ACRE
PRE-STAGE A				
424+63.66	TO	429+95.79	RT	0.32
424+63.06	TO	430+28.74	LT	0.89
431+41.14	TO	431+15.57	LT	0.11
			TOTAL:	1.5

RAISED REFLECTIVE PAVEMENT MARKER SCHEDULE

LOCATION			RAISED REFLECTIVE PAVEMENT MARKER REMOVAL
STATION	TO	STATION	EACH
STAGE 1			
424+96.19	TO	425+98.27	2
434+87.85	TO	436+12.03	2
		PAY TOTAL:	4

GUARDRAIL SCHEDULE

LOCATION				STEEL PLATE BEAM GUARDRAIL, TYPE A, 6 FOOT POSTS	TRAFFIC BARRIER TERMINAL, TYPE 6	TRAFFIC BARRIER TERMINAL, TYPE 1 (SPECIAL) TANGENT	GUARDRAIL REFLECTORS, TYPE A	TERMINAL MARKER - DIRECT APPLIED	GUARDRAIL REMOVAL
STATION	TO	STATION	LT/RT	FOOT	EACH	EACH	EACH	EACH	FOOT
STAGE 1									
427+63.28	TO	429+79.21	LT				4		215.9
428+65.68	TO	429+15.68	LT			1.0			
429+15.68	TO	429+53.18	LT		1.0			1.0	
431+26.51	TO	434+20.60	LT						294.1
431+56.58	TO	431+94.08	LT		1.0		6	1.0	
431+94.08	TO	435+94.08	LT	400.0					
435+94.08	TO	436+44.08	LT			1.0			
			SUB-TOTAL:	400.0	2.0	2.0	10.0	2.0	510.0
STAGE 2									
427+49.97	TO	429+59.16	RT				4		209.2
427+66.32	TO	428+16.32	RT			1			
428+16.32	TO	428+91.32	RT	75.0					
428+91.32	TO	429+28.82	RT		1			1	
431+02.80	TO	432+47.05	RT						144.3
431+32.82	TO	431+70.32	RT		1		4	1	
431+70.32	TO	432+20.32	RT			1			
			SUB-TOTAL:	75.0	2.0	2.0	8.0	2.0	353.5
			PAY TOTAL:	475	4	4	18	4	864

BRIDGE APPROACH PAVEMENT CONNECTOR (SPECIAL) SCHEDULE

LOCATION				BRIDGE APPROACH PAVEMENT CONNECTOR (SPECIAL)	SUBBASE GRANULAR MATERIAL, TYPE B	WELDED WIRE REINFORCEMENT
STATION	TO	STATION		SQ YD	TON	SQ YD
STAGE 1						
428+99.28	TO	429+37.37	LT	75.0	8.7	43.1
431+71.38	TO	431+86.72	LT	49.8	13.1	34.1
			SUB-TOTAL:	124.7	21.8	77.2
STAGE 2						
428+99.28	TO	429+26.00	RT	43.8	5.1	28.1
431+48.63	TO	431+86.72	RT	69.0	18.1	37.2
			SUB-TOTAL:	112.8	23.2	65.3
			PAY TOTAL:	238	45	143

EROSION CONTROL SCHEDULE

LOCATION					PERIMETER EROSION BARRIER
STATION	LT/RT	TO	STATION	LT/RT	FOOT
STAGE 1					
423+86.77	LT	TO	430+26.07	LT	747.8
430+85.35	LT	TO	436+74.90	LT	603.4
				SUB-TOTAL:	1,351
STAGE 2					
423+36.07	RT	TO	430+01.71	RT	738.7
430+61.27	RT	TO	437+99.21	RT	856.8
				SUB-TOTAL:	1,596
				PAY TOTAL:	2947

PAVEMENT MARKING SCHEDULE

LOCATION					SHORT TERM PAVEMENT MARKING (2 APPLICATIONS)	SHORT TERM PAVEMENT MARKING REMOVAL (2 APPLICATIONS)	TEMPORARY PAVEMENT MARKING - LINE 4" - PAINT (1 APPLICATION)		THERMOPLASTIC PAVEMENT MARKING - LINE 4"		PAVEMENT MARKING BLACKOUT TAPE, 5"	PAVEMENT MARKING REMOVAL - GRINDING
							YELLOW	WHITE	YELLOW	WHITE		
STATION	TO	STATION	LOCATION	TYPE	FOOT	SQ FT	FOOT	FOOT	FOOT	FOOT	FOOT	SQ FT
US 51												
421+71.62	TO	424+71.19	CENTERLINE	SOLID		124.8					299.6	
423+36.07	TO	428+99.28	SHOULDERS	SKIP-DASH	24	8.0						
423+36.07	TO	437+99.21	EDGELINE, RT	SOLID				1463.1		1463.1		487.7
423+86.77	TO	428+99.28	SHOULDERS	SKIP-DASH	24	8.0						
423+86.77	TO	436+42.75	EDGELINE, LT	SOLID				1256.0		1256.0		418.7
424+96.19	TO	436+12.03	CENTERLINE	SKIP-DASH	224	76.0						
424+96.19	TO	436+12.03	CENTERLINE	DOUBLE			2231.7		2231.7			743.9
431+86.72	TO	437+99.21	SHOULDERS	SKIP-DASH	24	8.0						
431+86.72	TO	436+74.90	SHOULDERS	SKIP-DASH	16	6.0						
436+95.22	TO	439+83.15	CENTERLINE	SOLID		120.0					287.9	
				PAY TOTAL:	312	351	2232	2719	2232	2719	588	1650
							4951		4951			

FURNISHING AND ERECTING ROW MARKERS SCHEDULE

LOCATION	FURNISHING AND ERECTING ROW MARKERS
	EACH
US 51	4
SUB TOTAL	4
PAY TOTAL:	4

MAINLINE PAVING SCHEDULE

LOCATION				SUBBASE GRANULAR MATERIAL, TYPE C	PORTLAND CEMENT CONCRETE BASE COURSE WIDENING 8.25"	HOT-MIX ASPHALT BASE COURSE, 8 3/4"	BITUMINOUS MATERIALS (TACK COAT)	TEMPORARY RAMP	HOT-MIX ASPHALT SURFACE COURSE, IL-9.5, MIX "D", N70	HOT-MIX ASPHALT BINDER COURSE, IL-9.5FG, N70	HOT-MIX ASPHALT BINDER COURSE, IL-19.0, N70	LONGITUDINAL JOINT SEALANT	HOT-MIX ASPHALT SHOULDERS, 1 1/4"	HOT-MIX ASPHALT SHOULDERS, 1 1/2"	HOT-MIX ASPHALT SHOULDERS, 6"	HOT-MIX ASPHALT SHOULDERS	SHOULDER RUMBLE STRIPS, 8 INCH	AGGREGATE WEDGE SHOULDER, TYPE B
STATION	TO	STATION	LT/RT	TON	SQ YD	SQ YD	POUND	SQ YD	TON	TON	TON	FOOT	SQ YD	SQ YD	SQ YD	TON	FOOT	TON
PRE-STAGE A																		
423+36.07	TO	425+98.27	RT	23.8														
423+36.07	TO	429+44.05	RT		541.0													
425+98.27	TO	428+99.28	RT	32.4														
431+19.66	TO	437+99.21	RT		643.2													
431+86.72	TO	436+12.03	RT	45.8														
436+12.03	TO	437+99.21	RT	17.0														
			SUB-TOTAL:	119.0	1184.2	0.0	0.0	0.0	0.0	0.0	0.0	0.0	0.0	0.0	0.0	0.0	0.0	0.0
STAGE 1																		
423+86.72	TO	424+96.19	LT	9.9	68.9													
424+96.19	TO	425+01.19	LT					6.7										
424+96.19	TO	425+98.27	LT	4.6						16.0								
424+96.19	TO	428+99.28	LT			380.7	433.2											
425+98.27	TO	428+99.28	LT								391.1							
428+94.28	TO	428+99.28	LT					6.7										
428+32.29	TO	428+53.18	LT												48.0			
431+57.18	TO	436+74.90	LT												222.5			
431+86.72	TO	431+91.72	LT					6.7										
431+86.72	TO	436+12.03	LT			401.7	525.7											
431+86.72	TO	434+87.85	LT								457.6							
434+87.85	TO	436+12.03	LT							19.4								
436+07.03	TO	436+12.03	LT					6.7										
436+12.03	TO	436+74.90	LT	5.7	36.9													
			SUB-TOTAL:	20.2	105.7	782.4	958.9	26.7	0.0	35.4	848.7	0.0	0.0	0.0	270.5	0.0	0.0	0.0
STAGE 2																		
424+96.19	TO	425+01.19	RT					6.7										
424+96.19	TO	425+98.28	RT				40.8			9.6			90.7					
424+96.19	TO	428+99.28	RT				392.4									131.0		
425+98.27	TO	428+99.28	RT								211.7							
427+32.93	TO	428+28.82	RT												82.8			
428+94.28	TO	428+99.28	RT					6.7										
431+32.82	TO	432+50.20	RT												48.0			
431+86.72	TO	431+91.72	RT					6.7										
431+86.72	TO	436+12.03	RT				476.0									179.4		
431+86.72	TO	434+86.72	RT								264.1							
434+87.85	TO	436+12.03	RT				49.7			11.7			110.4					
436+07.03	TO	436+12.03	RT					6.7										
			SUB-TOTAL:	0.0	0.0	0.0	958.9	26.7	0.0	21.3	475.8	0.0	201.1	0.0	130.8	310.4	0.0	0.0
STAGE 3																		
423+36.07	TO	428+99.28	RT														563.2	8.1
423+86.72	TO	428+99.28	LT														512.6	9.1
424+96.19	TO	427+32.93	RT															
424+96.19	TO	428+32.39	LT															
424+96.19	TO	428+99.28	LT/RT				241.9		90.8			403.1						
424+96.19	TO	428+99.28	RT				80.6							358.3				
424+96.19	TO	428+99.28	LT				80.6							358.3				
431+86.72	TO	436+12.03	LT/RT				510.4		95.8			425.3						
431+86.72	TO	436+12.03	RT				85.1							378.1				
431+86.72	TO	436+12.03	LT				85.1							378.1				
431+86.72	TO	436+74.90	LT														488.2	
431+86.72	TO	437+99.21	RT														612.5	
432+53.68	TO	437+99.21	RT															11.2
			SUB-TOTAL:	0.0	0.0	0.0	1083.6	0.0	186.5	0.0	0.0	828.4	0.0	1472.7	0.0	0.0	2176.5	28.4
			PAY TOTAL:	139	1290	782	3001	53	187	57	1325	828	201	1473	401	310	2177	28

SEEDING SCHEDULE

LOCATION				SEEDING, CLASS 2A	SEEDING, CLASS 7	NITROGEN FERTILIZER NUTRIENT	PHOSPHORUS FERTILIZER NUTRIENT	POTASSIUM FERTILIZER NUTRIENT	AGRICULTURAL GROUND LIMESTONE	EROSION CONTROL BLANKET	TEMPORARY EROSION CONTROL SEEDING
											2 APPLICATIONS
STATION	TO	STATION	LT/RT	ACRE	ACRE	POUND	POUND	POUND	TON	SQ YD	POUND
STAGE 1											
423+86.73	TO	430+26.07	LT	0.979	0.979	88.1	88.1	88.1	2.0	4740.0	195.8
430+85.23	TO	436+74.90	LT	0.450	0.450	40.5	40.5	40.5	1.2	2176.5	90.0
			SUB TOTAL:	1.43	1.43	128.60	128.60	128.60	3.20	6916.50	285.80
STAGE 2											
423+36.07	TO	430+01.71	RT	0.780	0.780	70.2	70.2	70.2	1.6	3777.1	156.0
430+61.27	TO	437+99.21	RT	0.575	0.575	51.8	51.8	51.8	0.9	2780.7	115.0
			SUB TOTAL:	1.36	1.36	122.00	122.00	122.00	2.50	6557.80	271.00
			PAY TOTAL:	2.75	2.75	248	248	248	6	13474	557

RIPRAP SCHEDULE

LOCATION		STONE RIPRAP, CLASS A4	FILTER FABRIC
STATION		SQ YD	SQ YD
STAGE 1			
428+99.28	LT	81.3	81.3
431+86.72	LT	45.9	45.9
	SUB-TOTAL:	127.1	127.1
STAGE 2			
428+99.28	RT	69.5	69.5
431+86.72	RT	59.6	59.6
	SUB-TOTAL:	129.1	129.1
	PAY TOTAL:	256	256

TRAFFIC CONTROL SCHEDULE

LOCATION					TEMPORARY BRIDGE TRAFFIC SIGNALS	TEMPORARY RUMBLE STRIPS	TEMPORARY CONCRETE BARRIER	PINNING TEMPORARY CONCRETE BARRIER	RELOCATE TEMPORARY CONCRETE BARRIER	IMPACT ATTENUATORS, TEMPORARY (NON-REDIRECTIVE NARROW), TEST LEVEL 3	IMPACT ATTENUATORS, RELOCATE (NON-REDIRECTIVE NARROW), TEST LEVEL 3	BARRIER WALL REFLECTORS, TYPE C
LOCATION	LT/RT	TO	LOCATION	LT/RT	EACH	EACH	FOOT	EACH	FOOT	EACH	EACH	EACH
STAGE 1												
423+08.07	LT	TO	437+94.07	LT	0.5	3	1487.5	90 *				120
423+08.07	LT									1		
429+53.18	LT	TO	431+57.18	LT								8
437+94.07	LT									1		
				SUB-TOTAL:	0.5	3	1487.5	90 *	0	2	0	128
STAGE 2												
423+07.00	RT	TO	437+11.20	RT	0.5	3		249	1400			57
423+07.00	RT										1	
429+28.82	RT	TO	43132.82									8
437+11.20	RT										1	
				SUB-TOTAL:	0.5	3	0	249	1400	0	2	65
				PAY TOTAL:	1	6	1488	339	1400	2	2	193

* STA. 428+71.19 TO STA. 432+21.19

SIGNAGE SCHEDULE

LOCATION			DESCRIPTION	WOOD SIGN SUPPORT
STATION	OFFSET	LT/RT	SIGN	FOOT
US 51				
428+00.00	26.0'	RT	W1-2	16.5
428+00.00	26.0'	LT	W1-2	17.5
			SUB-TOTAL:	34
			PAY TOTAL:	34

HIGH VISIBILITY TEMPORARY FENCING SCHEDULE

LOCATION			HIGH VISIBILITY TEMPORARY FENCING
STATION	TO	STATION	FOOT
PRE-STAGE A			
432+08.47	TO	436+12.70	397
		PAY TOTAL:	397

REMOVAL SCHEDULE

LOCATION				PAVEMENT REMOVAL	PAVED SHOULDER REMOVAL	GUTTER REMOVAL	COMBINATION CURB AND GUTTER REMOVAL	PARTIAL DEPTH REMOVAL, TYPE II, VARIABLE DEPTH	HOT-MIX ASPHALT SURFACE REMOVAL - BUTT JOINT	PORTLAND CEMENT CONCRETE SURFACE REMOVAL - BUTT JOINT	HOT-MIX ASPHALT SURFACE REMOVAL, VARIABLE DEPTH	PORTLAND CEMENT CONCRETE SURFACE REMOVAL (VARIABLE DEPTH)
STATION	TO	STATION	LT/RT	SQ YD	SQ YD	FOOT	FOOT	SQ YD	SQ YD	SQ YD	SQ YD	SQ YD
PRE-STAGE A												
423+36.07	TO	429+44.05	RT			608.0						
423+36.07	TO	429+44.05	RT		280.9							
431+19.66	TO	437+99.21	RT			679.5						
431+19.66	TO	437+99.21	RT		313.9							
			SUB-TOTAL:	0.0	594.7	1287.5	0.0	0.0	0.0	0.0	0.0	0.0
STAGE 1												
423+86.77	TO	429+76.52	LT		264.4							
423+86.77	TO	425+98.27	LT			211.5						
424+96.19	TO	425+06.19	LT						14.7			
424+96.19	TO	425+98.27	LT								152.1	
429+21.98	TO	429+33.48	LT					26.8				
429+40.68	TO	429+67.92	LT	40.4								
431+16.38	TO	431+44.18	LT	40.2								
431+26.34	TO	436+56.19	LT		233.1							
431+51.38	TO	431+62.89	LT					26.8				
434+87.85	TO	436+12.03	LT								189.8	
436+02.03	TO	436+12.03	LT						15.2			
436+12.03	TO	436+74.90	LT			62.9						
436+57.70	TO	436+74.90	LT				17.7					
			SUB-TOTAL:	80.6	497.6	274.4	17.7	53.7	29.9	0.0	341.8	0.0
STAGE 2												
424+96.19	TO	425+06.19	RT						13.2	9.8		
424+96.19	TO	429+40.68	RT	49.4								
424+96.19	TO	425+98.27	RT								121.6	101.0
429+21.98	TO	429+33.48	RT					23.0				
429+30.50	TO	429+57.32	RT		17.9							
429+40.68	TO	429+67.92	RT	35.0								
431+06.94	TO	431+33.91	RT		18.5							
431+16.38	TO	431+44.18	RT	35.5								
431+44.18	TO	436+12.03	RT	52.0								
431+51.38	TO	431+62.89	RT					23.0				
434+87.85	TO	436+12.03	RT								142.3	119.6
436+02.03	TO	436+12.03	RT						12.7	10.3		
			SUB-TOTAL:	171.9	36.4	0.0	0.0	46.0	25.9	20.1	264.0	220.5
			PAY TOTAL:	252	1129	1562	18	100	56	20	606	221

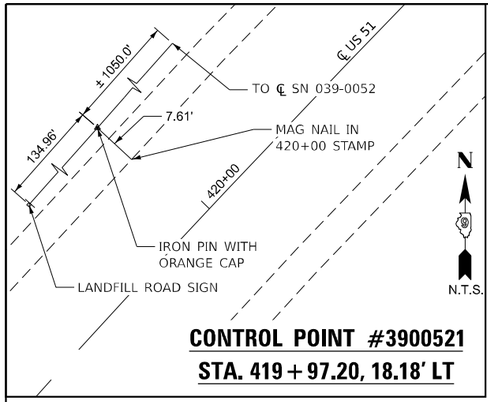

CONTROL POINT #3900521
STA. 419 + 97.20, 18.18' LT

EX CURVE
PI STA = 414+46.40
Δ = 61°18'45" (RT)
D = 02°41'57"
R = 2,122.78'
T = 1,258.22'
L = 2271.59'
E = 344.87'
e = 5.0%
PC STA = 401+88.17
PT STA = 424+61.44

PI STA 414+46.40

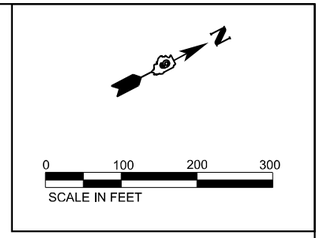

TBM 3900521

EX. ℄ US 51

BEGIN IMPROVEMENTS
STA. 424+96.19

PT STA 424+61.44

PC STA 401+88.17

EQN: STA 424+59.77 BK =
STA 424+61.44 AH

MATCHLINE STA. 427+00.00

EXISTING BENCHMARKS

NUMBER	DESCRIPTION	NORTHING	EASTING	ELEVATION
39-0052	EXISTING " ▭ " CUT ON TOP OF NW WINGWALL OF OF SN 039-0052	432982.012	724796.129	441.746

CENTERLINE CONTROL POINTS US 51

POINT	STATION	NORTHING	EASTING
PC	401+88.17	430710.127	723468.276
PI	414+46.40	431962.076	723342.765
PT	424+59.77	432673.157	724380.789
PC	432+50.44	433119.055	725031.703
PI	450+09.28	434113.058	726482.730
PT	461+70.29	435708.916	725743.298

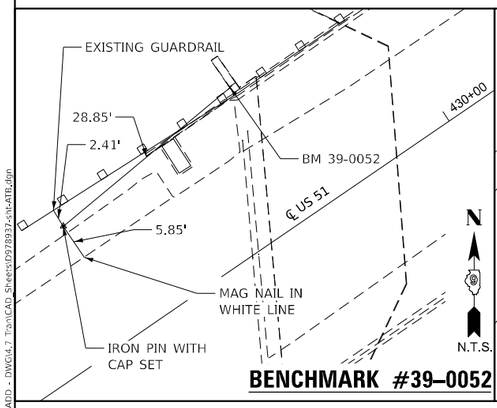

BENCHMARK #39–0052

CONTROL POINT #3900523
STA. 436 + 10.62, 18.66' RT

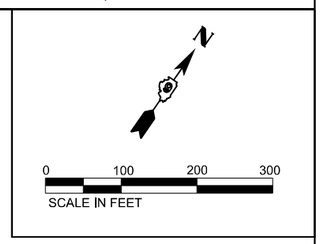

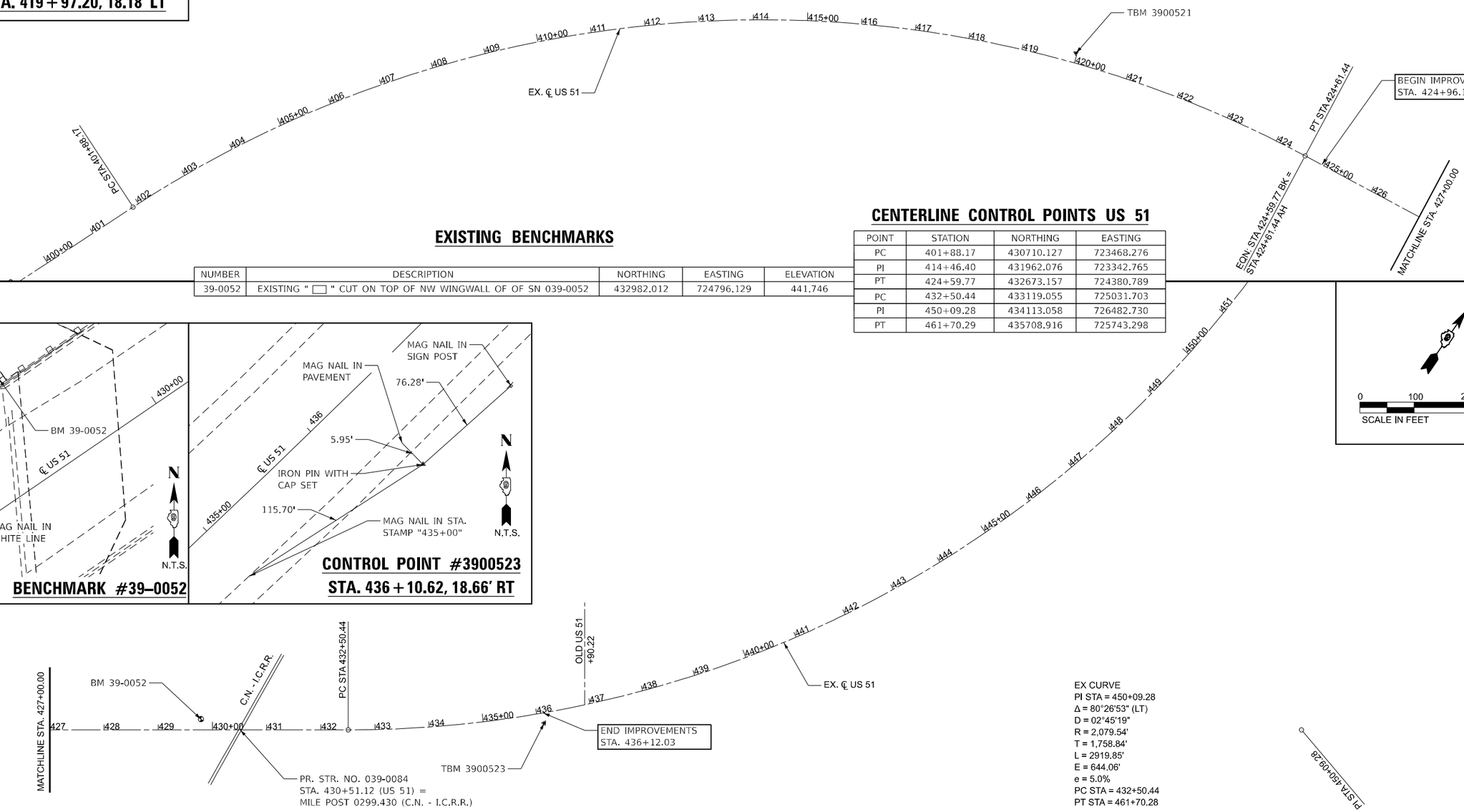

EX CURVE
PI STA = 450+09.28
Δ = 80°26'53" (LT)
D = 02°45'19"
R = 2,079.54'
T = 1,758.84'
L = 2919.85'
E = 644.06'
e = 5.0%
PC STA = 432+50.44
PT STA = 461+70.28

MODEL: Default
FILE NAME: P:\2022\2019\A - US 51 over ICRR Bridge Replacement (Phase II)\4 CADD - DWG\4.7 Topo\CAD Sheets\0978937-cnt-ATB.dgn

TWM ENGINEERING GEOSPATIAL SERVICES — TWM, INC. WWW.TWM-INC.COM — IL DESIGN FIRM LICENSE NO: 184-001220	USER NAME = bbilthartz	DESIGNED - TBP	REVISED -	STATE OF ILLINOIS DEPARTMENT OF TRANSPORTATION
		DRAWN - BAB	REVISED -	
	PLOT SCALE = 200.000 ' / in.	CHECKED - SJK	REVISED -	
	PLOT DATE = 8/21/2025	DATE - 5/2025	REVISED -	

ALIGNMENTS, TIES, AND BENCHMARKS
US 51

SCALE: 1"=100' | SHEET 1 OF 1 SHEETS | STA. | TO STA.

F.A.P. RTE.	SECTION	COUNTY	TOTAL SHEETS	SHEET NO.
322	3VB-3	JACKSON	124	32

CONTRACT NO. 78937

ILLINOIS | FED. AID PROJECT

10-05-400-020

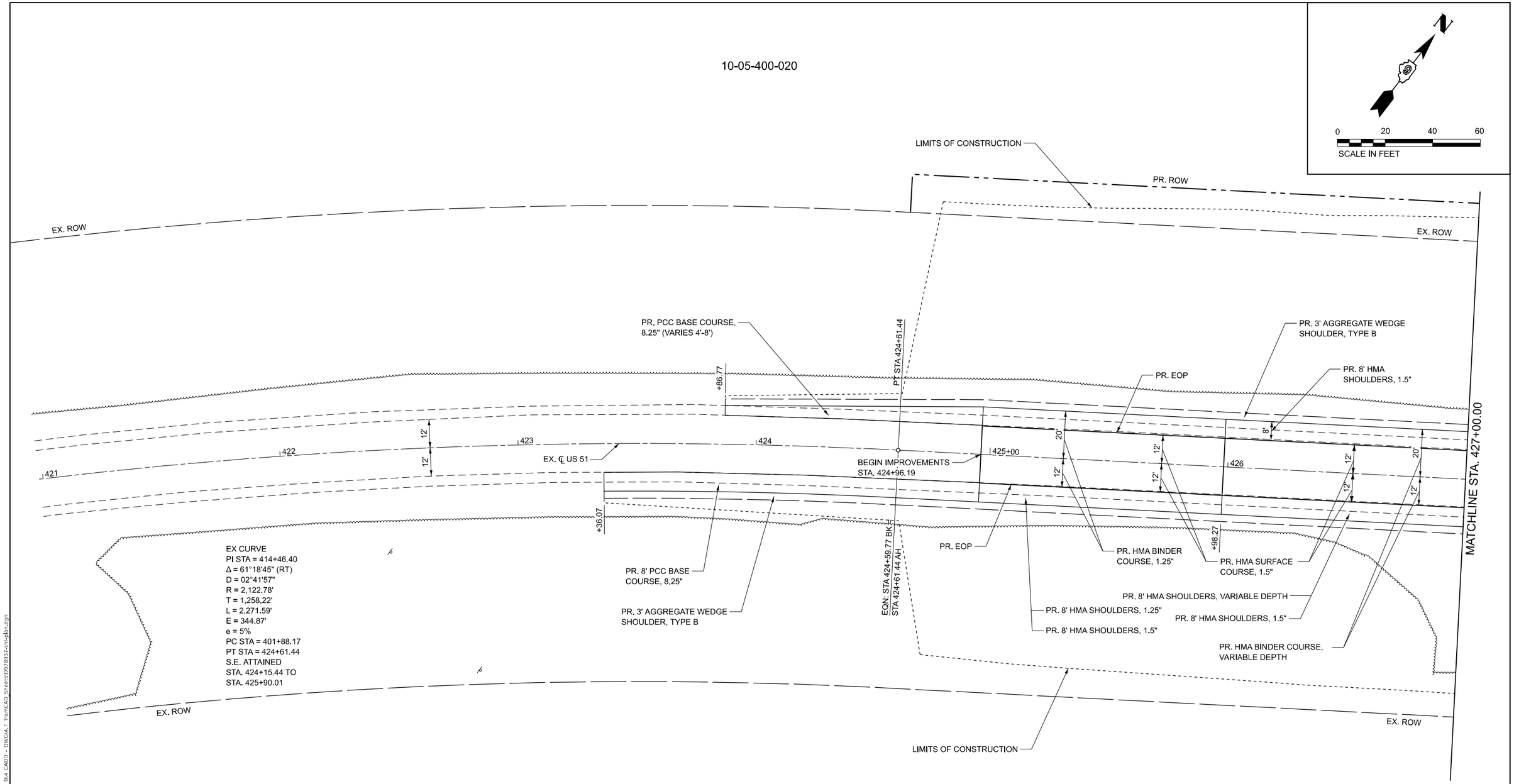

MODEL: Ex_US51 - Plan - US 51
FILE NAME: P:\D22220197A - US 51 over ICRR Bridge Replacement (Phase 1)\4 CADD - DWG\4.7 Train\CAD_Sheets\0978937-sht-plan.dgn

TWM ENGINEERING GEOSPATIAL SERVICES	TWM, INC. WWW.TWM-INC.COM IL DESIGN FIRM LICENSE NO: 184-001220	USER NAME = bbillhartz	DESIGNED - TBP	REVISED -	STATE OF ILLINOIS DEPARTMENT OF TRANSPORTATION	PLAN US 51	F.A.P. RTE.	SECTION	COUNTY	TOTAL SHEETS	SHEET NO.
			DRAWN - BAB	REVISED -			322	3VB-3	JACKSON	124	33
		PLOT SCALE = 40.00000000 ' / in.	CHECKED - SJK	REVISED -			CONTRACT NO. 78937				
		PLOT DATE = 8/21/2025	DATE - 5/2025	REVISED -		SCALE: 1"=20' SHEET 1 OF 6 SHEETS STA. 423+36.07 TO STA. 427+00.00	ILLINOIS FED. AID PROJECT				

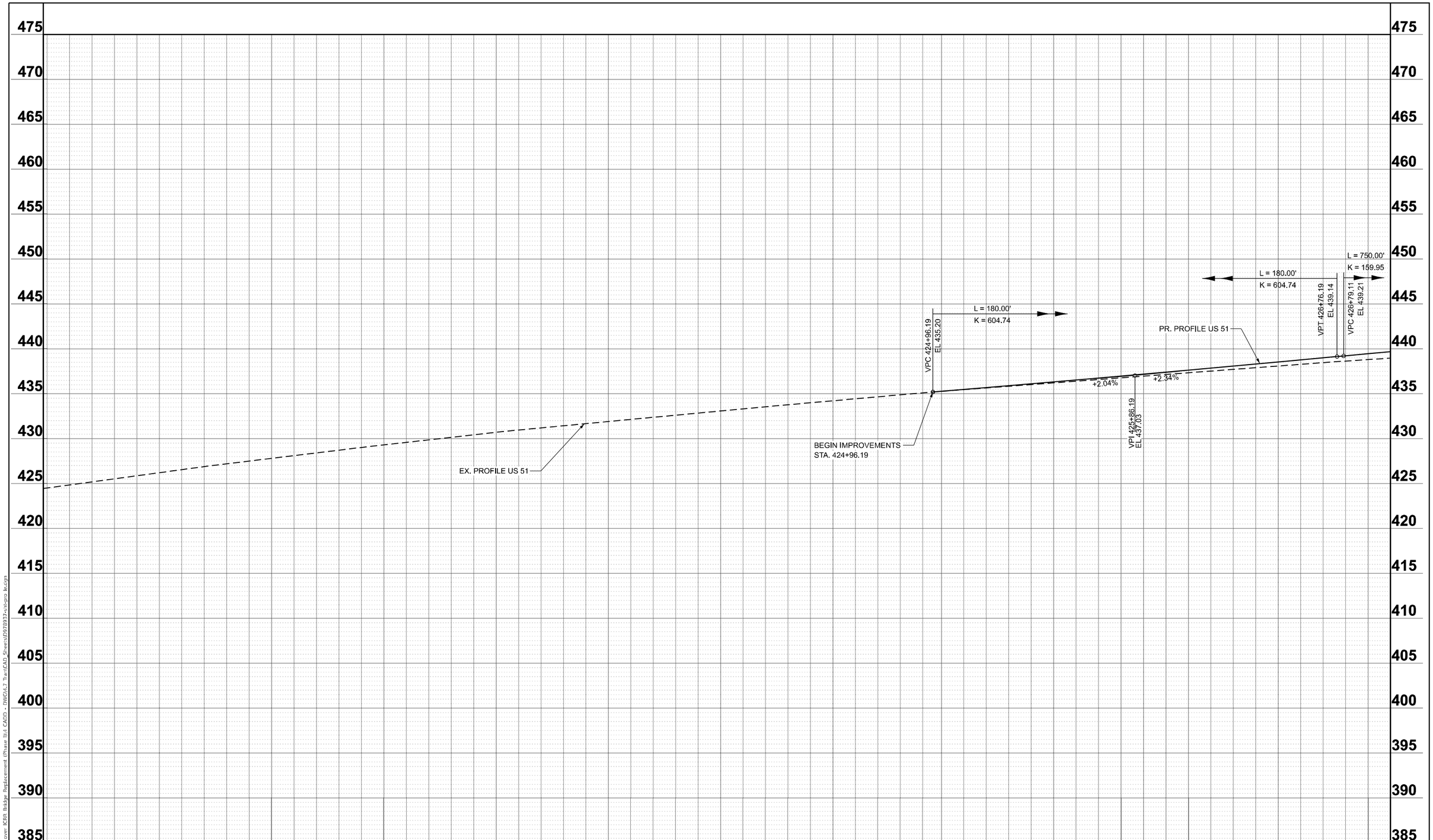

MODEL: Pro le US51
FILE NAME: P:\2022\20197A - US 51 over ICRR Bridge Replacement (Phase II)\ CADD - DWG\4.7 Tran\CAD_Sheets\D978937-sht-pro le.dgn

TWM ENGINEERING & GEOSPATIAL SERVICES	TWM, INC. WWW.TWM-INC.COM IL DESIGN FIRM LICENSE NO: 184-001220	USER NAME = bbillhartz	DESIGNED - TBP	REVISED -	STATE OF ILLINOIS DEPARTMENT OF TRANSPORTATION	PROFILE US 51	F.A.P. RTE.	SECTION	COUNTY	TOTAL SHEETS	SHEET NO.
			DRAWN - BAB	REVISED -			322	3VB-3	JACKSON	124	34
		PLOT SCALE = 40.00000000 ' / in.	CHECKED - SJK	REVISED -			CONTRACT NO. 78937				
		PLOT DATE = 8/21/2025	DATE - 5/2025	REVISED -		SCALE: 1"=20' SHEET 2 OF 6 SHEETS STA. 423+00.00 TO STA. 427+00.00	ILLINOIS	FED. AID PROJECT			

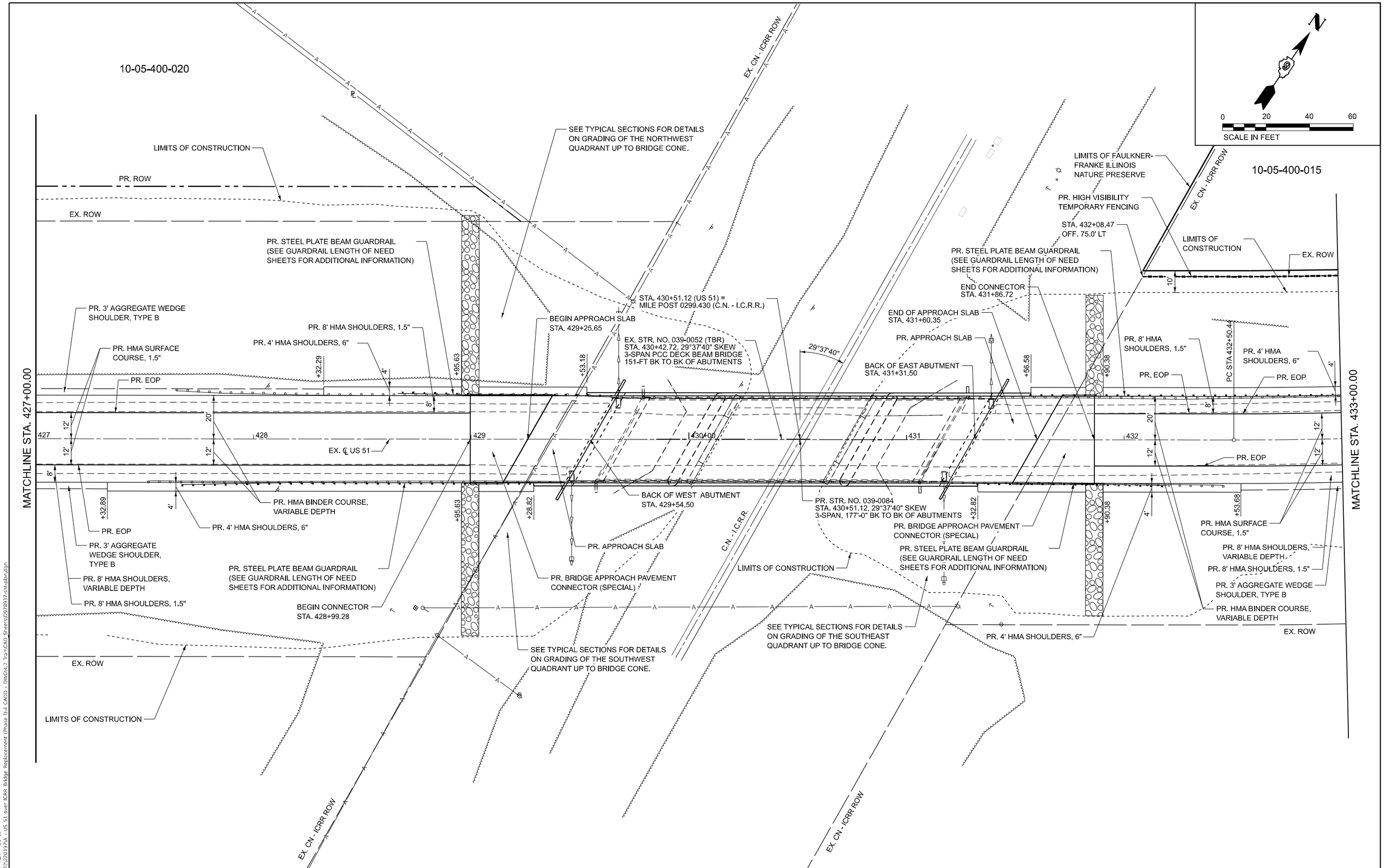

MODEL: Ex_US51 - Plan - US 52
FILE NAME: P:\2022\22019TA - US 51 over ICRR Bridge Replacement (Phase II)\4 CADD - DWG\4.7 Tran\CAD Sheets\078937-sht-plan.dgn

TWM ENGINEERING GEOSPATIAL SERVICES	TWM, INC. WWW.TWM-INC.COM IL DESIGN FIRM LICENSE NO: 184-001220	USER NAME = bbillhartz	DESIGNED - TBP	REVISED -	STATE OF ILLINOIS DEPARTMENT OF TRANSPORTATION	PLAN US 51			F.A.P. RTE.	SECTION	COUNTY	TOTAL SHEETS / SHEET NO.
			DRAWN - BAB	REVISED -					322	3VB-3	JACKSON	124 / 35
		PLOT SCALE = 40.00000000 ' / in.	CHECKED - SJK	REVISED -							CONTRACT NO. 78937	
		PLOT DATE = 8/21/2025	DATE - 5/2025	REVISED -		SCALE: 1"=20'	SHEET 3 OF 6 SHEETS	STA. 427+00.00 TO STA. 433+00.00			ILLINOIS FED. AID PROJECT	

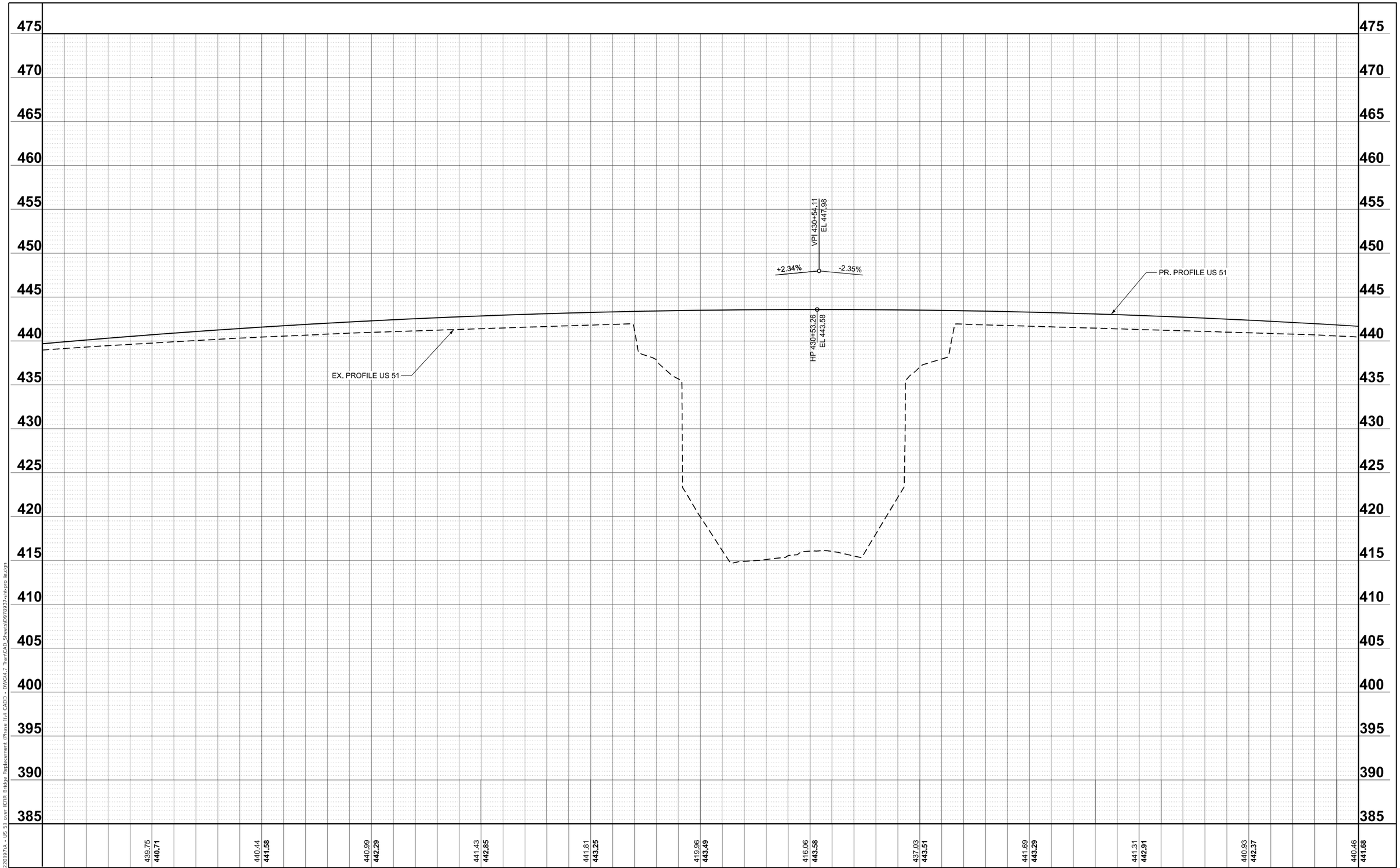

MODEL: Pro le US52
FILE NAME: P:\2022\20197A - US 51 over ICRR Bridge Replacement (Phase II)\4 CADD - DWG\4.7 Train\CAD_Sheets\D978937-sht-pro le.dgn

TWM ENGINEERING & GEOSPATIAL SERVICES	TWM, INC. WWW.TWM-INC.COM IL DESIGN FIRM LICENSE NO: 184-001220	USER NAME = bbillhartz	DESIGNED - TBP	REVISED -	STATE OF ILLINOIS DEPARTMENT OF TRANSPORTATION	PROFILE US 51	F.A.P. RTE. 322	SECTION 3VB-3	COUNTY JACKSON	TOTAL SHEETS 124	SHEET NO. 36
			DRAWN - BAB	REVISED -					CONTRACT NO. 78937		
		PLOT SCALE = 40.00000000 ' / in.	CHECKED - SJK	REVISED -							
		PLOT DATE = 8/21/2025	DATE - 5/2025	REVISED -		SCALE: 1"=20' SHEET 3 OF 6 SHEETS STA. 427+00.00 TO STA. 433+00.00			ILLINOIS FED. AID PROJECT		

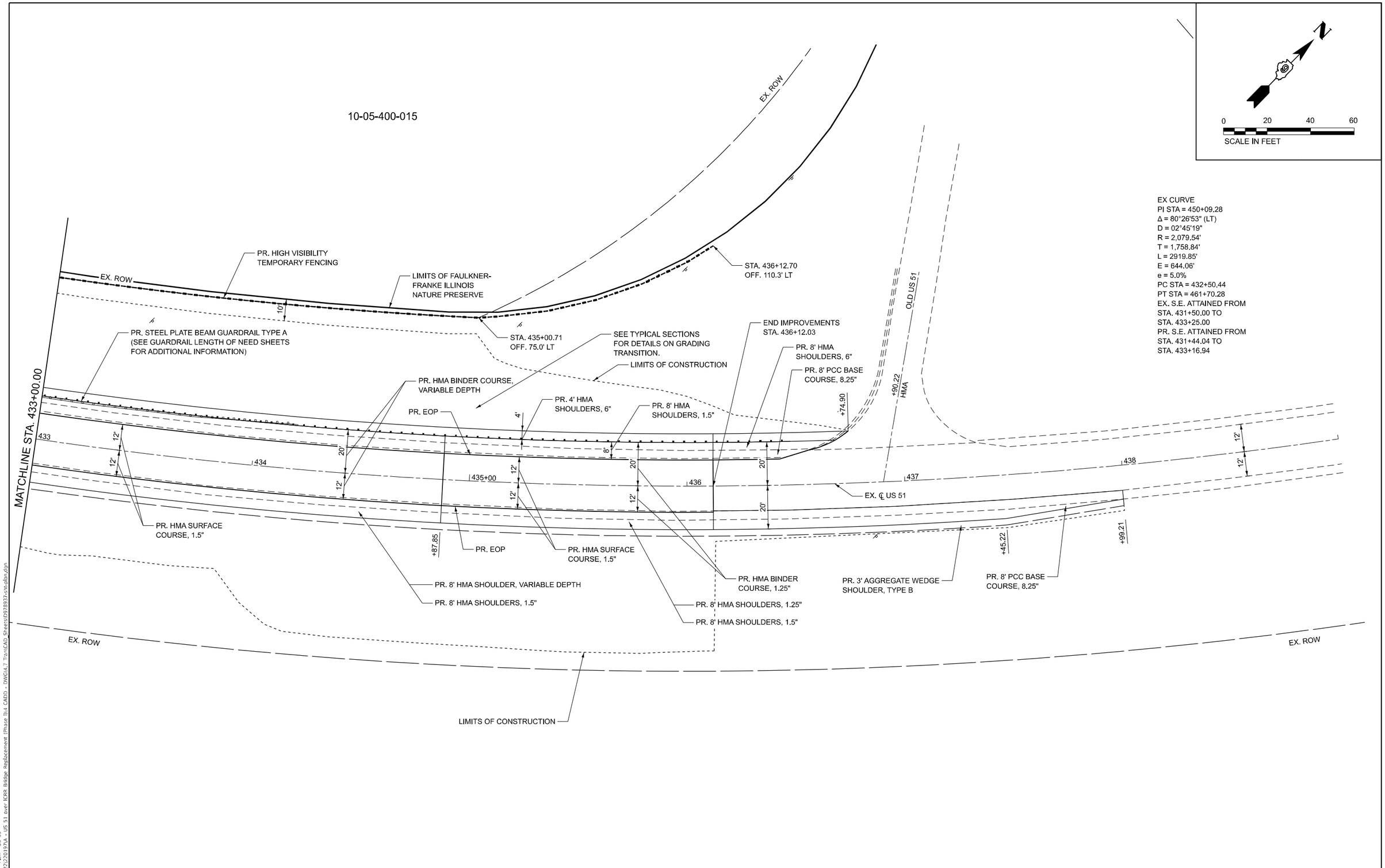

MODEL: Ex_US51 - Plan - US 53
FILE NAME: P:\2022\2019TA - US 51 over ICRR Bridge Replacement (Phase 1)\4 CADD - DWG\4.7 Train\CAD Sheets\0978937-sht-plan.dgn

TWM ENGINEERING GEOSPATIAL SERVICES	TWM, INC. WWW.TWM-INC.COM IL DESIGN FIRM LICENSE NO: 184-001220	USER NAME = bbillhartz	DESIGNED - TBP	REVISED -	STATE OF ILLINOIS DEPARTMENT OF TRANSPORTATION	US ROUTE 51 PLAN	F.A.P. RTE.	SECTION	COUNTY	TOTAL SHEETS	SHEET NO.
			DRAWN - BAB	REVISED -			322	3VB-3	JACKSON	124	37
		PLOT SCALE = 40.000000 ' / in.	CHECKED - SJK	REVISED -					CONTRACT NO. 78937		
		PLOT DATE = 8/21/2025	DATE - 5/2025	REVISED -		SCALE: 1"=20' SHEET 5 OF 6 SHEETS STA. 433+00.00 TO STA. 439+00.00			ILLINOIS FED. AID PROJECT		

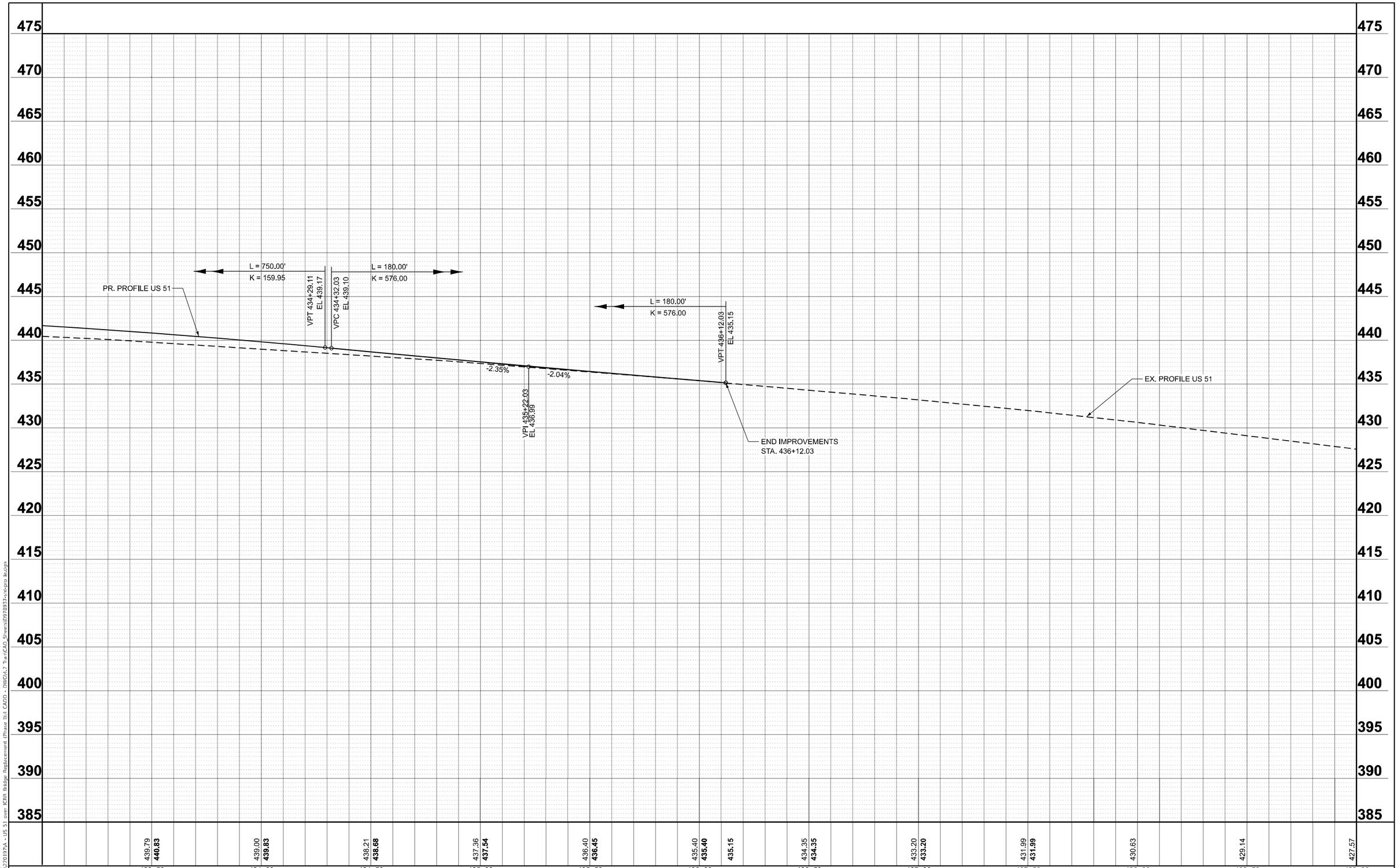

MODEL: Pro le US53
FILE NAME: P:\2022\20197LA - US 51 over ICRR Bridge Replacement (Phase II)\4 CADD - DWG\4.7 Tran\CAD_Sheets\D978937-sht-pro le.dgn

TWM ENGINEERING & GEOSPATIAL SERVICES	TWM, INC. WWW.TWM-INC.COM IL DESIGN FIRM LICENSE NO: 184-001220	USER NAME = bbillhartz	DESIGNED - TBP	REVISED -	STATE OF ILLINOIS DEPARTMENT OF TRANSPORTATION	PROFILE US 51	F.A.P. RTE. 322	SECTION 3VB-3	COUNTY JACKSON	TOTAL SHEETS 124	SHEET NO. 38
			DRAWN - BAB	REVISED -					CONTRACT NO. 78937		
		PLOT SCALE = 40.00000000 ' / in.	CHECKED - SJK	REVISED -							
		PLOT DATE = 8/21/2025	DATE - 5/2025	REVISED -		SCALE: 1"=20' SHEET 6 OF 6 SHEETS STA. 433+00.00 TO STA. 439+00.00			ILLINOIS FED. AID PROJECT		

SUGGESTED STAGE CONSTRUCTION SEQUENCE FOR CONSTRUCTION PRE-STAGE A

SHOULDER WIDENING

1. SEE PRE-STAGE A TYPICAL SECTION.
2. TRAFFIC CONTROL VIA HIGHWAY STANDARDS. SEE PRE-STAGE A - STAGING PLAN.
3. INSTALL HIGH VISIBILITY TEMPORARY FENCING.
4. REMOVE EXISTING TREES, PAVED SHOULDERS, AND CONCRETE GUTTER.
5. WIDEN NB US 51 ACCORDING TO PRE-STAGE A DETAILS USING PCC BASE COURSE.
6. FILL EXISTING INLETS ACCORDING TO PRE-STAGE A DETAILS.

SUGGESTED STAGE CONSTRUCTION SEQUENCE FOR CONSTRUCTION STAGE 1

ROADWAY GRADE RAISE AND BRIDGE CONSTRUCTION (LEFT SIDE)

1. ERECT WIDTH RESTRICTION SIGNING.
2. ERECT WORK ZONE TRAFFIC CONTROL FOR STAGE 1.
3. REMOVE EXISTING PAVEMENT, PAVED SHOULDERS, CONCRETE GUTTER, GUARDRAIL, INLETS, AND PIPE DRAINS.
4. REMOVE LEFT SECTION OF EX. SN 039-0052 (SEE STRUCTURE PLANS).
5. CONSTRUCT HMA BASE COURSE, HMA BINDER COURSE, AND HMA SHOULDERS.
6. CONSTRUCT LEFT SECTION OF PR. SN 039-0084 (SEE BRIDGE PLANS).
7. INSTALL GUARDRAIL ON LEFT SIDE OF US 51.
8. FINAL GRADING AND ITEMS RELATED TO RIPRAP AND PERMANENT SEEDING ON THE LEFT HALF OF THE ROADWAY.
9. TRANSITION TO STAGE 2 TRAFFIC CONTROL.

SUGGESTED STAGE CONSTRUCTION SEQUENCE FOR CONSTRUCTION STAGE 2

ROADWAY GRADE RAISE AND BRIDGE CONSTRUCTION (RIGHT SIDE)

1. KEEP WIDTH RESTRICTION SIGNING.
2. ERECT WORK ZONE TRAFFIC CONTROL FOR STAGE 2.
3. REMOVE GUARDRAIL, INLETS, AND PIPE DRAINS.
4. REMOVE RIGHT SECTION OF EX. SN 039-0052 (SEE STRUCTURE PLANS).
5. CONSTRUCT HMA BASE COURSE, HMA BINDER COURSE, AND HMA SHOULDERS.
6. CONSTRUCT RIGHT SECTION OF PR. SN 039-0084 (SEE BRIDGE PLANS).
7. INSTALL GUARDRAIL ON RIGHT SIDE OF US 51.
8. FINAL GRADING AND ITEMS RELATED TO RIPRAP AND PERMANENT SEEDING ON THE RIGHT HALF OF THE ROADWAY.
9. REMOVE TRAFFIC CONTROL RELATED TO STAGE 2.

SUGGESTED STAGE CONSTRUCTION SEQUENCE FOR CONSTRUCTION STAGE 3

PLACEMENT OF HMA SURFACE COURSE

1. SEE STAGE 3 - STAGING TYPICAL SECTION.
2. TRAFFIC CONTROL VIA HIGHWAY STANDARDS.
3. PLACE HMA SURFACE COURSE AND HMA SHOULDERS. (TOP LIFT)
4. PLACE AGGREGATE WEDGE SHOULDERS.
5. PLACE FINAL PAVEMENT MARKINGS.
6. CONSTRUCT SHOULDER RUMBLE STRIPS.
7. REMOVE HIGH VISIBILITY TEMPORARY FENCING.

NOTES

1. STAGE TYPICAL IS GENERIC.
2. SEE PROPOSED TYPICAL SECTIONS FOR CONSTRUCTION DETAILS.
3. OVERNIGHT DROP-OFFS LOCATED WITHIN 8 FT OF AN OPEN LANE OF TRAFFIC SHALL NOT BE GREATER THAN 12".

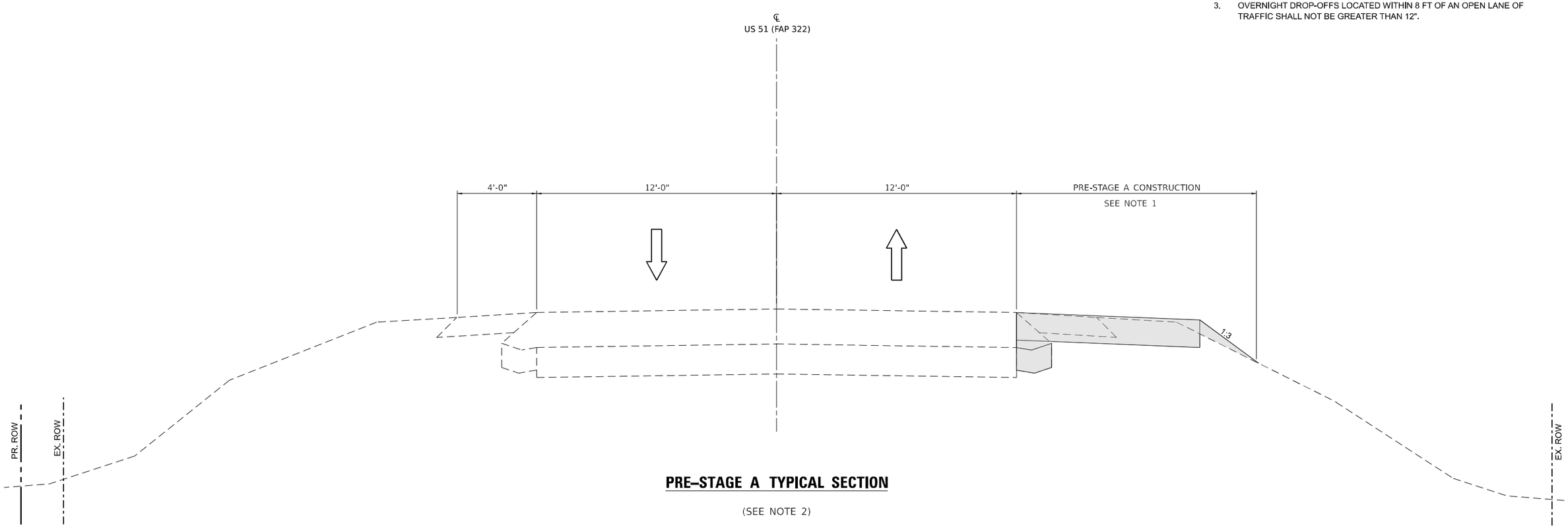

PRE–STAGE A TYPICAL SECTION

(SEE NOTE 2)

STAGE CONSTRUCTION LEGEND

① PR. TEMPORARY CONCRETE BARRIER
② PR. TEMPORARY CONCRETE BARRIER (PINNED)
③ PR. TEMPORARY PAVEMENT MARKING TAPE, TYPE IV, 4"

WORK COMPLETED DURING STAGE CONSTRUCTION (SEE NOTES)

MODEL: Default
FILE NAME: P:\0222\20197A - US 51 over ICRR Bridge Replacement (Phase 1)\4 CADD - DWG\4.7 Trans\CAD Sheets\0978937-sht-typical-staging.dgn

TWM ENGINEERING GEOSPATIAL SERVICES	TWM, INC. WWW.TWM-INC.COM IL DESIGN FIRM LICENSE NO: 184-001220	USER NAME = bbillhartz	DESIGNED - TBP	REVISED -	STATE OF ILLINOIS DEPARTMENT OF TRANSPORTATION
			DRAWN - BAB	REVISED -	
		PLOT SCALE = 5.000 ' / in.	CHECKED - SJK	REVISED -	
		PLOT DATE = 8/21/2025	DATE - 5/2025	REVISED -	

PRE–STAGE A – STAGING TYPICAL SECTION
US 51

SCALE: N.T.S. | SHEET 1 OF 1 SHEETS | STA. | TO STA.

F.A.P. RTE.	SECTION	COUNTY	TOTAL SHEETS	SHEET NO.
322	3VB-3	JACKSON	124	40
		CONTRACT NO. 78937		
		ILLINOIS	FED. AID PROJECT	

10-05-400-020

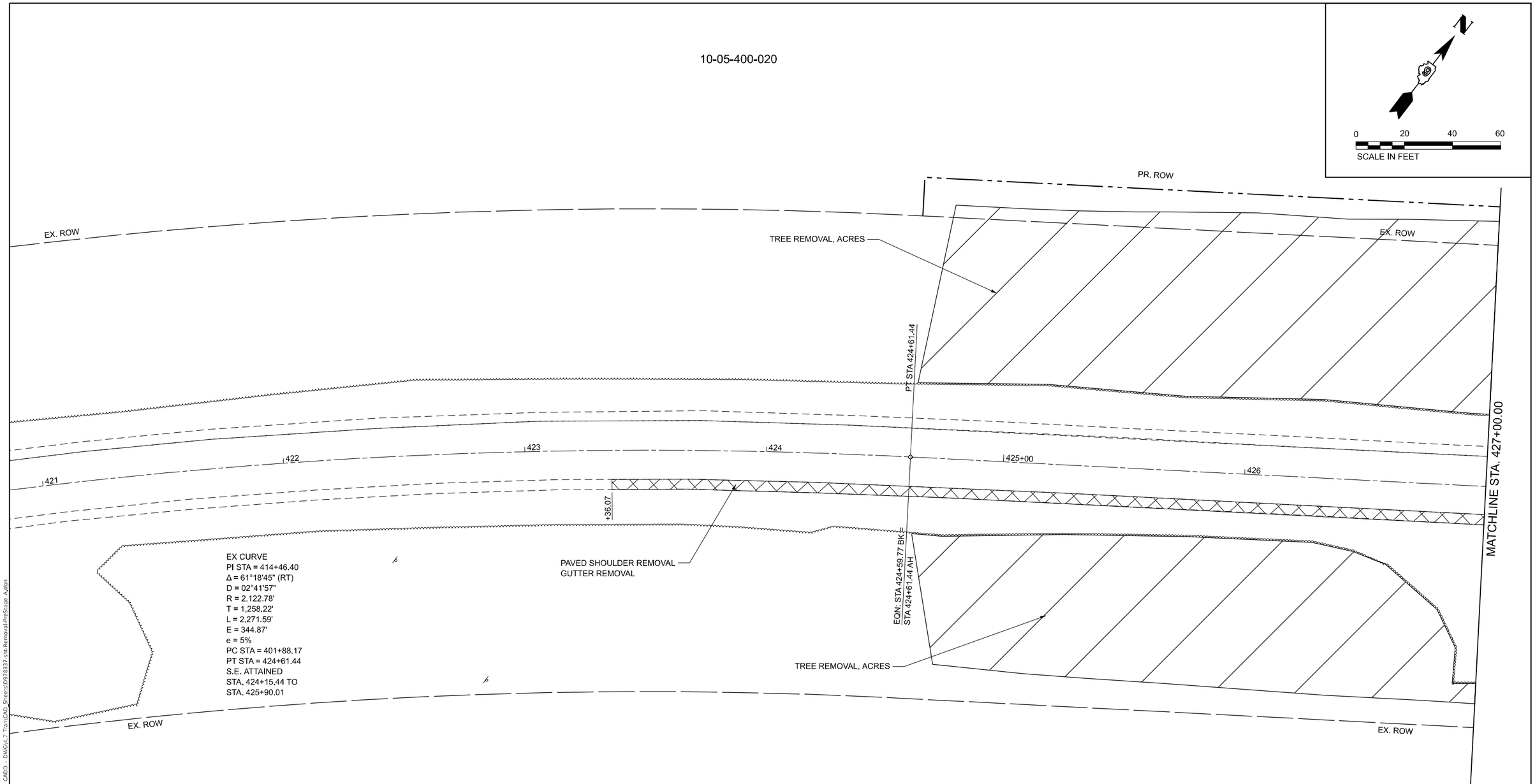

NOTE

1. SEE PRE-STAGE A - STAGING PLAN FOR TRAFFIC CONTROL.

MODEL: Removal Sheet 1
FILE NAME: P:\2022\2019\A - US 51 over ICRR Bridge Replacement (Phase 1)\4 CADD - DWG\4.7 Tran\CAD Sheets\0978937-cit-Removal-PreStage A.dgn

TWM ENGINEERING GEOSPATIAL SERVICES	TWM, INC. WWW.TWM-INC.COM	USER NAME = bbilhartz	DESIGNED - TBP	REVISED -	STATE OF ILLINOIS DEPARTMENT OF TRANSPORTATION	PRE-STAGE A – REMOVAL PLAN US 51	F.A.P. RTE.	SECTION	COUNTY	TOTAL SHEETS	SHEET NO.
	IL DESIGN FIRM LICENSE NO: 184-001220		DRAWN - BAB	REVISED -			322	3VB-3	JACKSON	124	41
		PLOT SCALE = 40.00000000 ' / in.	CHECKED - SJK	REVISED -			CONTRACT NO. 78937				
		PLOT DATE = 8/21/2025	DATE - 5/2025	REVISED -		SCALE: 1"=20' SHEET 1 OF 3 SHEETS STA. 433+36.07 TO STA. 427+00.00	ILLINOIS	FED. AID PROJECT			

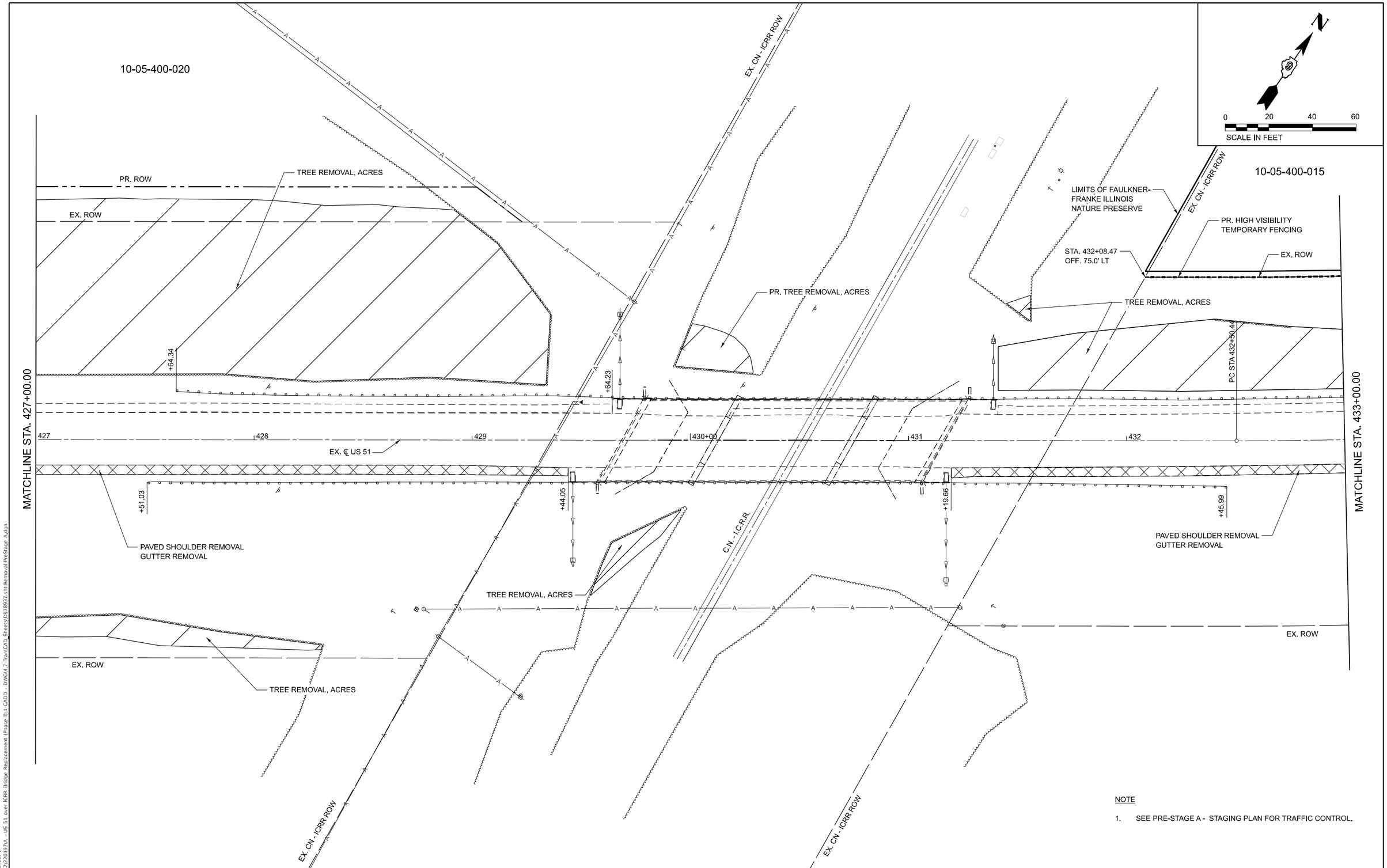

NOTE

1. SEE PRE-STAGE A - STAGING PLAN FOR TRAFFIC CONTROL.

MODEL: Removal Sheet 2
FILE NAME: P:\2022\2019\A - US 51 over ICRR Bridge Replacement (Phase I)\4 CADD - DWG\4.7 Tran\CAD_Sheets\D978937-sht-Removal-PreStage A.dgn

TWM ENGINEERING & GEOSPATIAL SERVICES	TWM, INC. WWW.TWM-INC.COM IL DESIGN FIRM LICENSE NO: 184-001220	USER NAME = bbilhartz	DESIGNED - TBP	REVISED -	STATE OF ILLINOIS DEPARTMENT OF TRANSPORTATION
			DRAWN - BAB	REVISED -	
		PLOT SCALE = 40.00000000 ' / in.	CHECKED - SJK	REVISED -	
		PLOT DATE = 8/21/2025	DATE - 5/2025	REVISED -	

PRE-STAGE A – REMOVAL PLAN
US 51

SCALE: 1"=20' | SHEET 2 OF 3 SHEETS | STA. 427+00.00 TO STA. 433+00.00

F.A.P. RTE.	SECTION	COUNTY	TOTAL SHEETS	SHEET NO.
322	3VB-3	JACKSON	124	42
		CONTRACT NO. 78937		
	ILLINOIS	FED. AID PROJECT		

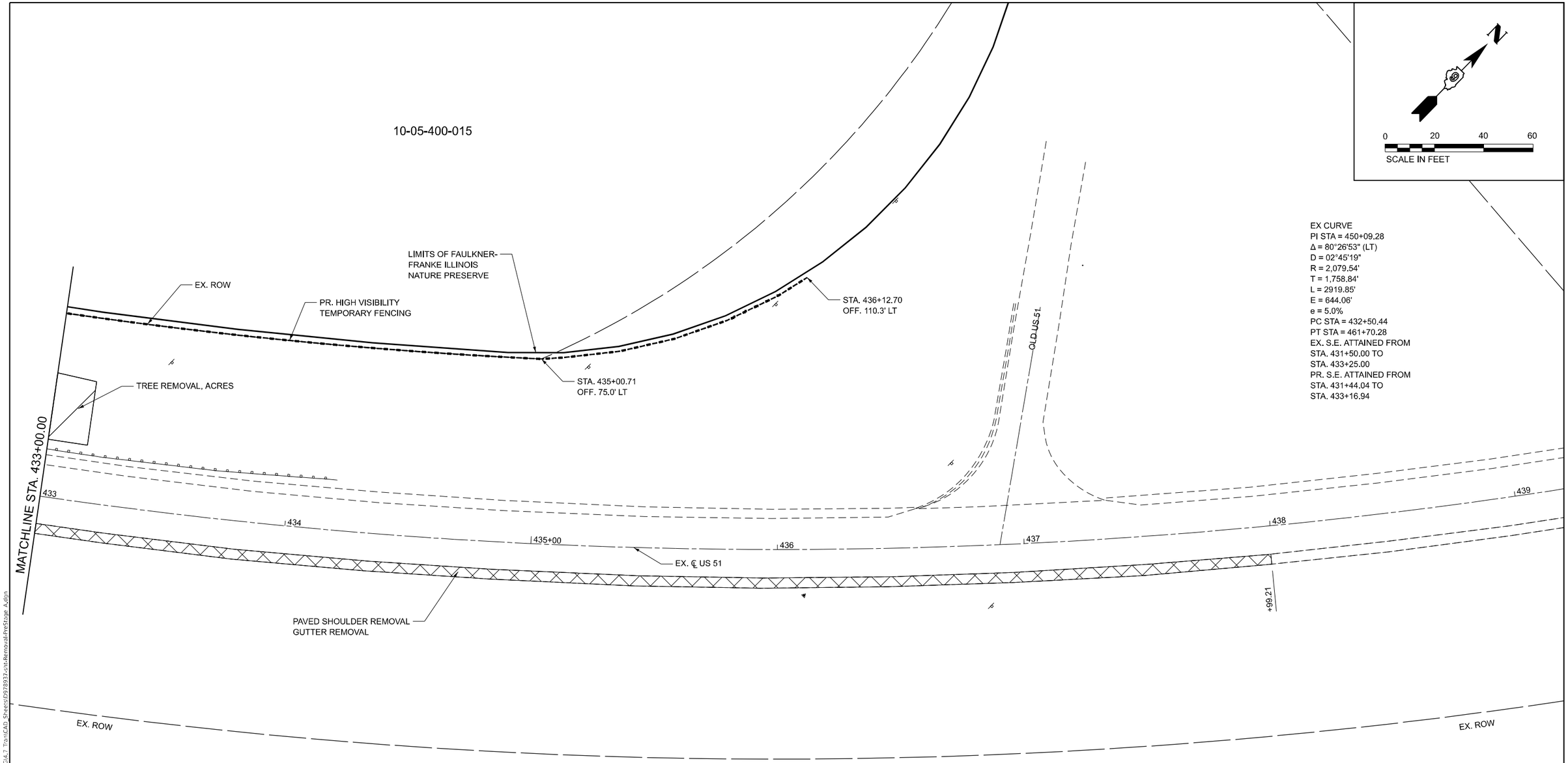

NOTE

1. SEE PRE-STAGE A - STAGING PLAN FOR TRAFFIC CONTROL.

MODEL: Removal Sheet 3
FILE NAME: P:\0222\20197A - US 51 over ICRR Bridge Replacement (Phase 1)\4 CADD - DWG\4.7 Train\CAD Sheets\0978937-int-Removal-PreStage A.dgn

TWM ENGINEERING GEOSPATIAL SERVICES	TWM, INC. WWW.TWM-INC.COM IL DESIGN FIRM LICENSE NO: 184-001220	USER NAME = bbillhartz	DESIGNED - TBP	REVISED -	STATE OF ILLINOIS DEPARTMENT OF TRANSPORTATION
			DRAWN - BAB	REVISED -	
		PLOT SCALE = 40.000000 ' / in.	CHECKED - SJK	REVISED -	
		PLOT DATE = 8/21/2025	DATE - 5/2025	REVISED -	

PRE-STAGE A – REMOVAL PLAN
US 51

SCALE: 1"=20' | SHEET 3 OF 3 SHEETS | STA. 433+00.00 TO STA. 438+00.00

F.A.P. RTE.	SECTION	COUNTY	TOTAL SHEETS	SHEET NO.
322	3VB-3	JACKSON	124	43
		CONTRACT NO. 78937		
		ILLINOIS	FED. AID PROJECT	

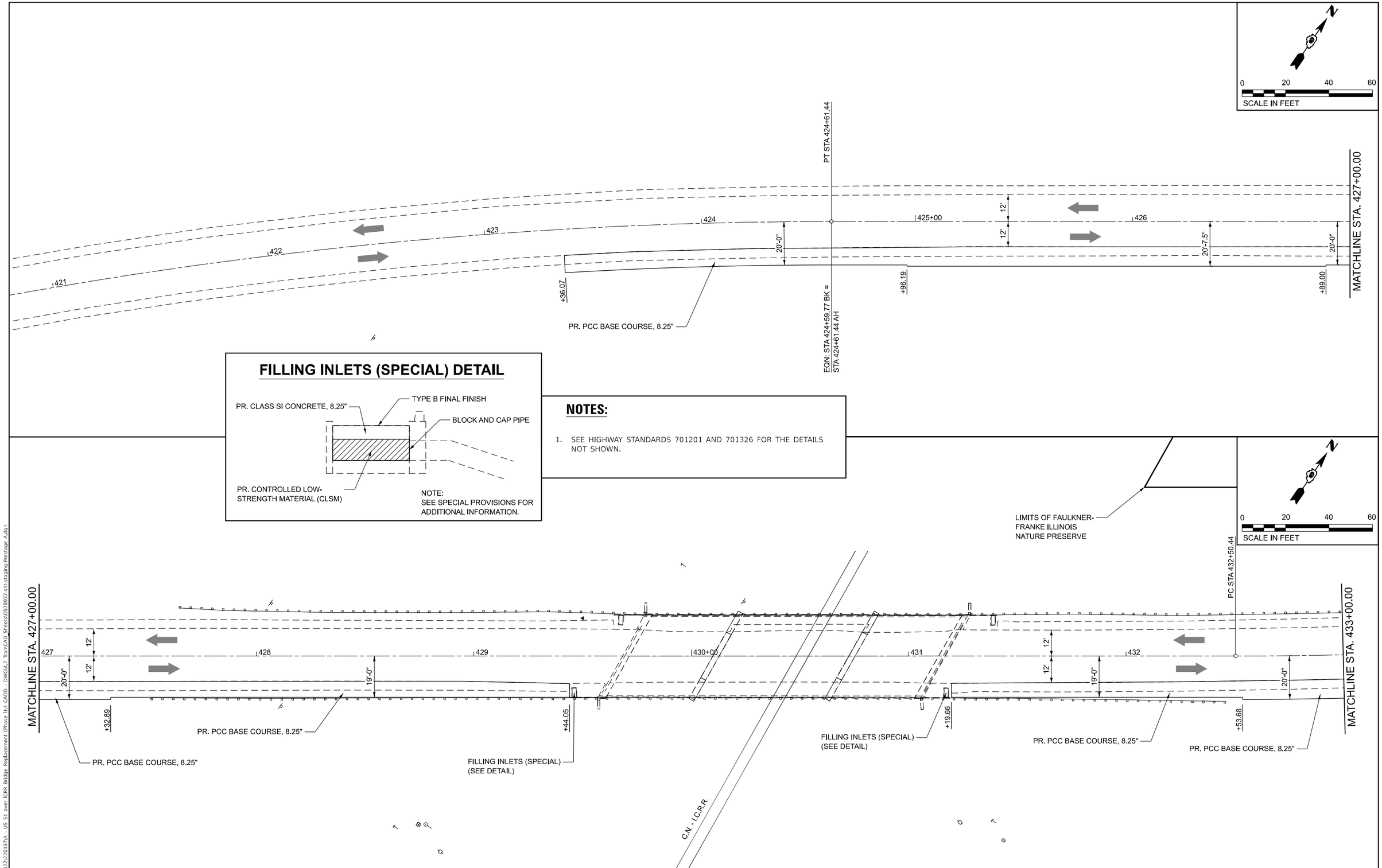

MODEL: Sheet 1
FILE NAME: P:\2022\220197A - US 51 over ICRR Bridge Replacement (Phase 1)\4 CADD - DWG\4.7 Trans\CAD_Sheets\078937-sht-staging-Prestage A.dgn

TWM ENGINEERING & GEOSPATIAL SERVICES	TWM, INC. WWW.TWM-INC.COM IL DESIGN FIRM LICENSE NO: 184-001220	USER NAME = bbillhartz	DESIGNED - TBP	REVISED -	STATE OF ILLINOIS DEPARTMENT OF TRANSPORTATION
			DRAWN - BAB	REVISED -	
		PLOT SCALE = 40.000 ' / in.	CHECKED - SJK	REVISED -	
		PLOT DATE = 8/21/2025	DATE - 5/2025	REVISED -	

PRE-STAGE A – STAGING PLAN
US 51

SCALE: 1"=20' | SHEET 1 OF 2 SHEETS | STA. 421+00.00 TO STA. 433+00.00

F.A.P. RTE.	SECTION	COUNTY	TOTAL SHEETS	SHEET NO.
322	3VB-3	JACKSON	124	44
		CONTRACT NO. 78937		
		ILLINOIS	FED. AID PROJECT	

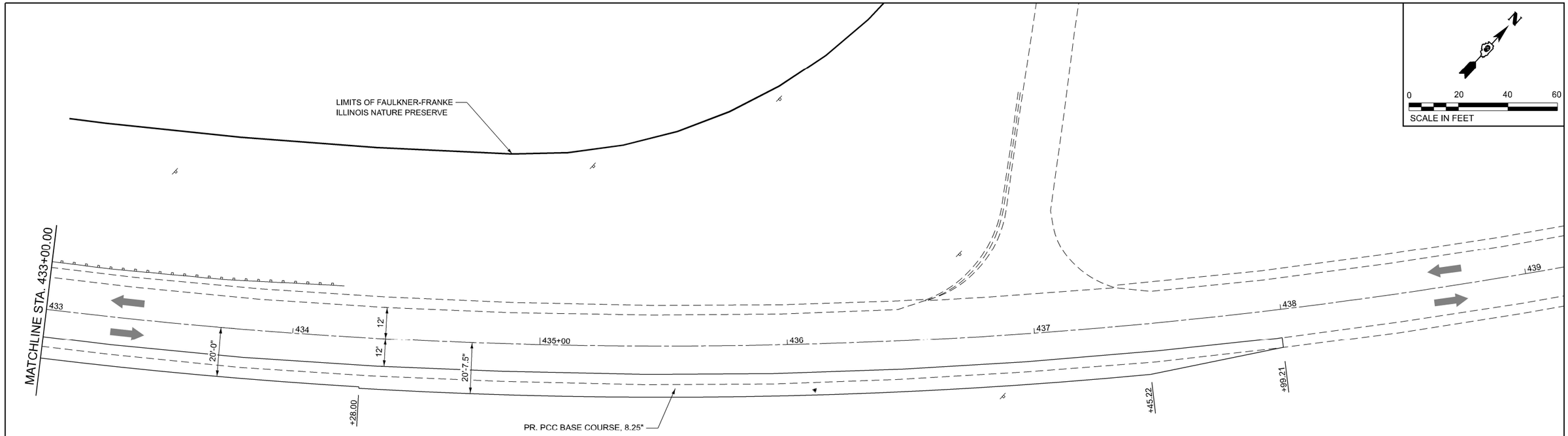

NOTES:

1. SEE HIGHWAY STANDARDS 701201 AND 701326 FOR THE DETAILS NOT SHOWN.

MODEL: Sheet 2
FILE NAME: P:\2022\2019\A - US 51 over KCRR Bridge Replacement (Phase II)\4 CADD - DWG\4.7 Traf\CAD Sheets\D7978937-sht-staging-Prestage A.dgn

TWM ENGINEERING GEOSPATIAL SERVICES	TWM, INC. WWW.TWM-INC.COM IL DESIGN FIRM LICENSE NO: 184-001220	USER NAME = bbillhartz	DESIGNED - TBP	REVISED -	STATE OF ILLINOIS DEPARTMENT OF TRANSPORTATION
			DRAWN - BAB	REVISED -	
		PLOT SCALE = 40.000 ' / in.	CHECKED - SJK	REVISED -	
		PLOT DATE = 8/21/2025	DATE - 5/2025	REVISED -	

PRE-STAGE A – STAGING PLAN
US 51

SCALE: 1"=20' | SHEET 2 OF 2 SHEETS | STA. 433+00.00 TO STA. 439+00.00

F.A.P. RTE.	SECTION	COUNTY	TOTAL SHEETS	SHEET NO.
322	3VB-3	JACKSON	124	45
		CONTRACT NO. 78937		
		ILLINOIS	FED. AID PROJECT	

NOTES

1. STAGE TYPICAL IS GENERIC FOR STAGE 1 WORK.
2. SEE PROPOSED TYPICAL SECTIONS FOR CONSTRUCTION DETAILS.

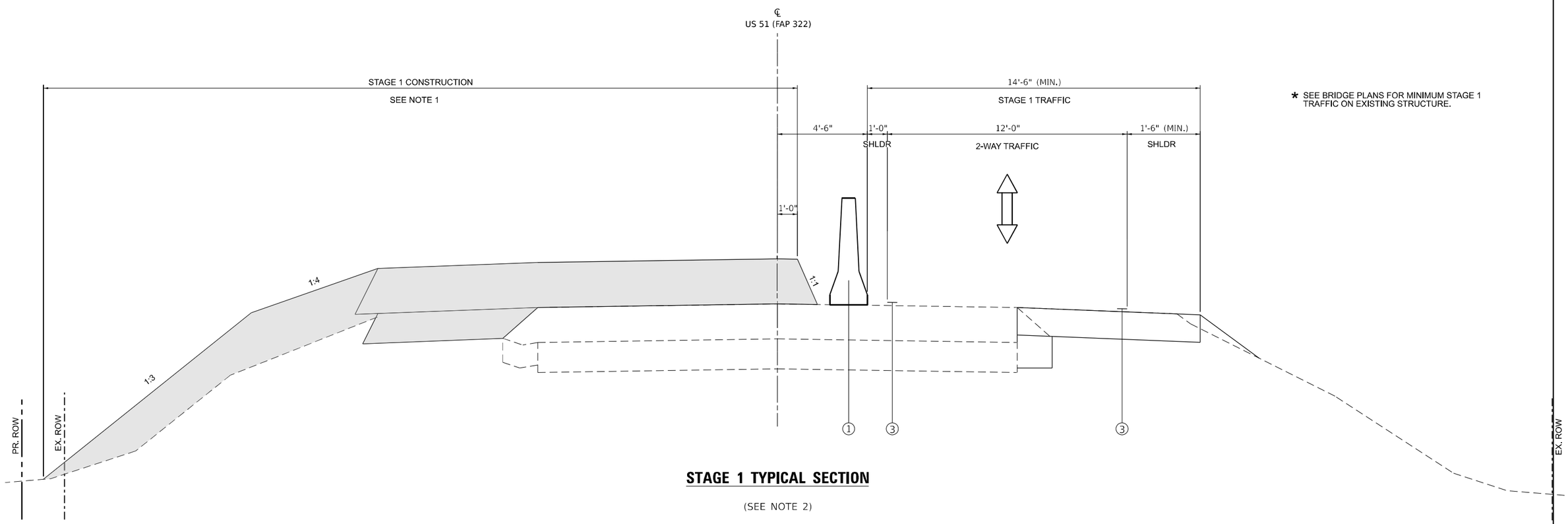

* SEE BRIDGE PLANS FOR MINIMUM STAGE 1 TRAFFIC ON EXISTING STRUCTURE.

STAGE 1 TYPICAL SECTION

(SEE NOTE 2)

STAGE CONSTRUCTION LEGEND

1. PR. TEMPORARY CONCRETE BARRIER
2. PR. TEMPORARY CONCRETE BARRIER (PINNED)
3. PR. TEMPORARY PAVEMENT MARKING TAPE, TYPE IV, 4"

WORK COMPLETED DURING STAGE CONSTRUCTION (SEE NOTES)

MODEL: Default
FILE NAME: P:\2022\220197A - US 51 over ICRR Bridge Replacement (Phase 1)\4 CADD - DWG\4.7 Train\CAD Sheets\0978937-int-typical-staging.dgn

TWM ENGINEERING GEOSPATIAL SERVICES	TWM, INC. WWW.TWM-INC.COM IL DESIGN FIRM LICENSE NO: 184-001220	USER NAME = bbillhartz	DESIGNED - TBP	REVISED -	STATE OF ILLINOIS DEPARTMENT OF TRANSPORTATION	STAGE 1 – STAGING TYPICAL SECTION US 51	F.A.P. RTE.	SECTION	COUNTY	TOTAL SHEETS	SHEET NO.
			DRAWN - BAB	REVISED -			322	3VB-3	JACKSON	124	46
		PLOT SCALE = 5.000 ' / in.	CHECKED - SJK	REVISED -			CONTRACT NO. 78937				
		PLOT DATE = 8/21/2025	DATE - 5/2025	REVISED -		SCALE: N.T.S. SHEET 1 OF 1 SHEETS STA. TO STA.	ILLINOIS FED. AID PROJECT				

10-05-400-020

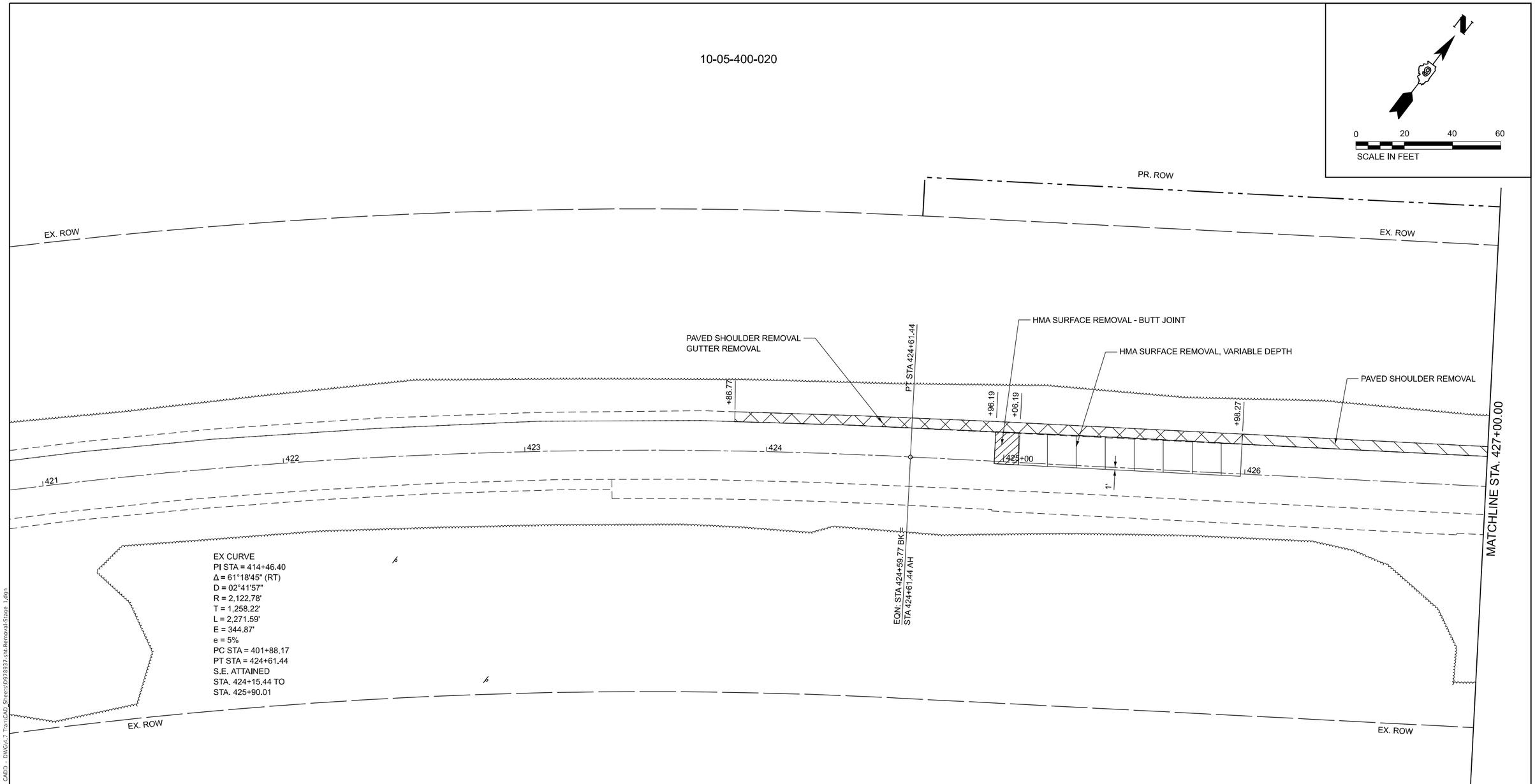

NOTES:

1. SEE STAGE 1 - STAGING PLAN FOR TRAFFIC CONTROL.

MODEL: Removal Sheet 1
FILE NAME: P:\0222\20197A - US 51 over ICRR Bridge Replacement (Phase 1)\4 CADD - DWG\4.7 Tsn\CAD_Sheets\0978937-sht-Removal-Stage 1.dgn

TWM ENGINEERING GEOSPATIAL SERVICES	TWM, INC. WWW.TWM-INC.COM IL DESIGN FIRM LICENSE NO: 184-001220	USER NAME = bbillhartz	DESIGNED - TBP	REVISED -	STATE OF ILLINOIS DEPARTMENT OF TRANSPORTATION	STAGE 1 – REMOVAL PLAN US 51	F.A.P. RTE.	SECTION	COUNTY	TOTAL SHEETS	SHEET NO.
			DRAWN - BAB	REVISED -			322	3VB-3	JACKSON	124	47
		PLOT SCALE = 40.00000000 ' / in.	CHECKED - SJK	REVISED -			CONTRACT NO. 78937				
		PLOT DATE = 8/21/2025	DATE - 5/2025	REVISED -		SCALE: 1"=20' SHEET 1 OF 3 SHEETS STA. 433+36.07 TO STA. 427+00.00	ILLINOIS	FED. AID PROJECT			

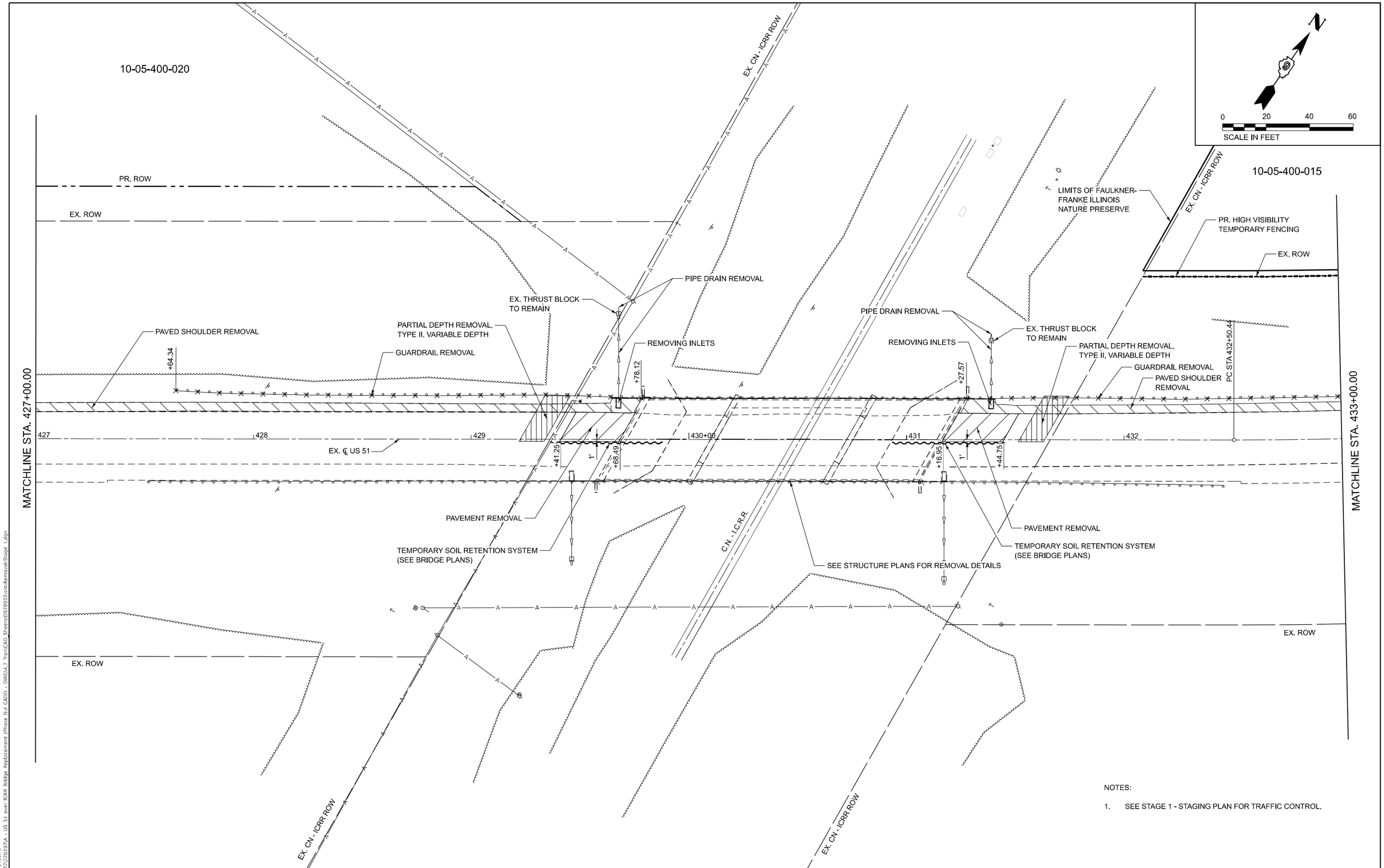

NOTES:

1. SEE STAGE 1 - STAGING PLAN FOR TRAFFIC CONTROL.

MODEL: Removal Sheet 2
FILE NAME: P:\2022\22019\A - US 51 over ICRR Bridge Replacement (Phase II)\4 CADD - DWG\4.7 Tran\CAD Sheets\D2978937-sht-Removal-Stage 1.dgn

TWM ENGINEERING GEOSPATIAL SERVICES	TWM, INC. WWW.TWM-INC.COM IL DESIGN FIRM LICENSE NO: 184-001220	USER NAME = bbillhartz	DESIGNED - TBP	REVISED -	STATE OF ILLINOIS DEPARTMENT OF TRANSPORTATION
			DRAWN - BAB	REVISED -	
		PLOT SCALE = 40.00000000 ' / in.	CHECKED - SJK	REVISED -	
		PLOT DATE = 8/21/2025	DATE - 5/2025	REVISED -	

STAGE 1 – REMOVAL PLAN
US 51

SCALE: 1"=20' | SHEET 2 OF 3 SHEETS | STA. 427+00.00 TO STA. 433+00.00

F.A.P. RTE.	SECTION	COUNTY	TOTAL SHEETS	SHEET NO.
322	3VB-3	JACKSON	124	48
		CONTRACT NO. 78937		
		ILLINOIS	FED. AID PROJECT	

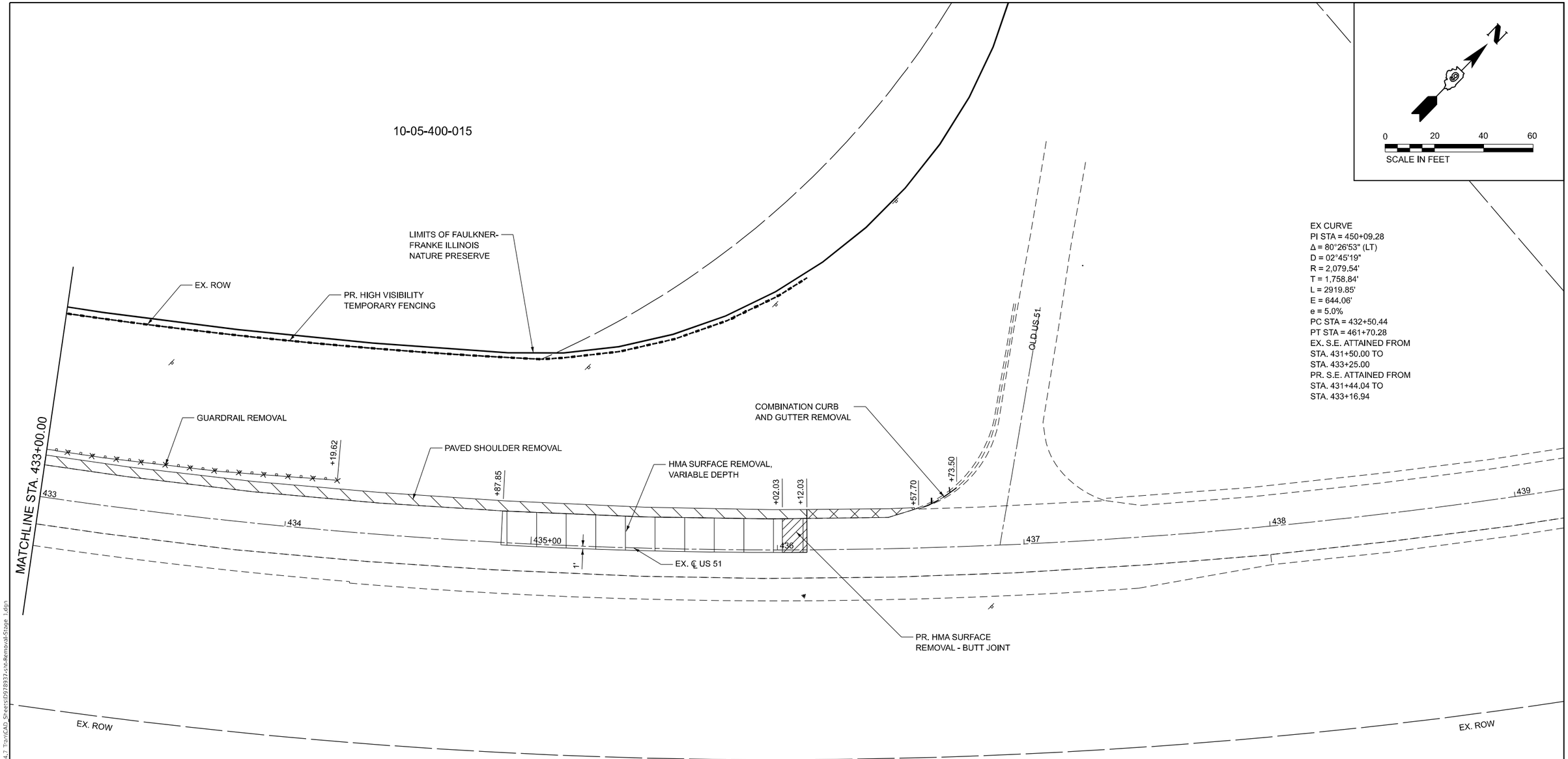

EX CURVE
PI STA = 450+09.28
Δ = 80°26'53" (LT)
D = 02°45'19"
R = 2,079.54'
T = 1,758.84'
L = 2919.85'
E = 644.06'
e = 5.0%
PC STA = 432+50.44
PT STA = 461+70.28
EX. S.E. ATTAINED FROM
STA. 431+50.00 TO
STA. 433+25.00
PR. S.E. ATTAINED FROM
STA. 431+44.04 TO
STA. 433+16.94

NOTES:

1. SEE STAGE 1 - STAGING PLAN FOR TRAFFIC CONTROL.

MODEL: Removal Sheet 3
FILE NAME: P:\2022\20197A - US 51 over ICRR Bridge Replacement (Phase II)\4 CADD - DWG\4.7 Tran\CAD_Sheets\D978937-Int-Removal-Stage 1.dgn

TWM ENGINEERING GEOSPATIAL SERVICES	TWM, INC. WWW.TWM-INC.COM	USER NAME = bbillhartz	DESIGNED - TBP	REVISED -	STATE OF ILLINOIS DEPARTMENT OF TRANSPORTATION	STAGE 1 – REMOVAL PLAN US 51			F.A.P. RTE.	SECTION	COUNTY	TOTAL SHEETS	SHEET NO.
	IL DESIGN FIRM LICENSE NO: 184-001220		DRAWN - BAB	REVISED -					322	3VB-3	JACKSON	124	49
		PLOT SCALE = 40.000000 ' / in.	CHECKED - SJK	REVISED -							CONTRACT NO. 78937		
		PLOT DATE = 8/21/2025	DATE - 5/2025	REVISED -		SCALE: 1"=20'	SHEET 3 OF 3 SHEETS	STA. 433+00.00 TO STA. 438+00.00			ILLINOIS FED. AID PROJECT		

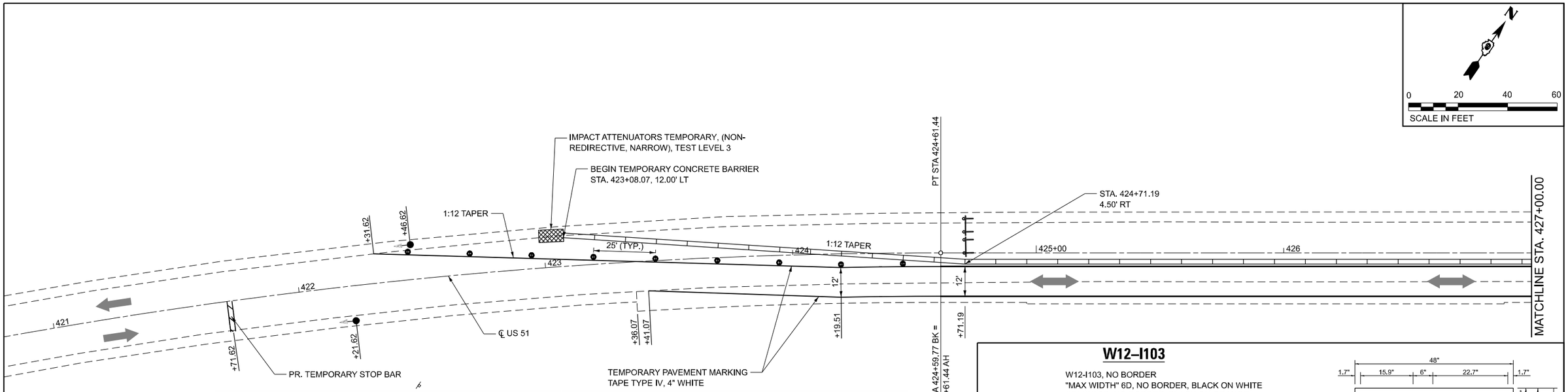

LEGEND

- TEMPORARY CONCRETE BARRIER
- IMPACT ATTENUATOR
- DRUMS W/ STEADY BI-DIRECTIONAL BURN LIGHTS
- TYPE III BARRICADE W/ FLASHING LIGHTS
- TEMPORARY TRAFFIC SIGNALS (SEE NOTE 5)

NOTES:

1. SEE HIGHWAY STANDARD 701321 FOR THE DETAILS NOT SHOWN.
2. ALL OFFSETS FOR THE TEMPORARY CONCRETE BARRIER ARE TO THE FACE OF THE TRAFFIC SIDE.
3. TRAFFIC CONTROL FOR STAGE 1 AND 2 SHALL BE PAID FOR AS TRAFFIC CONTROL AND PROTECTION, STANDARD 701321.
4. THE TEMPORARY RUMBLE STRIPS SHALL BE PLACED FOR USE DURING STAGE 1 AND 2 WITHOUT RELOCATION.
5. THE TEMPORARY TRAFFIC SIGNALS SHALL INCLUDE AN UNINTERRUPTABLE POWER SUPPLY, EXTENDED.
6. STAGE 1 PROPOSED WORK NOT SHOWN FOR CLARITY.

W12–I103

W12-I103, NO BORDER
"MAX WIDTH" 6D, NO BORDER, BLACK ON WHITE
"XX-XX" 8D, NO BORDER, BLACK ON ORANGE
"X MILES" 6D, NO BORDER, BLACK ON WHITE
"AHEAD" 6D, NO BORDER, BLACK ON WHITE

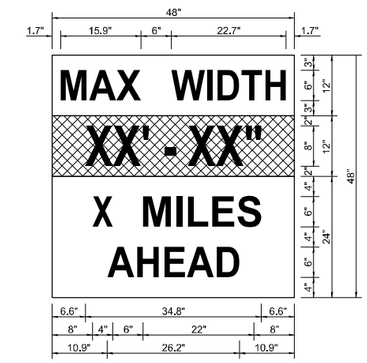

NOTES FOR MAX WIDTH SIGN:

1. INSTALL A MAX WIDTH SIGN EACH DIRECTION ON US 51 TO GIVE TRAFFIC APPROACHING WORK ZONE ENOUGH ADVANCE NOTICE TO CHANGE ROUTES IF NEEDED. EXACT LOCATIONS AS DIRECTED BY THE ENGINEER.
2. THE CONTRACTOR SHALL FURNISH THE POSTS AND ERECT THE SIGNS AT THE LOCATIONS DETERMINED BY THE ENGINEER. ALL SIGNS SHALL BE POST MOUNTED. THE CONTRACTOR SHALL REMOVE THE SIGNS ANS POSTS AFTER STAGE 2.
3. THE NOTED WORK, INCLUDING SIGNS, POSTS, HARDWARE AND LABOR SHALL BE INCLUDED IN THE CONTRACT UNIT PRICE, EACH, FOR TRAFFIC CONTROL AND PROTECTION, STD. 701321, NO OTHER COMPENSATION WILL BE ALLOWED.
4. THE WIDTH SHOWN ON THE W12-I103 SIGN SHALL BE 18" LESS THAN WHAT IS SHOWN IN THE STAGED LANE WIDTHS OR AS DIRECTED BY THE ENGINEER.
5. THE "X" MILES AHEAD SIGN WILL BE DETERMINED BY THE ENGINEER.
6. MAX WIDTH SIGNAGE SHALL REMAIN IN PLACE FOR STAGES 1 AND 2.

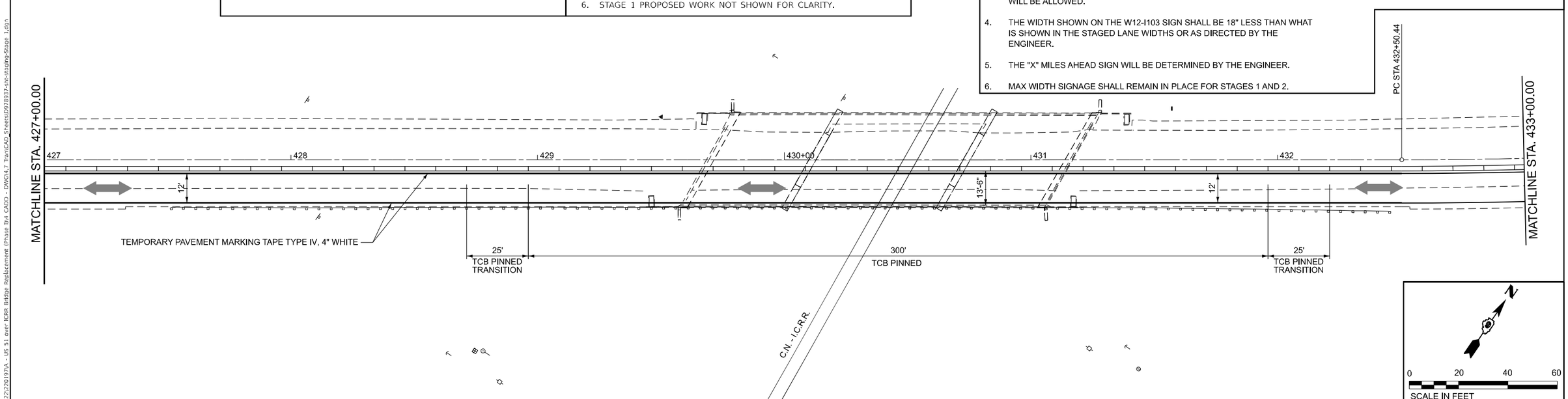

MODEL: Sheet 1
FILE NAME: P:\2022\220197A - US 51 over ICRR Bridge Replacement (Phase 1)\4 CADD - DWG\4.7 Tran\CAD Sheets\078937-sht-staging-Stage 1.dgn

TWM ENGINEERING GEOSPATIAL SERVICES	TWM, INC. WWW.TWM-INC.COM IL DESIGN FIRM LICENSE NO: 184-001220	USER NAME = bbillhartz	DESIGNED - TBP	REVISED -	STATE OF ILLINOIS DEPARTMENT OF TRANSPORTATION
			DRAWN - BAB	REVISED -	
		PLOT SCALE = 40.000 ' / in.	CHECKED - SJK	REVISED -	
		PLOT DATE = 8/21/2025	DATE - 5/2025	REVISED -	

STAGE 1 – STAGING PLAN
US 51

SCALE: 1"=20' | SHEET 1 OF 2 SHEETS | STA. 421+00.00 TO STA. 433+00.00

F.A.P. RTE.	SECTION	COUNTY	TOTAL SHEETS	SHEET NO.
322	3VB-3	JACKSON	124	50
		CONTRACT NO. 78937		
		ILLINOIS	FED. AID PROJECT	

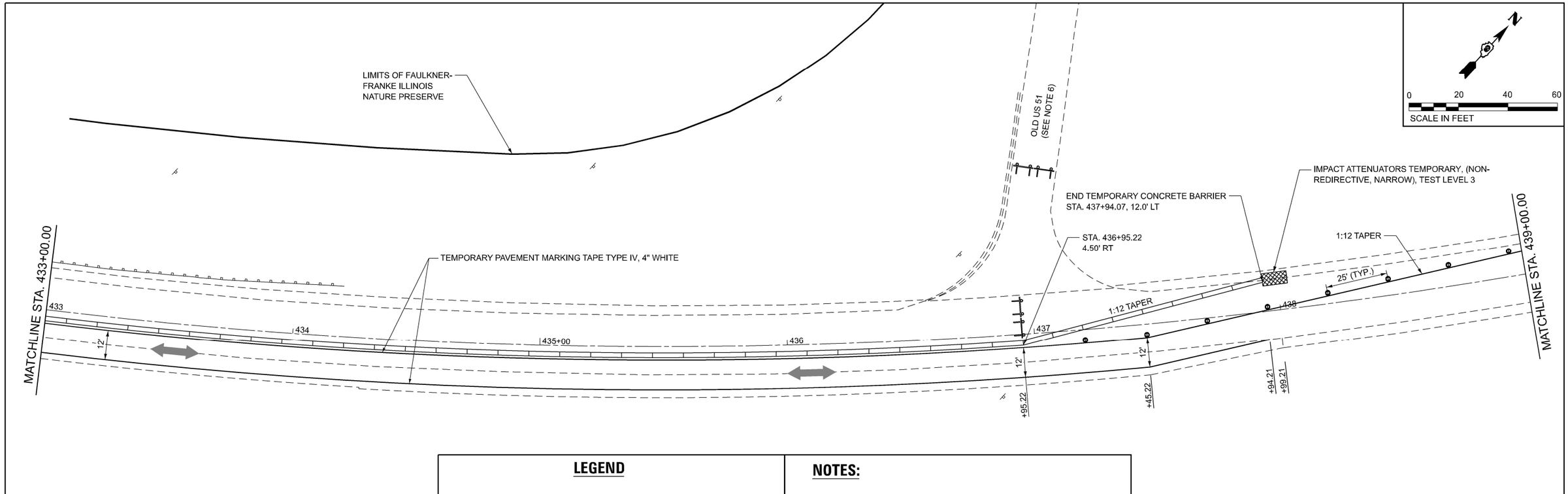

LEGEND

- TEMPORARY CONCRETE BARRIER
- IMPACT ATTENUATOR
- DRUMS W/ STEADY BI-DIRECTIONAL BURN LIGHTS
- TYPE III BARRICADE W/ FLASHING LIGHTS
- TEMPORARY TRAFFIC SIGNALS (SEE NOTE 5)

NOTES:

1. SEE HIGHWAY STANDARD 701321 FOR THE DETAILS NOT SHOWN.
2. ALL OFFSETS FOR THE TEMPORARY CONCRETE BARRIER ARE TO THE FACE OF THE TRAFFIC SIDE.
3. TRAFFIC CONTROL FOR STAGE 1 AND 2 SHALL BE PAID FOR AS TRAFFIC CONTROL AND PROTECTION, STANDARD 701321.
4. THE TEMPORARY RUMBLE STRIPS SHALL BE PLACED FOR USE DURING STAGE 1 AND 2 WITHOUT RELOCATION.
5. THE TEMPORARY TRAFFIC SIGNALS SHALL INCLUDE AN UNINTERRUPTABLE POWER SUPPLY, EXTENDED.
6. TEMPORARILY CLOSE OLD US 51 ACCORDING TO HIGHWAY STANDARD BLR 21-9.
7. STAGE 1 PROPOSED WORK NOT SHOWN FOR CLARITY.

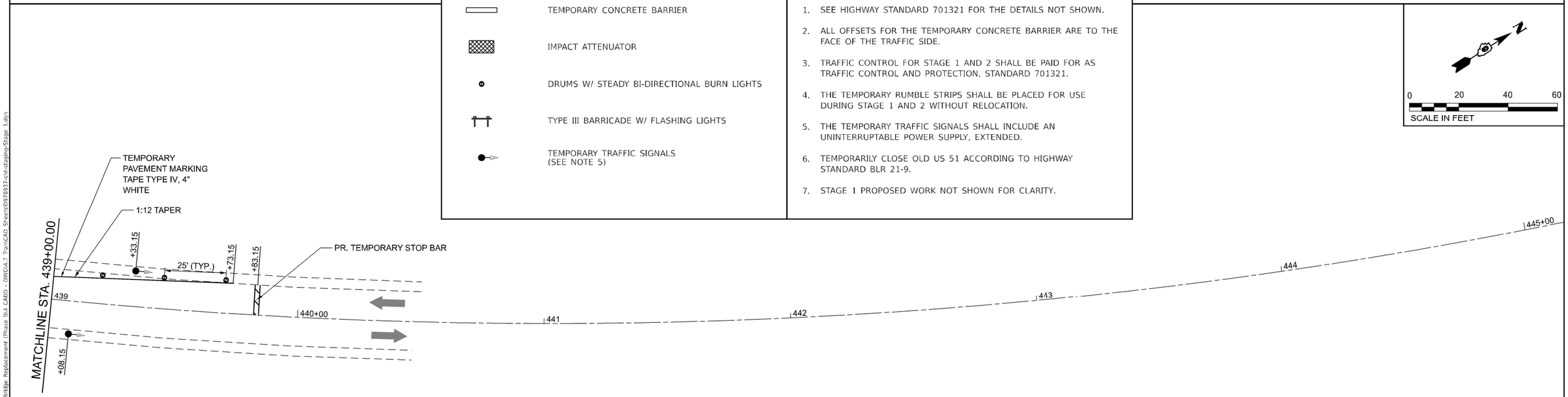

MODEL: Sheet 2
FILE NAME: P:\2022\2019\A - US 51 over ICRR Bridge Replacement (Phase 1)\4 CADD - DWG\4.7 Tran\CAD Sheets\0978937-sht-staging-Stage 1.dgn

TWM ENGINEERING GEOSPATIAL SERVICES	TWM, INC. WWW.TWM-INC.COM IL DESIGN FIRM LICENSE NO: 184-001220	USER NAME = bbillhartz	DESIGNED - TBP	REVISED -	STATE OF ILLINOIS DEPARTMENT OF TRANSPORTATION
			DRAWN - BAB	REVISED -	
		PLOT SCALE = 40.000 ' / in.	CHECKED - SJK	REVISED -	
		PLOT DATE = 8/21/2025	DATE - 5/2025	REVISED -	

STAGE 1 – STAGING PLAN
US 51

SCALE: 1"=20' | SHEET 2 OF 2 SHEETS | STA. 433+00.00 TO STA. 445+00.00

F.A.P. RTE.	SECTION	COUNTY	TOTAL SHEETS	SHEET NO.
322	3VB-3	JACKSON	124	51

CONTRACT NO. 78937

ILLINOIS | FED. AID PROJECT

10-05-400-020

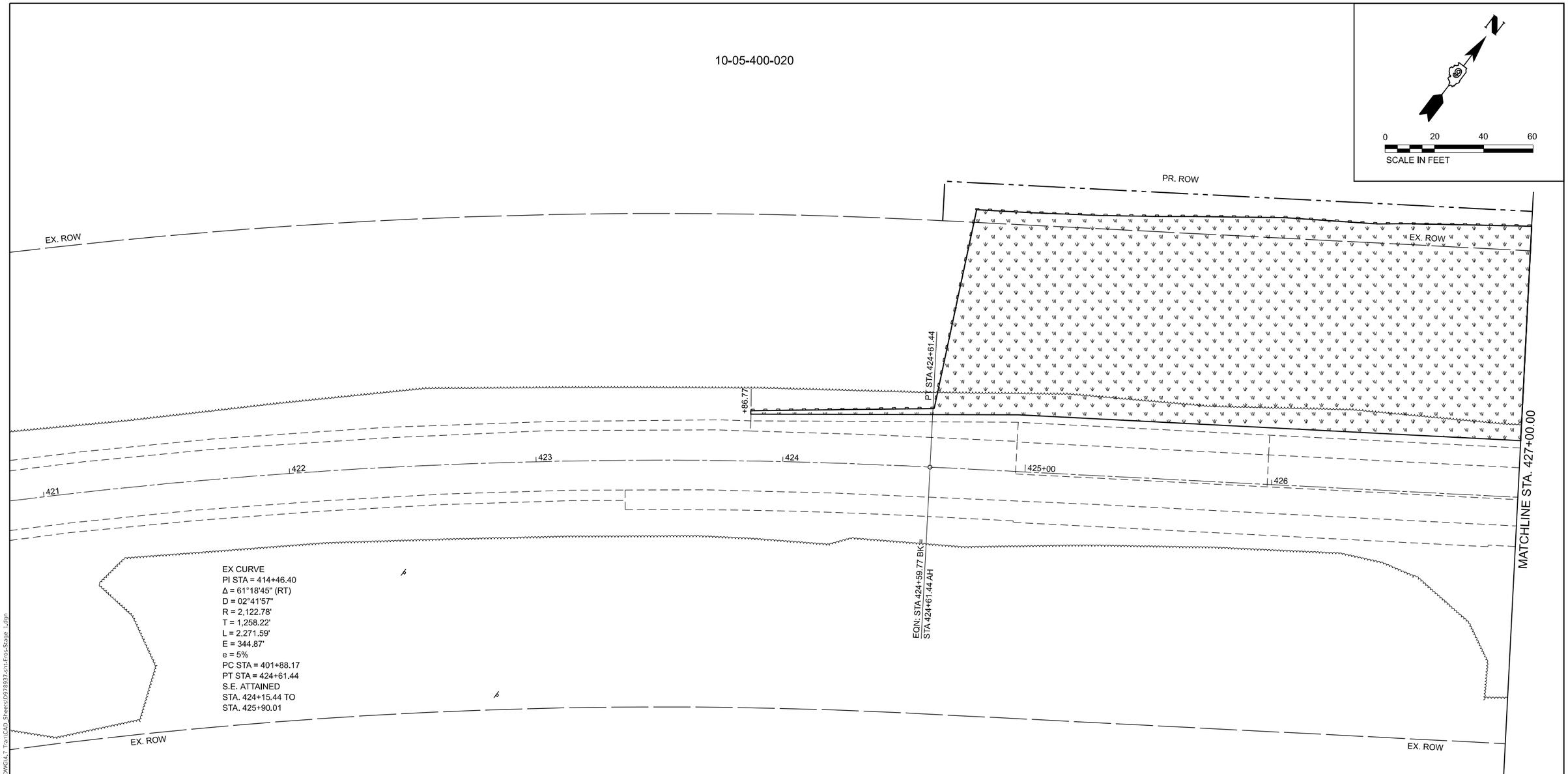

LEGEND

PR. SEEDING CLASS, 2A AND
PR. SEEDING, CLASS 7
W/ FERTILIZER NUTRIENTS
PR. EROSION CONTROL BLANKET

PR. PERIMETER EROSION BARRIER

PR. STONE RIPRAP, CLASS A4

MODEL: Erosion Control Sheet 1
FILE NAME: P:\2022\220197A - US 51 over ICRR Bridge Replacement (Phase 1)\4 CADD - DWG\4.7 Tran\CAD Sheets\0978937-sht-Eros-Stage 1.dgn

TWM ENGINEERING GEOSPATIAL SERVICES	TWM, INC. WWW.TWM-INC.COM	USER NAME = bbillhartz	DESIGNED - TBP	REVISED -	STATE OF ILLINOIS DEPARTMENT OF TRANSPORTATION
	IL DESIGN FIRM LICENSE NO: 184-001220	PLOT SCALE = 40.00000000 ' / in.	DRAWN - BAB	REVISED -	
		PLOT DATE = 8/21/2025	CHECKED - SJK	REVISED -	
			DATE - 5/2025	REVISED -	

STAGE 1 – EROSION CONTROL PLAN
US 51

SCALE: 1"=20' | SHEET 1 OF 3 SHEETS | STA. 433+36.07 TO STA. 427+00.00

F.A.P. RTE.	SECTION	COUNTY	TOTAL SHEETS	SHEET NO.
322	3VB-3	JACKSON	124	52

CONTRACT NO. 78937

ILLINOIS | FED. AID PROJECT

10-05-400-020

10-05-400-015

EX. CN - ICRR ROW

8' X 83'

PR. ROW

EX. ROW

LIMITS OF FAULKNER-
FRANKE ILLINOIS
NATURE PRESERVE

8' X 46'

EX. ROW

A A

A A

RC STA 432+50.44

MATCHLINE STA. 427+00.00

MATCHLINE STA. 433+00.00

427 428 429 430+00 431 432

EX. ℄ US 51

C.N. - I.C.R.R.

EX. ROW

EX. ROW

EX. CN - ICRR ROW

N

0 20 40 60

SCALE IN FEET

℄
STA. 428+99.28 LT
STA. 431+86.72 LT

2.0' 2.0' 2.0' 2.0'

PR. GRADE

2 1 1 2

16"

BEDDING

PR. FILTER FABRIC

PR. STONE RIPRAP,
CLASS A4

SECTION A–A

STONE RIPRAP, CLASS A4 DETAIL

LEGEND

PR. SEEDING CLASS, 2A AND
PR. SEEDING, CLASS 7
W/ FERTILIZER NUTRIENTS
PR. EROSION CONTROL BLANKET

PR. PERIMETER EROSION BARRIER

PR. STONE RIPRAP, CLASS A4

MODEL: Erosion Control Sheet 2
FILE NAME: P:\2022\22\0197\A - US 51 over ICRR Bridge Replacement (Phase I)\4 CADD - DWG\4.7 Trans\CAD_Sheets\0978937-sht-Eros-Stage 1.dgn

TWM ENGINEERING GEOSPATIAL SERVICES	TWM, INC. WWW.TWM-INC.COM IL DESIGN FIRM LICENSE NO: 184-001220	USER NAME = bbillhartz	DESIGNED - TBP	REVISED -	STATE OF ILLINOIS DEPARTMENT OF TRANSPORTATION
			DRAWN - BAB	REVISED -	
		PLOT SCALE = 40.00000000 ' / in.	CHECKED - SJK	REVISED -	
		PLOT DATE = 8/21/2025	DATE - 5/2025	REVISED -	

STAGE 1 – EROSION CONTROL PLAN
US 51

SCALE: 1"=20' | SHEET 2 OF 3 SHEETS | STA. 427+00.00 TO STA. 433+00.00

F.A.P. RTE.	SECTION	COUNTY	TOTAL SHEETS	SHEET NO.
322	3VB-3	JACKSON	124	53
		CONTRACT NO. 78937		
		ILLINOIS	FED. AID PROJECT	

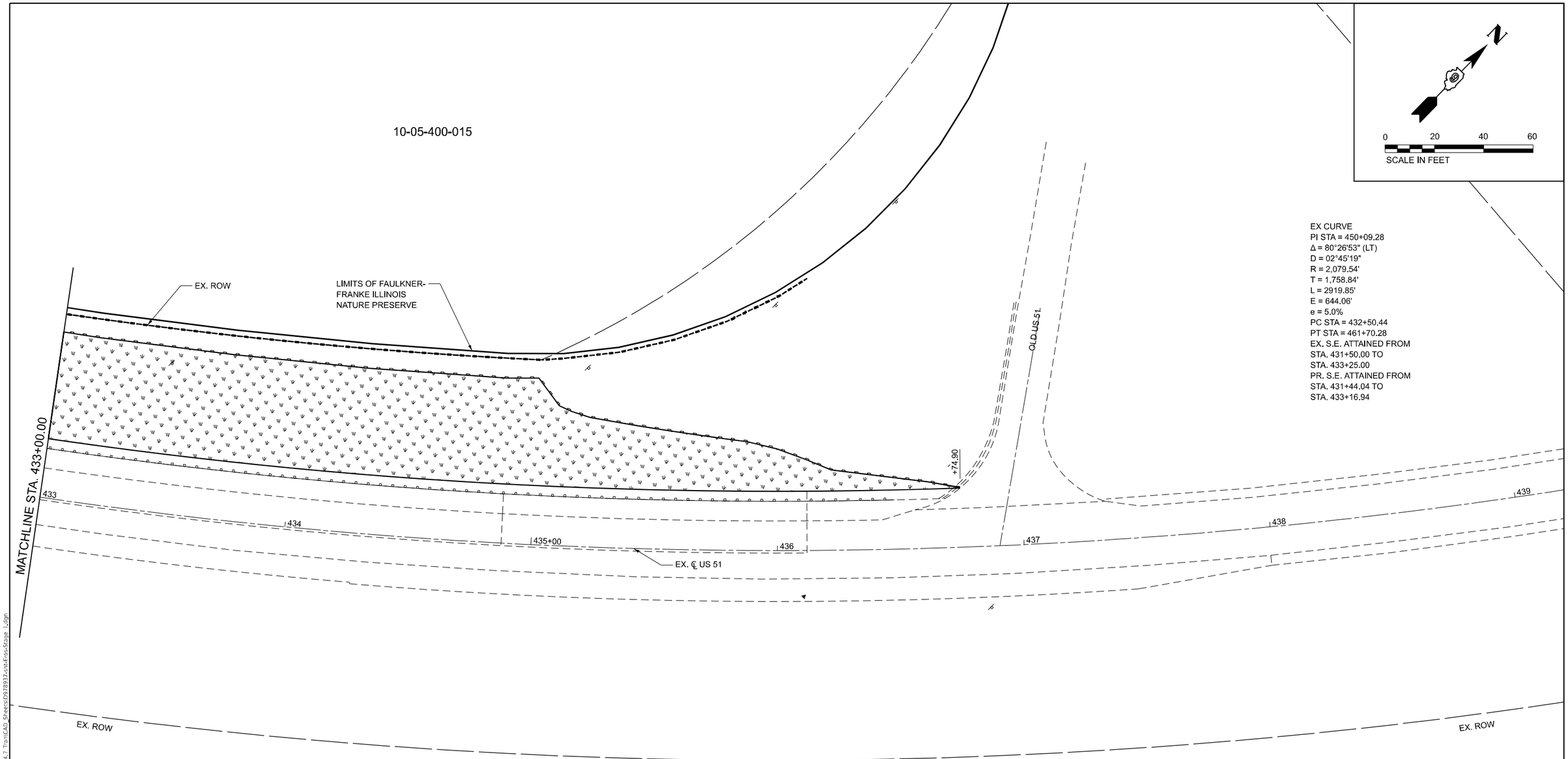

EX CURVE
PI STA = 450+09.28
Δ = 80°26'53" (LT)
D = 02°45'19"
R = 2,079.54'
T = 1,758.84'
L = 2919.85'
E = 644.06'
e = 5.0%
PC STA = 432+50.44
PT STA = 461+70.28
EX. S.E. ATTAINED FROM
STA. 431+50.00 TO
STA. 433+25.00
PR. S.E. ATTAINED FROM
STA. 431+44.04 TO
STA. 433+16.94

LEGEND

PR. SEEDING CLASS, 2A AND
PR. SEEDING, CLASS 7
W/ FERTILIZER NUTRIENTS
PR. EROSION CONTROL BLANKET

PR. PERIMETER EROSION BARRIER

PR. STONE RIPRAP, CLASS A4

MODEL: Erosion Control Sheet 3
FILE NAME: P:\2022\2019\A - US 51 over ICRR Bridge Replacement (Phase II)\4 CADD - DWG\4.7 TransCAD_Sheets\0928937-sht-Eros-Stage 1.dgn

TWM ENGINEERING GEOSPATIAL SERVICES
TWM, INC.
WWW.TWM-INC.COM
IL DESIGN FIRM LICENSE NO: 184-001220

USER NAME = bbilhartz	DESIGNED - TBP	REVISED -	
	DRAWN - BAB	REVISED -	
PLOT SCALE = 40.000000 ' / in.	CHECKED - SJK	REVISED -	
PLOT DATE = 8/21/2025	DATE - 5/2025	REVISED -	

STATE OF ILLINOIS
DEPARTMENT OF TRANSPORTATION

STAGE 1 – EROSION CONTROL PLAN
US 51

SCALE: 1"=20' | SHEET 3 OF 3 SHEETS | STA. 433+00.00 TO STA. 438+00.00

F.A.P. RTE.	SECTION	COUNTY	TOTAL SHEETS	SHEET NO.
322	3VB-3	JACKSON	124	54

CONTRACT NO. 78937

ILLINOIS | FED. AID PROJECT

NOTES

1. STAGE TYPICAL IS GENERIC FOR STAGE 2 WORK.
2. SEE PROPOSED TYPICAL SECTIONS FOR CONSTRUCTION DETAILS.

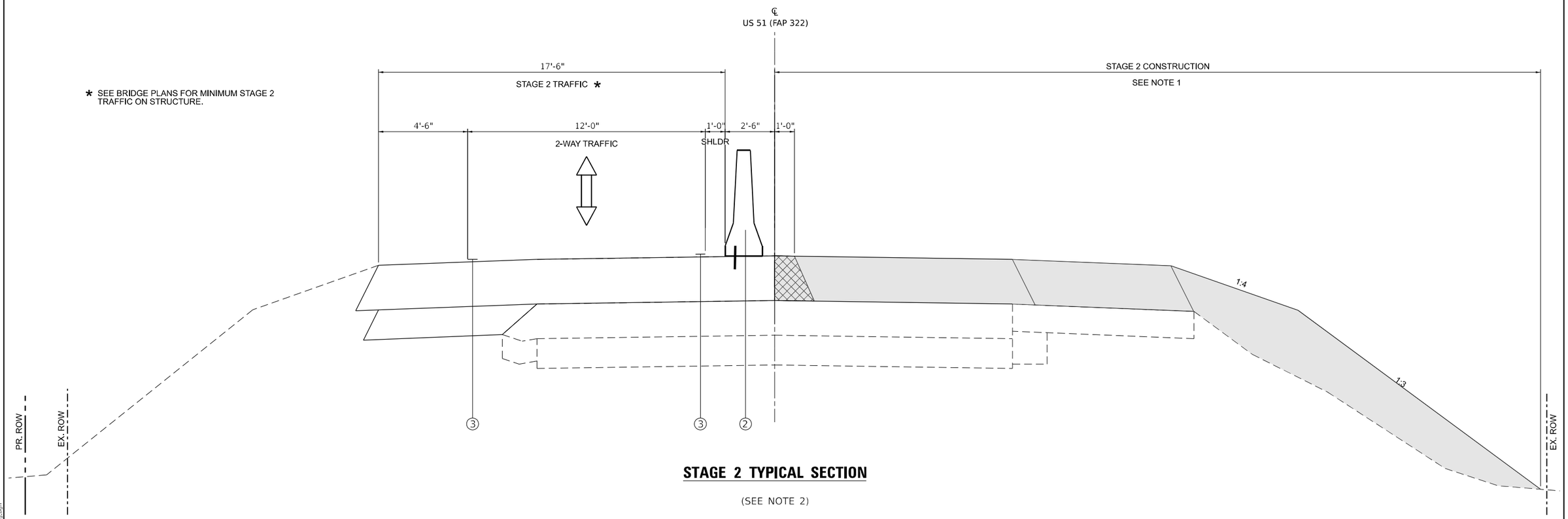

STAGE 2 TYPICAL SECTION

(SEE NOTE 2)

STAGE CONSTRUCTION LEGEND

1. PR. TEMPORARY CONCRETE BARRIER
2. PR. TEMPORARY CONCRETE BARRIER (PINNED)
3. PR. TEMPORARY PAVEMENT MARKING TAPE, TYPE IV, 4"

PAVEMENT REMOVAL

WORK COMPLETED DURING STAGE CONSTRUCTION (SEE NOTES)

MODEL: Default
FILE NAME: P:\2022\220197\A - US 51 over ICRR Bridge Replacement (Phase 1)\4 CADD - DWG\4.7 Train\CAD Sheets\0978937-int-typical-staging.dgn

TWM ENGINEERING GEOSPATIAL SERVICES	TWM, INC. WWW.TWM-INC.COM IL DESIGN FIRM LICENSE NO: 184-001220	USER NAME = bbillhartz	DESIGNED - TBP	REVISED -	STATE OF ILLINOIS DEPARTMENT OF TRANSPORTATION	STAGE 2 – STAGING TYPICAL SECTION US 51	F.A.P. RTE.	SECTION	COUNTY	TOTAL SHEETS	SHEET NO.
			DRAWN - BAB	REVISED -			322	3VB-3	JACKSON	124	55
		PLOT SCALE = 5.000 ' / in.	CHECKED - SJK	REVISED -			CONTRACT NO. 78937				
		PLOT DATE = 8/21/2025	DATE - 5/2025	REVISED -		SCALE: N.T.S. SHEET 1 OF 1 SHEETS STA. TO STA.	ILLINOIS	FED. AID PROJECT			

10-05-400-020

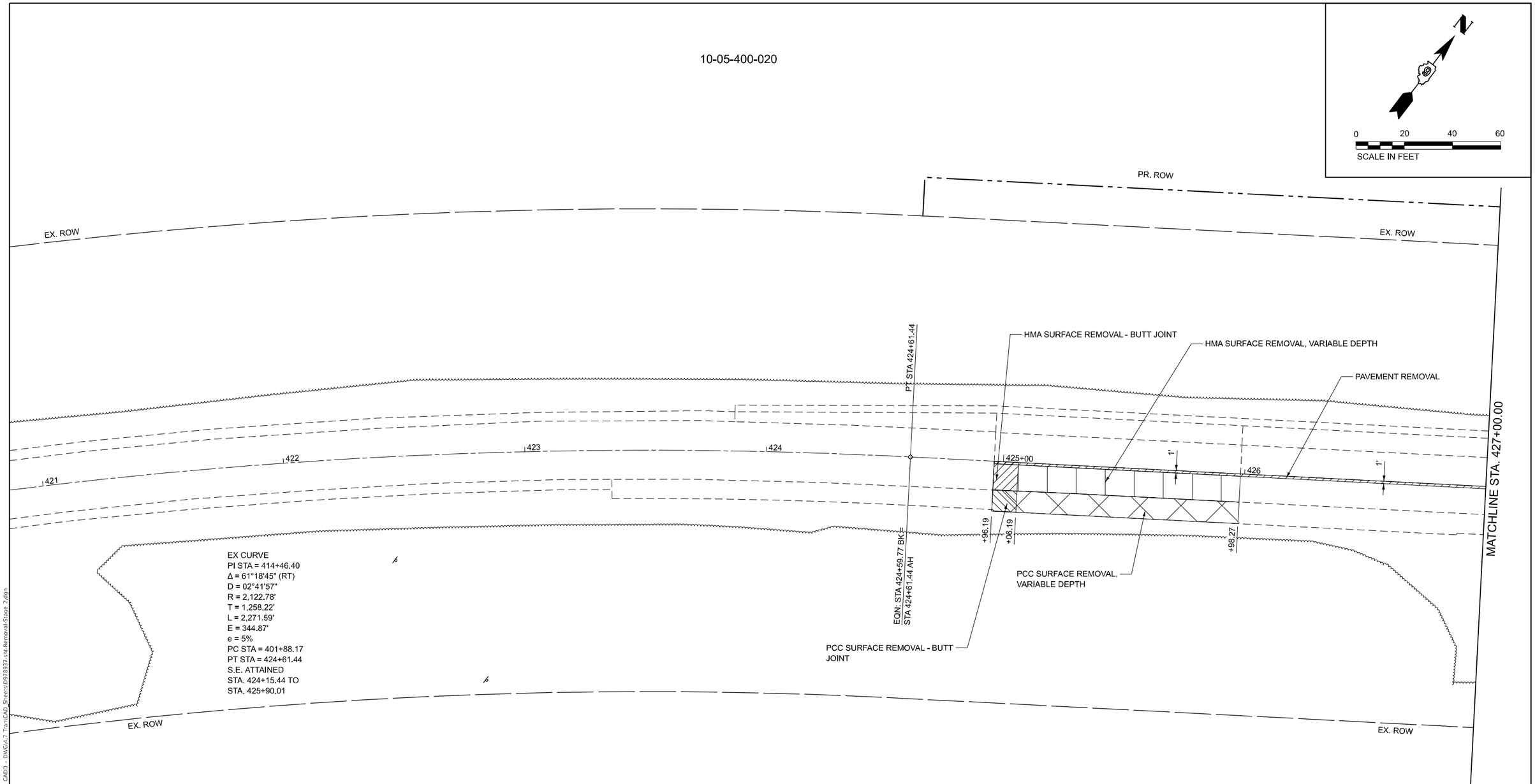

NOTES:

1. SEE STAGE 2 - STAGING PLAN FOR TRAFFIC CONTROL.

MODEL: Removal Sheet 1
FILE NAME: P:\0222\20197A - US 51 over ICRR Bridge Replacement (Phase 1)\4 CADD - DWG\4.7 Trans\CAD_Sheets\0978937-sht-Removal-Stage 2.dgn

TWM ENGINEERING GEOSPATIAL SERVICES	TWM, INC. WWW.TWM-INC.COM IL DESIGN FIRM LICENSE NO: 184-001220	USER NAME = bbillhartz	DESIGNED - TBP	REVISED -	STATE OF ILLINOIS DEPARTMENT OF TRANSPORTATION	STAGE 2 – REMOVAL PLAN US 51	F.A.P. RTE.	SECTION	COUNTY	TOTAL SHEETS	SHEET NO.
			DRAWN - BAB	REVISED -			322	3VB-3	JACKSON	124	56
		PLOT SCALE = 40.00000000 ' / in.	CHECKED - SJK	REVISED -			CONTRACT NO. 78937				
		PLOT DATE = 8/21/2025	DATE - 5/2025	REVISED -		SCALE: 1"=20' SHEET 1 OF 3 SHEETS STA. 433+36.07 TO STA. 427+00.00	ILLINOIS FED. AID PROJECT				

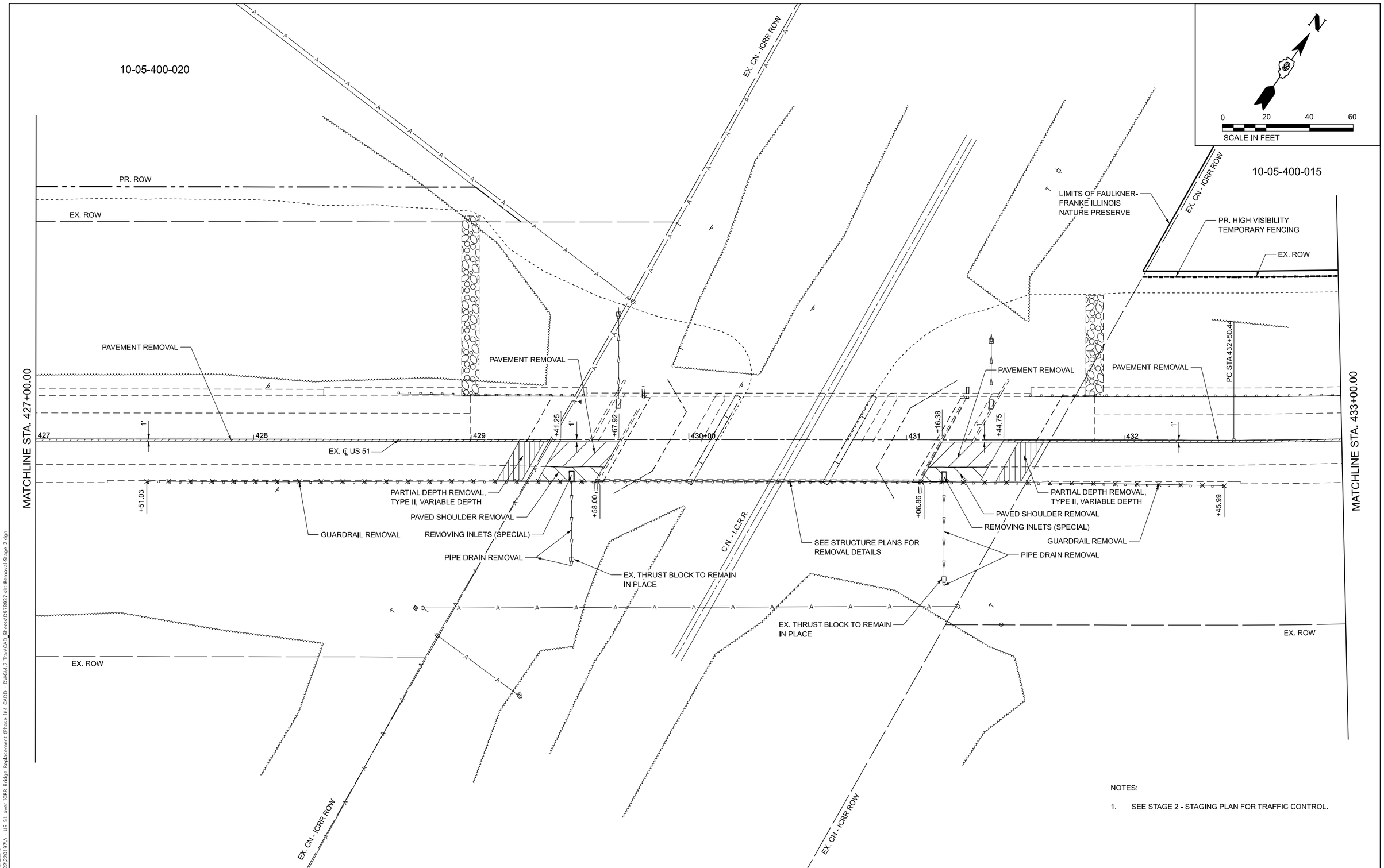

NOTES:

1. SEE STAGE 2 - STAGING PLAN FOR TRAFFIC CONTROL.

MODEL: Removal Sheet 2
FILE NAME: P:\2022\2019\A - US 51 over ICRR Bridge Replacement (Phase II)\4 CADD - DWG\4.7 Tron\CAD Sheets\D978937-crit-Removal-Stage 2.dgn

TWM ENGINEERING GEOSPATIAL SERVICES	TWM, INC. WWW.TWM-INC.COM IL DESIGN FIRM LICENSE NO: 184-001220	USER NAME = bbilhartz	DESIGNED - TBP	REVISED -	STATE OF ILLINOIS DEPARTMENT OF TRANSPORTATION
			DRAWN - BAB	REVISED -	
		PLOT SCALE = 40.00000000 ' / in.	CHECKED - SJK	REVISED -	
		PLOT DATE = 8/21/2025	DATE - 5/2025	REVISED -	

STAGE 2 – REMOVAL PLAN
US 51

SCALE: 1"=20' | SHEET 2 OF 3 SHEETS | STA. 427+00.00 TO STA. 433+00.00

F.A.P. RTE.	SECTION	COUNTY	TOTAL SHEETS	SHEET NO.
322	3VB-3	JACKSON	124	57
		CONTRACT NO. 78937		
		ILLINOIS	FED. AID PROJECT	

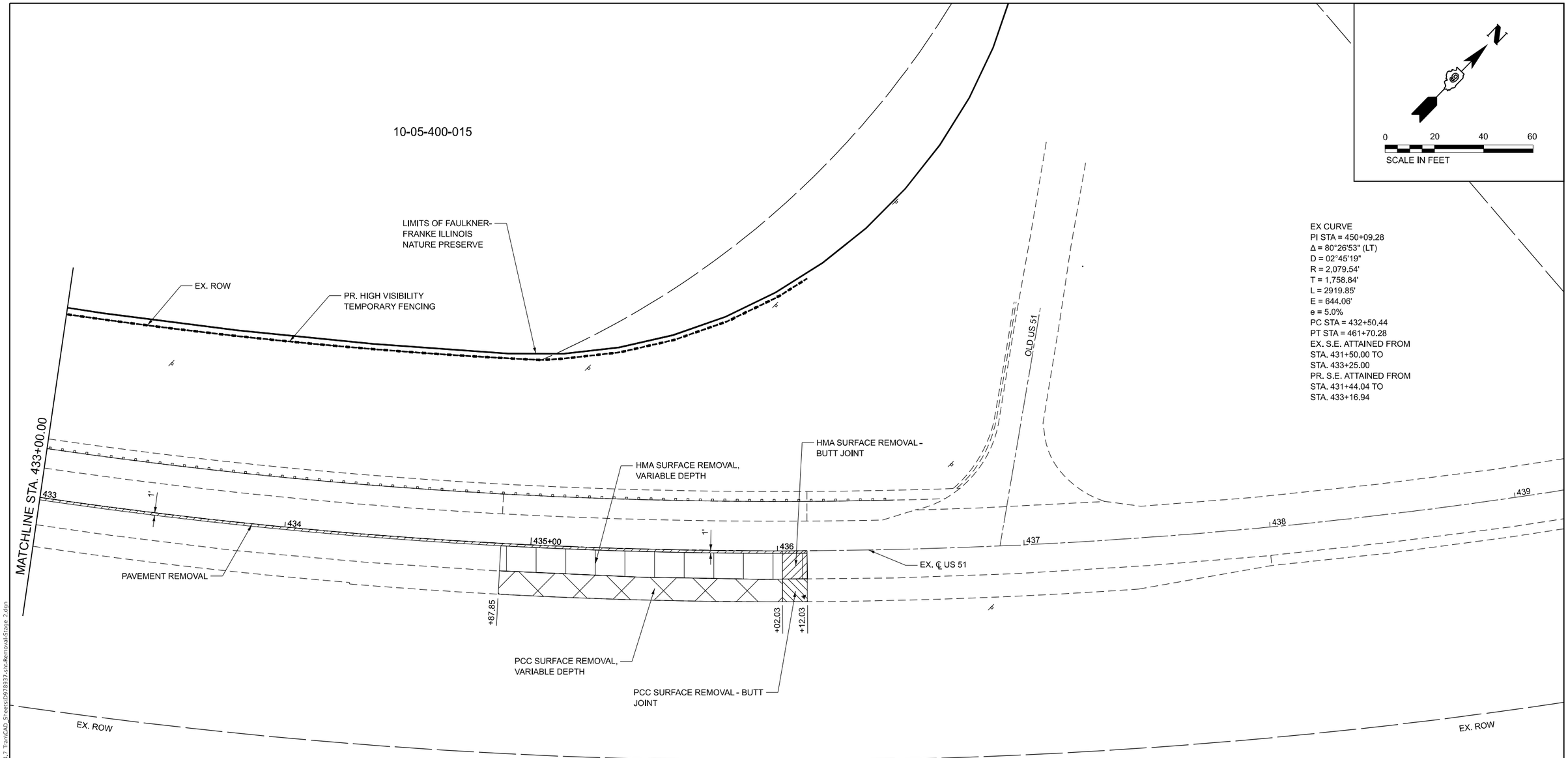

EX CURVE
PI STA = 450+09.28
Δ = 80°26'53" (LT)
D = 02°45'19"
R = 2,079.54'
T = 1,758.84'
L = 2919.85'
E = 644.06'
e = 5.0%
PC STA = 432+50.44
PT STA = 461+70.28
EX. S.E. ATTAINED FROM
STA. 431+50.00 TO
STA. 433+25.00
PR. S.E. ATTAINED FROM
STA. 431+44.04 TO
STA. 433+16.94

NOTES:

1. SEE STAGE 2 - STAGING PLAN FOR TRAFFIC CONTROL.

MODEL: Removal Sheet 3
FILE NAME: P:\2022\2019\A - US 51 over ICRR Bridge Replacement (Phase I)\4 CADD - DWG\4.7 Tra\CAD Sheets\D978937-sht-Removal-Stage 2.dgn

TWM ENGINEERING GEOSPATIAL SERVICES	TWM, INC. WWW.TWM-INC.COM IL DESIGN FIRM LICENSE NO: 184-001220	USER NAME = bbillhartz	DESIGNED - TBP	REVISED -	STATE OF ILLINOIS DEPARTMENT OF TRANSPORTATION	STAGE 2 – REMOVAL PLAN US 51	F.A.P. RTE.	SECTION	COUNTY	TOTAL SHEETS	SHEET NO.
			DRAWN - BAB	REVISED -			322	3VB-3	JACKSON	124	58
		PLOT SCALE = 40.000000 ' / in.	CHECKED - SJK	REVISED -					CONTRACT NO. 78937		
		PLOT DATE = 8/21/2025	DATE - 5/2025	REVISED -		SCALE: 1"=20' SHEET 3 OF 3 SHEETS STA. 433+00.00 TO STA. 438+00.00			ILLINOIS FED. AID PROJECT		

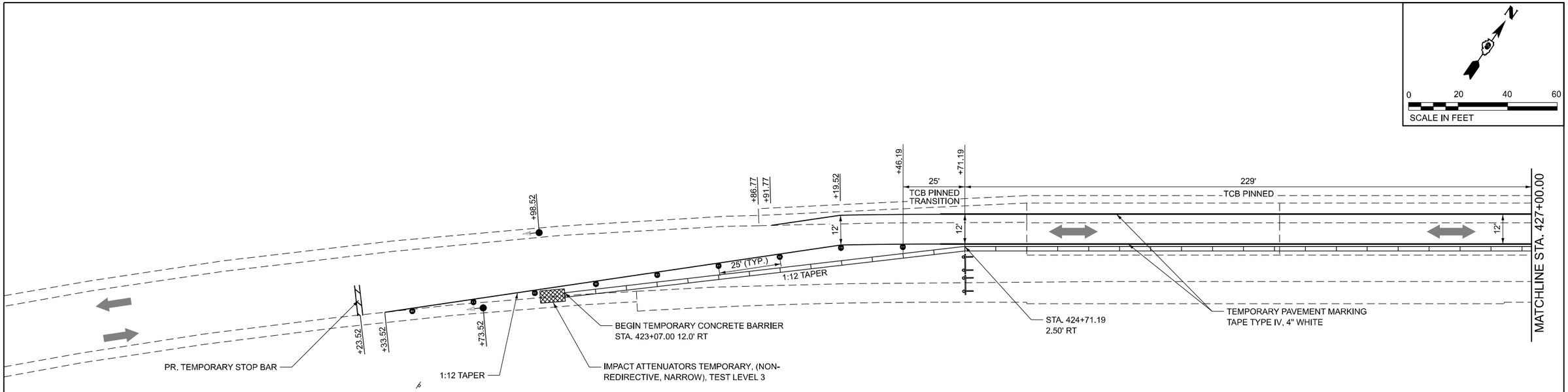

LEGEND

- TEMPORARY CONCRETE BARRIER
- IMPACT ATTENUATOR
- DRUMS W/ STEADY BI-DIRECTIONAL BURN LIGHTS
- TYPE III BARRICADE W/ FLASHING LIGHTS
- TEMPORARY TRAFFIC SIGNALS (SEE NOTE 5)

NOTES:

1. SEE HIGHWAY STANDARD 701321 FOR THE DETAILS NOT SHOWN.
2. ALL OFFSETS FOR THE TEMPORARY CONCRETE BARRIER ARE TO THE FACE OF THE TRAFFIC SIDE.
3. TRAFFIC CONTROL FOR STAGE 1 AND 2 SHALL BE PAID FOR AS TRAFFIC CONTROL AND PROTECTION, STANDARD 701321.
4. THE TEMPORARY RUMBLE STRIPS SHALL BE PLACED FOR USE DURING STAGE 1 AND 2 WITHOUT RELOCATION.
5. THE TEMPORARY TRAFFIC SIGNALS SHALL INCLUDE AN UNINTERRUPTABLE POWER SUPPLY, EXTENDED.
6. STAGE 2 PROPOSED WORK NOT SHOWN FOR CLARITY.

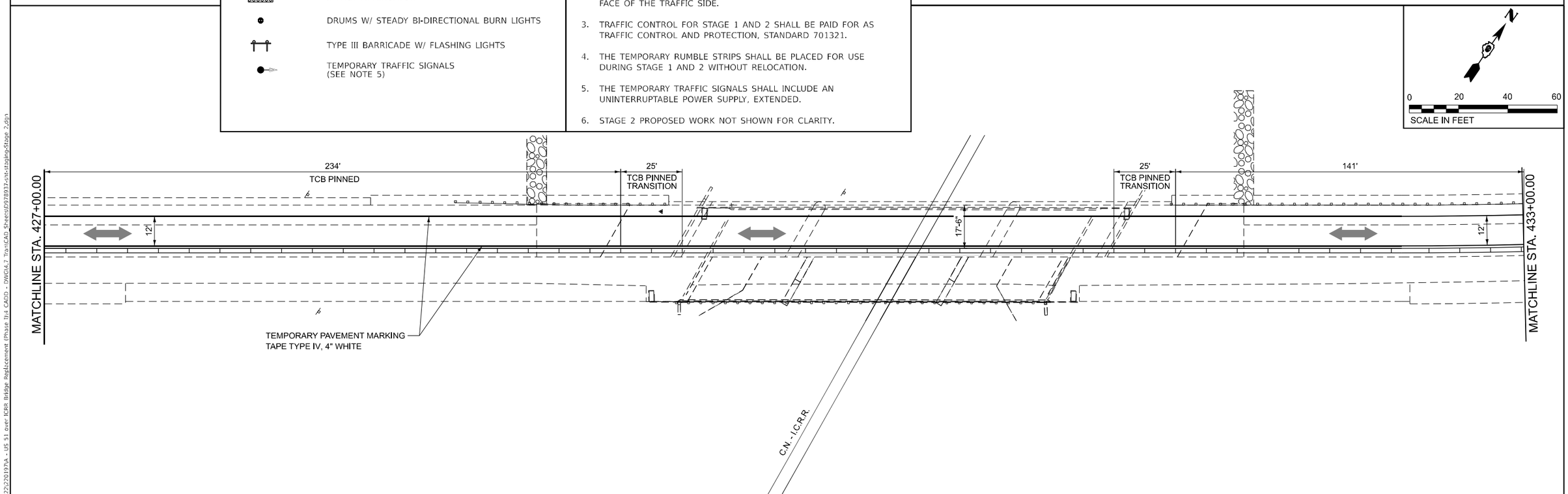

MODEL: Sheet 1
FILE NAME: P:\2022\20197A - US 51 over ICRR Bridge Replacement (Phase I)\4 CADD - DWG\4.7 Tra\CAD Sheets\D978937-sht-staging-Stage 2.dgn

TWM ENGINEERING GEOSPATIAL SERVICES	TWM, INC. WWW.TWM-INC.COM IL DESIGN FIRM LICENSE NO: 184-001220	USER NAME = bbillhartz	DESIGNED - TBP	REVISED -	STATE OF ILLINOIS DEPARTMENT OF TRANSPORTATION
			DRAWN - BAB	REVISED -	
		PLOT SCALE = 40.000 ' / in.	CHECKED - SJK	REVISED -	
		PLOT DATE = 8/21/2025	DATE - 5/2025	REVISED -	

STAGE 2 – STAGING PLAN
US 51

SCALE: 1"=20' | SHEET 1 OF 2 SHEETS | STA. 421+00.00 TO STA. 433+00.00

F.A.P. RTE.	SECTION	COUNTY	TOTAL SHEETS	SHEET NO.
322	3VB-3	JACKSON	124	59
		CONTRACT NO. 78937		
		ILLINOIS	FED. AID PROJECT	

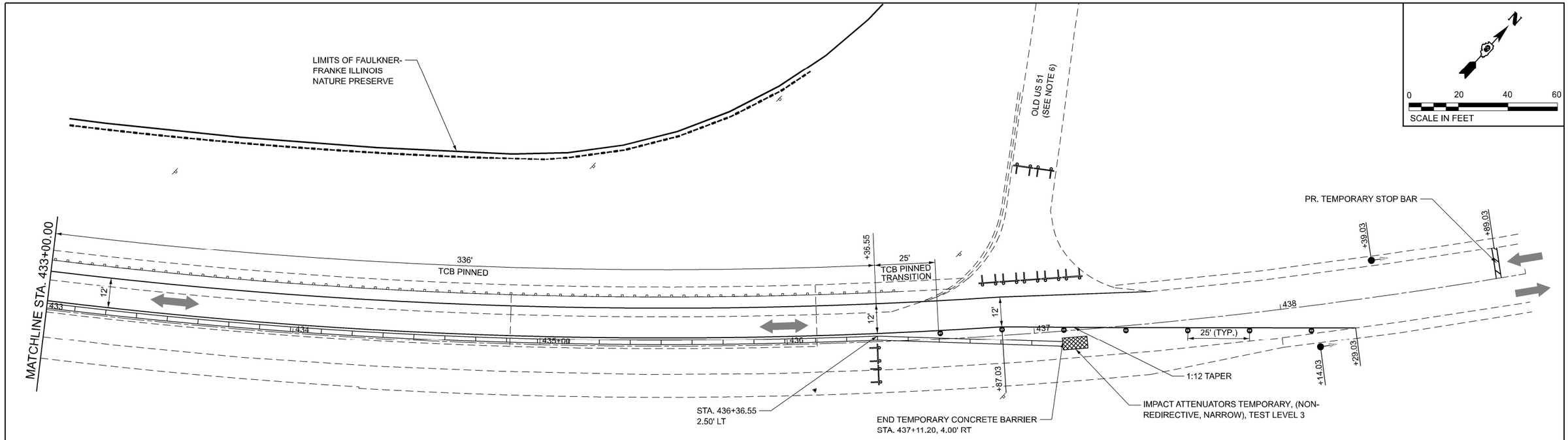

LEGEND

- TEMPORARY CONCRETE BARRIER
- IMPACT ATTENUATOR
- DRUMS W/ STEADY BI-DIRECTIONAL BURN LIGHTS
- TYPE III BARRICADE W/ FLASHING LIGHTS
- TEMPORARY TRAFFIC SIGNALS (SEE NOTE 5)

NOTES:

1. SEE HIGHWAY STANDARD 701321 FOR THE DETAILS NOT SHOWN.
2. ALL OFFSETS FOR THE TEMPORARY CONCRETE BARRIER ARE TO THE FACE OF THE TRAFFIC SIDE.
3. TRAFFIC CONTROL FOR STAGE 1 AND 2 SHALL BE PAID FOR AS TRAFFIC CONTROL AND PROTECTION, STANDARD 701321.
4. THE TEMPORARY RUMBLE STRIPS SHALL BE PLACED FOR USE DURING STAGE 1 AND 2 WITHOUT RELOCATION.
5. THE TEMPORARY TRAFFIC SIGNALS SHALL INCLUDE AN UNINTERRUPTABLE POWER SUPPLY, EXTENDED.
6. TEMPORARILY CLOSE OLD US 51 ACCORDING TO HIGHWAY STANDARD BLR 21-9.
7. STAGE 2 PROPOSED WORK NOT SHOWN FOR CLARITY.

MODEL: Sheet 2
FILE NAME: P:\2022\20197A - US 51 over ICRR Bridge Replacement (Phase I)\4 CADD - DWG\4.7 Tcn\CAD Sheets\D978937-sht-staging-Stage 2.dgn

TWM ENGINEERING & GEOSPATIAL SERVICES	TWM, INC. WWW.TWM-INC.COM IL DESIGN FIRM LICENSE NO: 184-001220	USER NAME = bbillhartz	DESIGNED - TBP	REVISED -	STATE OF ILLINOIS DEPARTMENT OF TRANSPORTATION
			DRAWN - BAB	REVISED -	
		PLOT SCALE = 40.000 ' / in.	CHECKED - SJK	REVISED -	
		PLOT DATE = 8/21/2025	DATE - 5/2025	REVISED -	

STAGE 2 – STAGING PLAN
US 51

SCALE: 1"=20' | SHEET 2 OF 2 SHEETS | STA. 433+00.00 TO STA. 445+00.00

F.A.P. RTE.	SECTION	COUNTY	TOTAL SHEETS	SHEET NO.
322	3VB-3	JACKSON	124	60

CONTRACT NO. 78937

ILLINOIS | FED. AID PROJECT

10-05-400-020

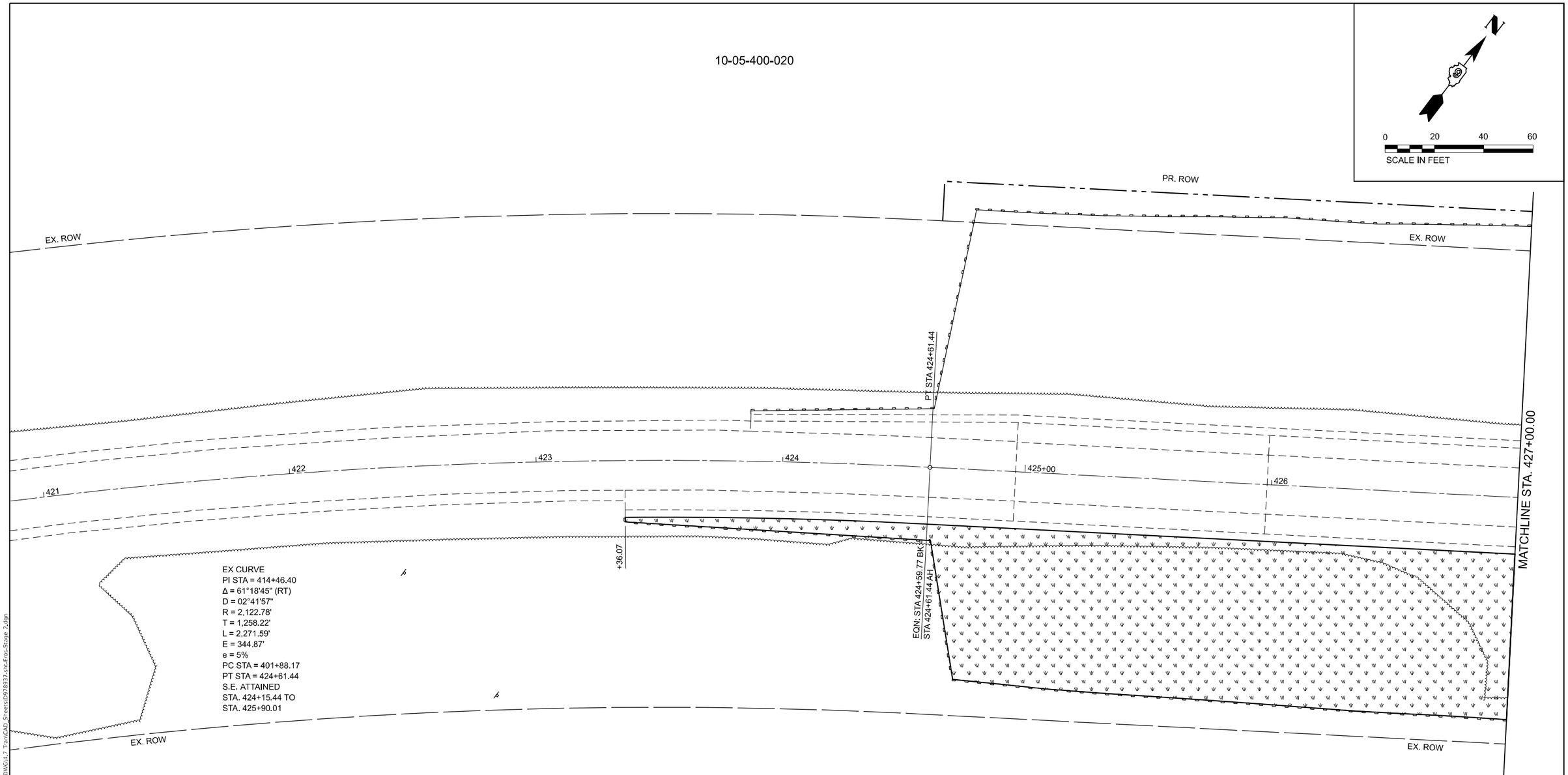

LEGEND

PR. SEEDING CLASS, 2A AND
PR. SEEDING, CLASS 7
W/ FERTILIZER NUTRIENTS
PR. EROSION CONTROL BLANKET

PR. PERIMETER EROSION BARRIER

PR. STONE RIPRAP, CLASS A4

MODEL: Erosion Control Sheet 1
FILE NAME: P:\2022\2019\A - US 51 over ICRR Bridge Replacement (Phase II)\4 CADD - DWG\4.7 Tron\CAD Sheets\0978937-cnt-Eros-Stage 2.dgn

TWM ENGINEERING GEOSPATIAL SERVICES	TWM, INC. WWW.TWM-INC.COM IL DESIGN FIRM LICENSE NO: 184-001220	USER NAME = bbillhartz	DESIGNED - TBP	REVISED -	STATE OF ILLINOIS DEPARTMENT OF TRANSPORTATION
			DRAWN - BAB	REVISED -	
		PLOT SCALE = 40.00000000 ' / in.	CHECKED - SJK	REVISED -	
		PLOT DATE = 8/21/2025	DATE - 5/2025	REVISED -	

STAGE 2 – EROSION CONTROL PLAN
US 51

SCALE: 1"=20' | SHEET 1 OF 3 SHEETS | STA. 433+36.07 TO STA. 427+00.00

F.A.P. RTE.	SECTION	COUNTY	TOTAL SHEETS	SHEET NO.
322	3VB-3	JACKSON	124	61
		CONTRACT NO. 78937		
		ILLINOIS	FED. AID PROJECT	

10-05-400-020

10-05-400-015

EX. CN - ICRR ROW

PR. ROW

EX. ROW

LIMITS OF FAULKNER-
FRANKE ILLINOIS
NATURE PRESERVE

MATCHLINE STA. 427+00.00

MATCHLINE STA. 433+00.00

427 | 428 | 429 | 430+00 | 431 | 432

EX. ℄ US 51

PC STA 432+50.44

A A

A A

C.N. - I.C.R.R.

8' X 70'

8' X 61'

EX. ROW

EX. ROW

EX. ROW

EX. CN - ICRR ROW

0 20 40 60
SCALE IN FEET

N

℄
STA. 428+99.28 RT
STA. 431+86.72 RT

2.0' 2.0' 2.0' 2.0'

PR. GRADE

2 1 1 2

16"

BEDDING

PR. FILTER FABRIC

PR. STONE RIPRAP,
CLASS A4

SECTION A–A

STONE RIPRAP, CLASS A4 DETAIL

LEGEND

PR. SEEDING CLASS, 2A AND
PR. SEEDING, CLASS 7
W/ FERTILIZER NUTRIENTS
PR. EROSION CONTROL BLANKET

PR. PERIMETER EROSION BARRIER

PR. STONE RIPRAP, CLASS A4

MODEL: Erosion Control Sheet 2
FILE NAME: P:\2022\2019\A - US 51 over ICRR Bridge Replacement (Phase II)\4 CADD - DWG\4.7 Tsn\CAD Sheets\D978937-sht-Eros-Stage 2.dgn

TWM ENGINEERING GEOSPATIAL SERVICES	TWM, INC. WWW.TWM-INC.COM IL DESIGN FIRM LICENSE NO: 184-001220	USER NAME = bbilhartz	DESIGNED - TBP	REVISED -	STATE OF ILLINOIS DEPARTMENT OF TRANSPORTATION
			DRAWN - BAB	REVISED -	
		PLOT SCALE = 40.00000000 ' / in.	CHECKED - SJK	REVISED -	
		PLOT DATE = 8/21/2025	DATE - 5/2025	REVISED -	

STAGE 2 – EROSION CONTROL PLAN
US 51

SCALE: 1"=20' | SHEET 2 OF 3 SHEETS | STA. 427+00.00 TO STA. 433+00.00

F.A.P. RTE.	SECTION	COUNTY	TOTAL SHEETS	SHEET NO.
322	3VB-3	JACKSON	124	62
		CONTRACT NO. 78937		
		ILLINOIS	FED. AID PROJECT	

10-05-400-015

EX. ROW

LIMITS OF FAULKNER-
FRANKE ILLINOIS
NATURE PRESERVE

MATCHLINE STA. 433+00.00

OLD US 51

433

434

435+00

436

437

438

439

EX. ℄ US 51

+99.28

EX. ROW

EX. ROW

0 20 40 60
SCALE IN FEET

EX CURVE
PI STA = 450+09.28
Δ = 80°26'53" (LT)
D = 02°45'19"
R = 2,079.54'
T = 1,758.84'
L = 2919.85'
E = 644.06'
e = 5.0%
PC STA = 432+50.44
PT STA = 461+70.28
EX. S.E. ATTAINED FROM
STA. 431+50.00 TO
STA. 433+25.00
PR. S.E. ATTAINED FROM
STA. 431+44.04 TO
STA. 433+16.94

LEGEND

PR. SEEDING CLASS, 2A AND
PR. SEEDING, CLASS 7
W/ FERTILIZER NUTRIENTS
PR. EROSION CONTROL BLANKET

PR. PERIMETER EROSION BARRIER

PR. STONE RIPRAP, CLASS A4

MODEL: Erosion Control Sheet 3
FILE NAME: P:\2022\22019\A - US 51 over ICRR Bridge Replacement (Phase I)\4 CADD - DWG\4.7 Tsn\CAD Sheets\0978937-sht-Eros-Stage 2.dgn

TWM ENGINEERING & GEOSPATIAL SERVICES	TWM, INC. WWW.TWM-INC.COM IL DESIGN FIRM LICENSE NO: 184-001220	USER NAME = bbillhartz	DESIGNED - TBP	REVISED -	STATE OF ILLINOIS DEPARTMENT OF TRANSPORTATION	STAGE 2 – EROSION CONTROL PLAN US 51	F.A.P. RTE.	SECTION	COUNTY	TOTAL SHEETS / SHEET NO.
			DRAWN - BAB	REVISED -			322	3VB-3	JACKSON	124 / 63
		PLOT SCALE = 40.000000 ' / in.	CHECKED - SJK	REVISED -					CONTRACT NO. 78937	
		PLOT DATE = 8/21/2025	DATE - 5/2025	REVISED -		SCALE: 1"=20' SHEET 3 OF 3 SHEETS STA. 433+00.00 TO STA. 438+00.00			ILLINOIS FED. AID PROJECT	

NOTES

1. STAGE TYPICAL IS GENERIC FOR STAGE 3 WORK.
2. SEE PROPOSED TYPICAL SECTIONS FOR CONSTRUCTION DETAILS.
3. SEE HIGHWAY STANDARDS 701306 AND 701311 FOR DETAILS NOT SHOWN.

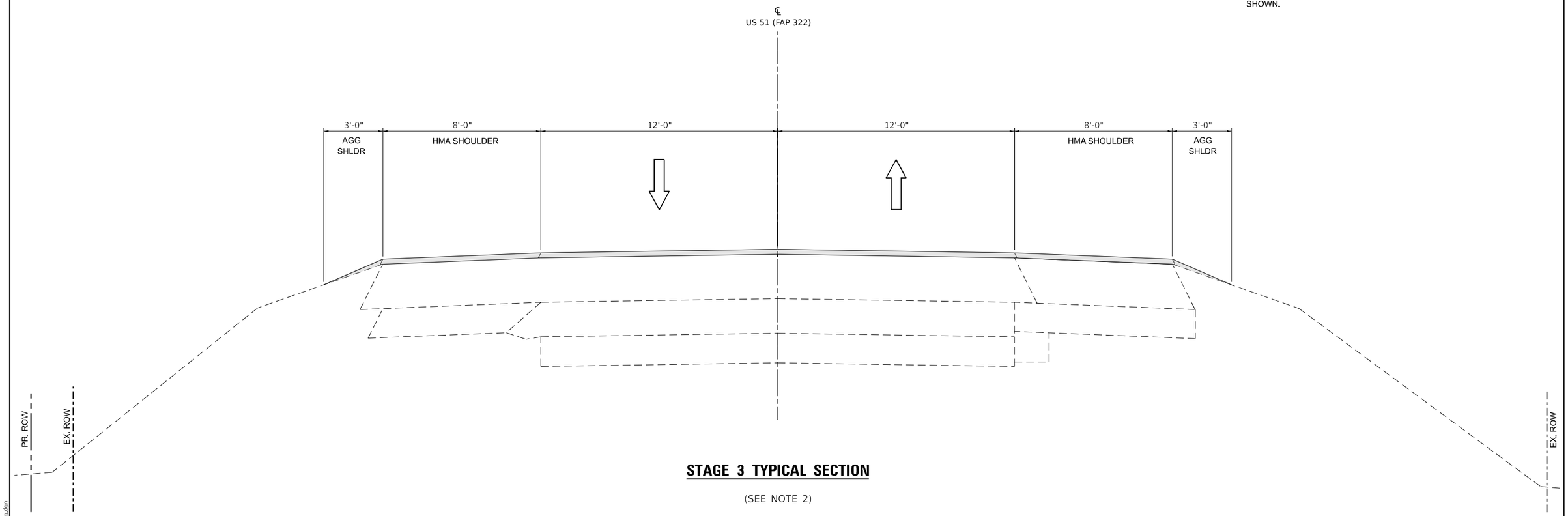

STAGE 3 TYPICAL SECTION

(SEE NOTE 2)

STAGE CONSTRUCTION LEGEND

① PR. TEMPORARY CONCRETE BARRIER
② PR. TEMPORARY CONCRETE BARRIER (PINNED)
③ PR. TEMPORARY PAVEMENT MARKING TAPE, TYPE IV, 4"

WORK COMPLETED DURING STAGE CONSTRUCTION (SEE NOTES)

MODEL: Default
FILE NAME: P:\2022\220197A - US 51 over ICRR Bridge Replacement (Phase 1)\4 CADD - DWG\4.7 Train\CAD Sheets\078937-sht-typicals-staging.dgn

TWM ENGINEERING GEOSPATIAL SERVICES	TWM, INC. WWW.TWM-INC.COM IL DESIGN FIRM LICENSE NO: 184-001220	USER NAME = bbillhartz	DESIGNED - TBP	REVISED -	STATE OF ILLINOIS DEPARTMENT OF TRANSPORTATION	STAGE 3 – STAGING TYPICAL SECTION US 51			F.A.P. RTE.	SECTION	COUNTY	TOTAL SHEETS	SHEET NO.
			DRAWN - BAB	REVISED -					322	3VB-3	JACKSON	124	64
		PLOT SCALE = 5.000 ' / in.	CHECKED - SJK	REVISED -							CONTRACT NO. 78937		
		PLOT DATE = 8/21/2025	DATE - 5/2025	REVISED -		SCALE: N.T.S.	SHEET 1 OF 1 SHEETS	STA. TO STA.		ILLINOIS	FED. AID PROJECT		

COORDINATE DATA										
POINT #	NORTHING	EASTING	STATION	OFFSET		POINT #	NORTHING	EASTING	STATION	OFFSET
AS3	432755.656'	724324.274'	424+61.44	100 LT		AS13	433674.589'	725143.232'	6+20.70	30 LT
AS4	432768.031'	724315.797'	424+61.44	115 LT		AS24	432590.658'	724437.303'	424+61.44	100 RT
AS5	433001.830'	724657.092'	428+75.14	115 LT		AS25	432826.975'	724782.275'	428+79.60	100 RT
AS6	433000.515'	724681.715'	428+94.71	100 LT		AS26	432855.590'	724779.810'	428+93.73	75 RT
AS7	433055.895'	724762.557'	429+92.70	100 LT		AS28	432973.996'	724970.352'	431+17.85	85 RT
AS8	433027.280'	724765.021'	429+78.56	75 LT		AS29	432985.152'	724969.391'	431+23.50	75 RT
AS10	433157.132'	724954.577'	432+08.33	75 LT		AS33	433048.931'	725079.740'	432+50.44	85 RT
AS12	433329.014'	725179.795'	435+00.89	75 LT		AS34	433180.929'	724989.317'	432+50.44	75 LT

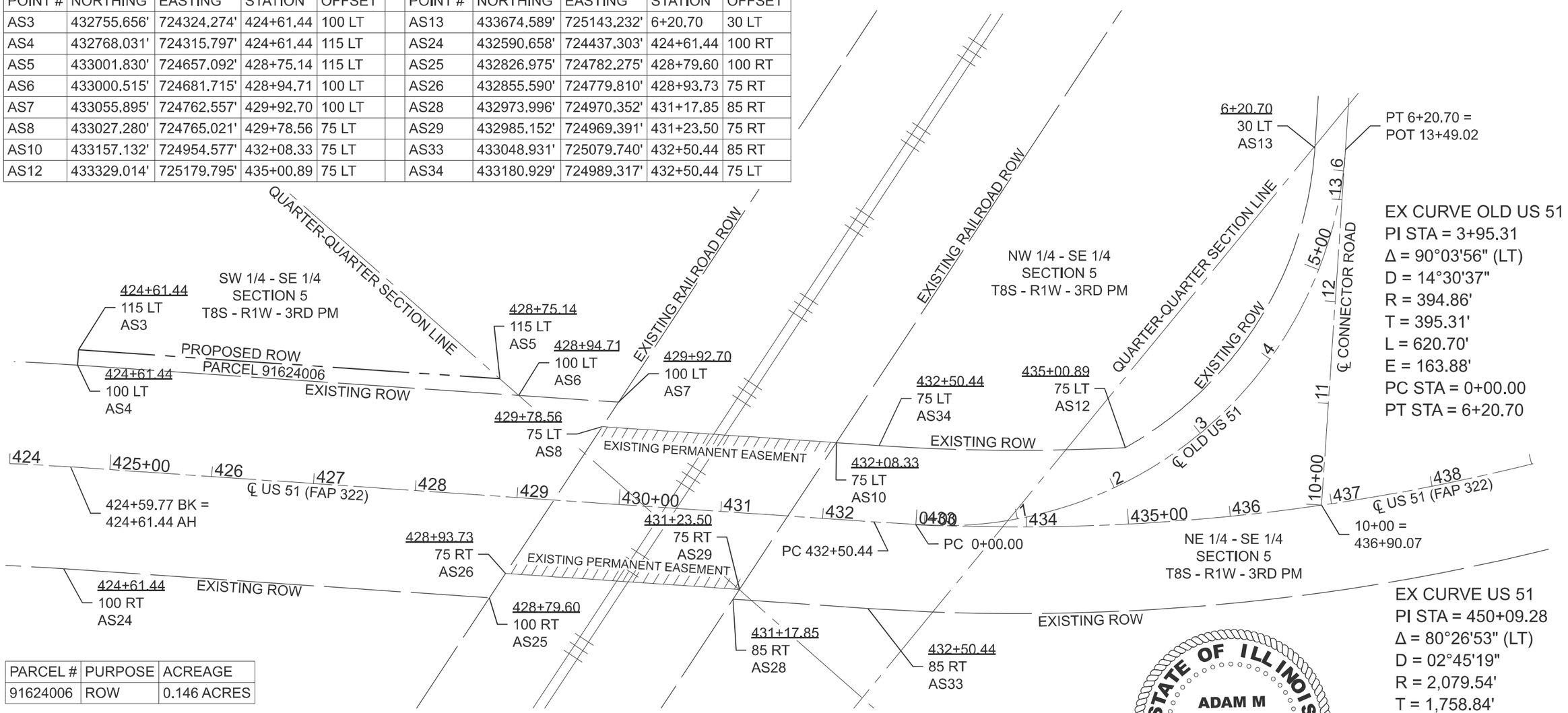

PARCEL #	PURPOSE	ACREAGE
91624006	ROW	0.146 ACRES

ALIGNMENT INFO		
CENTERLINE US 51 (FAP 332)		
POINT #	NORTHING	EASTING
PC 401+88.17	430710.127'	723468.276'
PT 424+59.77 = PT 424+61.44	432673.157'	724380.789'
PC 432+50.44	433119.055'	725031.703'
PT 461+70.29	435708.917'	725743.297'
COORDINATES BASED ON NAD83 (97ADJ) ILLINOIS EAST ZONE		

CENTERLINE OLD US 51		
POINT #	NORTHING	EASTING
POT 10+00	433403.863'	725365.536'
POT 13+49.02	433691.571'	725167.962'

CENTERLINE CONNECTOR (US 51 TO OLD US 51)		
POINT #	NORTHING	EASTING
PC 0+00	433142.286'	725065.615'
PT 6+20.70	433691.571'	725167.962'

N

0 100 200

SCALE IN FEET

STATE OF ILLINOIS
ADAM M STOCKDALE
#035-003955
CARBONDALE
PROFESSIONAL LAND SURVEYOR

ADAM M STOCKDALE
ILLINOIS PROFESSIONAL LAND SURVEYOR

CURRENT LICENSE EXPIRES 11/30/2026
THIS PROFESSIONAL SERVICE CONFORMS TO THE CURRENT
ILLINOIS MINIMUM STANDARDS FOR A BOUNDARY SURVEY

MODEL: US 51 [Sheet]
FILE NAME: c:\pw_work\pwidot\stockdaleam\d1154865\D978937-Sht K-ROW.dgn

USER NAME = adam.stockdale	DESIGNED -	REVISED -	
	DRAWN -	REVISED -	
	CHECKED -	REVISED -	
PLOT DATE = 8/28/2025	DATE -	REVISED -	

STATE OF ILLINOIS
DEPARTMENT OF TRANSPORTATION

RIGHT OF WAY PLANS

PROJECT
SCALE: 1" = 100FT | SHEET 1 OF 1 SHEETS | STA. 424+61 TO STA. 438+00
JOB NO. R-99-016-24

F.A.P. RTE.	SECTION	COUNTY	TOTAL SHEETS	SHEET NO.
322	3VB-3	JACKSON	124	65

US 51: SECTION 5 - T8S - R1W
CONTRACT NO. 78937
FED. ROAD DIST. NO. | ILLINOIS | FED. AID PROJECT

10-05-400-020

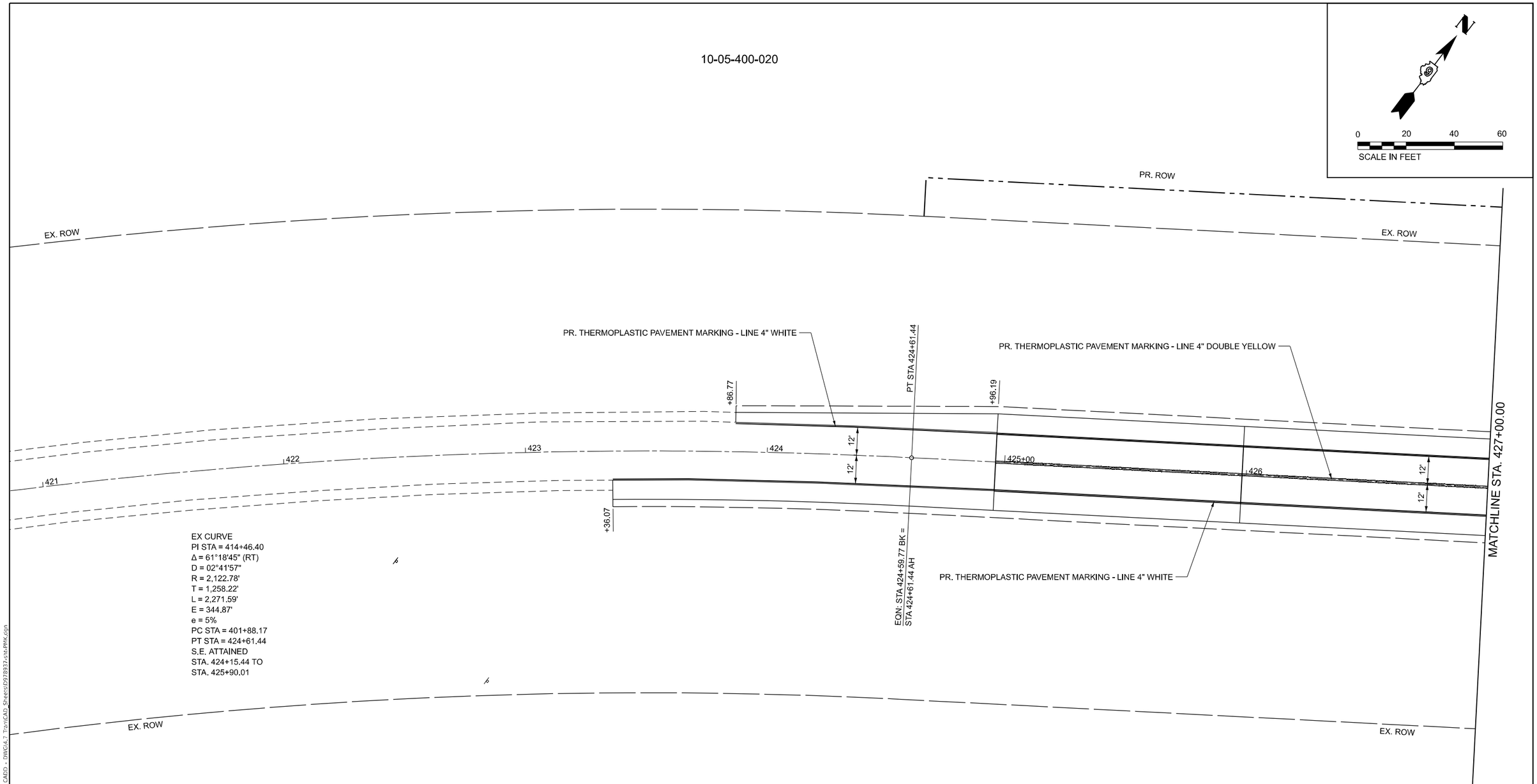

MODEL: Pavement Marding Sheet 1
FILE NAME: P:\2022\2019\A - US 51 over ICRR Bridge Replacement (Phase 1)\4 CADD - DWG\4.7 Tom\CAD Sheets\0978937-cnt-PMK.dgn

TWM ENGINEERING GEOSPATIAL SERVICES	TWM, INC. WWW.TWM-INC.COM IL DESIGN FIRM LICENSE NO: 184-001220	USER NAME = bbilihartz	DESIGNED - TBP	REVISED -	STATE OF ILLINOIS DEPARTMENT OF TRANSPORTATION	PAVEMENT MARKING AND SIGNAGE PLAN US 51	F.A.P. RTE.	SECTION	COUNTY	TOTAL SHEETS	SHEET NO.
			DRAWN - BAB	REVISED -			322	3VB-3	JACKSON	124	66
		PLOT SCALE = 40.00000000 ' / in.	CHECKED - SJK	REVISED -			CONTRACT NO. 78937				
		PLOT DATE = 8/21/2025	DATE - 5/2025	REVISED -		SCALE: 1"=20' SHEET 1 OF 3 SHEETS STA. 433+36.07 TO STA. 427+00.00	ILLINOIS FED. AID PROJECT				

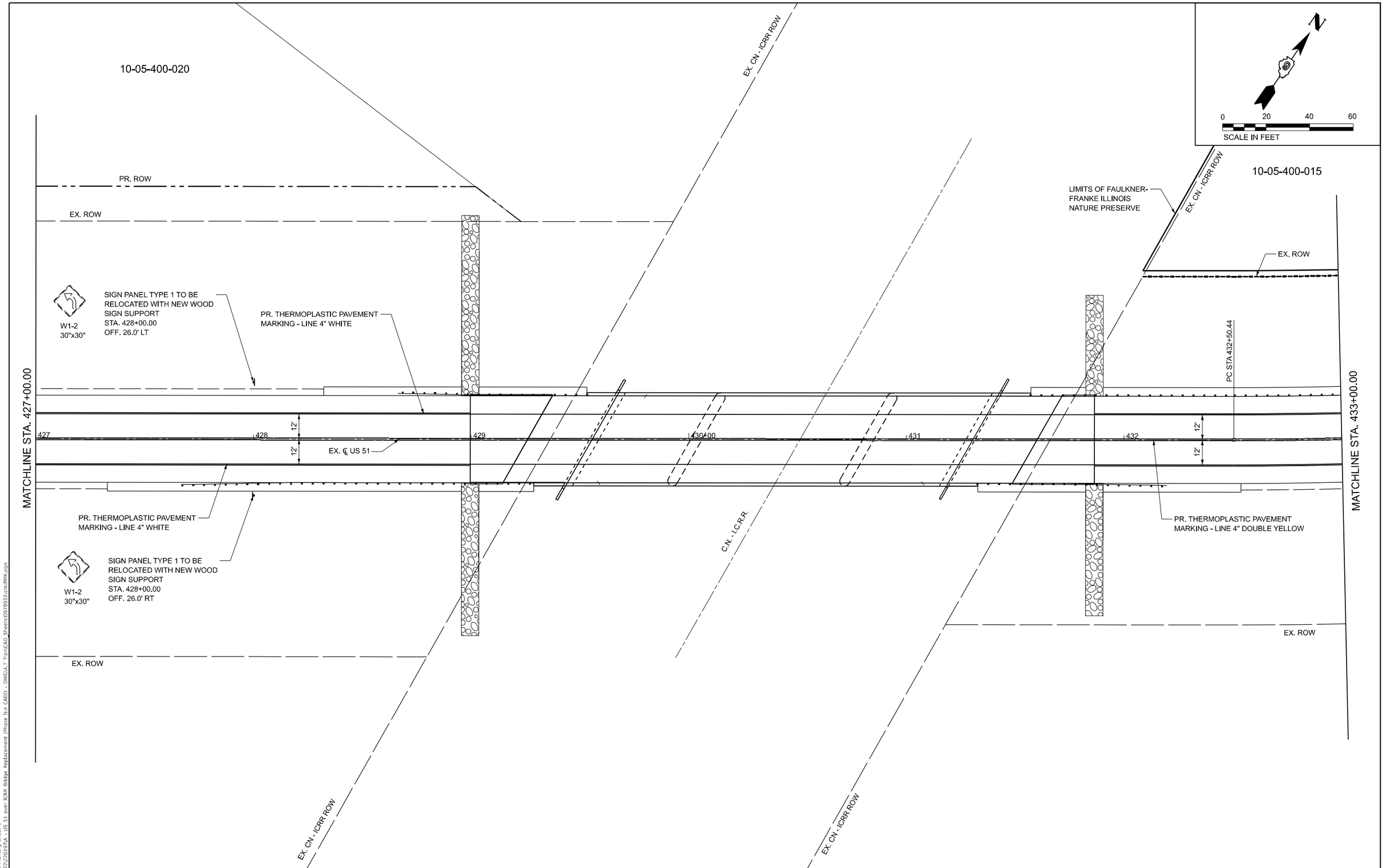

MODEL: Pavement Marking Sheet 2
FILE NAME: P:\2022\220197A - US 51 over ICRR Bridge Replacement (Phase 1)\4 CADD - DWG\4.7 Tech\CAD Sheets\078937-sht-PMK.dgn

TWM ENGINEERING GEOSPATIAL SERVICES	TWM, INC. WWW.TWM-INC.COM IL DESIGN FIRM LICENSE NO: 184-001220	USER NAME = bbillhartz	DESIGNED - TBP	REVISED -	STATE OF ILLINOIS DEPARTMENT OF TRANSPORTATION	PAVEMENT MARKING AND SIGNAGE PLAN US 51	F.A.P. RTE.	SECTION	COUNTY	TOTAL SHEETS	SHEET NO.
			DRAWN - BAB	REVISED -			322	3VB-3	JACKSON	124	67
		PLOT SCALE = 40.00000000 ' / in.	CHECKED - SJK	REVISED -			CONTRACT NO. 78937				
		PLOT DATE = 8/21/2025	DATE - 5/2025	REVISED -		SCALE: 1"=20' SHEET 2 OF 3 SHEETS STA. 427+00.00 TO STA. 433+00.00	ILLINOIS FED. AID PROJECT				

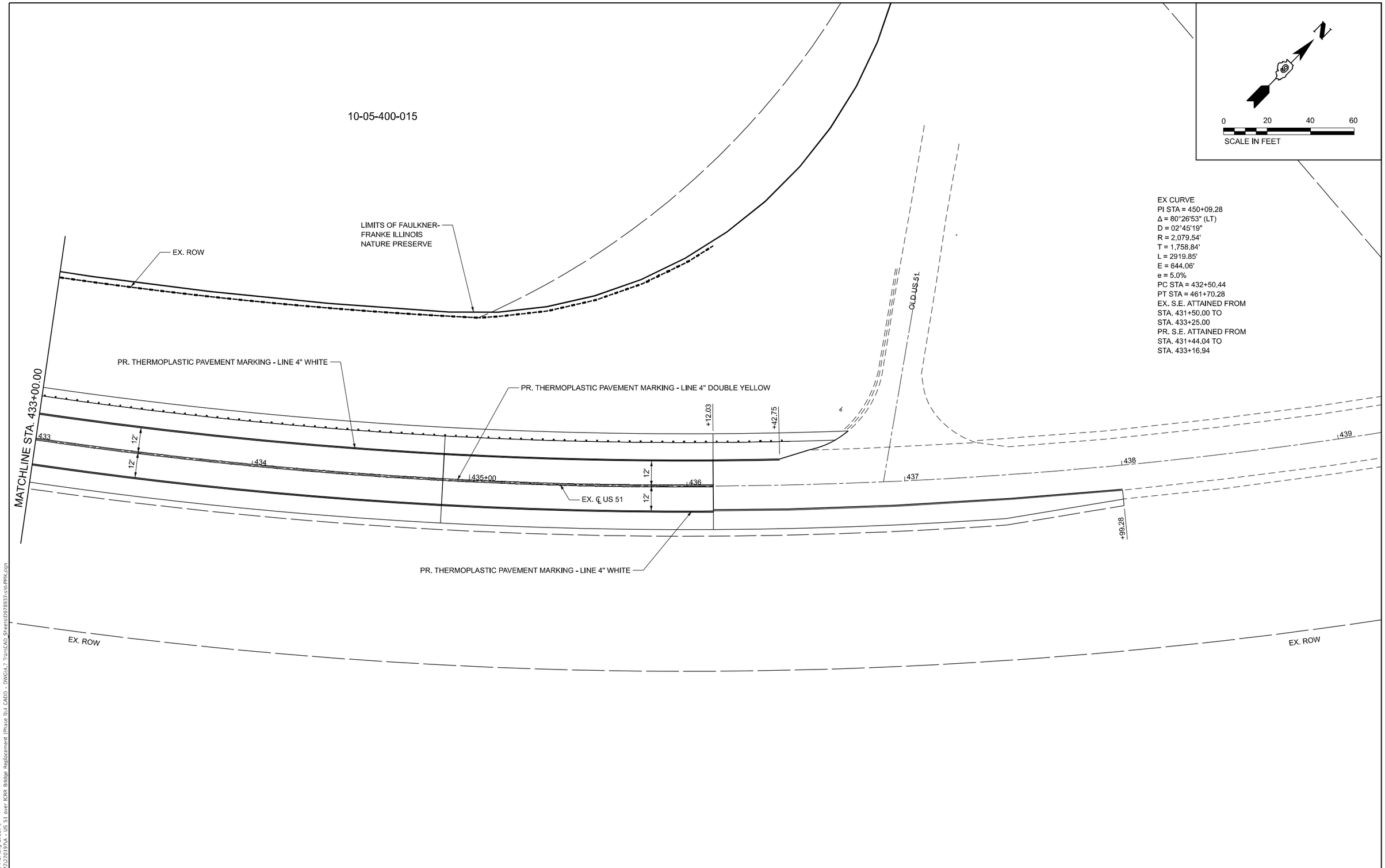

EX CURVE
PI STA = 450+09.28
Δ = 80°26'53" (LT)
D = 02°45'19"
R = 2,079.54'
T = 1,758.84'
L = 2919.85'
E = 644.06'
e = 5.0%
PC STA = 432+50.44
PT STA = 461+70.28
EX. S.E. ATTAINED FROM
STA. 431+50.00 TO
STA. 433+25.00
PR. S.E. ATTAINED FROM
STA. 431+44.04 TO
STA. 433+16.94

MODEL: Pavement Marking Sheet 3
FILE NAME: P:\2022\20197A - US 51 over ICRR Bridge Replacement (Phase II)\4 CADD - DWG\4.7 Trans\CAD Sheets\D978937-sn-PMK.dgn

TWM ENGINEERING GEOSPATIAL SERVICES	TWM, INC. WWW.TWM-INC.COM IL DESIGN FIRM LICENSE NO: 184-001220	USER NAME = bbillhartz	DESIGNED - TBP	REVISED -	STATE OF ILLINOIS DEPARTMENT OF TRANSPORTATION	PAVEMENT MARKING AND SIGNAGE PLAN US 51	F.A.P. RTE.	SECTION	COUNTY	TOTAL SHEETS	SHEET NO.
			DRAWN - BAB	REVISED -			322	3VB-3	JACKSON	124	68
		PLOT SCALE = 40.000000 ' / in.	CHECKED - SJK	REVISED -					CONTRACT NO. 78937		
		PLOT DATE = 8/21/2025	DATE - 5/2025	REVISED -		SCALE: 1"=20' SHEET 3 OF 3 SHEETS STA. 433+00.00 TO STA. 438+00.00			ILLINOIS FED. AID PROJECT		

Bench Mark: Chiseled "square" on N.W. wingwall of S.N. 039-0052, Elev. 441.75

Existing Structure: SN 039-0052 was built in 1983 as F.A. Rte 718, Sect. 3VB-2. It is a three-span PPC deck-beam bridge supported by reinforced concrete stub abutments and hammerhead piers supported on steel H-Piles. The back-to-back abutment length is 151'-0" and the out-to-out deck width is 38'-0". The structure is skewed 29°37'40" left forward. Staged construction will be utilized to maintain traffic.

Salvage: None

SEISMIC DATA

2023 AASHTO Seismic Hazard
Site Class C
Latitude 37.85° N, Longitude 89.23° W
Operational Category: Recovery
Performance Level: Operational
Design Spectral Acceleration at 1.0 sec. (SD1) = 0.221g
Seismic Design Category (SDC) = B

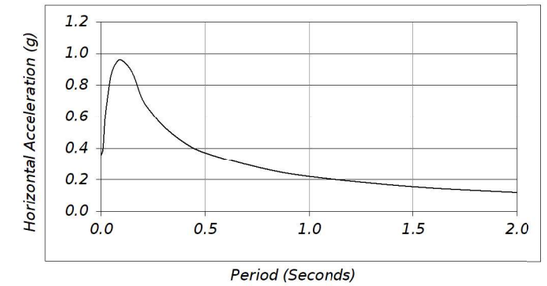

LOADING HL-93

Allow 50#/sq. ft. for future wearing surface.

DESIGN SPECIFICATIONS

2020 AASHTO LRFD Bridge Design Specifications, 9th Edition
2023 AASHTO Guide Specifications for LRFD Seismic Bridge Design, 3rd Edition

DESIGN STRESSES

FIELD UNITS

f 'c = 4,000 psi (Superstructure)
f 'c = 3,500 psi (Substructure)
fy = 60,000 psi (Reinforcement)
fy = 50,000 psi (M270 Grade 50)

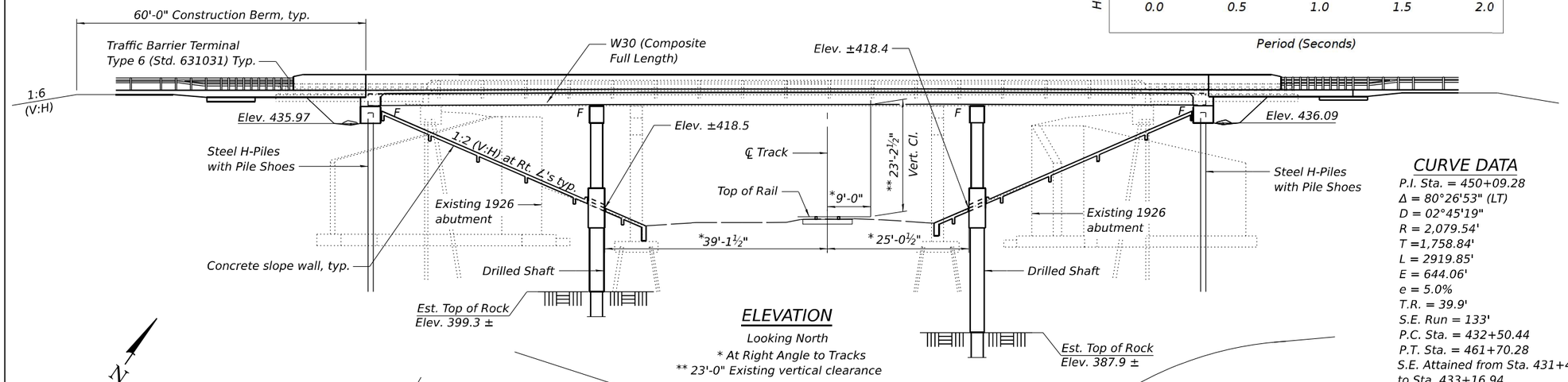

ELEVATION

Looking North
* At Right Angle to Tracks
** 23'-0" Existing vertical clearance

CURVE DATA

P.I. Sta. = 450+09.28
Δ = 80°26'53" (LT)
D = 02°45'19"
R = 2,079.54'
T =1,758.84'
L = 2919.85'
E = 644.06'
e = 5.0%
T.R. = 39.9'
S.E. Run = 133'
P.C. Sta. = 432+50.44
P.T. Sta. = 461+70.28
S.E. Attained from Sta. 431+44.04
to Sta. 433+16.94

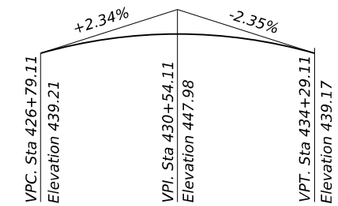

LVC = 750'

PROFILE GRADE

(Along ℄ F.A.P. Rte. 322)

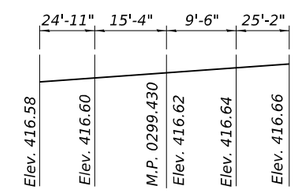

PROFILE GRADE

(Looking West)
Top of Rail C.N.I.C. Railroad

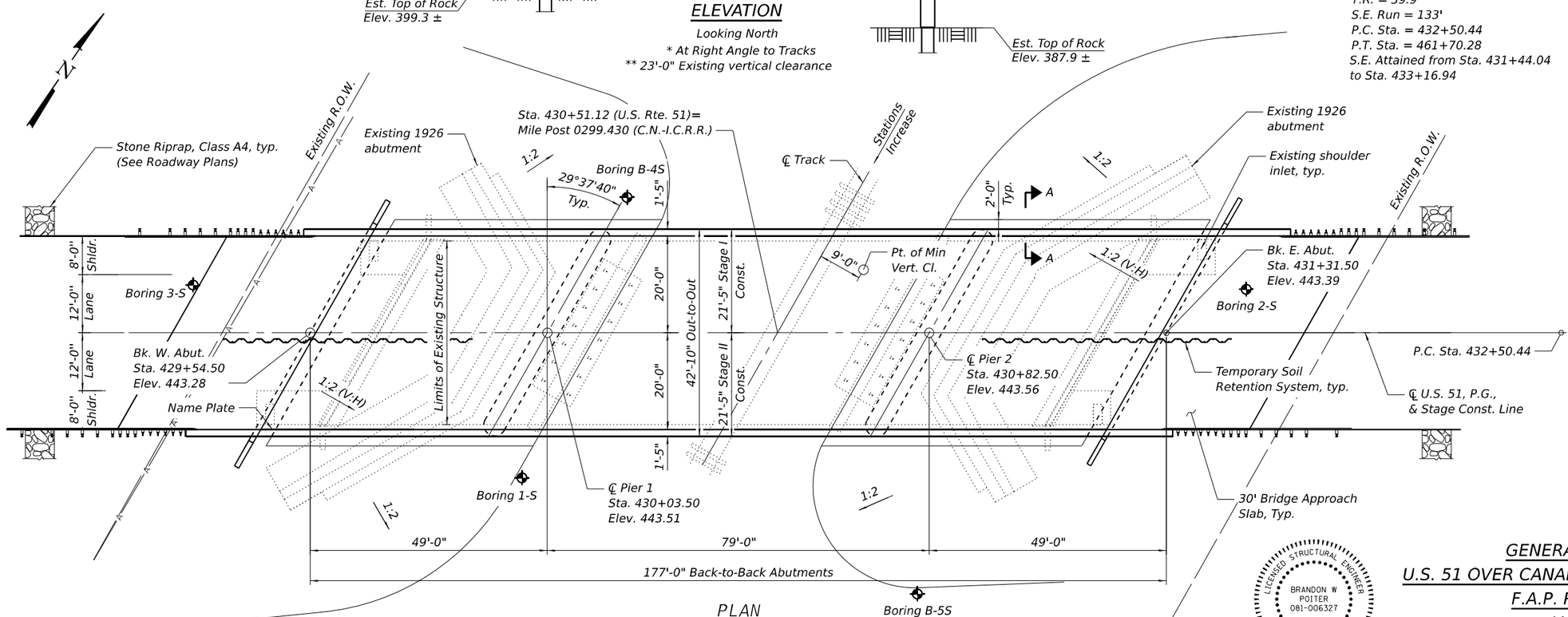

PLAN

Note:
All structural steel shall be galvanized

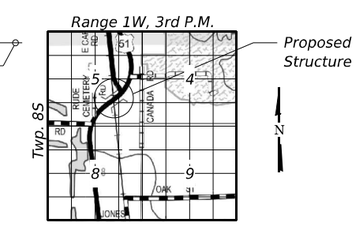

LOCATION SKETCH

APPROVED
For Structural Adequacy Only
Engineer of Bridges & Structures

LICENSED STRUCTURAL ENGINEER
BRANDON W POITER
081-006327
STATE OF ILLINOIS
Date: 08/27/2025
Expires: 11/30/2026

GENERAL PLAN & ELEVATION
U.S. 51 OVER CANADIAN NATIONAL-ILL. CENTRAL R.R.
F.A.P. RTE 322 - SEC. 3VB-3
JACKSON COUNTY
STA. 430+51.12
STRUCTURE NO. 039-0084

TWM ENGINEERING GEOSPATIAL SERVICES — TWM, INC. WWW.TWM-INC.COM — IL DESIGN FIRM LICENSE NO: 184-001220	USER NAME = bpoiter	DESIGNED - TCS	REVISED -	STATE OF ILLINOIS DEPARTMENT OF TRANSPORTATION	GENERAL PLAN & ELEVATION STRUCTURE NO. 039-0084
		CHECKED - BWP	REVISED -		
	PLOT SCALE = 0:2.000 ':' / in.	DRAWN - TCS	REVISED -		SHEET 1 OF 31 SHEETS
	PLOT DATE = 8/21/2025	CHECKED - BWP	REVISED -		

F.A.P. RTE.	SECTION	COUNTY	TOTAL SHEETS	SHEET NO.
322	3VB-3	JACKSON	124	69
		CONTRACT NO. 78937		
		ILLINOIS	FED. AID PROJECT	

MODEL: Default
FILE NAME: P:\2024\240166B - US 51 over ICRR Bridge Replacement\4 CADD - DWG\4.4 Struc\0390084-78937-001-GPE.dgn
8/21/2025 11:09:35 AM

GENERAL NOTES

1. Fasteners shall be ASTM F 3125 Grade A325 Type 1. Fasteners shall be hot dip galvanized. See Special Provision for "Hot Dip Galvanizing for Structural Steel." Bolts 7/8" diameter, holes 15/16" diameter, unless otherwise noted.
2. Calculated weight of Structural Steel = 167,930 lbs (M270 Grade 50)
   17,110 lbs (M270 Grade 36)
3. All new structural steel shall be galvanized. See Special Provision for "Hot Dip Galvanizing for Structural Steel".
4. No field welding is permitted except as specified in the contract documents.
5. Reinforcement bars designated (E) shall be epoxy coated.
6. Slipforming of the parapets is not allowed.
7. Bearing seat surfaces shall be constructed or adjusted to the designated elevations within a tolerance of 1/8 in. (0.01 ft.). Adjustment shall be made either by grinding the surface or by shimming the bearings.
8. The embankment configuration shown shall be the minimum that must be placed and compacted prior to construction of the abutments.

CANADIAN NATIONAL (CN) RAILROAD GENERAL NOTES

The Contractor shall be responsible for developing and submitting demo/removal and construction/erection plans to the CN Railroad while ensuring the following conditions are met:

The following minimum temporary clearances must be maintained at all times during any construction operations on or adjacent to Railroad Company property:

1. Vertical: 22'-0" (7.00 m) above top of highest rail within 12'-0" (3.81 m) of the centerline of any track.
2. Horizontal: 12'-0" (3.81 m) from centerline of the nearest track, measured at right angles thereto.
3. If lesser clearances than the above are required for any part of the work, Licensee and/or their contractor shall secure written authorization from Railroad Company's Engineering Manager for such lesser clearances in advance of the start of that portion of the work.

The Contractor shall submit the required plans to the CN Railroad for review and approval prior to project start.
The Contractor shall submit the required documents to the following contact:
Diane Lewis - Public Works Manager | Public Works South | Email: Diane.Lewis@cn.ca

INDEX OF SHEETS

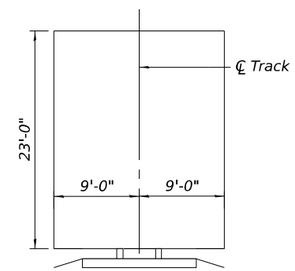

RAILROAD CLEARANCE

TOTAL BILL OF MATERIAL

ITEM	UNIT	SUPER	SUB	TOTAL
Removal of Existing Structures	L. Sum	-	-	1
Structure Excavation	Cu. Yd.	-	456	456
Concrete Structures	Cu. Yd.	-	250.2	250.2
Concrete Superstructure	Cu. Yd.	289.1	-	289.1
Bridge Deck Grooving	Sq. Yd.	991	-	991
Protective Coat	Sq. Yd.	1235	-	1235
Concrete Superstructure (Approach Slab)	Cu. Yd.	116.8	-	116.8
Furnishing And Erecting Structural Steel	L. Sum	1	-	1
Stud Shear Connectors	Each	5256	-	5256
Reinforcement Bars	Pound	-	27,040	27,040
Reinforcement Bars, Epoxy Coated	Pound	114,560	39,750	154,310
Bar Splicers	Each	805	136	941
Mechanical Splicers	Each	-	332	332
Slope Wall 4 Inch	Sq. Yd.	-	618	618
Furnishing Steel Piles HP12x63	Foot	-	395	395
Driving Piles	Foot	-	395	395
Test Pile Steel HP12x63	Each	-	2	2
Pile Shoes	Each	-	12	12
Name Plates	Each	-	-	1
Drilled Shaft In Soil	Cu. Yd.	-	59.5	59.5
Drilled Shaft In Rock	Cu. Yd.	-	45.3	45.3
Anchor Bolts, 3/4"	Each	-	24	24
Anchor Bolts, 1"	Each	-	24	24
Temporary Soil Retention System	Sq. Ft.	-	603	603
Granular Backfill For Structures	Cu. Yd.	-	250	250
Pipe Underdrains For Structures 4"	Foot	-	165	165
Crosshole Sonic Logging Access Ducts	Foot	-	340	340
Crosshole Sonic Logging Testing	Each	-	2	2
Bar Terminators	Each	-	752	752
Asbestos Bearing Pad Removal	Each	-	28	28
Temporary Support System	Each	-	2	2

STA. 430+51.12
BUILT BY
STATE OF ILLINOIS
F.A.P. RT. 322 SEC. 3VB-3
LOADING HL-93
STR. NO. 039-0084

NAME PLATE

See Std. 515001

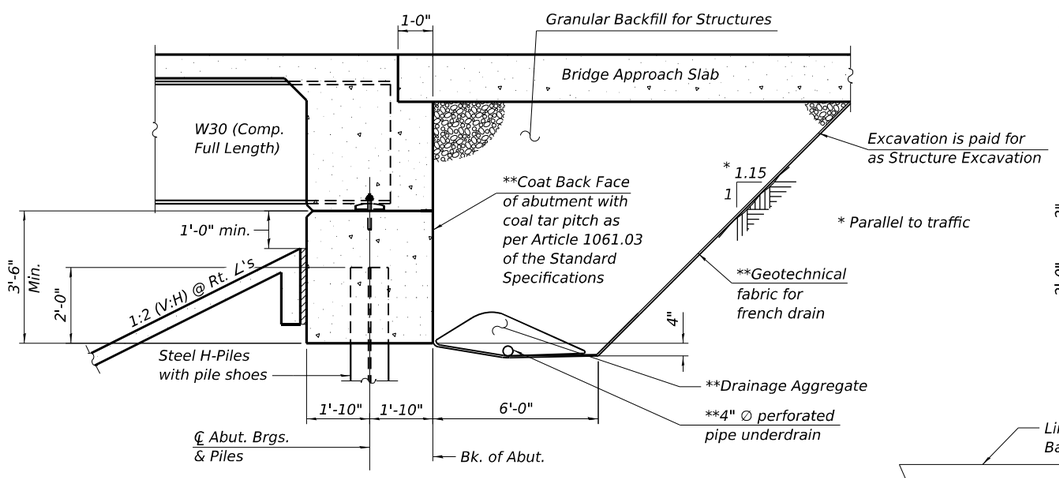

SECTION THRU INTEGRAL ABUTMENT

(Horiz. dim. at Rt. ∠'s)
**Included in the cost of Pipe Underdrains for Structures

Notes:
All drainage system components shall extend to 2'-0" from the end of each wingwall except an outlet pipe shall extend until intersecting with the side slopes. The pipes shall drain into concrete headwalls. (See Article 601.05 of the Standard Specifications and Highway Standard 601101).
Granular Backfill behind the abutments shall be CA7 or CA11 and shall be compacted according to Article 205.06 of the Standard Specifications.

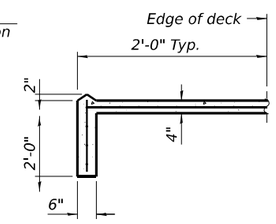

SECTION A-A

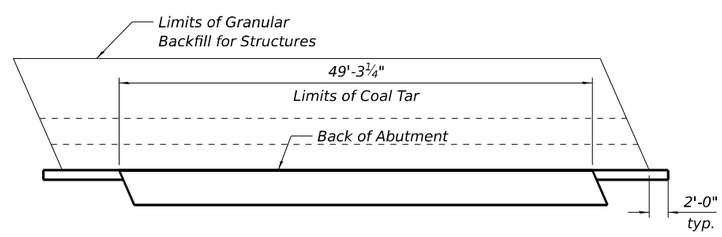

PLAN LIMITS OF GRANULAR BACKFILL FOR STRUCTURES

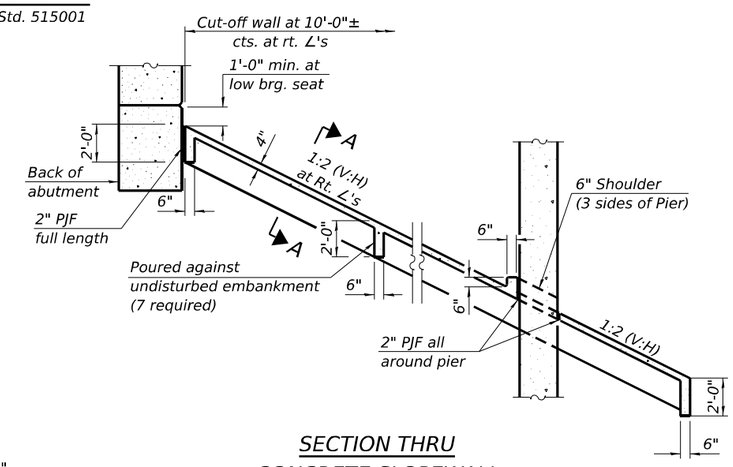

SECTION THRU CONCRETE SLOPEWALL

Note:
Slope wall shall be reinforced with welded wire fabric, 6 in. x 6 in. – W4.0 x W4.0, weighing 58 lbs. per 100 sq. ft.

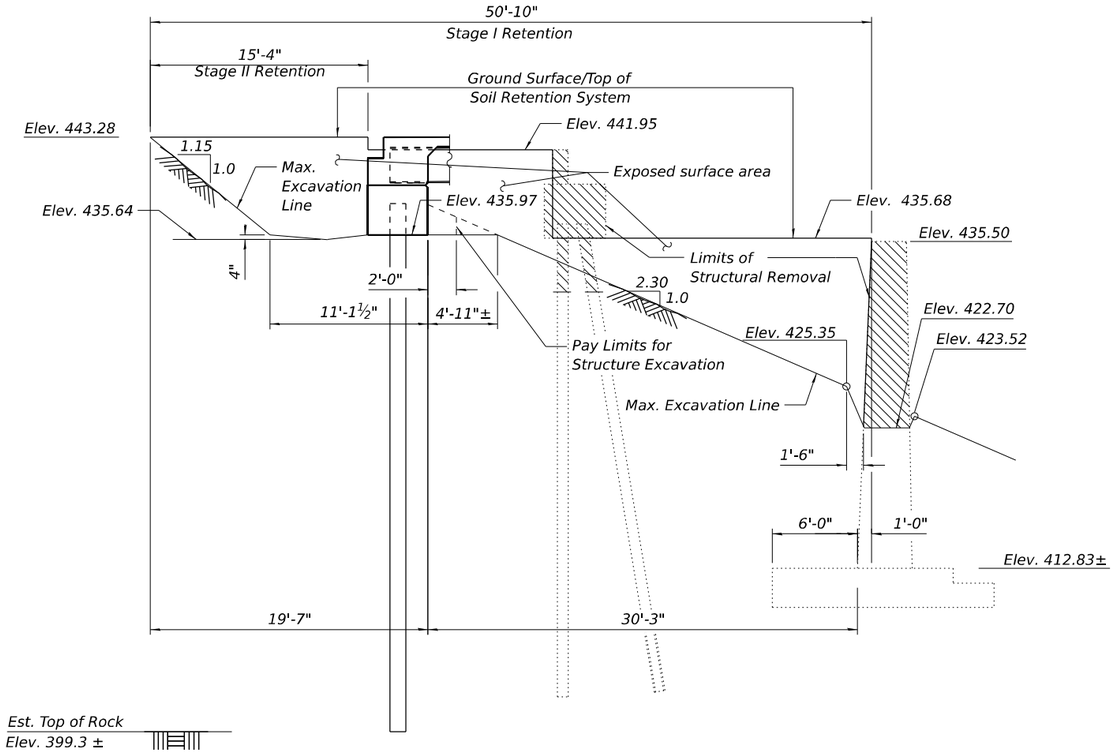

WEST ABUTMENT TEMPORARY SOIL RETENTION SYSTEM

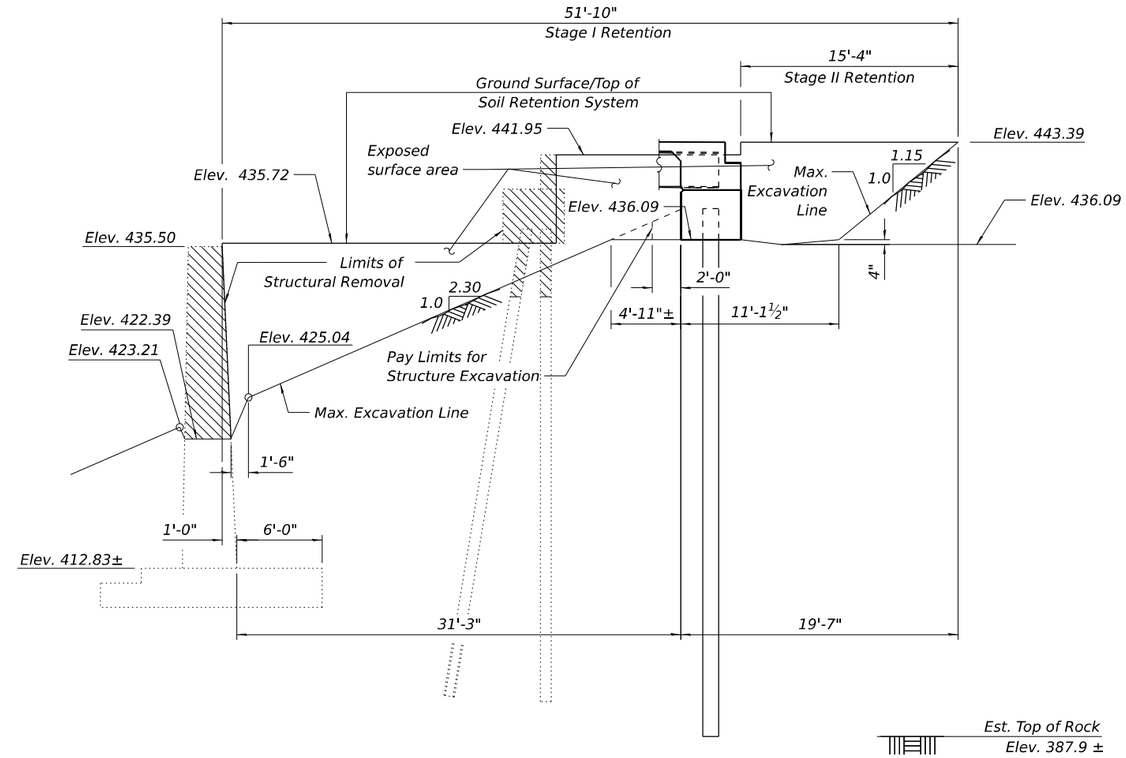

EAST ABUTMENT TEMPORARY SOIL RETENTION SYSTEM

Note:
A cantilevered sheet piling design does not appear feasible and additional members or other retention systems may be necessary. The Contractor shall submit a temporary soil retention system design including plan details and calculations for review and acceptance by the Engineer.

MODEL: Default
FILE NAME: P:\2024\240166B - US 51 over ICRR Bridge Replacement\4 CADD - DWG\4.4 Struct\0390084-78937-003-Temporary Soil Retention System.dgn
8/21/2025 11:09:37 AM

TWM ENGINEERING & GEOSPATIAL SERVICES	TWM, INC. WWW.TWM-INC.COM IL DESIGN FIRM LICENSE NO: 184-001220	USER NAME = bpolter	DESIGNED - TCS	REVISED -	STATE OF ILLINOIS DEPARTMENT OF TRANSPORTATION
			CHECKED - BWP	REVISED -	
		PLOT SCALE = 0:2,000 ':" / in.	DRAWN - TCS	REVISED -	
		PLOT DATE = 8/21/2025	CHECKED - BWP	REVISED -	

TEMPORARY SOIL RETENTION SYSTEM
STRUCTURE NO. 039-0084
SHEET 3 OF 31 SHEETS

F.A.P. RTE.	SECTION	COUNTY	TOTAL SHEETS	SHEET NO.
322	3VB-3	JACKSON	124	71
		CONTRACT NO. 78937		
	ILLINOIS	FED. AID PROJECT		

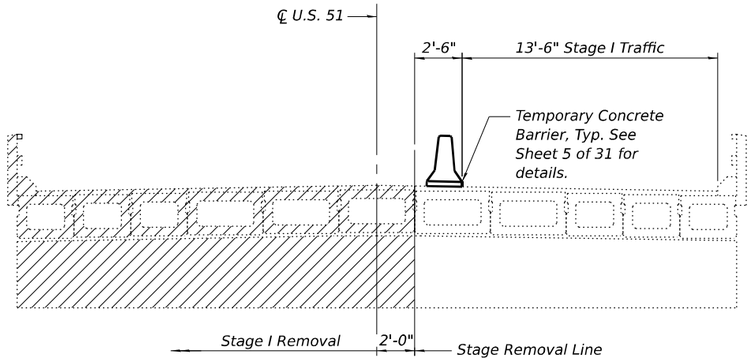

STAGE I REMOVAL

(Looking East)

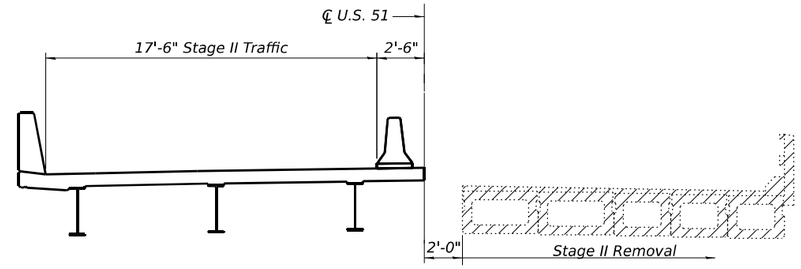

STAGE II REMOVAL

(Looking East)

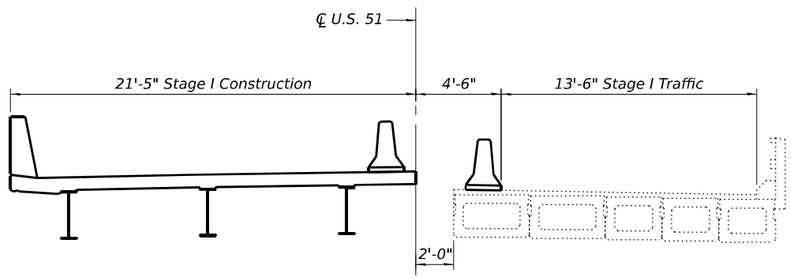

STAGE I CONSTRUCTION

(Looking East)

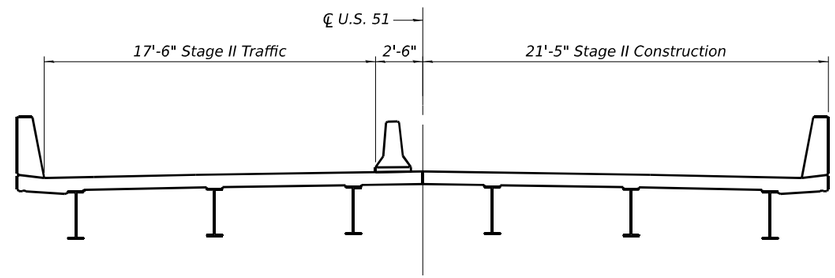

STAGE II CONSTRUCTION

(Looking East)

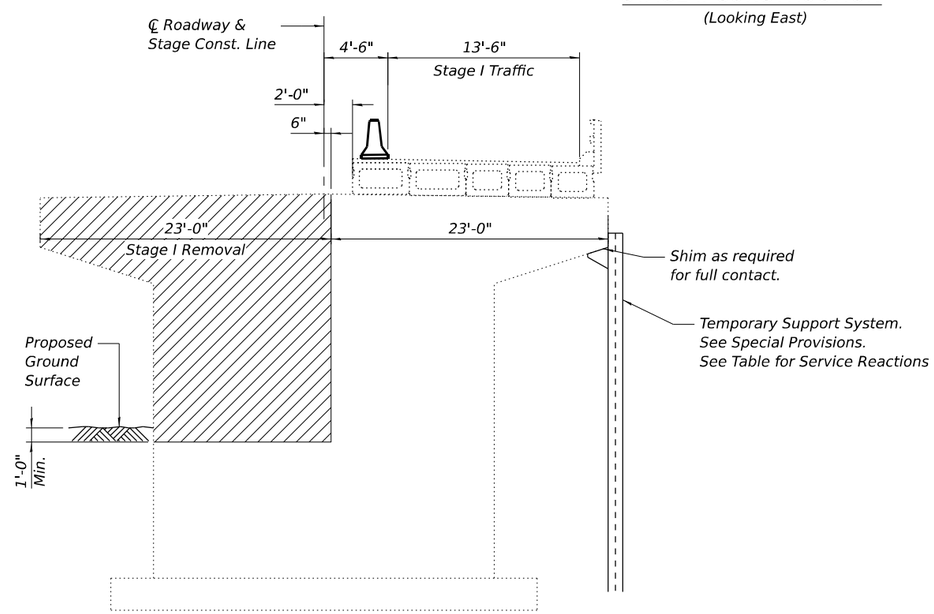

Temporary Support Service Reaction	
Dead Load	Live Load
50 kips	32 kips

TEMPORARY SUPPORT SYSTEM AT PIERS

(Looking East)

Note:

Hatched area indicates Removal of Existing Structures.

For quantities of Temporary Concrete Barrier, see Roadway Plans.

The Temporary Support System shown is a general representation of a possible support system. The contractor shall employ an Illinois Licensed Structural Engineer to design the final system and submit for review and approval by the Engineer.

No Stage I removal shall be allowed until the temporary support systems are in place.

The stage removal line at the piers differs from that of the abutments and superstructure.

MODEL: Default
FILE NAME: P:\2024\240166\B - US 51 over ICRR Bridge Replacement\4 CADD - DWG\4.4 Struct\0390084-78937-004-Stage Construction Details.dgn

8/21/2025 11:09:37 AM

TWM ENGINEERING GEOSPATIAL SERVICES

TWM, INC.
WWW.TWM-INC.COM
IL DESIGN FIRM LICENSE NO: 184-001220

USER NAME = bpoiter	DESIGNED - TCS	REVISED -	
	CHECKED - BWP	REVISED -	
PLOT SCALE = 0:2.000 ':" / in.	DRAWN - TCS	REVISED -	
PLOT DATE = 8/21/2025	CHECKED - BWP	REVISED -	

STATE OF ILLINOIS
DEPARTMENT OF TRANSPORTATION

STAGE CONSTRUCTION DETAILS
STRUCTURE NO. 039-0084

SHEET 4 OF 31 SHEETS

F.A.P. RTE.	SECTION	COUNTY	TOTAL SHEETS	SHEET NO.
322	3VB-3	JACKSON	124	72
		CONTRACT NO. 78937		
	ILLINOIS	FED. AID PROJECT		

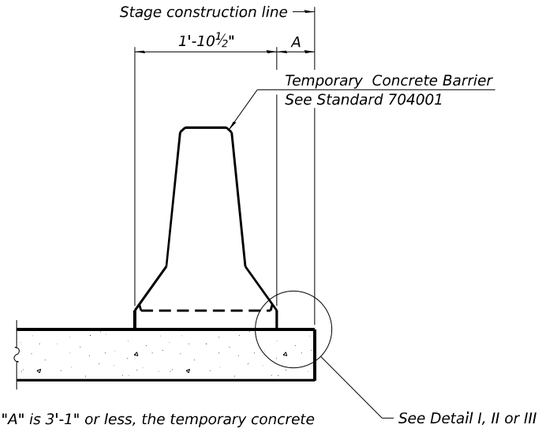

When "A" is 3'-1" or less, the temporary concrete barrier shall be restrained to the new slab according to Detail I, II or III. No restraint is required when "A" is greater than 3'-1".

NEW SLAB OR NEW DECK BEAM

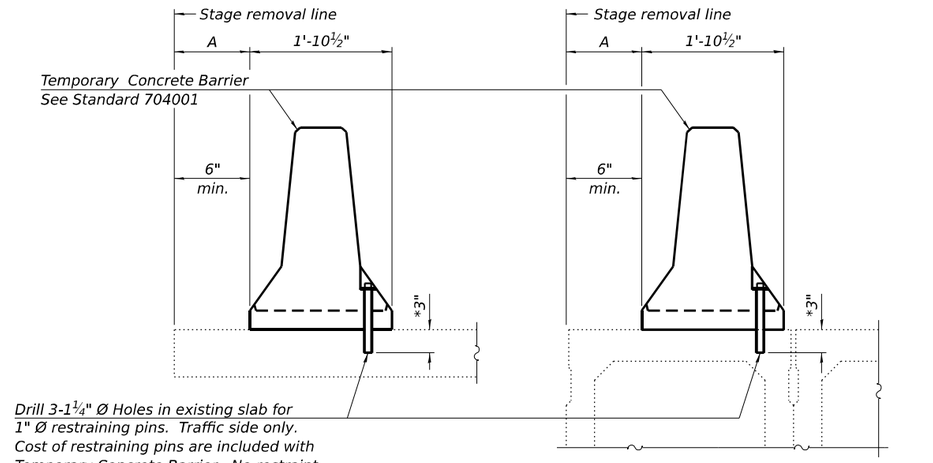

EXISTING SLAB

* When hot-mix asphalt wearing surface is present, embedment shall be 3" plus the wearing surface depth.

EXISTING DECK BEAM

SECTIONS THRU SLAB OR DECK BEAM

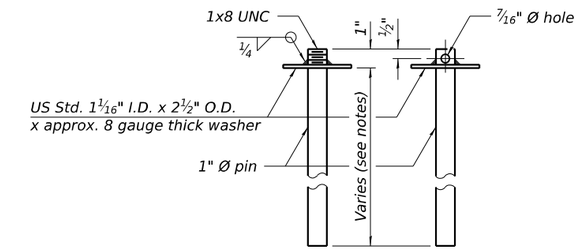

RESTRAINING PIN

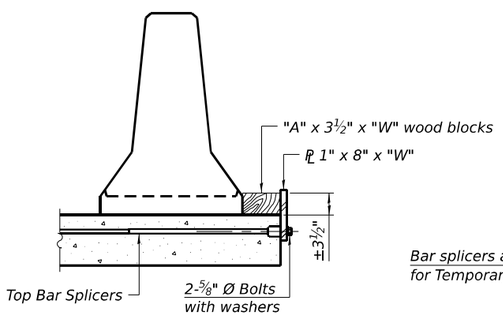

DETAIL I

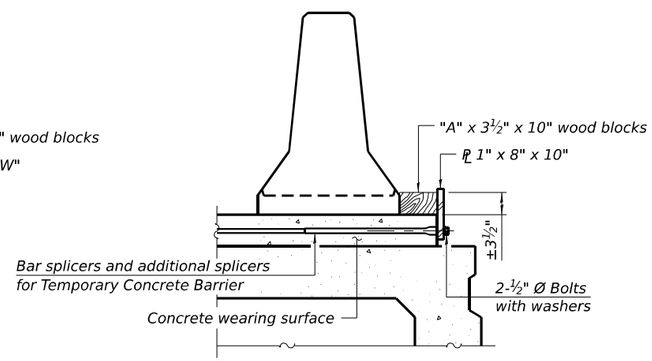

DETAIL II

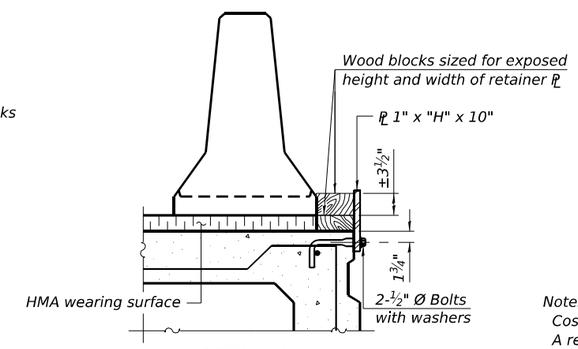

DETAIL III

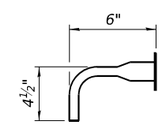

BAR SPLICER FOR #4 BAR - DETAIL III

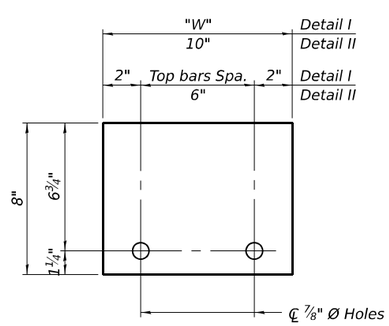

STEEL RETAINER ℄ 1" x 8" x "W"

(Detail I and II)

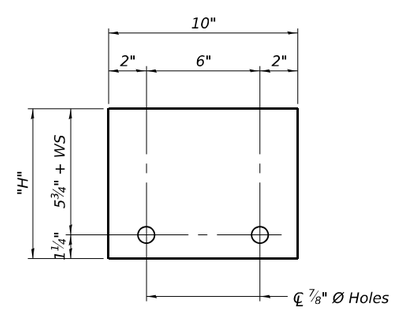

STEEL RETAINER ℄ 1" x "H" x 10"

(Detail III)

Notes:

Cost of retainer assembly is included with Temporary Concrete Barrier.

A retainer assembly shall be located at the approximate ℄ of each temporary concrete barrier.

The retainer plate shall not be removed until the concrete on the adjacent stage is ready to be poured. For Detail III applications the retainer plate shall not be removed until just prior to placing the adjacent beam.

When the 'A' dimension is less than 1½", the wood block shall be omitted and the barrier shall be placed in direct contact with the steel retainer plate. For deck beam applications the minimum required 'A' distance is 6" to accommodate the shear key clamping device.

Detail I - Installation for a new bridge deck or bridge slab.

Detail II - Installation for a new deck beam with an initial concrete wearing surface. Additional bar splicers shall be provided at 6'-0" centers and paired with the bar splicers of the concrete wearing surface reinforcement to accommodate the installation of the retainer assemblies. The cost of the additional bar splicers is included with the concrete wearing surface.

Detail III - Installation for a new deck beam with no initial wearing surface or with an initial hot-mix asphalt (HMA) wearing surface present. The deck beam directly beneath the temporary concrete barrier shall be fabricated with bar splicer inserts in the side of the beam, as detailed, to accommodate the installation of the retainer assemblies. A pair of bar splicers, 6" apart, shall be placed at 6'-0" centers along the length of the beam. The cost of the bar splicers is included with the deck beam.

RAILING CRITERIA

NCHRP 350 Test Level	3
Railing Weight (plf)	440

R-27

5-15-2023

MODEL: Default
FILE NAME: P:\2024\2401866B - US 51 over ICRR Bridge Replacement\4 CADD - DWG\4.4 Struc\0390084-78937-005-Temporary Concrete Barrier.dgn

TWM ENGINEERING GEOSPATIAL SERVICES
TWM, INC.
WWW.TWM-INC.COM
IL DESIGN FIRM LICENSE NO: 184-001220

USER NAME =	bpolter	DESIGNED -	TCS	REVISED -	
		CHECKED -	BWP	REVISED -	
PLOT SCALE =	0:2.000 ':" / in.	DRAWN -	TCS	REVISED -	
PLOT DATE =	8/21/2025	CHECKED -	BWP	REVISED -	

STATE OF ILLINOIS
DEPARTMENT OF TRANSPORTATION

TEMPORARY CONCRETE BARRIER
STRUCTURE NO. 039-0084

SHEET 5 OF 31 SHEETS

F.A.P. RTE.	SECTION	COUNTY	TOTAL SHEETS	SHEET NO.
322	3VB-3	JACKSON	124	73

CONTRACT NO. 78937

ILLINOIS FED. AID PROJECT

8/21/2025 11:09:38 AM

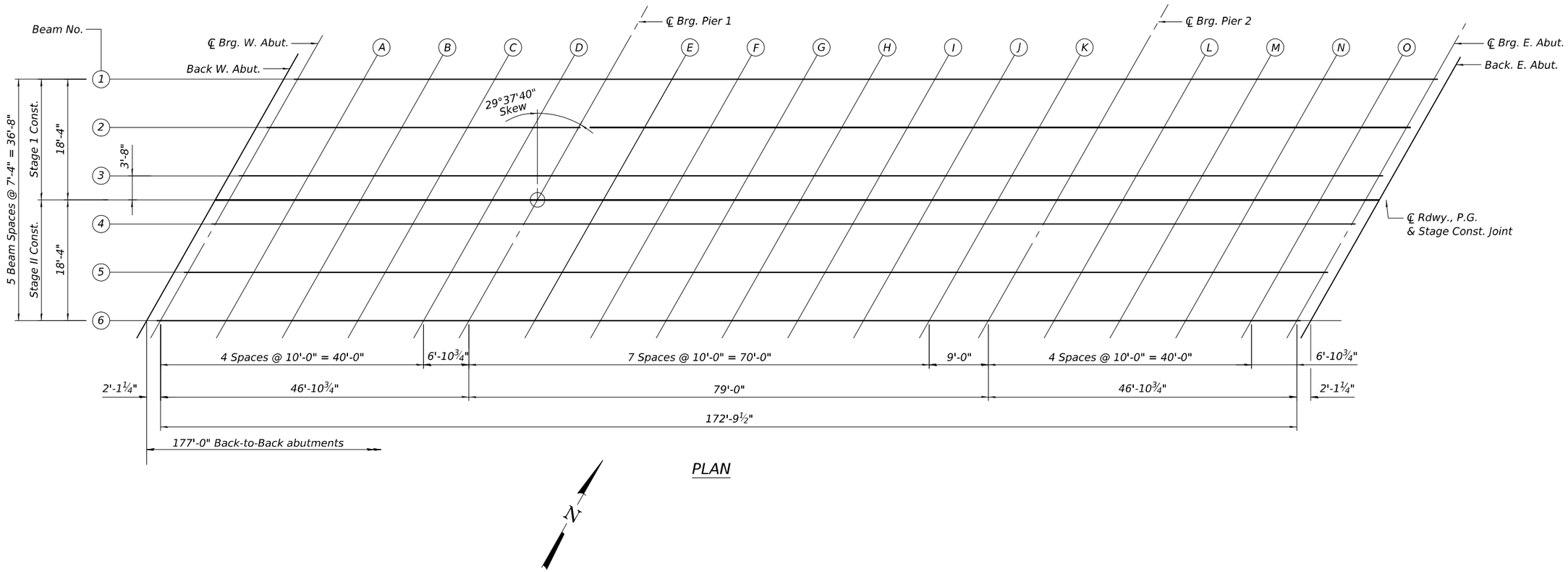

PLAN

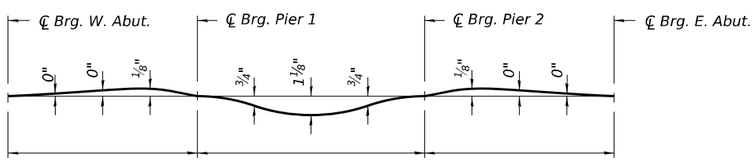

DEAD LOAD DEFLECTION DIAGRAM

(Includes weight of concrete only.)

Note:
The above deflections are not to be used in the field if the engineer is working from the grade elevations adjusted for dead load deflections as shown on sheets 7 & 8 of 31.

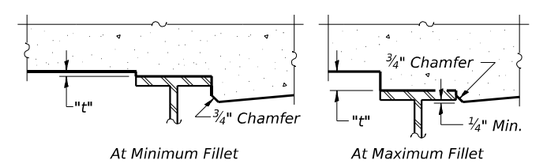

At Minimum Fillet At Maximum Fillet

To determine "t": After all structural steel has been erected, elevations of the top flanges of the beams shall be taken at intervals shown below. These elevations subtracted from the "Theoretical Grade Elevations Adjusted for Dead Load Deflection" shown on Sheets 7 & 8 of 31, minus slab thickness, equals the fillet heights "t" above top flange of beams.

FILLET HEIGHTS

MODEL: Default
FILE NAME: P:\2024\240166\B - US 51 over ICRR Bridge Replacement\4 CADD - DWG\4.4 Struct\0390084-78937-006-Top of Slab Elevations.dgn

8/21/2025 11:09:38 AM

TWM ENGINEERING GEOSPATIAL SERVICES
TWM, INC.
WWW.TWM-INC.COM
IL DESIGN FIRM LICENSE NO: 184-001220

USER NAME = bpoiter	DESIGNED - TCS	REVISED -	
	CHECKED - BWP	REVISED -	
PLOT SCALE = 0:2.000 ':' / in.	DRAWN - TCS	REVISED -	
PLOT DATE = 8/21/2025	CHECKED - BWP	REVISED -	

STATE OF ILLINOIS
DEPARTMENT OF TRANSPORTATION

TOP OF SLAB ELEVATIONS
STRUCTURE NO. 039-0084

SHEET 6 OF 31 SHEETS

F.A.P. RTE.	SECTION	COUNTY	TOTAL SHEETS	SHEET NO.
322	3VB-3	JACKSON	124	74
		CONTRACT NO. 78937		
	ILLINOIS	FED. AID PROJECT		

GIRDER 1

Location	Station	Offset	Theoretical Grade Elevations	Theoretical Grade Elevations Adjusted for Dead Load Deflection
Bk. W. Abut.	429+64.93	-18.33	443.03	443.03
℄ Brg. W. Abut.	429+67.04	-18.33	443.04	443.04
A	429+77.04	-18.33	443.09	443.10
B	429+87.04	-18.33	443.14	443.14
C	429+97.04	-18.33	443.18	443.17
D	430+07.04	-18.33	443.21	443.20
℄ Brg. Pier 1	430+13.93	-18.33	443.23	443.23
E	430+23.93	-18.33	443.25	443.28
F	430+33.93	-18.33	443.26	443.33
G	430+43.93	-18.33	443.27	443.36
H	430+53.93	-18.33	443.28	443.37
I	430+63.93	-18.33	443.27	443.36
J	430+73.93	-18.33	443.26	443.32
K	430+83.93	-18.33	443.25	443.27
℄ Brg. Pier 2	430+92.93	-18.33	443.23	443.23
L	431+02.93	-18.33	443.20	443.19
M	431+12.93	-18.33	443.17	443.16
N	431+22.93	-18.33	443.12	443.13
O	431+32.93	-18.33	443.08	443.08
℄ Brg. E. Abut.	431+39.82	-18.33	443.04	443.04
Bk. E. Abut.	431+41.93	-18.33	443.03	443.03

GIRDER 2

Location	Station	Offset	Theoretical Grade Elevations	Theoretical Grade Elevations Adjusted for Dead Load Deflection
Bk. W. Abut.	429+60.76	-11.00	443.15	443.15
℄ Brg. W. Abut.	429+62.87	-11.00	443.16	443.16
A	429+72.87	-11.00	443.22	443.22
B	429+82.87	-11.00	443.26	443.27
C	429+92.87	-11.00	443.30	443.30
D	430+02.87	-11.00	443.34	443.33
℄ Brg. Pier 1	430+09.76	-11.00	443.36	443.36
E	430+19.76	-11.00	443.38	443.41
F	430+29.76	-11.00	443.40	443.46
G	430+39.76	-11.00	443.41	443.50
H	430+49.76	-11.00	443.42	443.51
I	430+59.76	-11.00	443.42	443.50
J	430+69.76	-11.00	443.41	443.47
K	430+79.76	-11.00	443.40	443.42
℄ Brg. Pier 2	430+88.76	-11.00	443.38	443.38
L	430+98.76	-11.00	443.35	443.35
M	431+08.76	-11.00	443.32	443.32
N	431+18.76	-11.00	443.28	443.29
O	431+28.76	-11.00	443.24	443.24
℄ Brg. E. Abut.	431+35.65	-11.00	443.21	443.21
Bk. E. Abut.	431+37.76	-11.00	443.20	443.20

GIRDER 3

Location	Station	Offset	Theoretical Grade Elevations	Theoretical Grade Elevations Adjusted for Dead Load Deflection
Bk. W. Abut.	429+56.59	-3.67	443.24	443.24
℄ Brg. W. Abut.	429+58.69	-3.67	443.25	443.25
A	429+68.69	-3.67	443.30	443.31
B	429+78.69	-3.67	443.35	443.36
C	429+88.69	-3.67	443.40	443.39
D	429+98.69	-3.67	443.43	443.43
℄ Brg. Pier 1	430+05.59	-3.67	443.46	443.46
E	430+15.59	-3.67	443.48	443.51
F	430+25.59	-3.67	443.50	443.56
G	430+35.59	-3.67	443.52	443.61
H	430+45.59	-3.67	443.53	443.62
I	430+55.59	-3.67	443.53	443.61
J	430+65.59	-3.67	443.52	443.58
K	430+75.59	-3.67	443.51	443.54
℄ Brg. Pier 2	430+84.59	-3.67	443.50	443.50
L	430+94.59	-3.67	443.47	443.47
M	431+04.59	-3.67	443.45	443.44
N	431+14.59	-3.67	443.41	443.41
O	431+24.59	-3.67	443.37	443.37
℄ Brg. E. Abut.	431+31.48	-3.67	443.34	443.34
Bk. E. Abut.	431+33.59	-3.67	443.33	443.33

℄ ROADWAY, PROFILE GRADE & STAGE CONST. JT.

Location	Station	Offset	Theoretical Grade Elevations	Theoretical Grade Elevations Adjusted for Dead Load Deflection
Bk. W. Abut.	429+54.50	0.00	443.28	443.28
℄ Brg. W. Abut.	429+56.61	0.00	443.29	443.29
A	429+66.61	0.00	443.35	443.35
B	429+76.61	0.00	443.40	443.40
C	429+86.61	0.00	443.44	443.44
D	429+96.61	0.00	443.48	443.48
℄ Brg. Pier 1	430+03.50	0.00	443.51	443.51
E	430+13.50	0.00	443.53	443.56
F	430+23.50	0.00	443.56	443.62
G	430+33.50	0.00	443.57	443.66
H	430+43.50	0.00	443.58	443.68
I	430+53.50	0.00	443.58	443.67
J	430+63.50	0.00	443.58	443.64
K	430+73.50	0.00	443.57	443.59
℄ Brg. Pier 2	430+82.50	0.00	443.56	443.56
L	430+92.50	0.00	443.54	443.53
M	431+02.50	0.00	443.51	443.51
N	431+12.50	0.00	443.47	443.48
O	431+22.50	0.00	443.43	443.44
℄ Brg. E. Abut.	431+29.39	0.00	443.40	443.40
Bk. E. Abut.	431+31.50	0.00	443.39	443.39

GIRDER 4

Location	Station	Offset	Theoretical Grade Elevations	Theoretical Grade Elevations Adjusted for Dead Load Deflection
Bk. W. Abut.	429+52.41	3.67	443.21	443.21
℄ Brg. W. Abut.	429+54.52	3.67	443.22	443.22
A	429+64.52	3.67	443.28	443.29
B	429+74.52	3.67	443.33	443.34
C	429+84.52	3.67	443.38	443.38
D	429+94.52	3.67	443.42	443.41
℄ Brg. Pier 1	430+01.41	3.67	443.44	443.44
E	430+11.41	3.67	443.47	443.50
F	430+21.41	3.67	443.50	443.56
G	430+31.41	3.67	443.51	443.60
H	430+41.41	3.67	443.52	443.62
I	430+51.41	3.67	443.53	443.61
J	430+61.41	3.67	443.53	443.58
K	430+71.41	3.67	443.52	443.54
℄ Brg. Pier 2	430+80.41	3.67	443.51	443.51
L	430+90.41	3.67	443.49	443.48
M	431+00.41	3.67	443.46	443.46
N	431+10.41	3.67	443.43	443.43
O	431+20.41	3.67	443.39	443.39
℄ Brg. E. Abut.	431+27.31	3.67	443.36	443.36
Bk. E. Abut.	431+29.41	3.67	443.35	443.35

GIRDER 5

Location	Station	Offset	Theoretical Grade Elevations	Theoretical Grade Elevations Adjusted for Dead Load Deflection
Bk. W. Abut.	429+48.24	11.00	443.07	443.07
℄ Brg. W. Abut.	429+50.35	11.00	443.09	443.09
A	429+60.35	11.00	443.15	443.15
B	429+70.35	11.00	443.20	443.21
C	429+80.35	11.00	443.25	443.25
D	429+90.35	11.00	443.29	443.29
℄ Brg. Pier 1	429+97.24	11.00	443.32	443.32
E	430+07.24	11.00	443.35	443.38
F	430+17.24	11.00	443.38	443.44
G	430+27.24	11.00	443.40	443.48
H	430+37.24	11.00	443.41	443.51
I	430+47.24	11.00	443.42	443.50
J	430+57.24	11.00	443.42	443.48
K	430+67.24	11.00	443.41	443.44
℄ Brg. Pier 2	430+76.24	11.00	443.40	443.40
L	430+86.24	11.00	443.38	443.38
M	430+96.24	11.00	443.36	443.36
N	431+06.24	11.00	443.33	443.33
O	431+16.24	11.00	443.29	443.30
℄ Brg. E. Abut.	431+23.13	11.00	443.27	443.27
Bk. E. Abut.	431+25.24	11.00	443.26	443.26

GIRDER 6

Location	Station	Offset	Theoretical Grade Elevations	Theoretical Grade Elevations Adjusted for Dead Load Deflection
Bk. W. Abut.	429+44.07	18.33	442.90	442.90
℄ Brg. W. Abut.	429+46.18	18.33	442.92	442.92
A	429+56.18	18.33	442.98	442.99
B	429+66.18	18.33	443.04	443.04
C	429+76.18	18.33	443.09	443.09
D	429+86.18	18.33	443.14	443.13
℄ Brg. Pier 1	429+93.07	18.33	443.16	443.16
E	430+03.07	18.33	443.20	443.23
F	430+13.07	18.33	443.23	443.29
G	430+23.07	18.33	443.25	443.33
H	430+33.07	18.33	443.26	443.36
I	430+43.07	18.33	443.27	443.36
J	430+53.07	18.33	443.28	443.33
K	430+63.07	18.33	443.27	443.30
℄ Brg. Pier 2	430+72.07	18.33	443.27	443.27
L	430+82.07	18.33	443.25	443.24
M	430+92.07	18.33	443.23	443.23
N	431+02.07	18.33	443.20	443.21
O	431+12.07	18.33	443.17	443.17
℄ Brg. E. Abut.	431+18.96	18.33	443.14	443.14
Bk. E. Abut.	431+21.07	18.33	443.13	443.13

NORTH SHOULDER LINE

Location	Station	Offset	Theoretical Grade Elevations
W. End West Appr.	429+37.02	-20.00	442.82
A1	429+47.02	-20.00	442.89
A2	429+57.02	-20.00	442.95
E. End West Appr.	429+67.02	-20.00	443.01

NORTH EDGE OF ROADWAY

Location	Station	Offset	Theoretical Grade Elevations
W. End West Appr.	429+32.48	-12.00	442.95
A1	429+42.48	-12.00	443.02
A2	429+52.48	-12.00	443.09
E. End West Appr.	429+62.48	-12.00	443.15

℄ ROADWAY, PROFILE GRADE & STAGE CONST. JT.

Location	Station	Offset	Theoretical Grade Elevations
W. End West Appr.	429+25.65	0.00	443.07
A1	429+35.65	0.00	443.15
A2	429+45.65	0.00	443.22
E. End West Appr.	429+55.65	0.00	443.28

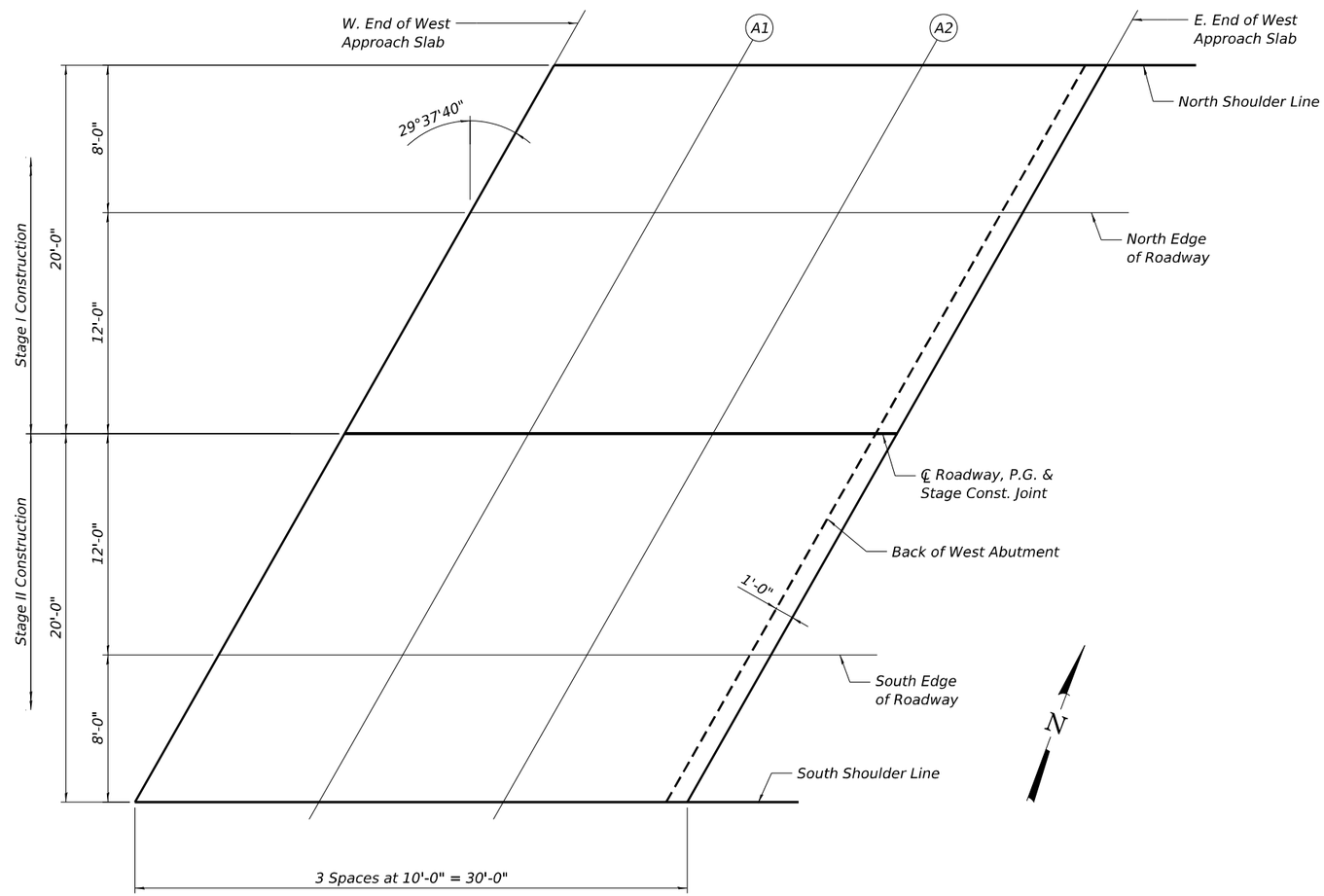

PLAN

SOUTH EDGE OF ROADWAY

Location	Station	Offset	Theoretical Grade Elevations
W. End West Appr.	429+18.83	12.00	442.84
A1	429+28.83	12.00	442.92
A2	429+38.83	12.00	442.99
E. End West Appr.	429+48.83	12.00	443.06

SOUTH SHOULDER LINE

Location	Station	Offset	Theoretical Grade Elevations
W. End West Appr.	429+14.28	20.00	442.64
A1	429+24.28	20.00	442.72
A2	429+34.28	20.00	442.80
E. End West Appr.	429+44.28	20.00	442.87

NORTH SHOULDER LINE

Location	Station	Offset	Theoretical Grade Elevations
W. End East Appr.	431+41.72	-20.00	443.00
A3	431+51.72	-20.00	442.94
A4	431+61.72	-20.00	442.88
E. End East Appr.	431+71.72	-20.00	442.80

NORTH EDGE OF ROADWAY

Location	Station	Offset	Theoretical Grade Elevations
W. End East Appr.	431+37.17	-12.00	443.18
A3	431+47.17	-12.00	443.13
A4	431+57.17	-12.00	443.07
E. End East Appr.	431+67.17	-12.00	443.00

℄ ROADWAY, PROFILE GRADE & STAGE CONST. JT.

Location	Station	Offset	Theoretical Grade Elevations
W. End East Appr.	431+30.35	0.00	443.40
A3	431+40.35	0.00	443.35
A4	431+50.35	0.00	443.29
E. End East Appr.	431+60.35	0.00	443.22

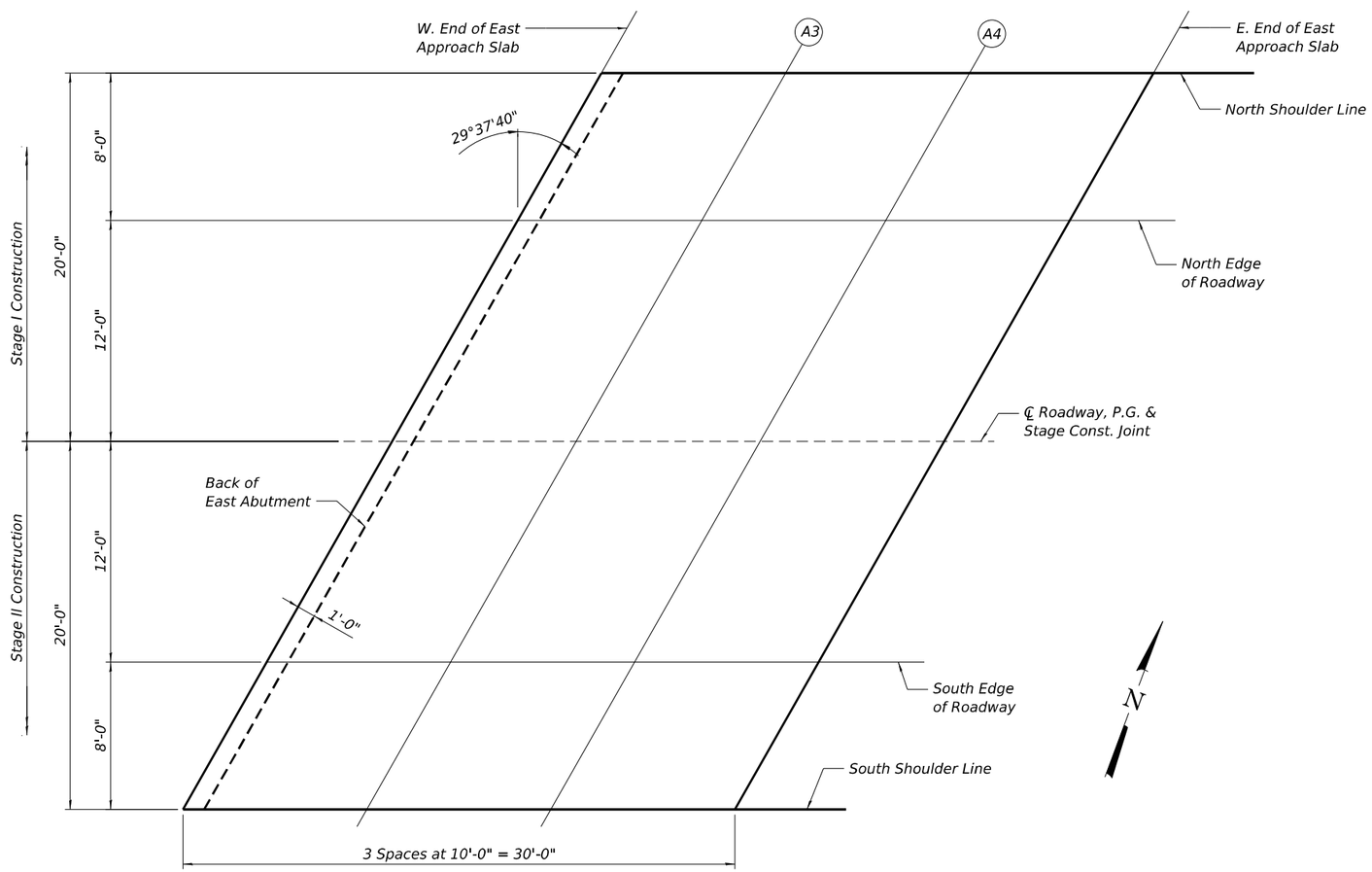

PLAN

SOUTH EDGE OF ROADWAY

Location	Station	Offset	Theoretical Grade Elevations
W. End East Appr.	431+23.52	12.00	443.25
A3	431+33.52	12.00	443.20
A4	431+43.52	12.00	443.15
E. End East Appr.	431+53.52	12.00	443.13

SOUTH SHOULDER LINE

Location	Station	Offset	Theoretical Grade Elevations
W. End East Appr.	431+18.98	20.00	443.11
A3	431+28.98	20.00	443.06
A4	431+38.98	20.00	443.01
E. End East Appr.	431+48.98	20.00	443.00

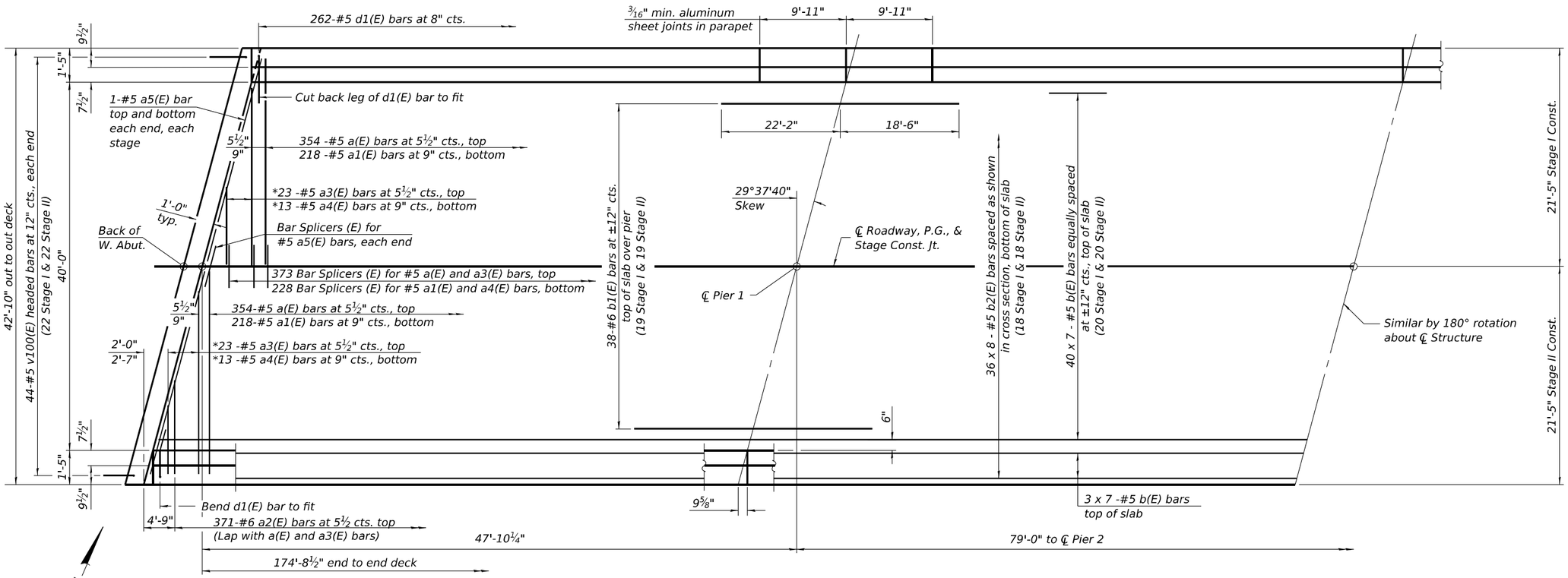

PARTIAL PLAN

MINIMUM BAR LAP

#5 bar = 3'-6"

* See Field Cutting Diagram on sheet 12 of 31.

Notes:
See sheet 12 of 31 for superstructure details and Bill of Material.
Bars indicated thus 20 x 3-#5 etc. indicates 20 lines of bars with 3 lengths per line.

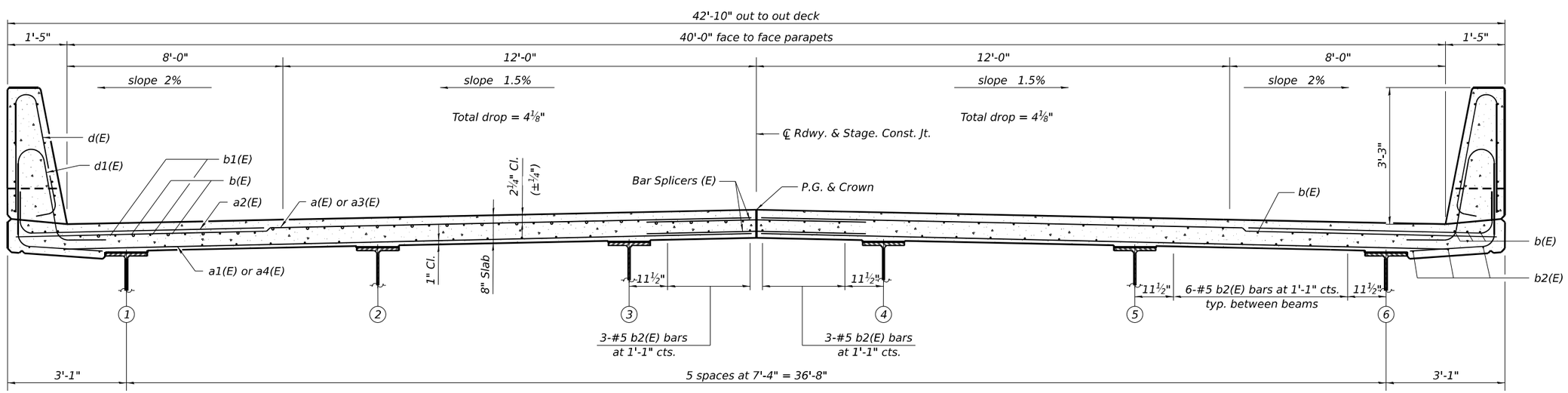

CROSS SECTION
(Looking East)

MODEL: Default
FILE NAME: P:\2024\240166\B - US 51 over ICRR Bridge Replacement\4 CADD - DWG\4.4 Struc\0390084-78937-011-Superstructure.dgn
8/21/2025 11:09:42 AM

TWM ENGINEERING GEOSPATIAL SERVICES
TWM, INC.
WWW.TWM-INC.COM
IL DESIGN FIRM LICENSE NO: 184-001220

USER NAME = bpolter	DESIGNED - TCS	REVISED -	
	CHECKED - BWP	REVISED -	
PLOT SCALE = 0:2.000 ':' / in.	DRAWN - TCS	REVISED -	
PLOT DATE = 8/21/2025	CHECKED - BWP	REVISED -	

STATE OF ILLINOIS
DEPARTMENT OF TRANSPORTATION

SUPERSTRUCTURE
STRUCTURE NO. 039-0084

SHEET 11 OF 31 SHEETS

F.A.P. RTE.	SECTION	COUNTY	TOTAL SHEETS	SHEET NO.
322	3VB-3	JACKSON	124	79
		CONTRACT NO. 78937		
		ILLINOIS	FED. AID PROJECT	

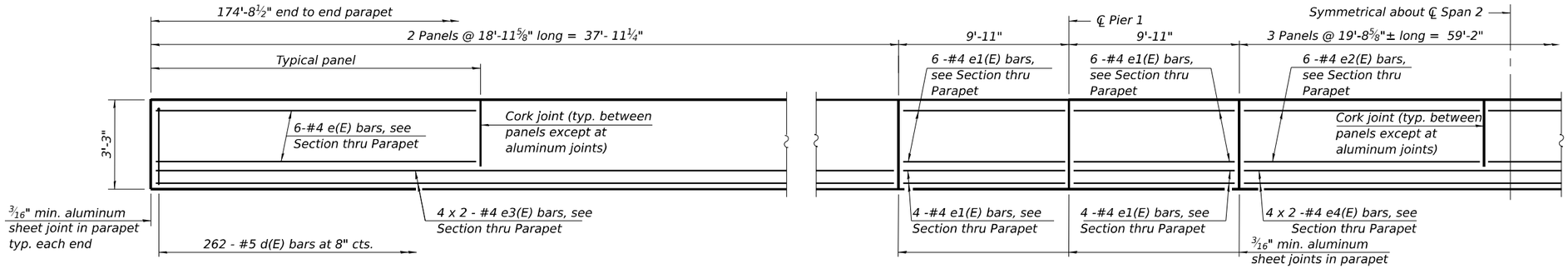

INSIDE ELEVATION OF PARAPET

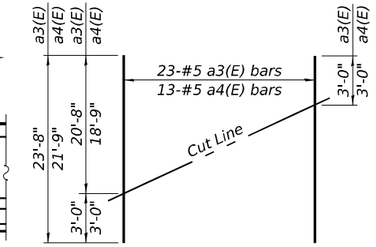

FIELD CUTTING DIAGRAM

Order a3(E) and a4(E) bars full length. Cut as shown and use remainder of bars in opposite end of deck.

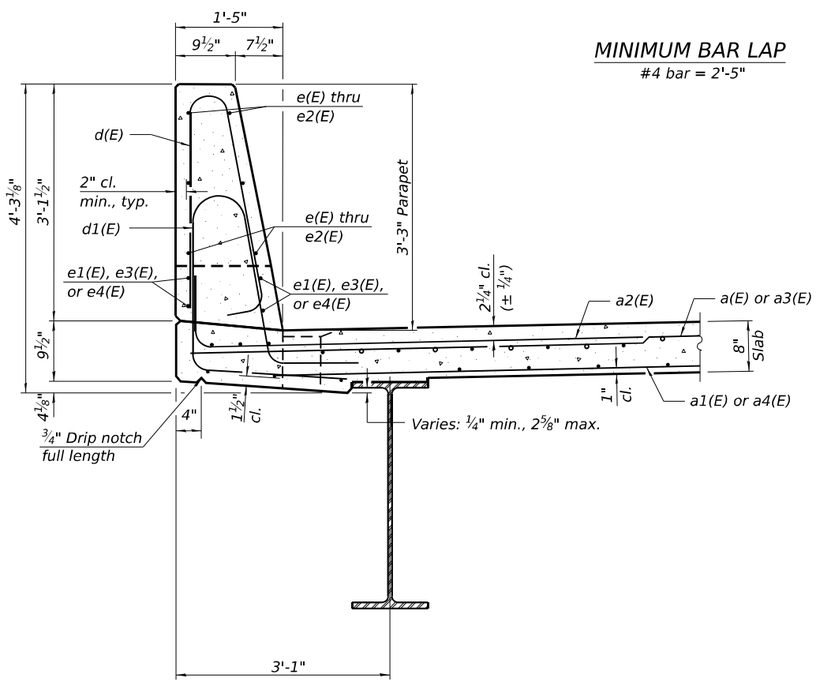

MINIMUM BAR LAP

#4 bar = 2'-5"

SECTION THRU PARAPET

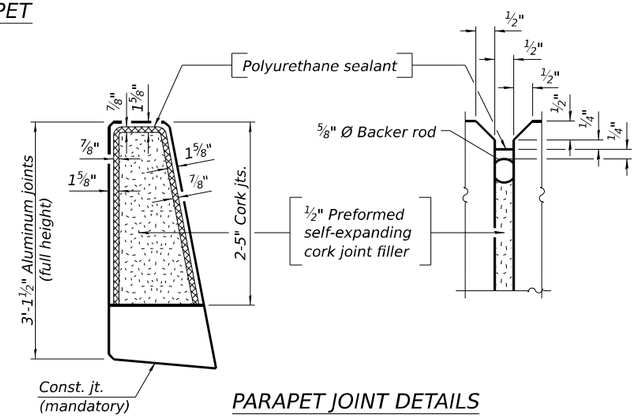

PARAPET JOINT DETAILS

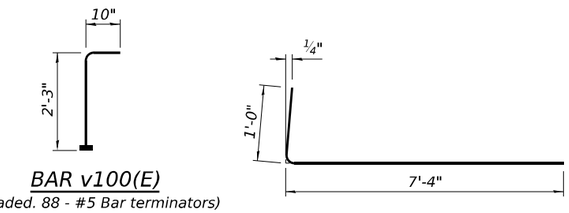

BAR v100(E)

(Headed. 88 - #5 Bar terminators)

BAR a2(E)

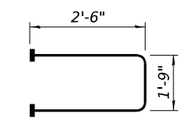

BAR s10(E)

(Headed. 176 - #5 Bar terminators)

Notes:

The 3/16" min. aluminum sheet shall be ASTM B 209 alloy 3003-H14 and coated with 5 mils of either bitumen paint or epoxy paint to minimize reaction with wet concrete. Cost included with Concrete Superstructure.

The polyurethane sealant shall be according to Article 1050.04 of the Std. Spec. and the color shall be gray.

Bar terminators, paid for separately. See Total Bill of Material.

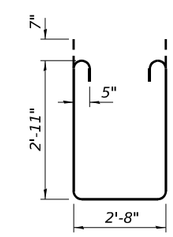

BAR s11(E)

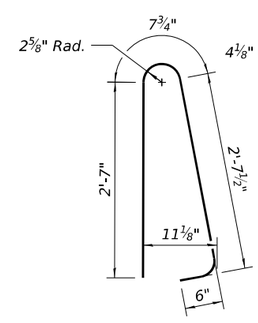

BAR d(E)

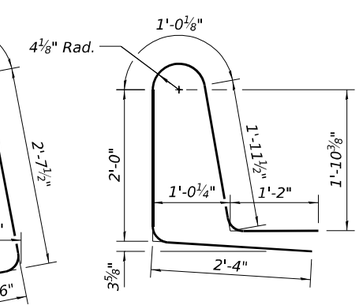

BAR d1(E)

SUPERSTRUCTURE BILL OF MATERIAL

Bar	No.	Size	Length	Shape
a(E)	708	#5	21'-1"	
a1(E)	436	#5	20'-3"	
a2(E)	742	#6	8'-4"	
a3(E)	46	#5	23'-8"	
a4(E)	26	#5	21'-9"	
a5(E)	8	#5	24'-3"	
b(E)	322	#5	28'-0"	
b1(E)	76	#6	40'-8"	
b2(E)	288	#5	24'-11"	
d(E)	524	#5	6'-5"	
d1(E)	524	#5	8'-6"	
e(E)	48	#4	18'-7"	
e1(E)	80	#4	9'-7"	
e2(E)	36	#4	19'-4"	
e3(E)	32	#4	20'-0"	
e4(E)	16	#4	30'-8"	
m10(E)	16	#6	24'-3"	
m11(E)	24	#6	8'-1"	
m12(E)	12	#6	3'-2"	
s10(E)	88	#5	6'-9"	
s11(E)	88	#5	9'-8"	
v100(E)	88	#5	3'-1"	
Reinforcement Bars, Epoxy Coated			Lbs.	70,730
Concrete Superstructure			Cu. Yds.	281.3

Bars indicated thus 1 x 2-#4 etc. indicates 1 line of bars with 2 lengths per line.

MODEL: Default
FILE NAME: P:\2024\240166\B - US 51 over ICRR Bridge Replacement\4 CADD - DWG\4.4 Struc\0390084-78937-012-Superstructure Details.dgn

TWM ENGINEERING GEOSPATIAL SERVICES
TWM, INC.
WWW.TWM-INC.COM
IL DESIGN FIRM LICENSE NO: 184-001220

USER NAME = bpoiter	DESIGNED - TCS	REVISED -	
	CHECKED - BWP	REVISED -	
PLOT SCALE = 0:2.000 ':" / in.	DRAWN - TCS	REVISED -	
PLOT DATE = 8/21/2025	CHECKED - BWP	REVISED -	

STATE OF ILLINOIS
DEPARTMENT OF TRANSPORTATION

SUPERSTRUCTURE DETAILS
STRUCTURE NO. 039-0084

SHEET 12 OF 31 SHEETS

F.A.P. RTE.	SECTION	COUNTY	TOTAL SHEETS	SHEET NO.
322	3VB-3	JACKSON	124	80
		CONTRACT NO. 78937		
	ILLINOIS	FED. AID PROJECT		

8/21/2025 11:09:43 AM

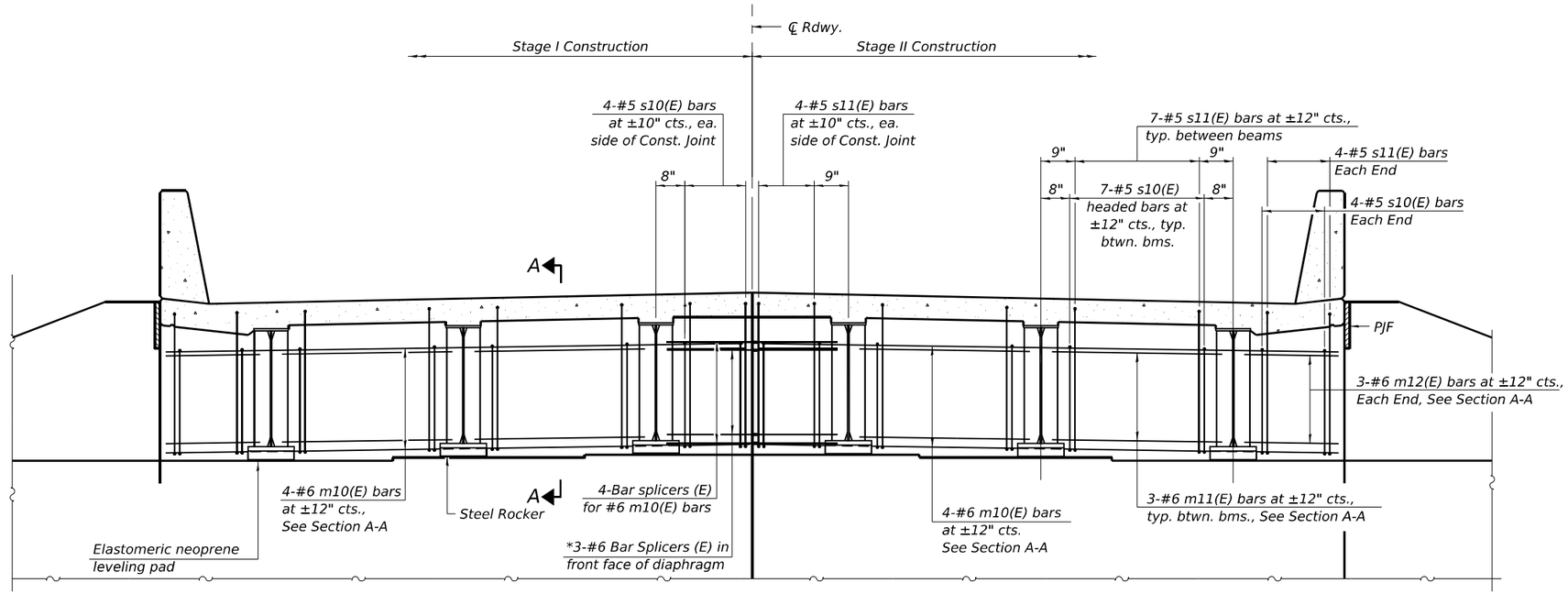

DIAPHRAGM AT ABUTMENT

(Looking East)

*See Sheet 26 of 31 for detail of bar splicer in front face of diaphragm

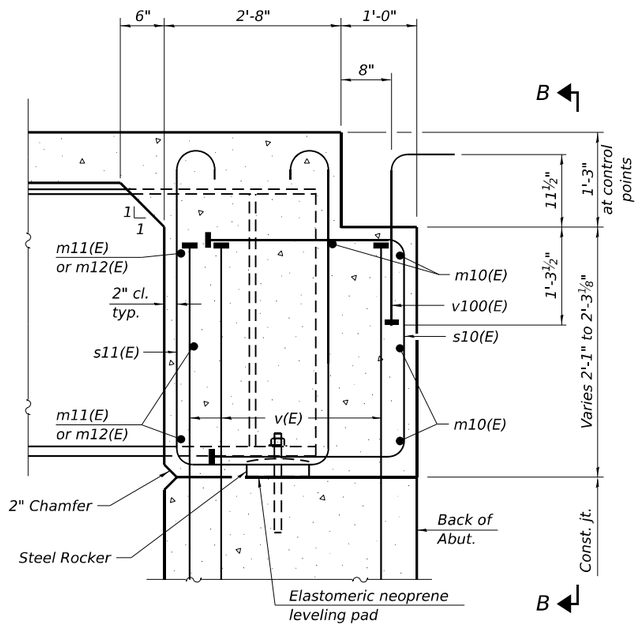

SECTION A-A

(at Rt. ∠'s)

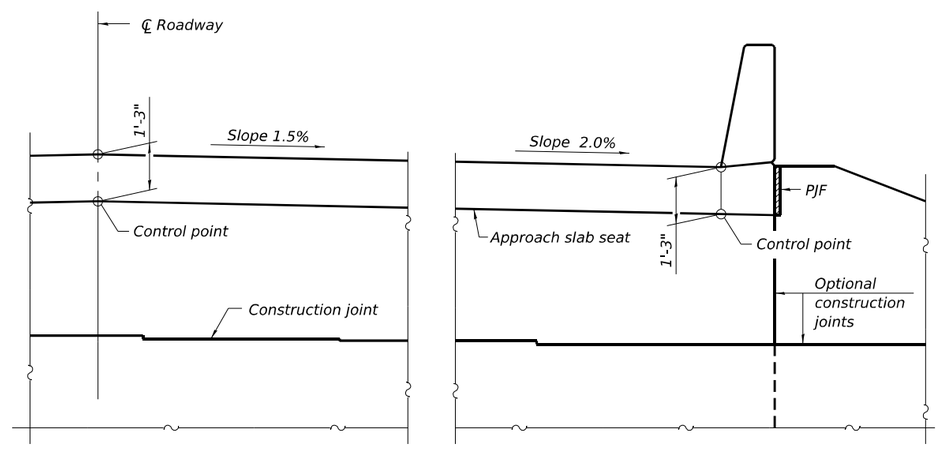

VIEW B-B

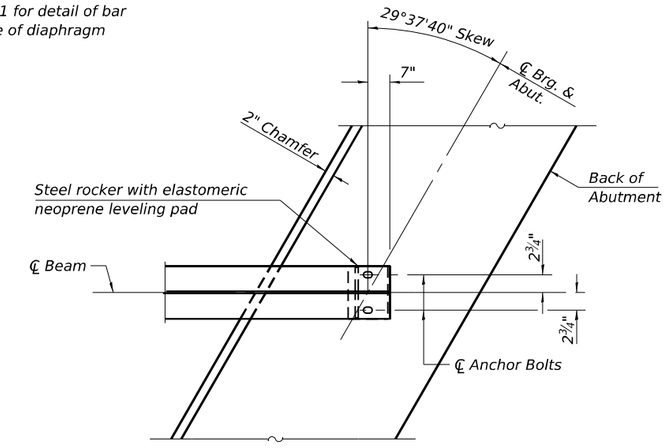

PLAN AT ABUTMENT

(Showing bottom flange of beam)

Notes:
See sheet 11 & 12 of 31 for superstructure details and Bill of Material.
See sheet 14 of 31 for PJF details.
The s10(E) and s11(E) bars shall be placed parallel to the beams. Spacing for these bars shall be at right angles to the beams.
The approach slab seat shall have a constant slope determined from the control points shown.

MODEL: Default
FILE NAME: P:\2024\2401661B - US 51 over ICRR Bridge Replacement4 CADD - DWG\4.4 Struc\0390084-78937-013-Diaphragm Details.dgn
8/21/2025 11:09:43 AM

TWM ENGINEERING GEOSPATIAL SERVICES
TWM, INC. WWW.TWM-INC.COM
IL DESIGN FIRM LICENSE NO: 184-001220

USER NAME = bpoiter	DESIGNED - NDM	REVISED -	
	CHECKED - BWP	REVISED -	
PLOT SCALE = 0:2.000 ':" / in.	DRAWN - NDM	REVISED -	
PLOT DATE = 8/21/2025	CHECKED - BWP	REVISED -	

STATE OF ILLINOIS
DEPARTMENT OF TRANSPORTATION

DIAPHRAGM DETAILS
STRUCTURE NO. 039-0084

SHEET 13 OF 31 SHEETS

F.A.P. RTE.	SECTION	COUNTY	TOTAL SHEETS	SHEET NO.
322	3VB-3	JACKSON	124	81
		CONTRACT NO. 78937		
	ILLINOIS	FED. AID PROJECT		

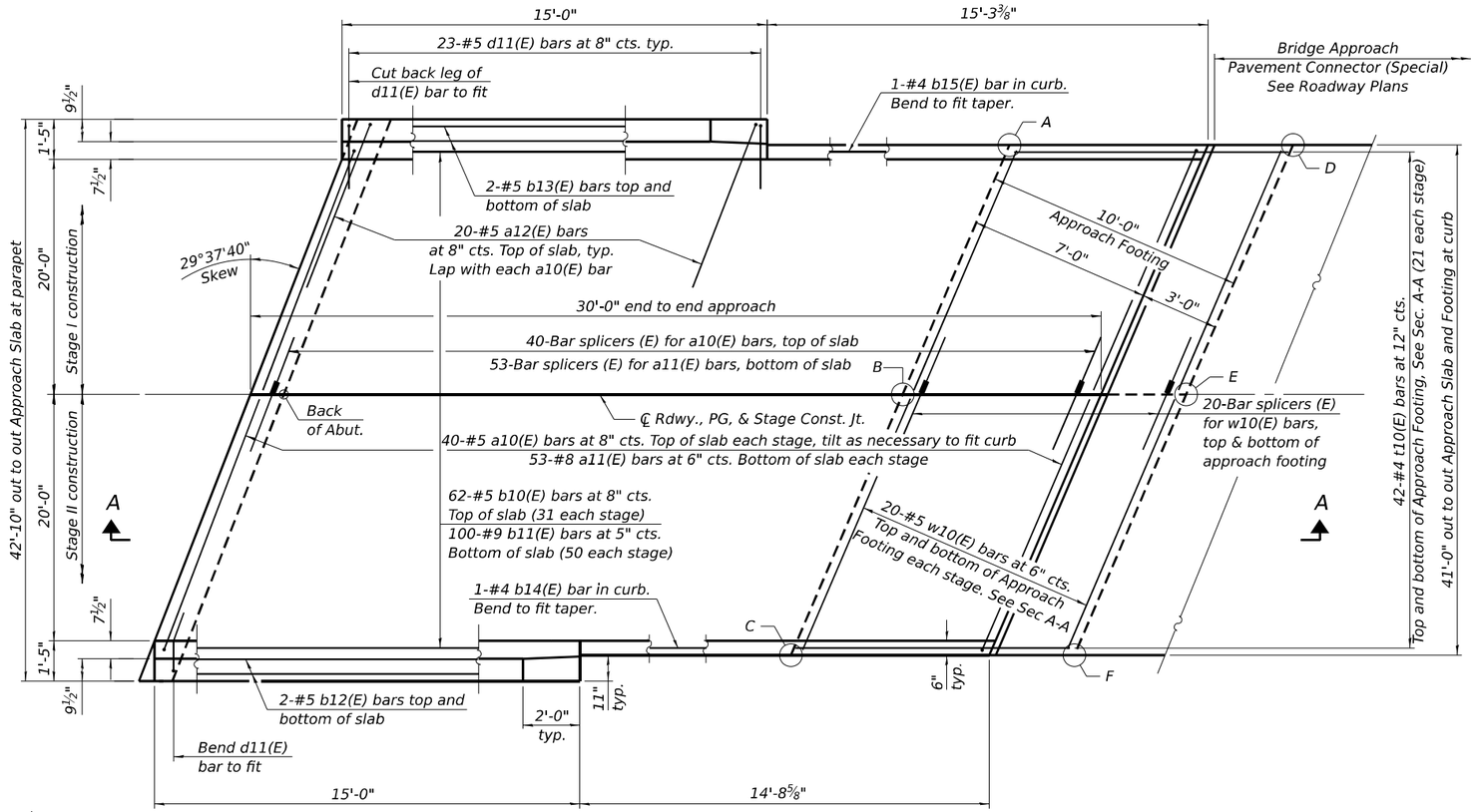

PLAN

(East approach slab shown; West approach slab similar by 180° rotation)

TOP AND BOTTOM ELEVATIONS FOR APPROACH FOOTING

West Approach			East Approach		
Point/ Location	Top	Bottom	Point/ Location	Top	Bottom
A - SE	441.44	440.61	A - NW	441.60	440.77
B - E ℄	441.89	441.05	B - W ℄	442.03	441.19
C - NE	441.62	440.79	C - SW	441.74	440.91
D - SW	441.35	440.51	D - NE	441.52	440.68
E - W ℄	441.80	440.96	E - E ℄	441.95	441.12
F - NW	441.54	440.70	F - SE	441.74	440.91

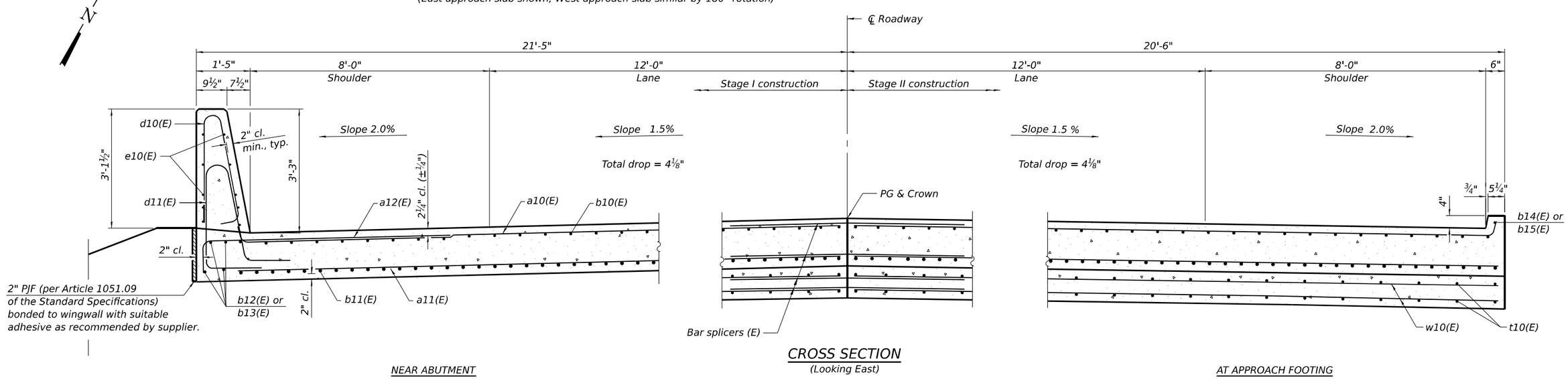

NEAR ABUTMENT

CROSS SECTION

(Looking East)

AT APPROACH FOOTING

(Sheet 1 of 2)

MODEL: Default
FILE NAME: P:\2024\240166B - US 51 over ICRR Bridge Replacement\4 CADD - DWG\4.4 Struct\0390084-78937-014-Bridge Approach Slab Details.dgn
8/21/2025 11:09:44 AM

TWM ENGINEERING GEOSPATIAL SERVICES
TWM, INC. WWW.TWM-INC.COM
IL DESIGN FIRM LICENSE NO: 184-001220

USER NAME = bpolter	DESIGNED - NDM	REVISED -	
	CHECKED - JBE	REVISED -	
PLOT SCALE = 0:2.000 ':" / in.	DRAWN - NDM	REVISED -	
PLOT DATE = 8/21/2025	CHECKED - JBE	REVISED -	

STATE OF ILLINOIS
DEPARTMENT OF TRANSPORTATION

BRIDGE APPROACH SLAB DETAILS
STRUCTURE NO. 039-0084

SHEET 14 OF 31 SHEETS

F.A.P. RTE.	SECTION	COUNTY	TOTAL SHEETS	SHEET NO.
322	3VB-3	JACKSON	124	82

CONTRACT NO. 78937
ILLINOIS FED. AID PROJECT

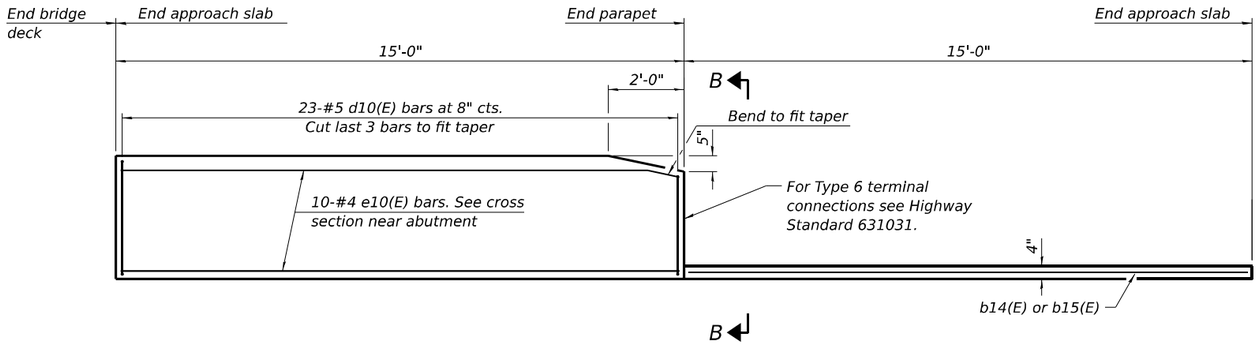

INSIDE ELEVATION OF PARAPET AND CURB

Notes:

The joint opening shall be adjusted for temperature per Article 520.04 of the Standard Specifications. However, since this detail is for jointless structures, the length of bridge used to calculate the adjustment shall be equal to half the total bridge length plus the length of the bridge approach slab.

Parapet concrete shall be paid for as Concrete Superstructure.

Approach slab shall be paid for as Concrete Superstructure (Approach Slab).

Approach footing concrete shall be paid for as Concrete Structures.

The approach footing maximum applied service bearing pressure (Qmax) = 2.0 ksf.

Cost of excavation for approach footing included with Concrete Structures.

For Granular Backfill for Structures and drainage treatment details, see sheet 2 of 31.

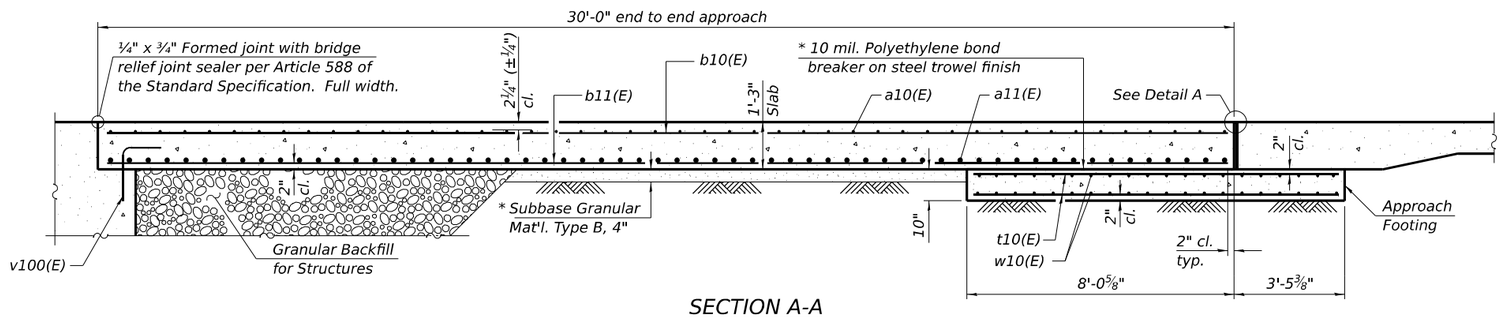

SECTION A-A

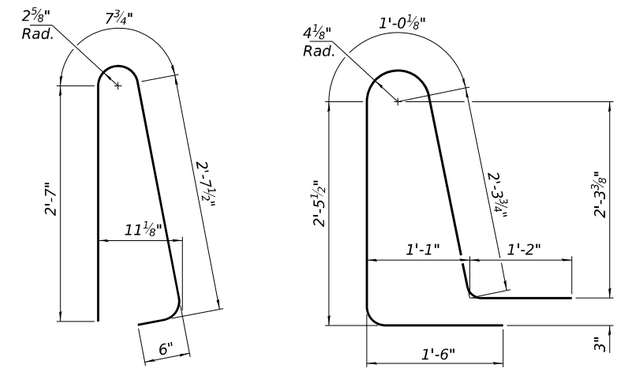

BAR d10(E)

BAR d11(E)

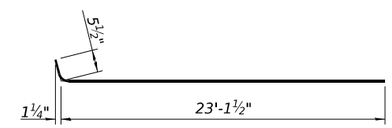

BAR a10(E)

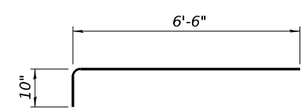

BAR a12(E)

TWO APPROACHES
BILL OF MATERIAL

Bar	No.	Size	Length	Shape
a10(E)	160	#5	23'-7"	
a11(E)	212	#8	23'-3"	
a12(E)	80	#5	7'-4"	
b10(E)	124	#5	29'-8"	
b11(E)	200	#9	29'-8"	
b12(E)	8	#5	15'-4"	
b13(E)	8	#5	14'-6"	
b14(E)	2	#4	14'-6"	
b15(E)	2	#4	14'-9"	
d10(E)	92	#5	6'-5"	
d11(E)	92	#5	8'-6"	
e10(E)	40	#4	14'-8"	
t10(E)	168	#4	11'-2"	
w10(E)	160	#5	23'-3"	
Concrete Superstructure			Cu. Yd.	7.8
Concrete Superstructure (Approach Slab)			Cu. Yd.	116.8
Concrete Structures			Cu. Yd.	29.2
Reinforcement Bars, Epoxy Coated			Pound	48,960

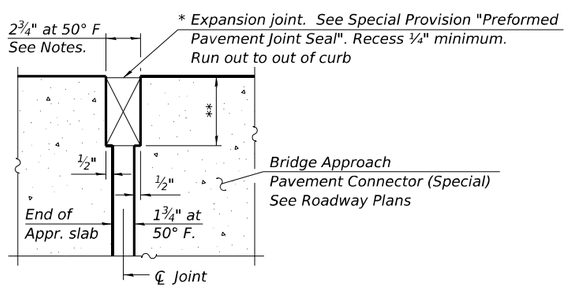

DETAIL A
(at Rt. ∠'s)

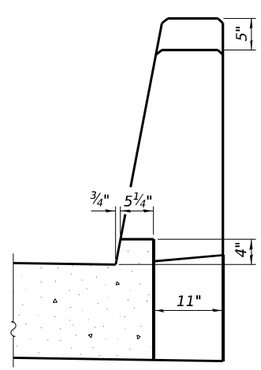

VIEW B-B

* Cost included with Concrete Superstructure (Approach Slab).

** Per manufacturer recommendations

(Sheet 2 of 2)

MODEL: Default
FILE NAME: P:\2024\240166B - US 51 over ICRR Bridge Replacement\4 CADD - DWG\4.4 Struc\0390084-78937-015-Bridge Approach Slab Details.dgn
8/27/2025 10:32:29 AM

TWM ENGINEERING GEOSPATIAL SERVICES
TWM, INC.
WWW.TWM-INC.COM
IL DESIGN FIRM LICENSE NO: 184-001220

USER NAME = bpolter	DESIGNED - NDM	REVISED -	
	CHECKED - JBE	REVISED -	
PLOT SCALE = 0:2.000 ':' / in.	DRAWN - NDM	REVISED -	
PLOT DATE = 8/27/2025	CHECKED - JBE	REVISED -	

STATE OF ILLINOIS
DEPARTMENT OF TRANSPORTATION

BRIDGE APPROACH SLAB DETAILS
STRUCTURE NO. 039-0084

SHEET 15 OF 31 SHEETS

F.A.P. RTE.	SECTION	COUNTY	TOTAL SHEETS	SHEET NO.
322	3VB-3	JACKSON	124	83
		CONTRACT NO. 78937		
		ILLINOIS	FED. AID PROJECT	

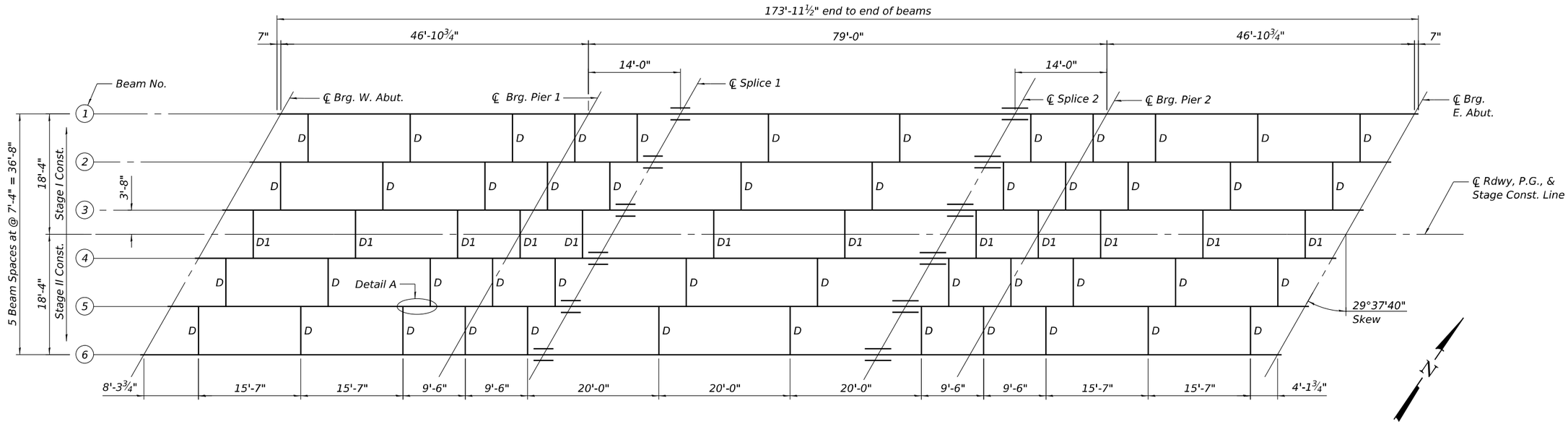

FRAMING PLAN

(All beams are W30x148, AASHTO M270 Grade 50, CVN)

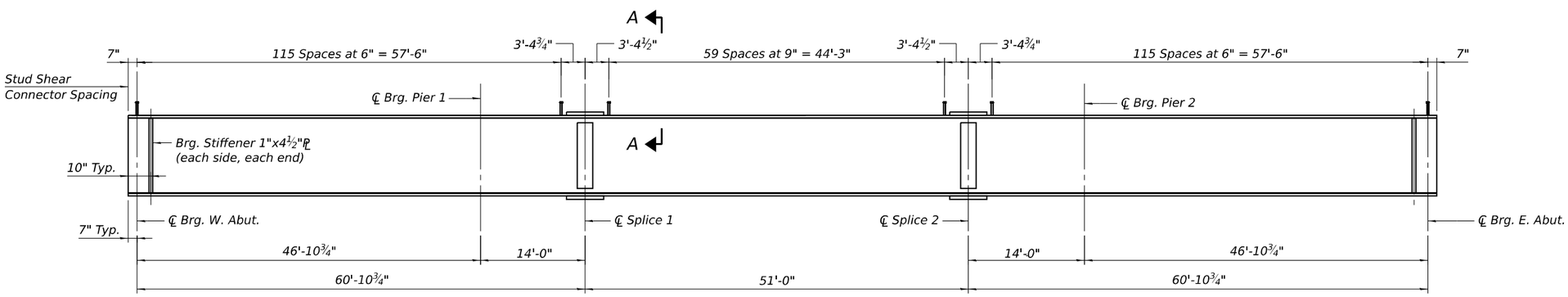

BEAM ELEVATION

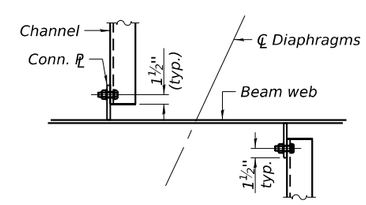

DETAIL A

*TOP OF BEAM ELEVATIONS

	℄ Brg. W. Abut.	℄ Brg. Pier 1	Splice 1	Splice 2	℄ Brg. Pier 2	℄ Brg. E. Abut.
Beam 1	442.33	442.44	442.48	442.48	442.44	442.33
Beam 2	442.45	442.57	442.61	442.63	442.59	442.49
Beam 3	442.53	442.67	442.71	442.74	442.71	442.62
Beam 4	442.51	442.66	442.70	442.74	442.72	442.64
Beam 5	442.37	442.54	442.58	442.64	442.62	442.55
Beam 6	442.20	442.38	442.43	442.50	442.48	442.42

*For Fabrication use only

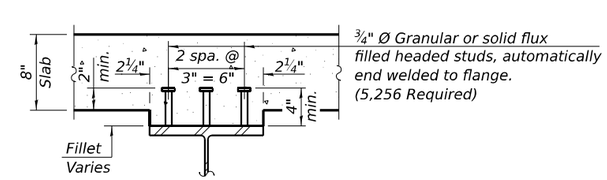

SECTION A-A

Load carrying components designated "CVN" shall conform to the Charpy-V Notch Impact Energy Requirement, Zone 2.

All diaphragms shall be installed as steel is erected and secured with erection pins and bolts except as otherwise noted. Individual cross frames or diaphragms at supports may be temporarily disconnected to install bearing anchor bolts.

See Sheet 17 & 18 of 31 for additional notes and details.

Notes:

Two hardened washers required for each set of oversized holes.

Alternate channels of equal depth and larger weight are permitted to facilitate material acquisition. Alternate channels, if utilized, shall be provided at no additional cost to the Department.

All splice plates and bearing stiffeners shall be AASHTO M270, Grade 50.

Load carrying components designated "CVN" shall conform to the Charpy-V Notch Impact Energy Requirement, Zone 2.

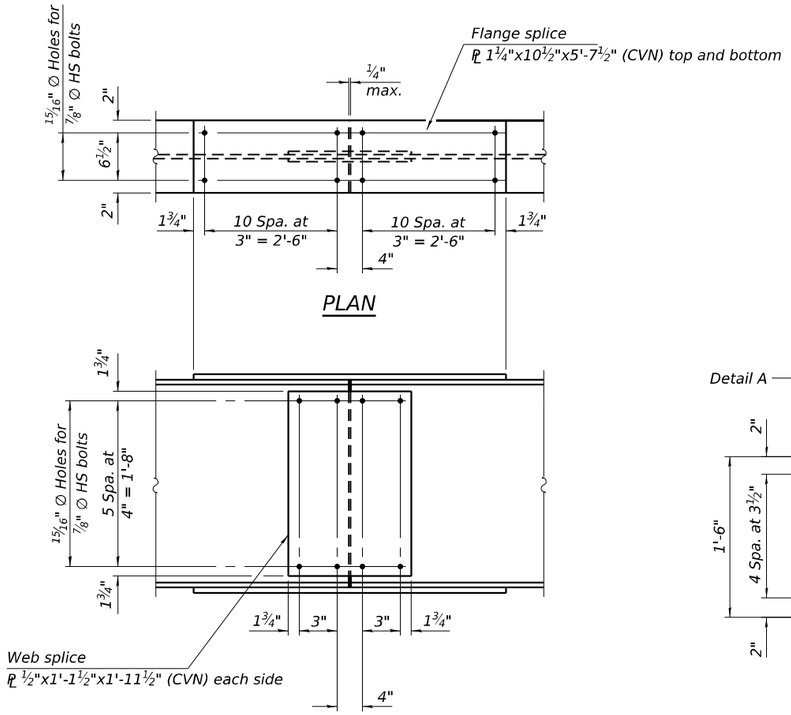

PLAN

ELEVATION

SPLICE DETAIL

(12 Required)

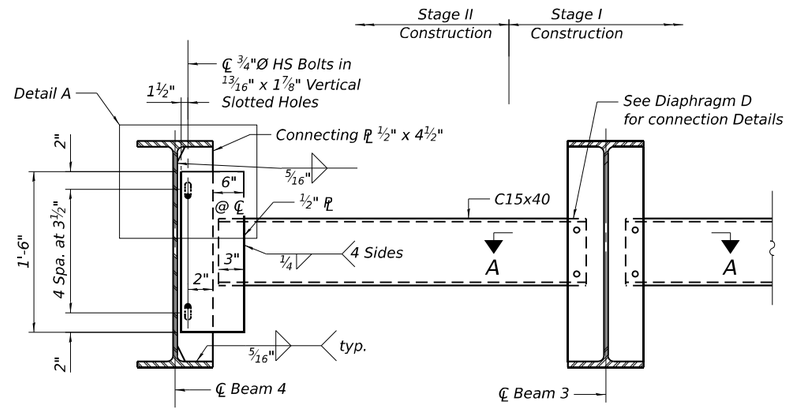

INTERIOR DIAPHRAGM D1

(12 Required)

See Weld Limits and Clip Details for information not shown

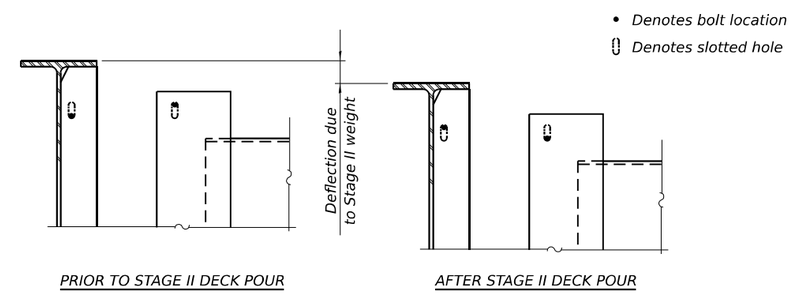

DETAIL A

The Fabricator shall detail connection plate locations on channel to allow for differential deflection during Stage II deck pour. The bolts shall be finger tight until the Stage II deck concrete is poured, allowing the Stage II girders to deflect vertically without stressing the D1 diaphragms or Stage I girders. The bolts shall be fully tightened after the Stage II deck concrete is poured.

The D1 diaphragm connection shall be detailed so that the centerline of girder web and centerline of diaphragm channel align in their final position.

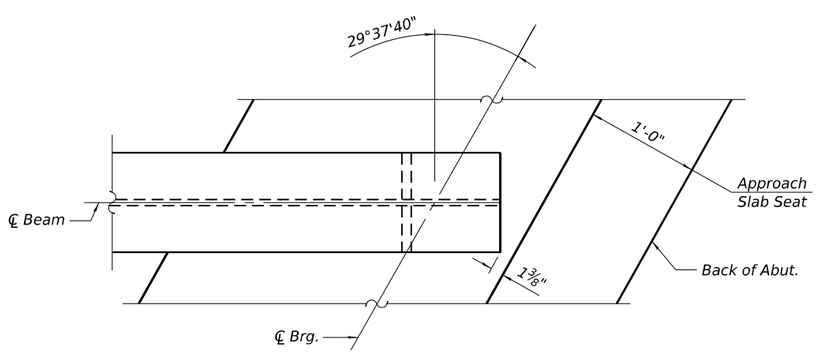

TOP FLANGE PLAN

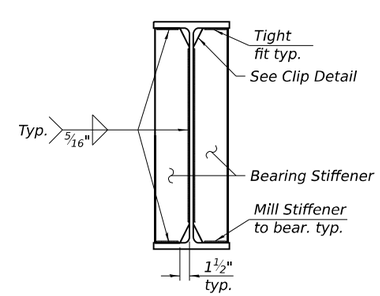

BEARING STIFFENER AT ABUTMENTS DETAIL

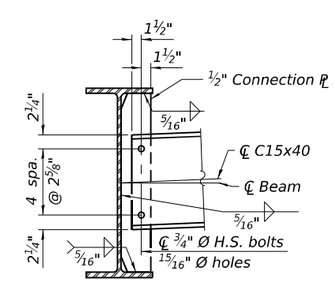

INTERIOR DIAPHRAGM D

(48 Required)

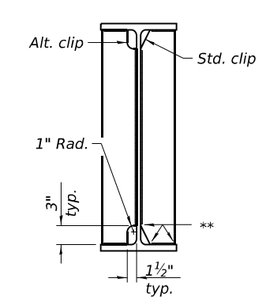

WELD LIMITS AND CLIP DETAILS

** Stop welds ¼" (±⅛") from edges as shown. Typical.

MODEL: Default
FILE NAME: P:\2024\240166B - US 51 over ICRR Bridge Replacement\4 CADD - DWG\4.4 Struc\0390084-78937-017-Structural Steel Details.dgn

TWM ENGINEERING GEOSPATIAL SERVICES	TWM, INC. WWW.TWM-INC.COM IL DESIGN FIRM LICENSE NO: 184-001220	USER NAME = bpolter	DESIGNED - TCS	REVISED -	STATE OF ILLINOIS DEPARTMENT OF TRANSPORTATION
			CHECKED - BWP	REVISED -	
		PLOT SCALE = 0:2.000 ':" / in.	DRAWN - TCS	REVISED -	
		PLOT DATE = 8/21/2025	CHECKED - BWP	REVISED -	

STRUCTURAL STEEL DETAILS
STRUCTURE NO. 039-0084

SHEET 17 OF 31 SHEETS

F.A.P. RTE.	SECTION	COUNTY	TOTAL SHEETS	SHEET NO.
322	3VB-3	JACKSON	124	85
		CONTRACT NO. 78937		
		ILLINOIS	FED. AID PROJECT	

8/21/2025 11:09:45 AM

INTERIOR GIRDER MOMENT TABLE				
		0.4 Sp. 1 or 0.6 Sp. 3	Pier 1 or Pier 2	0.5 Sp. 2
I_s	(in^4)	6680	6680	6680
I_c (n)	(in^4)	19042	19042	19042
I_c (3n)	(in^4)	14160	14160	14160
I_c (cr)	(in^4)	-	9124	-
S_s	(in^3)	436	436	436
S_c (n)	(in^3)	656	656	656
S_c (3n)	(in^3)	595	595	595
S_c (cr)	(in^3)	-	501	-
S_x	(in^3)	-	-	-
DC1	(k/')	0.920	0.920	0.920
M_{DC1}	('k)	79	410	307
DC2	(k/')	0.263	0.263	0.263
M_{DC2}	('k)	15	79	58
DW	(k/')	0.333	0.333	0.333
M_{DW}	('k)	28	150	110
LLDF		0.636	0.589	0.555
M_{LL+IM}	('k)	495	580	639
f_f (Strength I)	(ksi)	-	-	-
$M_u + {}^1/_3 f_f S_x$	('k)	1026	1851	1740
$\Phi_f M_n$	('k)	3479	-	3269
f_s DC1	(ksi)	2.17	11.28	8.45
f_s DC2	(ksi)	0.30	1.59	1.17
f_s DW	(ksi)	0.56	3.02	2.22
f_s (LL+IM)	(ksi)	9.06	10.61	11.69
f_f (Service II)	(ksi)	-	-	-
$f_s + {}^{f_f}/_2$ (Service II)	(ksi)	14.82	29.70	27.04
Service II Resistance	(ksi)	47.50	47.50	47.50
$f_s + {}^{f_f}/_3$ (Strength I)	(ksi)	-	46.14	-
$\Phi_f F_n$	(ksi)	-	50	-
V_f	(k)	-	31.5	-

I_s , S_s : Non-composite moment of inertia and section modulus of the steel section used for computing f_s (Total-Strength I, and Service II) due to non-composite dead loads ($in.^4$ and $in.^3$).

I_c (n), S_c (n): Composite moment of inertia and section modulus of the steel and deck based upon the modular ratio, "n", used for computing f_s (Total-Strength I, and Service II) in uncracked sections due to short-term composite live loads ($in.^4$ and $in.^3$).

I_c (3n), S_c (3n): Composite moment of inertia and section modulus of the steel and deck based upon 3 times the modular ratio, "3n", used for computing f_s (Total-Strength I, and Service II) in uncracked sections, due to long-term composite (superimposed) dead loads ($in.^4$ and $in.^3$).

I_c (cr), S_c (cr): Composite moment of inertia and section modulus of the steel and longitudinal deck reinforcement, used for computing f_s (Total-Strength I and Service II) in cracked sections, due to both short-term composite live loads and long-term composite (superimposed) dead loads ($in.^4$ and $in.^3$).

S_x : Section modulus about the major axis of a section to the controlling flange, tension or compression, taken as yield moment with respect to the controlling flange over the yield strength of the controlling flange ($in.^3$).

DC1: Un-factored non-composite dead load (kips/ft.).

M_{DC1}: Un-factored moment due to non-composite dead load (kip-ft.).

DC2: Un-factored long-term composite (superimposed excluding future wearing surface) dead load (kips/ft.).

M_{DC2}: Un-factored moment due to long-term composite (superimposed excluding future wearing surface) dead load (kip-ft.).

DW: Un-factored long-term composite (superimposed future wearing surface only) dead load (kips/ft.).

M_{DW} : Un-factored moment due to long-term composite (superimposed future wearing surface only) dead load (kip-ft.).

LLDF: Live Load Distribution Factor for moment and shear computed according to Article 4.6.2.2 and further IDOT provisions.

M_{LL+IM}: Un-factored live load moment plus dynamic load allowance (impact) (kip-ft.).

M_u : Strength I load combination of factored design moments (kip-ft.).
$1.25\ (M_{DC1} + M_{DC2}) + 1.5\ M_{DW} + 1.75\ M_{LL+IM}$

f_f : Factored calculated flange lateral bending stress as calculated using Article 6.10.1.6 and as further simplified by IDOT provisions (ksi).

$\Phi_f M_n$: Factored nominal flexural resistance of the section determined as specified in Article 6.10.7.1 or A6 as applicable (kip-ft.).

f_s DC1: Un-factored stress at edge of flange for controlling steel flange due to vertical non-composite dead loads as calculated below (ksi).
M_{DC1} / S_s

f_s DC2: Un-factored stress at edge of flange for controlling steel flange due to vertical composite dead loads as calculated below (ksi).
M_{DC2} / S_c (3n) or M_{DC2} / S_c (cr) as applicable.

f_s DW: Un-factored stress at edge of flange for controlling steel flange due to vertical composite future wearing surface loads as calculated below (ksi).
M_{DW} / S_c (3n) or M_{DW} / S_c (cr) as applicable.

f_s (LL+ IM): Un-factored stress at edge of flange for controlling steel flange due to vertical composite live load plus impact loads as calculated below (ksi).
M_{LL+IM} / S_c (n) or M_{LL+IM} / S_c (cr) as applicable.

$f_s + f_f / 2$ (Service II): Sum of stresses as computed below (ksi).
f_s DC1 + f_s DC2 + f_s DW + 1.3 f_s (LL+ IM) + f_f /2

Service II Resistance: Composite ($0.95R_hF_{yf}$) or noncomposite ($0.80R_hF_{yf}$) stress capacity according to Article 6.10.4.2 (ksi).

$f_s + f_f / 3$ (Strength I): Sum of stresses as computed below on non-compact sections (ksi).
1.25 (f_s DC1 + f_s DC2) + 1.5 f_s DW + 1.75 f_s (LL+ IM) + f_f /3

$\Phi_f F_n$: Factored nominal flexural resistance of the section as specified in Article 6.10.7.2 or 6.10.8 as applicable (ksi).

V_f: Maximum factored shear range in span computed according to Article 6.10.10.

OCF: Obtuse Correction Factor according to Article 4.6.2.2.3c or as further simplified by IDOT provisions.

R_{DC1}: Un-factored reaction due to non-composite dead load (kip).

R_{DC2}: Un-factored reaction due to long-term composite (superimposed excluding future wearing surface) dead load (kip).

R_{DW} : Un-factored reaction due to long-term composite (superimposed future wearing surface only) dead load (kip).

R_{LL} : Un-factored live load reaction (kip).

R_{IM} : Un-factored dynamic load allowance (impact) (kip).

R_{Total} (Strength I)(Impact): Strength I load combination of factored design reactions (kip).
$1.25\ (R_{DC1} + R_{DC2}) + 1.5R_{DW} + 1.75\ (R_{LL} + R_{IM})$

R_{Total} (Strength I)(No Impact): Strength I load combination of factored design reactions, not including dynamic load allowance (Impact) (kip).
$1.25\ (R_{DC1} + R_{DC2}) + 1.5R_{DW} + 1.75\ (R_{LL})$

GIRDER REACTION TABLE					
		S. Abut.	Pier 1	Pier 2	N. Abut.
LLDF		0.767	0.767	0.767	0.767
OCF		1.114	-	-	1.114
R_{DC1}	(k)	13.7	66.7	66.7	13.7
R_{DC2}	(k)	2.4	12.7	12.7	2.4
R_{DW}	(k)	4.6	24.2	24.2	4.6
R_{LL}	(k)	59.1	90.8	90.8	59.1
R_{Im}	(k)	15.6	17.8	17.8	15.6
R_{Total} (Strength I)(Impact)	(k)	157.8	325.6	325.6	157.8
R_{Total} (Strength I)(No Impact)	(k)	130.5	294.5	294.5	130.5

Notes:

Anchor bolts at all supports shall be installed as each member is erected unless an equivalent temporary means of lateral restraint is used.

The structural steel plates of the Bearing Assembly shall conform to the requirements of AASHTO M270 Grade 50.

All (embedded and separate) bearing plates, anchor bolts, nuts, washers, and pintles shall be galvanized according to AASHTO M111 or M232 as applicable.

The anchor bolt sizes and grades shown constitute a calculated seismic structural fuse. Substitution of higher diameter and/or grade anchor bolts will not be allowed.

Two ⅛ in. adjusting shims shall be provided for each bearing in addition to all other plates or shims and placed as shown on bearing details.

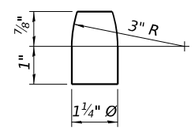

PINTLE

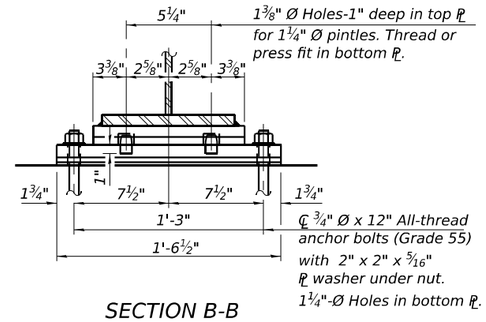

SECTION B-B

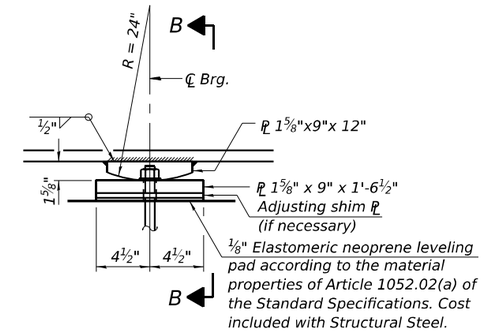

ELEVATION AT PIER

FIXED BEARING AT PIER

(12 Required)

FILL PLATE THICKNESS TABLE

Location	Beam 1	Beam 2	Beam 3	Beam 4	Beam 5	Beam 6
West Abut.	-	-	⅜"	-	-	-
Pier 1	-	-	⅛"	-	-	-
Pier 1	-	-	-	⅛"	-	-
East Abut.	-	-	-	¼"	-	-

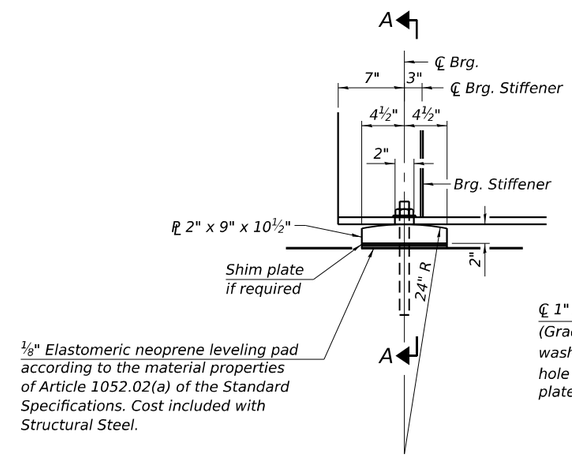

ELEVATION AT ABUTMENT

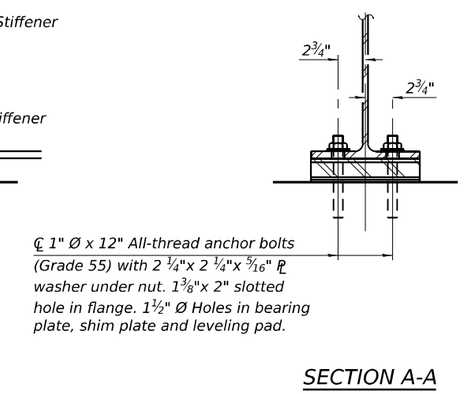

SECTION A-A

FIXED BEARING AT ABUTMENT

(12 Required)

BILL OF MATERIAL

Item	Unit	Total
Anchor Bolts, 1"	Each	24
Anchor Bolts, ¾"	Each	24

MODEL: Default
FILE NAME: P:\2024\240166B - US 51 over ICRR Bridge Replacement\4 CADD - DWG\4.4 Struc\0390084-78937-019-Bearing Details.dgn

TWM ENGINEERING & GEOSPATIAL SERVICES
TWM, INC.
WWW.TWM-INC.COM
IL DESIGN FIRM LICENSE NO: 184-001220

USER NAME = bpolter	DESIGNED - TCS	REVISED -	
	CHECKED - BWP	REVISED -	
PLOT SCALE = 0:2.000 ':" / in.	DRAWN - TCS	REVISED -	
PLOT DATE = 8/27/2025	CHECKED - BWP	REVISED -	

STATE OF ILLINOIS
DEPARTMENT OF TRANSPORTATION

BEARING DETAILS
STRUCTURE NO. 039-0084

SHEET 19 OF 31 SHEETS

F.A.P. RTE.	SECTION	COUNTY	TOTAL SHEETS	SHEET NO.
322	3VB-3	JACKSON	124	87

CONTRACT NO. 78937

ILLINOIS FED. AID PROJECT

8/27/2025 10:32:29 AM

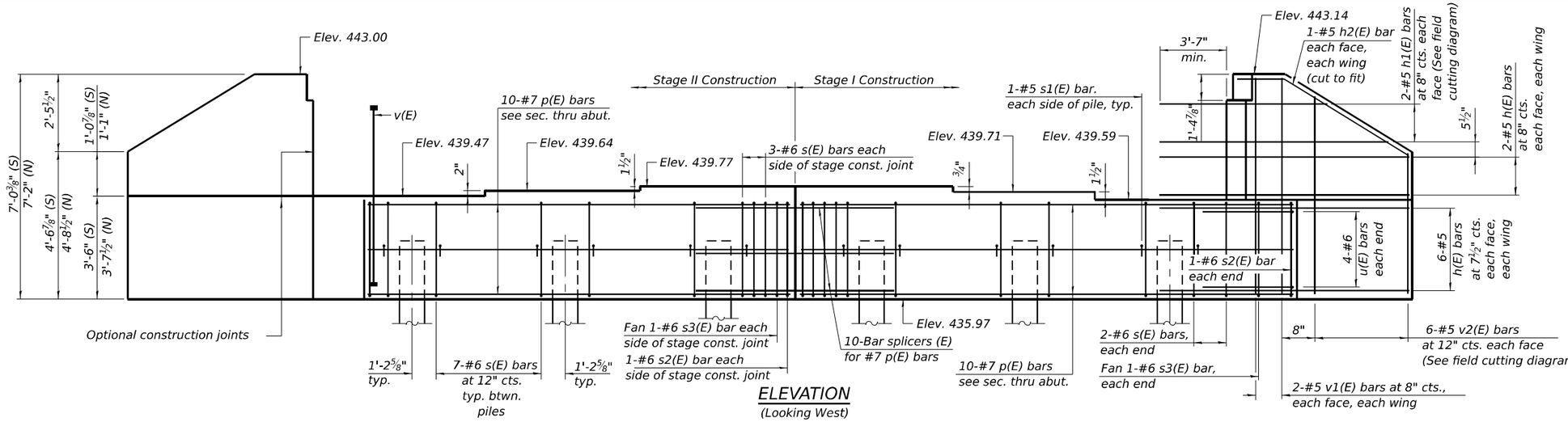

ELEVATION
(Looking West)

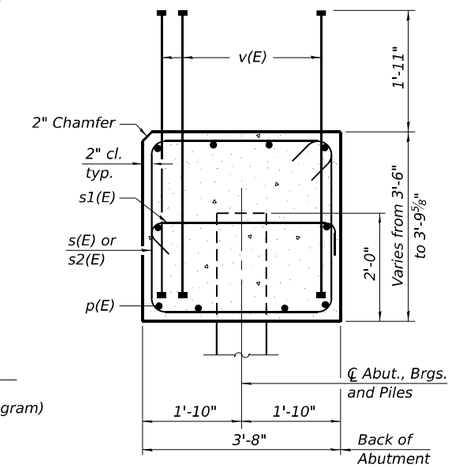

SEC. THRU ABUT.
Dimensions at right angles to abutment.

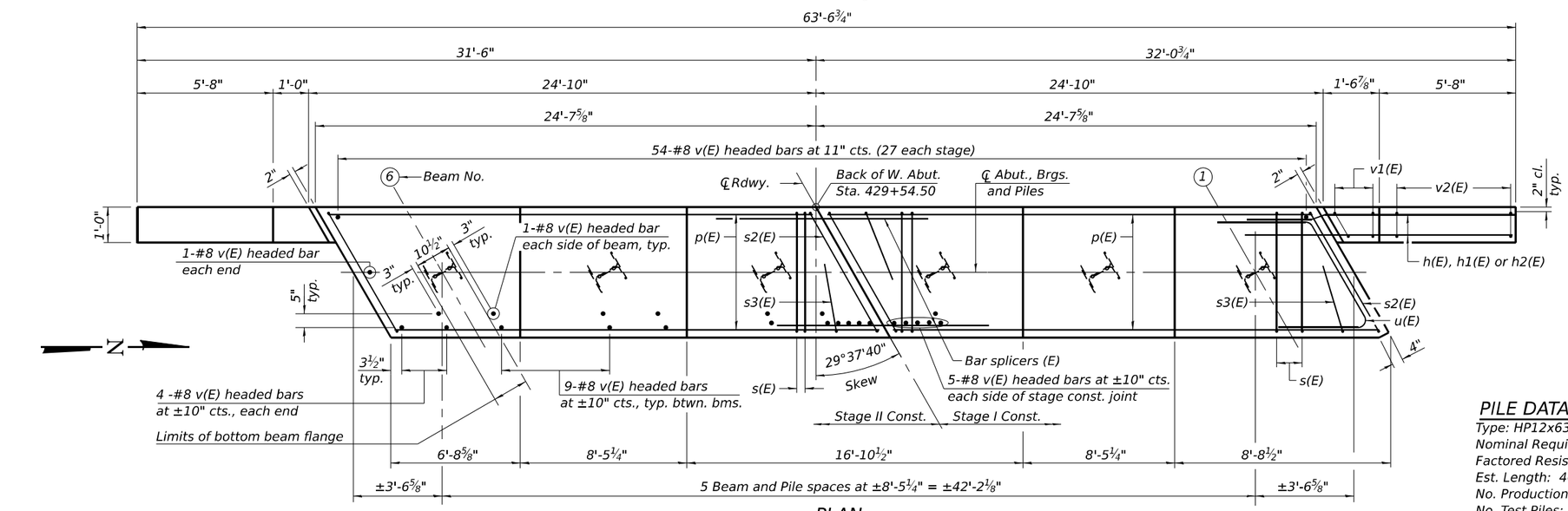

PLAN

BILL OF MATERIAL

Bar	No.	Size	Length	Shape
h(E)	32	#5	10'-9"	
h1(E)	4	#5	18'-6"	
h2(E)	4	#5	7'-4"	
p(E)	20	#7	24'-3"	
s(E)	38	#6	14'-4"	
s1(E)	12	#5	4'-4"	
s2(E)	4	#6	15'-4"	
s3(E)	4	#6	7'-2"	
u(E)	8	#6	12'-4"	
v(E)	122	#8	5'-2"	
v1(E)	8	#5	6'-8"	
v2(E)	12	#5	10'-10"	
Structure Excavation			Cu. Yd.	160
Concrete Structures			Cu. Yd.	28.1
Reinforcement Bars, Epoxy Coated			Pound	4,490
Furnishing Steel Piles HP 12x63			Foot	200
Driving Piles			Foot	200
Test Pile, Steel HP 12x63			Each	1
Pile Shoes			Each	6

PILE DATA
Type: HP12x63
Nominal Required Bearing: 497 kips
Factored Resistance Available: 273 kips
Est. Length: 40 Ft.
No. Production Piles: 5
No. Test Piles: 1

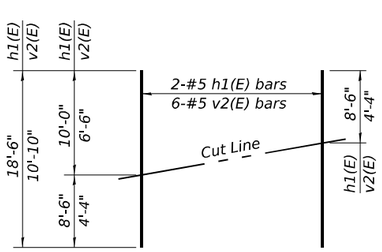

FIELD CUTTING DIAGRAM
Order h1(E) and v2(E) full length. Cut as shown and use remainder of bars in opposite wing.

BAR v(E)
(Headed. 244-#8 Bar terminators each abutment)

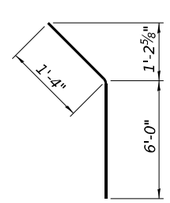

BAR h2(E)

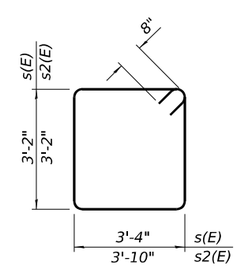

BAR s(E) & s2(E)

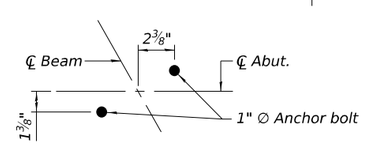

ANCHOR BOLT DETAIL
(See Sheet 19 of 31)

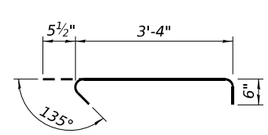

BAR s1(E)

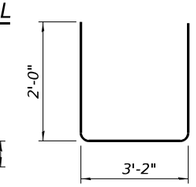

BAR s3(E)

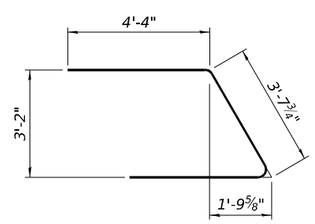

BAR u(E)

Notes:
Pour steps monolithically with cap.
For details of piles see sheet 25 of 31.
Bar terminators, paid for separately.
See Total Bill of Material.
For details of bar splicers, see sheet 26 of 31.

MODEL: Default
FILE NAME: P:\2024\240166\B - US 51 over ICRR Bridge Replacement\4 CADD - DWG\4.4 Struct\0390084-78937-020-West Abutment.dgn

TWM ENGINEERING GEOSPATIAL SERVICES
TWM, INC. WWW.TWM-INC.COM
IL DESIGN FIRM LICENSE NO: 184-001220

USER NAME = bpolter	DESIGNED - NDM	REVISED -	
	CHECKED - JBE	REVISED -	
PLOT SCALE = 0:2.000 ':" / in.	DRAWN - NDM	REVISED -	
PLOT DATE = 8/21/2025	CHECKED - JBE	REVISED -	

STATE OF ILLINOIS
DEPARTMENT OF TRANSPORTATION

WEST ABUTMENT
STRUCTURE NO. 039-0084
SHEET 20 OF 31 SHEETS

F.A.P. RTE.	SECTION	COUNTY	TOTAL SHEETS	SHEET NO.
322	3VB-3	JACKSON	124	88
		CONTRACT NO. 78937		
		ILLINOIS	FED. AID PROJECT	

8/21/2025 11:09:47 AM

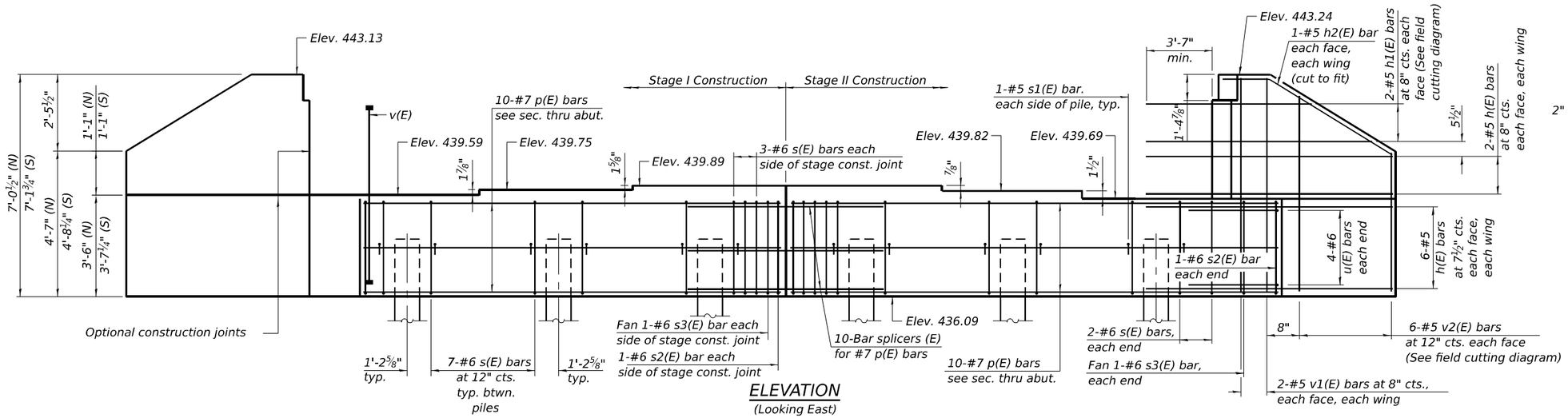

ELEVATION
(Looking East)

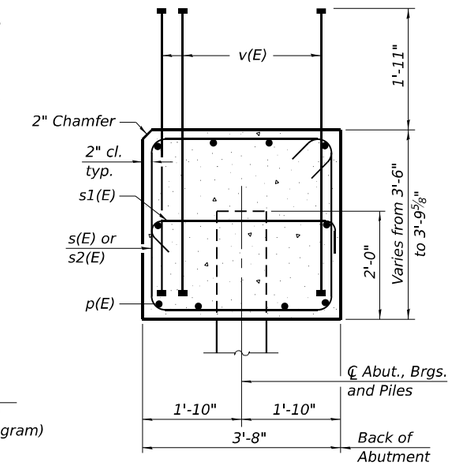

SEC. THRU ABUT.
Dimensions at right angles to abutment.

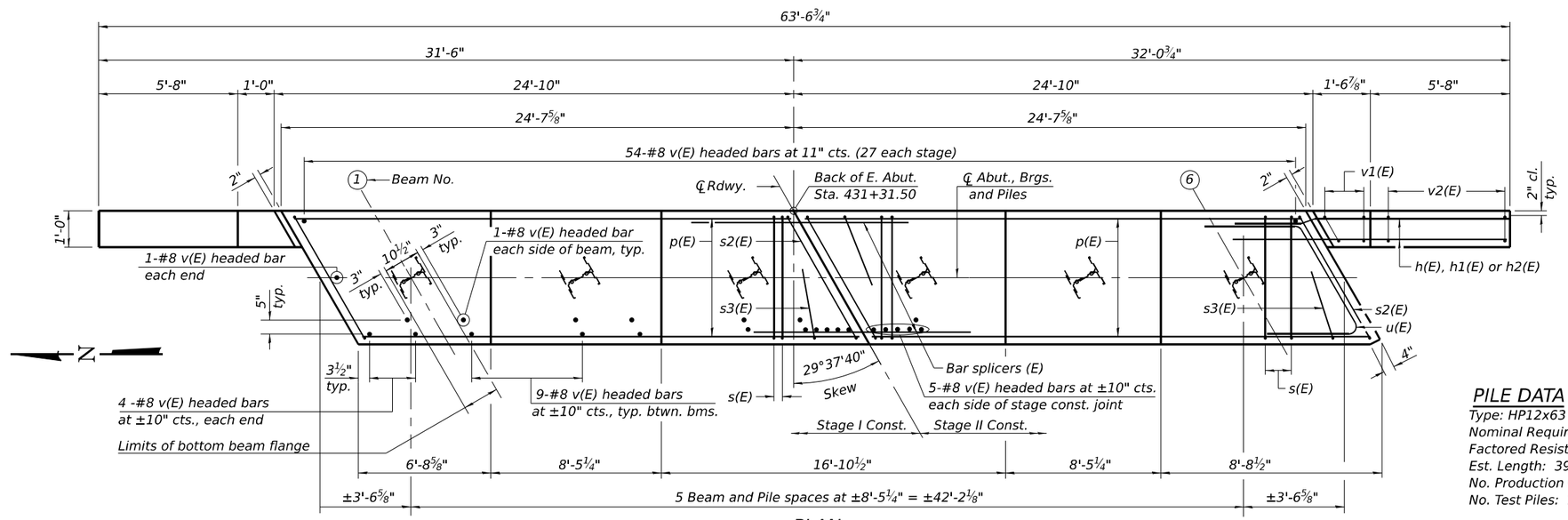

PLAN

BILL OF MATERIAL

Bar	No.	Size	Length	Shape
h(E)	32	#5	10'-9"	
h1(E)	4	#5	18'-6"	
h2(E)	4	#5	7'-4"	
p(E)	20	#7	24'-3"	
s(E)	38	#6	14'-4"	
s1(E)	12	#5	4'-4"	
s2(E)	4	#6	15'-4"	
s3(E)	4	#6	7'-2"	
u(E)	8	#6	12'-4"	
v(E)	122	#8	5'-2"	
v1(E)	8	#5	6'-8"	
v2(E)	12	#5	10'-10"	
Structure Excavation			Cu. Yd.	160
Concrete Structures			Cu. Yd.	28.1
Reinforcement Bars, Epoxy Coated			Pound	4,490
Furnishing Steel Piles HP 12x63			Foot	195
Driving Piles			Foot	195
Test Pile, Steel HP 12x63			Each	1
Pile Shoes			Each	6

PILE DATA
Type: HP12x63
Nominal Required Bearing: 497 kips
Factored Resistance Available: 273 kips
Est. Length: 39 Ft.
No. Production Piles: 5
No. Test Piles: 1

Notes:
Pour steps monolithically with cap.
For details of piles see sheet 25 of 31.
Bar terminators, paid for separately.
See Total Bill of Material.
For details of bar splicers, see sheet 26 of 31.
See Sheet 20 of 31 for additional abutment details.

MODEL: Default
FILE NAME: P:\2024\240166B - US 51 over ICRR Bridge Replacement\4 CADD - DWG\4.4 Struc\0390084-78937-021-East Abutment.dgn
8/21/2025 11:09:48 AM

TWM ENGINEERING & GEOSPATIAL SERVICES
TWM, INC.
WWW.TWM-INC.COM
IL DESIGN FIRM LICENSE NO: 184-001220

USER NAME = bpolter	DESIGNED - NDM	REVISED -	
	CHECKED - JBE	REVISED -	
PLOT SCALE = 0:2.000 ':' / in.	DRAWN - NDM	REVISED -	
PLOT DATE = 8/21/2025	CHECKED - JBE	REVISED -	

STATE OF ILLINOIS
DEPARTMENT OF TRANSPORTATION

EAST ABUTMENT
STRUCTURE NO. 039-0084
SHEET 21 OF 31 SHEETS

F.A.P. RTE.	SECTION	COUNTY	TOTAL SHEETS	SHEET NO.
322	3VB-3	JACKSON	124	89

CONTRACT NO. 78937
ILLINOIS FED. AID PROJECT

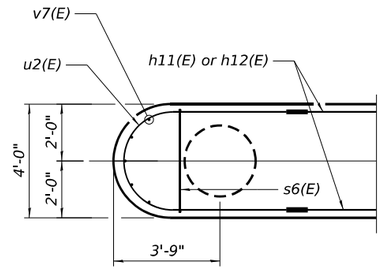

SECTION B-B

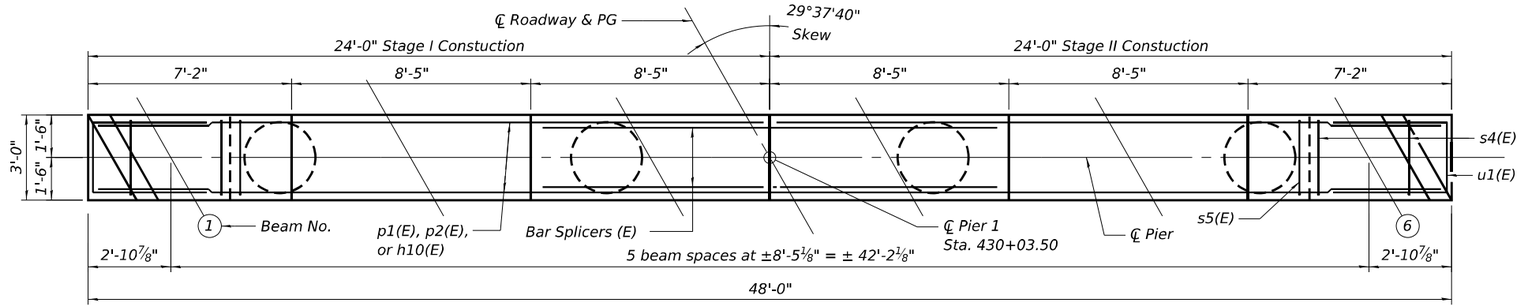

TOP PLAN

Cast steps monolithically with cap.
Space cap reinforcement to miss anchor bolts.
When splicing of spiral reinforcement is necessary, the spirals shall be provided with 1½ extra turns at the ends to be spliced. These additional turns shall both terminate with a 135° standard hook with an extension into the core with a length of six times the spiral bar diameter.
Hooked ends of longitudinal column reinforcement may be oriented outward or inward at the contractor's option to minimize reinforcement congestion and facilitate concrete placement. Hook orientation shall maintain required clear cover and shall not interfere with transverse reinforcement. Up to 25% of the hooked bars in each column may be oriented outward.
See sheet 24 of 31 for Sections C-C, D-D, E-E, F-F, G-G, Rebar Details, Anchor Bolt, Shear Key and Cross-Tie Spacing Details.

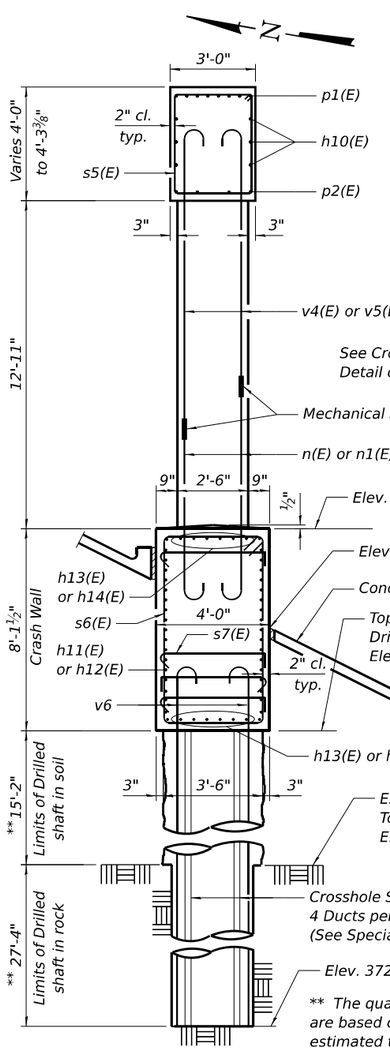

SECTION A-A

** The quantities and reinforcement detailing are based on the top of shaft and the estimated top of rock elevations shown and may change based on the actual top of rock encountered at each shaft and the final top of shaft elevation.

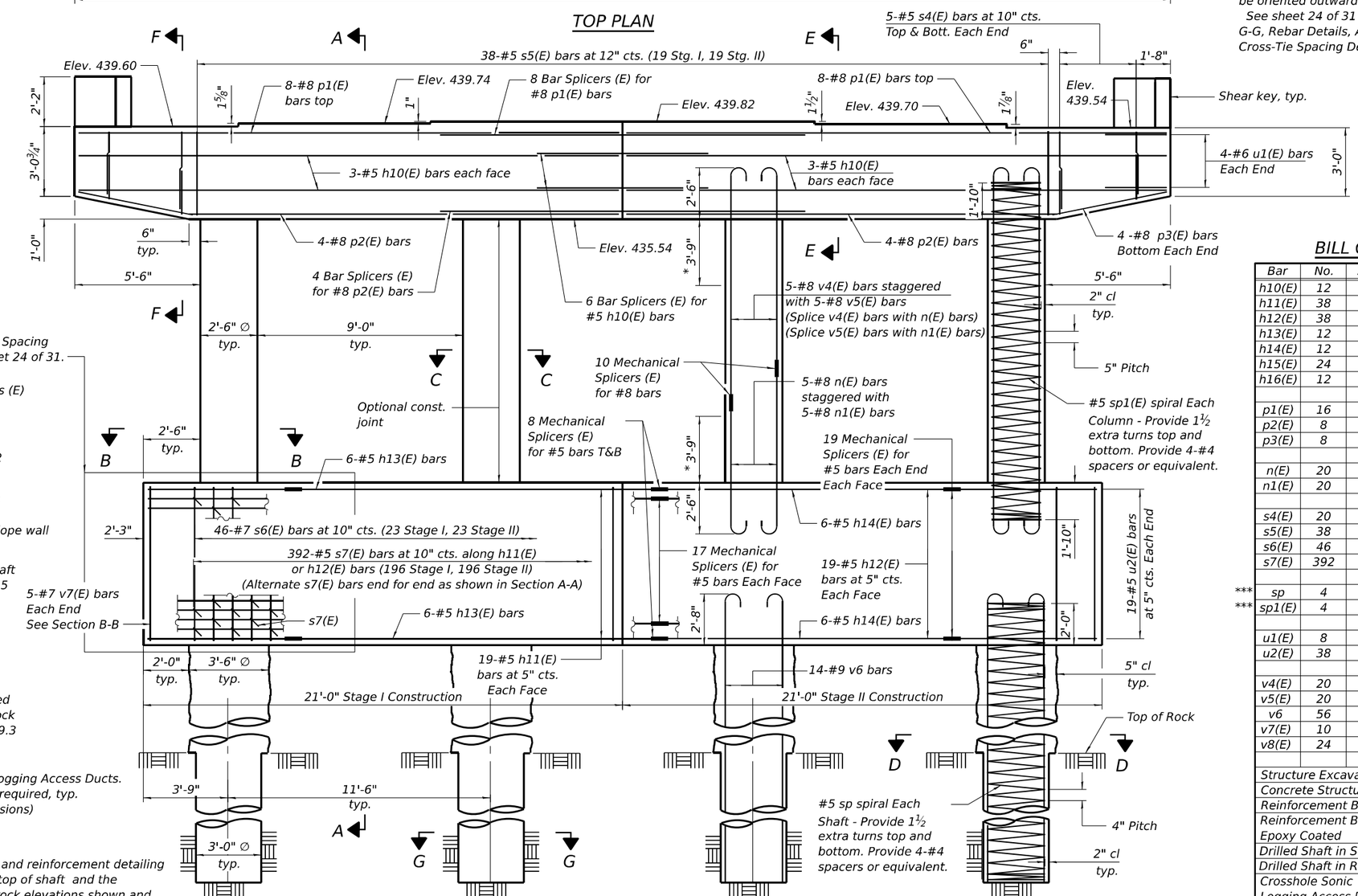

ELEVATION
(Looking East)

* Plastic hinge region. Splicing of longitudinal reinforcment not allowed.

BILL OF MATERIAL

	Bar	No.	Size	Length	Shape
	h10(E)	12	#5	23'-8"	
	h11(E)	38	#5	15'-11"	
	h12(E)	38	#5	13'-5"	
	h13(E)	12	#5	20'-4"	
	h14(E)	12	#5	17'-10"	
	h15(E)	24	#4	3'-0"	
	h16(E)	12	#6	10'-0"	
	p1(E)	16	#8	23'-8"	
	p2(E)	8	#8	18'-10"	
	p3(E)	8	#8	5'-1"	
	n(E)	20	#8	8'-2"	
	n1(E)	20	#8	10'-2"	
	s4(E)	20	#5	8'-8"	
	s5(E)	38	#5	13'-7"	
	s6(E)	46	#7	24'-4"	
	s7(E)	392	#5	4'-8"	
***	sp	4	#5	44'-6"	
***	sp1(E)	4	#5	16'-7"	
	u1(E)	8	#6	11'-2"	
	u2(E)	38	#5	14'-2"	
	v4(E)	20	#8	11'-7"	
	v5(E)	20	#8	9'-7"	
	v6	56	#9	46'-5"	
	v7(E)	10	#7	7'-9"	
	v8(E)	24	#4	4'-0"	
	Structure Excavation		Cu. Yd.	68	
	Concrete Structures		Cu. Yd.	82.0	
	Reinforcement Bars		Pound	13,520	
	Reinforcement Bars, Epoxy Coated		Pound	12,820	
	Drilled Shaft in Soil		Cu. Yd.	21.7	
	Drilled Shaft in Rock		Cu. Yd.	28.6	
	Crosshole Sonic Logging Access Ducts		Foot	170	
	Crosshole Sonic Logging Testing		Each	1	

*** Length is height of spiral.

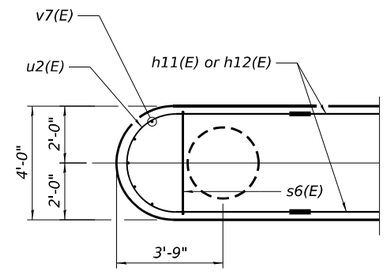

SECTION B-B

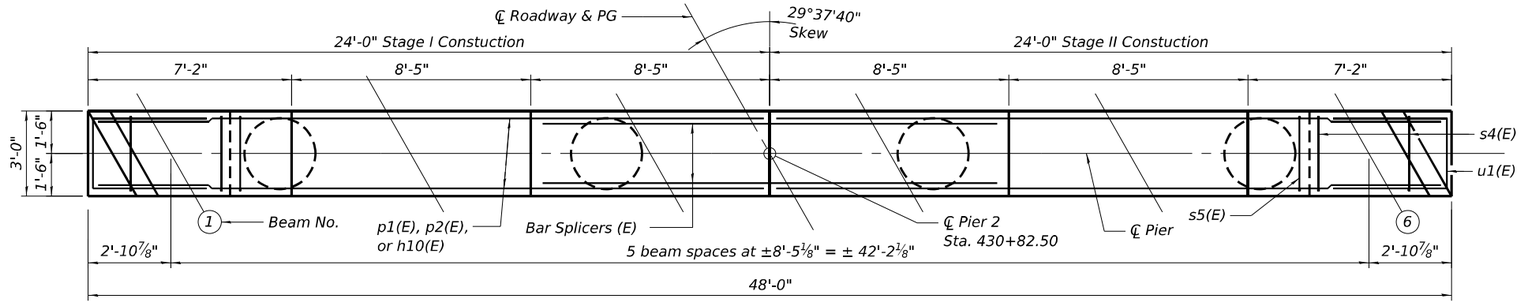

TOP PLAN

Cast steps monolithically with cap.
Space cap reinforcement to miss anchor bolts.
When splicing of spiral reinforcement is necessary, the spirals shall be provided with 1½ extra turns at the ends to be spliced. These additional turns shall both terminate with a 135° standard hook with an extension into the core with a length of six times the spiral bar diameter.
Hooked ends of longitudinal column reinforcement may be oriented outward or inward at the contractor's option to minimize reinforcement congestion and facilitate concrete placement. Hook orientation shall maintain required clear cover and shall not interfere with transverse reinforcement. Up to 25% of the hooked bars in each column may be oriented outward.
See sheet 24 of 31 for Sections C-C, D-D, E-E, F-F, G-G, Rebar Details, Anchor Bolt, Shear Key and Cross-Tie Spacing Details.

*Plastic hinge region. Splicing of longitudinal reinforcment not allowed.

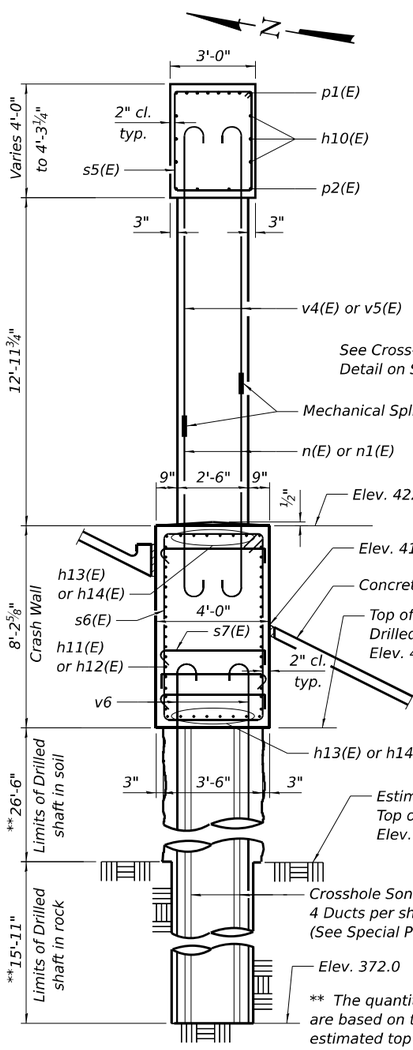

** The quantities and reinforcement detailing are based on the top of shaft and the estimated top of rock elevations shown and may change based on the actual top of rock encountered at each shaft and the final top of shaft elevation.

SECTION A-A

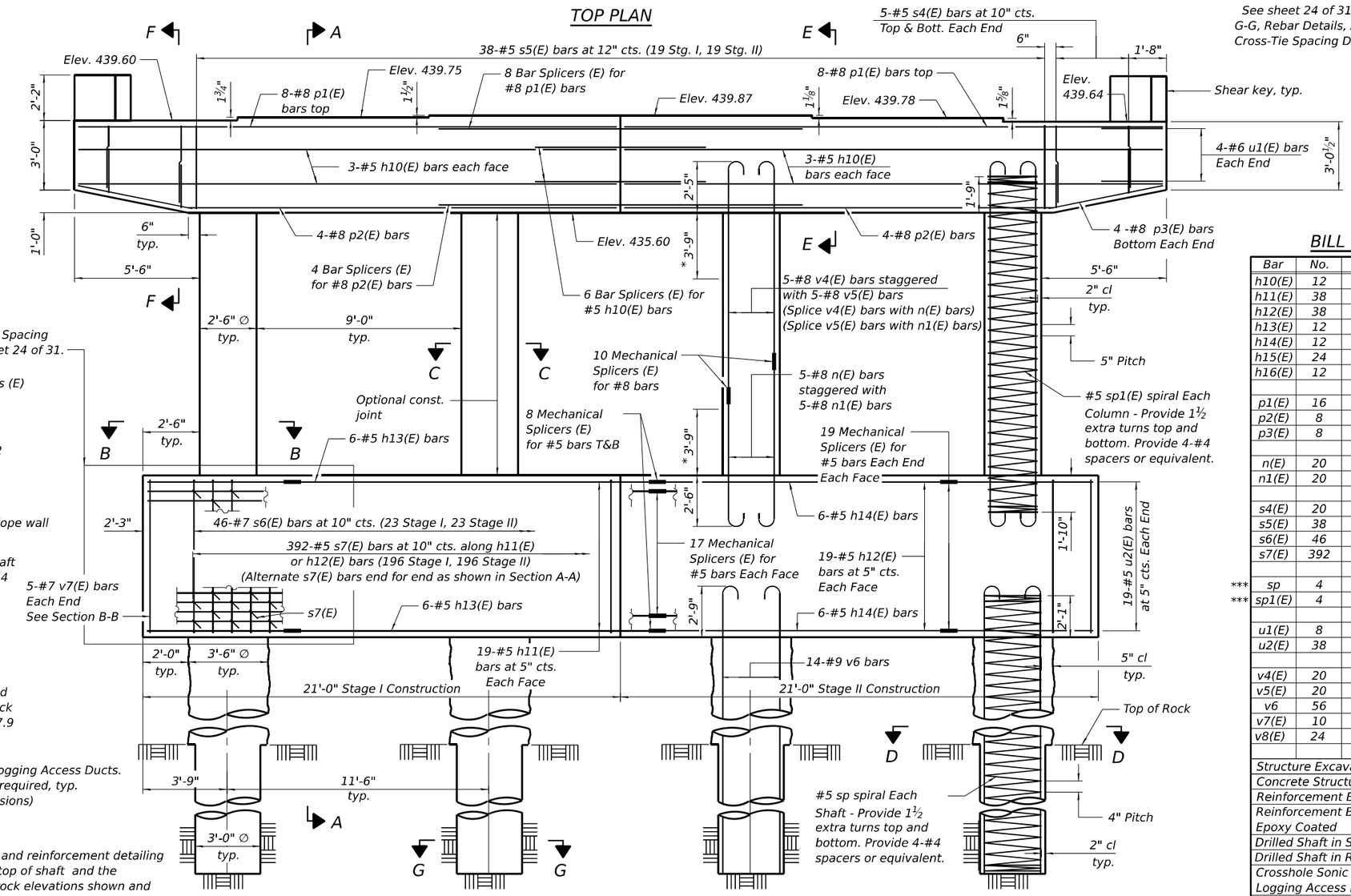

ELEVATION
(Looking East)

BILL OF MATERIAL

	Bar	No.	Size	Length	Shape
	h10(E)	12	#5	23'-8"	
	h11(E)	38	#5	15'-11"	
	h12(E)	38	#5	13'-5"	
	h13(E)	12	#5	20'-4"	
	h14(E)	12	#5	17'-10"	
	h15(E)	24	#4	3'-0"	
	h16(E)	12	#6	10'-0"	
	p1(E)	16	#8	23'-8"	
	p2(E)	8	#8	18'-10"	
	p3(E)	8	#8	5'-1"	
	n(E)	20	#8	8'-2"	
	n1(E)	20	#8	10'-2"	
	s4(E)	20	#5	8'-8"	
	s5(E)	38	#5	13'-7"	
	s6(E)	46	#7	24'-4"	
	s7(E)	392	#5	4'-8"	
***	sp	4	#5	44'-6"	
***	sp1(E)	4	#5	16'-7"	
	u1(E)	8	#6	11'-2"	
	u2(E)	38	#5	14'-2"	
	v4(E)	20	#8	11'-7"	
	v5(E)	20	#8	9'-7"	
	v6	56	#9	46'-5"	
	v7(E)	10	#7	7'-9"	
	v8(E)	24	#4	4'-0"	
	Structure Excavation			Cu. Yd.	68
	Concrete Structures			Cu. Yd.	82.8
	Reinforcement Bars			Pound	13,520
	Reinforcement Bars, Epoxy Coated			Pound	12,820
	Drilled Shaft in Soil			Cu. Yd.	37.8
	Drilled Shaft in Rock			Cu. Yd.	16.7
	Crosshole Sonic Logging Access Ducts			Foot	170
	Crosshole Sonic Logging Testing			Each	1

*** Length is height of spiral.

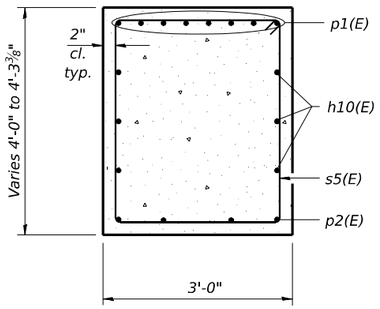

SECTION E-E

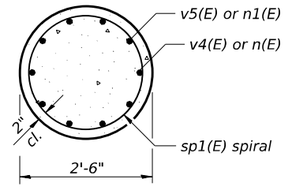

SECTION C-C

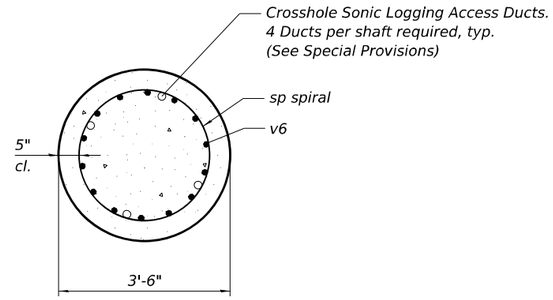

SECTION D-D

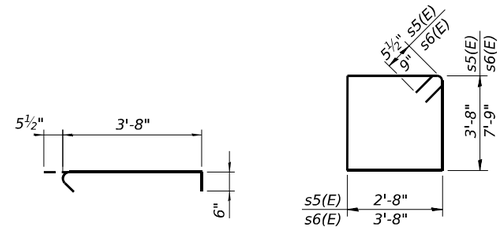

BAR s7(E)

BAR s5(E) & s6(E)

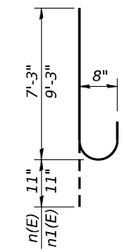

BARS n(E) & n1(E)

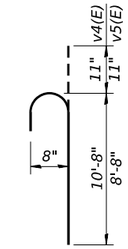

BARS v4(E) & v5(E)

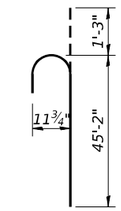

BAR v6

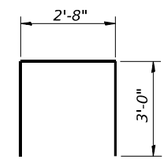

BAR s4(E)

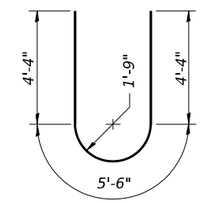

BAR u2(E)

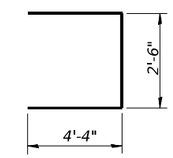

BAR u1(E)

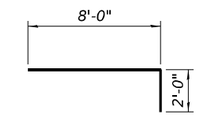

BAR h16(E)

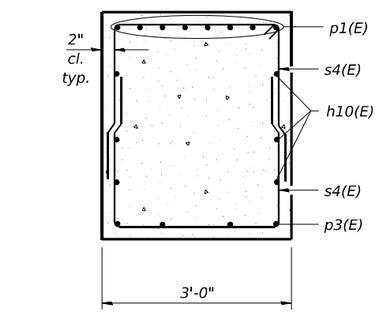

SECTION F-F

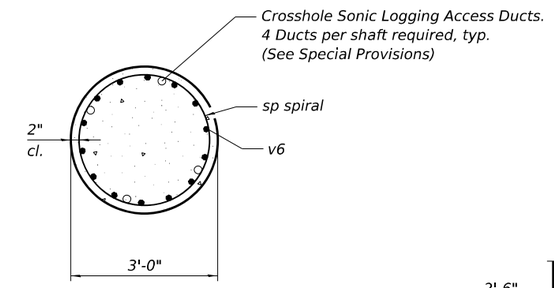

SECTION G-G

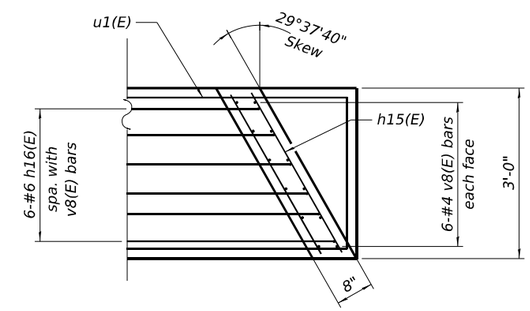

SHEAR KEY PLAN

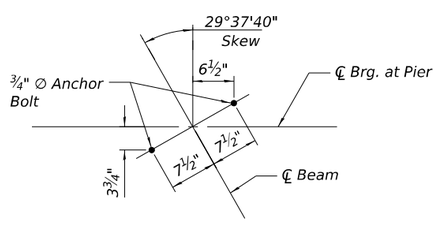

ANCHOR BOLT DETAIL

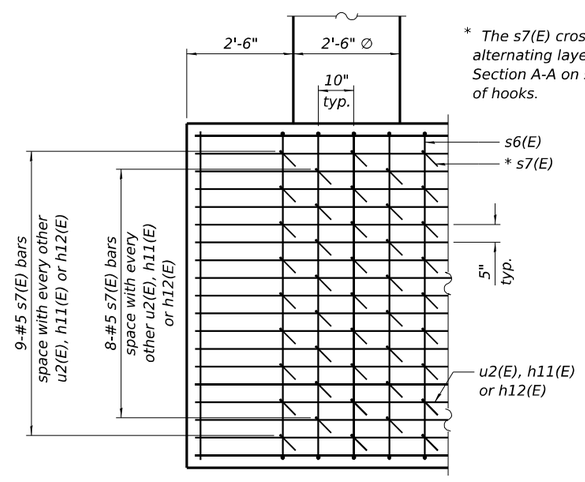

* The s7(E) cross-tie bars shall be placed such that alternating layers of ties have opposing hooks. See Section A-A on sheets 22 and 23 of 31 for orientation of hooks.

CROSS-TIE SPACING DETAIL

See sheets 22 & 23 of 31 for information not shown

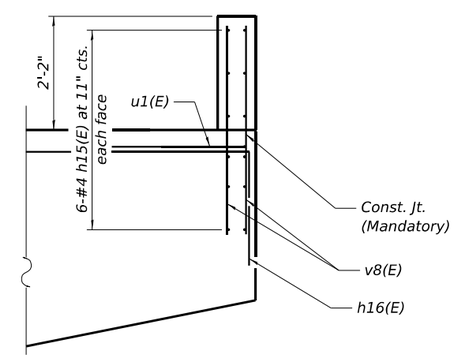

SHEAR KEY ELEVATION

See sheets 22 & 23 of 31 for information not shown

MODEL: Default
FILE NAME: P:\2024\240166\B - US 51 over ICRR Bridge Replacement\4 CADD - DWG\4.4 Struc\039\0084-78937-024-Pier Details.dgn

TWM ENGINEERING GEOSPATIAL SERVICES	TWM, INC. WWW.TWM-INC.COM IL DESIGN FIRM LICENSE NO. 184-001220	USER NAME = bpolter	DESIGNED -	REVISED -	STATE OF ILLINOIS DEPARTMENT OF TRANSPORTATION
			CHECKED - BWP	REVISED -	
		PLOT SCALE = 0:2.000 ':' / in.	DRAWN - TCS	REVISED -	
		PLOT DATE = 8/21/2025	CHECKED - BWP	REVISED -	

PIER DETAILS
STRUCTURE NO. 039-0084
SHEET 24 OF 31 SHEETS

F.A.P. RTE.	SECTION	COUNTY	TOTAL SHEETS	SHEET NO.
322	3VB-3	JACKSON	124	92
		CONTRACT NO. 78937		
	ILLINOIS	FED. AID PROJECT		

8/21/2025 11:09:50 AM

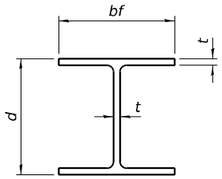

STEEL PILE TABLE

Designation	Depth d	Flange width bf	Web and Flange thickness t	Encasement diameter A
HP 18x181	18	18	1	36"
x157	17¾"	17⅞"	⅞"	36"
x135	17½"	17¾"	¾"	36"
HP 16x183	16½"	16½"	1⅛"	36"
x162	16¼"	16⅛"	1"	36"
x141	16	16	⅞"	36"
x121	15¾"	15⅞"	¾"	36"
HP 14x117	14¼"	14⅞"	13/16"	30"
x102	14"	14¾"	11/16"	30"
x89	13⅞"	14¾"	⅝"	30"
x73	13⅝"	14⅝"	½"	30"
HP 12x84	12¼"	12¼"	11/16"	24"
x74	12⅛"	12¼"	⅝"	24"
x63	12"	12⅛"	½"	24"
x53	11¾"	12"	7/16"	24"
HP 10x57	10"	10¼"	9/16"	24"
x42	9¾"	10⅛"	7/16"	24"
HP 8x36	8"	8⅛"	7/16"	18"

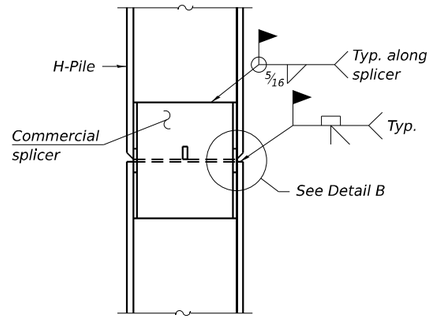

ELEVATION

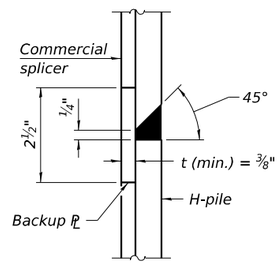

DETAIL B

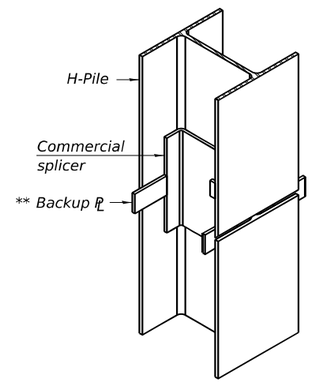

ISOMETRIC VIEW

WELDED COMMERCIAL SPLICE

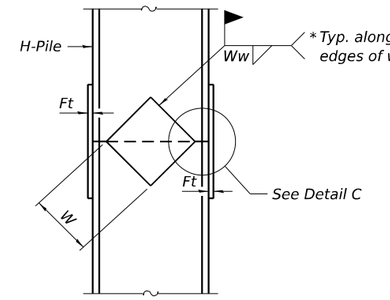

ELEVATION

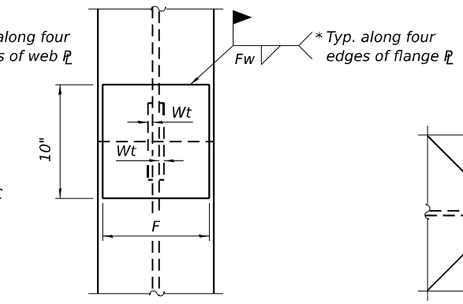

END VIEW

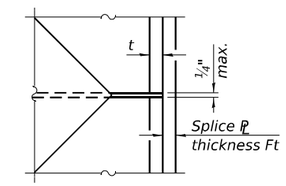

DETAIL C

Designation	F	Ft	Fw	W	Wt	Ww
HP 18x181	15½"	1½"	1"	9½"	⅞"	¾"
x157	15¼"	1¼"	1"	9½"	⅞"	¾"
x135	15¼"	1¼"	1"	9½"	⅞"	¾"
HP 16x183	13¾"	1½"	1"	8¼"	⅞"	¾"
x162	13½"	1½"	1"	8¼"	¾"	⅝"
x141	13½"	1¼"	⅞"	8¼"	¾"	⅝"
x121	13½"	1¼"	⅞"	8¼"	¾"	⅝"
HP 14x117	12½"	1¼"	⅞"	7¾"	⅝"	½"
x102	12½"	1"	¾"	7¾"	⅝"	½"
x89	12½"	⅞"	11/16"	7¾"	⅝"	½"
x73	12½"	¾"	9/16"	7¾"	⅝"	½"
HP 12x84	10"	1"	11/16"	6½"	⅝"	½"
x74	10"	⅞"	11/16"	6½"	⅝"	½"
x63	10"	¾"	½"	6½"	½"	⅜"
x53	10"	¾"	½"	6½"	½"	⅜"
HP 10x57	8"	⅞"	9/16"	5¼"	½"	⅜"
x42	8"	¾"	9/16"	5¼"	½"	⅜"
HP 8x36	6¾"	⅝"	7/16"	4"	½"	⅜"

WELDED PLATE FIELD SPLICE

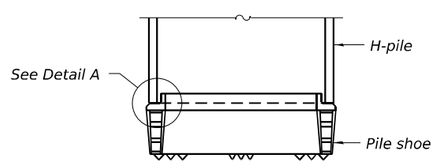

ELEVATION

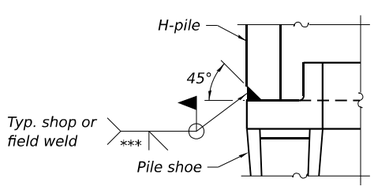

DETAIL A

SHOE ATTACHMENT

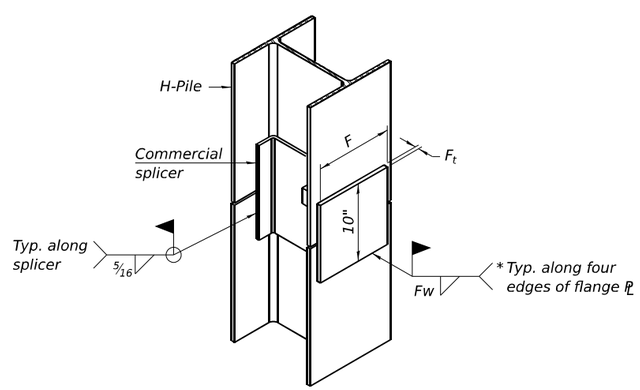

ISOMETRIC VIEW

WELDED COMMERCIAL SPLICE ALTERNATE

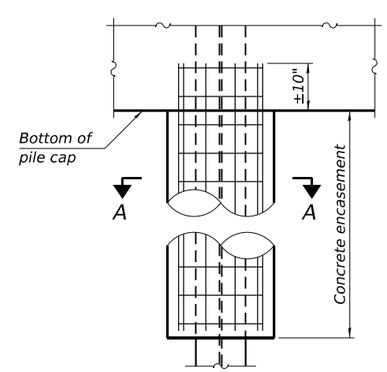

ELEVATION

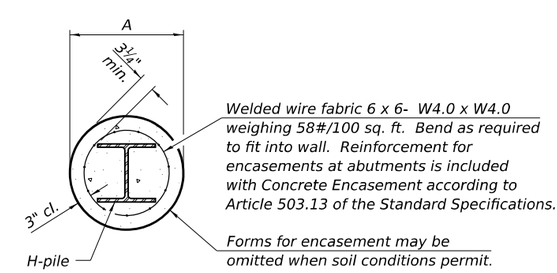

SECTION A-A

INDIVIDUAL PILE CONCRETE ENCASEMENT
(when specified)

Note:
The steel H-piles shall be according to AASHTO M270 Grade 50.

* Interrupt welds ¼" from end of web and/or each flange.

** Remove portions of backup PL's that extend outside the flanges.

*** Weld size per pile shoe manufacturer (5/16" min.).

F-HP 4-4-2025

MODEL: Default
FILE NAME: P:\2024\2401668 - US 51 over ICRR Bridge Replacement\4 CADD - DWG\4.4 Struc\0390084-78937-025-HP-Pile Details.dgn

TWM ENGINEERING GEOSPATIAL SERVICES
TWM, INC. WWW.TWM-INC.COM
IL DESIGN FIRM LICENSE NO: 184-001220

USER NAME = bpolter	DESIGNED - TCS	REVISED -	
	CHECKED - BWP	REVISED -	
PLOT SCALE = 0:2.000 ':" / in.	DRAWN - TCS	REVISED -	
PLOT DATE = 8/21/2025	CHECKED - BWP	REVISED -	

STATE OF ILLINOIS
DEPARTMENT OF TRANSPORTATION

HP PILE DETAILS
STRUCTURE NO. 039-0084
SHEET 25 OF 31 SHEETS

F.A.P. RTE.	SECTION	COUNTY	TOTAL SHEETS	SHEET NO.
322	3VB-3	JACKSON	124	93
		CONTRACT NO. 78937		
		ILLINOIS	FED. AID PROJECT	

8/21/2025 11:09:50 AM

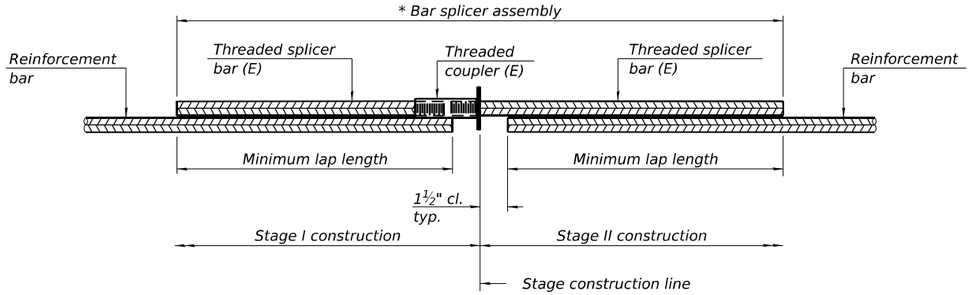

STANDARD BAR SPLICER ASSEMBLY PLAN

Only bar splicer assemblies as presented on the approved QPL list may be used.

Threaded splicer bar length = min. lap length + 1½" + thread length

* Epoxy not required on Bar Splicer Assembly components used in conjunction with black bars.

Location	Bar size	No. assemblies required	Minimum lap length
Deck Slab Top	#5	375	3'-1"
Deck Slab Bottom	#5	230	3'-6"
Diaphragm, Back Face	#6	8	4'-0"
Diaphragm, Front Face	#6	6	See Diaphragm Bar Splicer Detail
Approach Slabs, Top	#5	80	3'-4"
Approach Slabs, Bottom	#8	106	4'-9"
Approach Slab Footing	#5	80	3'-2"
Abutment Caps	#7	20	5'-0"
Pier Caps	#8	24	8'-2"
Pier Caps	#5	12	3'-7"

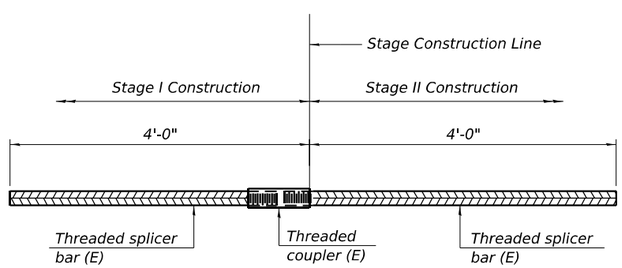

DIAPHRAGM BAR SPLICER DETAIL

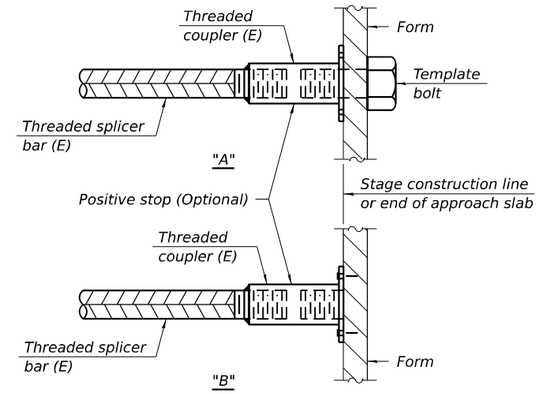

INSTALLATION AND SETTING METHODS

"A" : Set bar splicer assembly by means of a template bolt.
"B" : Set bar splicer assembly by nailing to wood forms or cementing to steel forms.
(E) : Indicates epoxy coating.

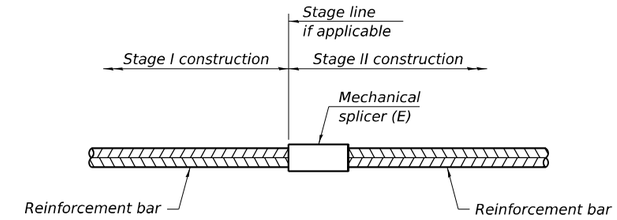

STANDARD MECHANICAL SPLICER

Location	Bar size	No. assemblies required
Pier Crashwall 1	#5	126
Pier Crashwall 2	#5	126
Pier 1 Column	#8	40
Pier 2 Column	#8	40

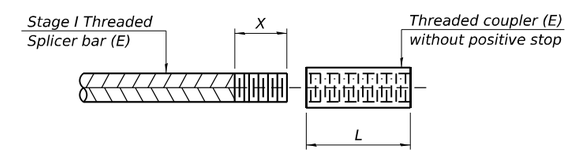

THREADING OF ASSEMBLIES

The threaded length "X" shall be no more than L/2. The bar should be tightened until 0-1 thread(s) is/are exposed.

Notes:
Splicer bars shall be deformed with threaded ends and have a minimum 60 ksi yield strength.
All reinforcement shall be lapped and tied to the splicer bars.
Bar splicer assemblies shall be epoxy coated according to the requirements for reinforcement bars. See Section 508 of the Standard Specifications.
See approved list of bar splicer assemblies and mechanical splicers for alternatives.

BSD-1 4-4-2025

Illinois Department of Transportation
Division of Highways
District 9

SOIL BORING LOG

Page 1 of 1

Date 5/3/21

ROUTE US 51 DESCRIPTION US 51 over ICRR LOGGED BY L. Estel

SECTION 3VB-2 (Ex.) LOCATION 3 mi. N of Desoto (near Ex. Pier #1), SEC. 5, TWP. 8S, RNG. 1W, PM

COUNTY Jackson DRILLING METHOD Hollow Stem Auger (8" O.D., 3.25" I.D.) HAMMER TYPE Auto SPT 140 lb (HE = 86.5%)

STRUCT. NO. 039-0052
Station 430+42.72

BORING NO. 1-S
Station 429+98
Offset 30.0ft Rt
Ground Surface Elev. 415.5 ft

Surface Water Elev. ft
Stream Bed Elev. ft

Groundwater Elev.:
First Encounter ft
Upon Completion ft
After Hrs. ft

Description	Elev.	DEPTH (ft)	BLOWS	UCS Qu (tsf)	MOIST (%)
Track Ballast Aggregate					
Stiff Brown and mottled dark Brown, Moist SILTY CLAY	411.00	-5	1 2 4	1.2 B	21
V. Stiff Brown, Moist SILTY CLAY	408.50		2 4 6	3.1 B	23
M. Stiff Brown, Moist SILTY CLAY	406.00	-10	1 3 4	0.8 B	22
Stiff Brown, Moist CLAY with rounded Pebbles	403.50		2 5 8	1.8 B	17
Hard Brown, Dry SANDSTONE	401.00	-15	100/4"		13
Borehole continued with rock coring.		-20			

Bottom of hole @ 25.5 ft

No free water encountered

To Convert "N" values to "N60", multiply by 1.44; Hammer Efficiency = 86.5%

Ground surface elevation referenced to BM 039-0052, Cut Square on NW Hub Guard SN 039-0052; EL. 441.75

The Unconfined Compressive Strength (UC3) Failure Mode is indicated by (B-Bulge, S-Shear, P-Penetrometer, E-Estimated)
Abbreviations W.O.H - Sampler Advanced By Weight of Hammer, W.O.P - Advanced by Weight of Pipe, B.S. - Before Seating
The SPT (N value) is the sum of the last two blow values in each sampling zone (AASHTO T206) BBS, from 137 (Rev. 8-99)

File Name:S:\MATERIALS GEOTECHNICAL UNIT\INTI\PROJECTS\PROJECTS FILE\JACKSON\STRUCTURES\039-0052 US 51 OVER ICRR GPJ Data Template 96TEMPLT.GDT Date Printed 1/12/22
Latitude = 37.51.08.95 Longitude = 89.13.54.37 Dataum=NAD83 Job Number

Illinois Department of Transportation
Division of Highways
District 9

ROCK CORE LOG

Page 1 of 1

Date 5/3/21

ROUTE US 51 DESCRIPTION US 51 over ICRR LOGGED BY L. Estel

SECTION 3VB-2 (Ex.) LOCATION 3 mi. N of Desoto (near Ex. Pier #1), SEC. 5, TWP. 8S, RNG. 1W, PM

COUNTY Jackson CORING METHOD Conventional rotary with polymer modified water

STRUCT. NO. 039-0052
Station 430+42.72

CORING BARREL TYPE & SIZE NV3 5FT NWJ
Core Diameter 2 in
Top of Rock Elev. 401.00 ft
Begin Core Elev. 400.00 ft

BORING NO. 1-S
Station 429+98
Offset 30.0ft Rt
Ground Surface Elev. 415.5 ft

Description	Elev.	DEPTH (ft)	CORE (#)	RECOVERY (%)	R.Q.D. (%)	CORE TIME (min/ft)	STRENGTH (tsf)
Hard Brown, Dry SANDSTONE (Field Hardness: Moderately Hard)		-20	1	85	38	5	126.2 111.5 53.6
Hard Brown, Dry SANDSTONE (Field Hardness: Moderately Hard)	394.25		2	77	61	5	
Hard Grey, Dry CLAY SHALE (Field Hardness: Low Hardness)	393.25						
Hard Brown, Dry SANDSTONE (Field Hardness: Moderately Hard)	390.00	-25					76 5.2
Bottom of hole @ 25.5 ft Ground surface elevation referenced to BM 039-0052, Cut Square on NW Hub Guard SN 039-0052; EL. 441.75		-30 -35					

Color pictures of the cores Yes, attached
Cores will be stored for examination until 5 years after construction
The "Strength" column represents the uniaxial compressive strength of the core sample (ASTM D-2938)
RQD is the ratio of the total length of sound core specimens >4" to total length of core run **BBS, form 138 (Rev. 8-99)**

ROCK CORE 039-0052 US 51 OVER ICRR.GPJ D6TEMPLT.GDT 1/12/22

MODEL: Default
FILE NAME: P:\2024\240166\B - US 51 over ICRR Bridge Replacement\4 CADD - DWG\4.4 Struct\0390084-78937-027-Soil Borings.dgn

TWM ENGINEERING GEOSPATIAL SERVICES
TWM, INC.
WWW.TWM-INC.COM
IL DESIGN FIRM LICENSE NO: 184-001220

USER NAME = bpolter	DESIGNED - TCS	REVISED -	
	CHECKED - BWP	REVISED -	
PLOT SCALE = 0:2.000 ':" / in.	DRAWN - TCS	REVISED -	
PLOT DATE = 8/21/2025	CHECKED - BWP	REVISED -	

STATE OF ILLINOIS
DEPARTMENT OF TRANSPORTATION

SOIL BORING LOGS
STRUCTURE NO. 039-0084

SHEET 27 OF 31 SHEETS

F.A.P. RTE.	SECTION	COUNTY	TOTAL SHEETS	SHEET NO.
322	3VB-3	JACKSON	124	95

CONTRACT NO. 78937
ILLINOIS FED. AID PROJECT

8/21/2025 11:09:51 AM

Illinois Department of Transportation
Division of Highways
District 9

SOIL BORING LOG

Page 1 of 2

Date 5/5/21

ROUTE US 51 **DESCRIPTION** US 51 over ICRR **LOGGED BY** L. Estel

SECTION 3VB-2 (Ex.) **LOCATION** 3 mi. N of Desoto (near Ex. E. Abut.), **SEC.** 5, **TWP.** 8S, **RNG.** 1W, **PM**

COUNTY Jackson **DRILLING METHOD** Hollow Stem Auger (8" O.D., 3.25" I.D.) **HAMMER TYPE** Auto SPT 140 lb (HE = 86.5%)

STRUCT. NO. 039-0052
Station 430+42.72

BORING NO. 2-S
Station 431+48
Offset 9.0ft Lt
Ground Surface Elev. 441.6 ft

Surface Water Elev. ft
Stream Bed Elev. ft

Groundwater Elev.:
▽ **First Encounter** ft
▽ **Upon Completion** ft
▼ **After** Hrs. ft

Description	Elev.	DEPTH (ft)	BLOWS	UCS Qu (tsf)	MOIST (%)
Cored Pavement, 19.75 in. HMA over 10 in. CONCRETE					
	439.10				
M. Stiff Tan/Brown, Moist SILTY CLAY					
		-5	1		
			2	0.9	22
			3	B	
	434.60				
Stiff Brown and mottled Red, Moist SILTY CLAY			1		
			4	1.8	25
			4	B	
		-10	1		
			2	1.8	25
			3	B	
	429.60				
V. Soft Grey, Moist SILTY CLAY			1		
			1	0.2	26
			2	B	
	427.10				
M. Stiff Grey, Moist SILTY CLAY		-15	WOH		
			1	0.7	26
			2	B	
	424.60				
Stiff Grey, Moist SILTY CLAY			1		
			2	1.2	22
			4	B	
	422.10				
		-20	1		
M. Stiff Grey with specks of Brown, Moist SILTY CLAY *(continued)*			1	0.8	27
			3	B	
	419.60				
Stiff Grey with specks of Brown, Moist SILTY CLAY			1		
			2	1.4	27
			3	B	
	417.10				
M. Stiff Brown, Moist SILTY CLAY		-25	1		
			2	0.7	26
			3	B	
	414.60				
Stiff Brown, Moist SILTY CLAY			1		
			3	1.2	22
			3	B	
	412.10				
M. Stiff Brown, Moist SILTY CLAY		-30	1		
			3	0.8	22
			4	B	
	409.60				
Stiff Brown, Moist SILTY CLAY			1		
			4	2.0	23
			4	B	
	407.10				
M. Stiff Brown, Moist SILTY CLAY		-35	2		
			4	0.7	22
			6	B	
	404.60				
M. Stiff Brown, Moist SILTY CLAY LOAM			2		
			10	1.0	15
			15	B	
	402.10				
		-40	100/8"		

The Unconfined Compressive Strength (UCS) Failure Mode is indicated by (B-Bulge, S-Shear, P-Penetrometer, E-Estimated)
Abbreviations W.O.H - Sampler Advanced By Weight of Hammer, W.O.P - Advanced by Weight of Pipe, B.S. - Before Seating
The SPT (N value) is the sum of the last two blow values in each sampling zone (AASHTO T206) BBS, from 137 (Rev. 8-99)

File Name S:\MATERIALS GEOTECHNICAL UNIT\GINT\PROJECTS\PROJECTS FILE\JACKSONS\STRUCTURES\039-0052 US51 OVER ICRR.3PJ Data Template DOTTEMPLT.GDT Date Printed 1/13/22
Latitude 37 51 09.51 Longitude -89 13 53.12 Datum NAD83 Job Number

Illinois Department of Transportation
Division of Highways
District 9

SOIL BORING LOG

Page 2 of 2

Date 5/5/21

ROUTE US 51 **DESCRIPTION** US 51 over ICRR **LOGGED BY** L. Estel

SECTION 3VB-2 (Ex.) **LOCATION** 3 mi. N of Desoto (near Ex. E. Abut.), **SEC.** 5, **TWP.** 8S, **RNG.** 1W, **PM**

COUNTY Jackson **DRILLING METHOD** Hollow Stem Auger (8" O.D., 3.25" I.D.) **HAMMER TYPE** Auto SPT 140 lb (HE = 86.5%)

STRUCT. NO. 039-0052
Station 430+42.72

BORING NO. 2-S
Station 431+48
Offset 9.0ft Lt
Ground Surface Elev. 441.6 ft

Surface Water Elev. ft
Stream Bed Elev. ft

Groundwater Elev.:
▽ **First Encounter** ft
▽ **Upon Completion** ft
▼ **After** Hrs. ft

Description	Elev.	DEPTH (ft)	BLOWS	UCS Qu (tsf)	MOIST (%)
Hard Reddish Brown, Moist Weathered SANDSTONE					13
	400.60				
No free water encountered					
To Convert "N" values to "N60", multiply by 1.44; Hammer Efficiency = 86.5%					
Ground surface elevation referenced to BM 039-0052, Cut Square on NW Hub Guard SN 039-0052; EL. 441.75. *(continued)*		-45			
Borehole continued with rock coring.		-50			
		-55			
		-60			

The Unconfined Compressive Strength (UCS) Failure Mode is indicated by (B-Bulge, S-Shear, P-Penetrometer, E-Estimated)
Abbreviations W.O.H - Sampler Advanced By Weight of Hammer, W.O.P - Advanced by Weight of Pipe, B.S. - Before Seating
The SPT (N value) is the sum of the last two blow values in each sampling zone (AASHTO T206) BBS, from 137 (Rev. 8-99)

File Name S:\MATERIALS GEOTECHNICAL UNIT\GINT\PROJECTS\PROJECTS FILE\JACKSONS\STRUCTURES\039-0052 US51 OVER ICRR.3PJ Data Template DOTTEMPLT.GDT Date Printed 1/13/22
Latitude 37 51 09.51 Longitude -89 13 53.12 Datum NAD83 Job Number

Illinois Department of Transportation
Division of Highways
District 9

ROCK CORE LOG

Page 1 of 1

Date 5/5/21

ROUTE US 51 **DESCRIPTION** US 51 over ICRR **LOGGED BY** L. Estel

SECTION 3VB-2 (Ex.) **LOCATION** 3 mi. N of Desoto (near Ex. E. Abut.), **SEC.** 5, **TWP.** 8S, **RNG.** 1W, **PM**

COUNTY Jackson **CORING METHOD** Conventional rotary with polymer modified water

STRUCT. NO. 039-0052
Station 430+42.72

CORING BARREL TYPE & SIZE NV3 5FT NWJ
Core Diameter 2 in
Top of Rock Elev. 402.10 ft
Begin Core Elev. 400.60 ft

BORING NO. 2-S
Station 431+48
Offset 9.0ft Lt
Ground Surface Elev. 441.6 ft

Description	Elev.	DEPTH (ft)	CORE (#)	RECOVERY (%)	R.Q.D. (%)	CORE TIME (min/ft)	STRENGTH (tsf)
Hard Reddish Brown, Dry SANDSTONE with CLAY SHALE	400.60		1	0	0	10	
Coring malfunction lead to poor recovery. See Borings 1-S & 3-S for additional foundation information.		-45					
			2	28	0	10	38.8
		-50					
			3	0	0	10	
		-55					
	386.60						
Bottom of hole @ 56.0 ft							
No free water encountered							
To Convert "N" values to "N60", multiply by 1.44; Hammer Efficiency = 86.5%							
Ground surface elevation referenced to BM 039-0052, Cut Square on NW Hub Guard SN 030 0052; EL. 441.75		-60					

Color pictures of the cores Yes, attached
Cores will be stored for examination until 5 years after construction
The "Strength" column represents the uniaxial compressive strength of the core sample (ASTM D-2938)
RQD is the ratio of the total length of sound core specimens >4" to total length of core run **BBS, form 138 (Rev. 8-99)**

ROCK CORE 039-0052 US 51 OVER ICRR.GPJ DOTEMPLT.GDT /1/3/22

MODEL: Default
FILE NAME: P:\2024\240166B - US 51 over ICRR Bridge Replacement\4 CADD - DWG\4.4 Struc\0390084-78937-026-Soil Borings.dgn

TWM ENGINEERING GEOSPATIAL SERVICES
TWM, INC.
WWW.TWM-INC.COM
IL DESIGN FIRM LICENSE NO: 184-001220

USER NAME = bpolter	DESIGNED - TCS	REVISED -	
	CHECKED - BWP	REVISED -	
PLOT SCALE = 0:2.000 ':" / in.	DRAWN - TCS	REVISED -	
PLOT DATE = 8/21/2025	CHECKED - BWP	REVISED -	

STATE OF ILLINOIS
DEPARTMENT OF TRANSPORTATION

SOIL BORING LOGS
STRUCTURE NO. 039-0084

SHEET 28 OF 31 SHEETS

F.A.P. RTE.	SECTION	COUNTY	TOTAL SHEETS	SHEET NO.
322	3VB-3	JACKSON	124	96

CONTRACT NO. 78937
ILLINOIS FED. AID PROJECT

8/21/2025 11:09:52 AM

Illinois Department of Transportation
Division of Highways
District 9

SOIL BORING LOG

Page 1 of 2

Date 5/7/21

ROUTE US 51 DESCRIPTION US 51 over ICRR LOGGED BY L. Estel

SECTION 3VB-2 (Ex.) LOCATION 3 mi. N of Desoto (near Ex. W. Abut.), SEC. 5, TWP. 8S, RNG. 1W, PM

COUNTY Jackson DRILLING METHOD Hollow Stem Auger (8" O.D., 3.25" I.D.) HAMMER TYPE Auto SPT 140 lb (HE = 86.5%)

STRUCT. NO. 039-0052
Station 430+42.72

BORING NO. 3-S
Station 429+30
Offset 10.0ft Lt
Ground Surface Elev. 441.5 ft

Surface Water Elev. ft
Stream Bed Elev. ft

Groundwater Elev.:
▽ First Encounter 398.0 ft
▽ Upon Completion ft
▼ After Hrs. ft

Description	Elev.	DEPTH (ft)	BLOWS	UCS Qu (tsf)	MOIST (%)
Cored Pavement, 19" HMA over 10.5" CONCRETE	439.00				
V. Stiff Brown, Moist SILTY CLAY	434.50	-5	1 2 3	2.9 B	22
Stiff Brown and Grey, Moist SILTY CLAY	432.00		1 1 3	1.2 B	23
V. Stiff Brown and Grey with specks of Red, Moist SILTY CLAY	429.50	-10	1 1 3	2.4 B	21
Stiff Brown with specks of Red, Moist CLAY			1 1 3	1.2 B	25
(Brown and Grey with specks of Red)	422.00	-15	1 1 2	1.1 B	29
(Brown with specks of Red)		-20	WOH 2 3	1.8 B	25
Stiff Grey with streaks of Black, Moist SILTY CLAY *(continued)*	419.50		2 3	1.1 B	28
M. Stiff Grey, Moist with V. Moist SILTY CLAY	417.00		1 2 3	0.5 B	27 & 37
Stiff Grey with specks of Brown, Moist SILTY CLAY		-25	1 2 3	1.4 B	29
(Brown)		-30	1 2 3	1.1 B	27
(Brown and Grey with specks of Black)		-35	1 4 5	1.2 B	21
(Brown with streaks of Black)		-40	1 2 3	1.2 B	20
			1 3 4	1.2 B	24
			1 3 5	1.8 B	22

The Unconfined Compressive Strength (UCS) Failure Mode is indicated by (B-Bulge, S-Shear, P-Penetrometer, E-Estimated)
Abbreviations W.O.H - Sampler Advanced By Weight of Hammer, W.O.P - Advanced by Weight of Pipe, B.S. - Before Seating
The SPT (N value) is the sum of the last two blow values in each sampling zone (AASHTO T206) BBS, from 137 (Rev. 8-99)

File Name S:\MATERIALS GEOTECHNICAL LN\TIGINT\PROJECTS\PROJECTS FILE\UCKSON\STRUCTURES\039-0052 US 51 OVER ICRR 3PJ Data Template DMTEMPLT.GDT Date Printed 1/13/22
Latitude 37 51 08.43 Longitude -89 13 55.07 Datum NAD83 Job Number

Illinois Department of Transportation
Division of Highways
District 9

SOIL BORING LOG

Page 2 of 2

Date 5/7/21

ROUTE US 51 DESCRIPTION US 51 over ICRR LOGGED BY L. Estel

SECTION 3VB-2 (Ex.) LOCATION 3 mi. N of Desoto (near Ex. W. Abut.), SEC. 5, TWP. 8S, RNG. 1W, PM

COUNTY Jackson DRILLING METHOD Hollow Stem Auger (8" O.D., 3.25" I.D.) HAMMER TYPE Auto SPT 140 lb (HE = 86.5%)

STRUCT. NO. 039-0052
Station 430+42.72

BORING NO. 3-S
Station 429+30
Offset 10.0ft Lt
Ground Surface Elev. 441.5 ft

Surface Water Elev. ft
Stream Bed Elev. ft

Groundwater Elev.:
▽ First Encounter 398.0 ft
▽ Upon Completion ft
▼ After Hrs. ft

Description	Elev.	DEPTH (ft)	BLOWS	UCS Qu (tsf)	MOIST (%)
(Brown with streaks of Black) *(continued)*	400.50		2 2	1.3 B	18
Hard Brownish Red, Dry Weathered SANDSTONE	398.00 ▽	-45			
Bottom of hole @ 53.5 ft		-50			
To Convert "N" values to "N60" multiply by 1.44; Hammer Efficiency = 86.5%		-55			
Ground surface elevation referenced to BM 039-0052, Cut Square on NW Hub Guard SN 039-0052; EL. 441.75.		-60			
Borehole continued with rock coring.					

The Unconfined Compressive Strength (UCS) Failure Mode is indicated by (B-Bulge, S-Shear, P-Penetrometer, E-Estimated)
Abbreviations W.O.H - Sampler Advanced By Weight of Hammer, W.O.P - Advanced by Weight of Pipe, B.S. - Before Seating
The SPT (N value) is the sum of the last two blow values in each sampling zone (AASHTO T206) BBS, from 137 (Rev. 8-99)

File Name S:\MATERIALS GEOTECHNICAL LN\TIGINT\PROJECTS\PROJECTS FILE\UCKSON\STRUCTURES\039-0052 US 51 OVER ICRR 3PJ Data Template DMTEMPLT.GDT Date Printed 1/13/22
Latitude 37 51 08.43 Longitude -89 13 55.07 Datum NAD83 Job Number

Illinois Department of Transportation
Division of Highways
District 9

ROCK CORE LOG

Page 1 of 1

Date 5/7/21

ROUTE US 51 DESCRIPTION US 51 over ICRR LOGGED BY L. Estel

SECTION 3VB-2 (Ex.) LOCATION 3 mi. N of Desoto (near Ex. W. Abut.), SEC. 5, TWP. 8S, RNG. 1W, PM

COUNTY Jackson CORING METHOD Conventional rotary with polymer modified water

STRUCT. NO. 039-0052
Station 430+42.72

CORING BARREL TYPE & SIZE NV3 5FT NWJ
Core Diameter 2 in
Top of Rock Elev. 400.50 ft
Begin Core Elev. 398.00 ft

BORING NO. 3-S
Station 429+30
Offset 10.0ft Lt
Ground Surface Elev. 441.5 ft

Description	Elev.	DEPTH (ft)	CORE (#)	RECOVERY (%)	R.Q.D. (%)	CORE TIME (min/ft)	STRENGTH (tsf)
Hard Brownish Red, Dry SANDSTONE (Field Hardness: Moderately Hard)	398.00		1	76	23	10	
		-45					86.7
Hard Grey, Dry CLAY SHALE (Field Hardness: Low)	394.00						131.8
Hard Brown, Dry SANDSTONE (Field Hardness: Low)	392.25		2	100	0	10	
Hard Black, Dry COAL	391.50	-50					
Hard Grey, Dry CLAY SHALE (Field Hardness: Low)	390.00						
	388.00						
		-55					
Bottom of hole @ 53.5 ft Ground surface elevation referenced to BM 039-0052, Cut Square on NW Hub Guard SN 039-0052; EL. 441.75.		-60					

Color pictures of the cores Yes, attached
Cores will be stored for examination until 5 years after construction
The "Strength" column represents the uniaxial compressive strength of the core sample (ASTM D-2938)
RQD is the ratio of the total length of sound core specimens >4" to total length of core run

BBS, form 138 (Rev. 8-99)

ROCK CORE 039-0052 US 51 OVER ICRR.GPJ DMTEMPLT.GDT 1/13/22

MODEL: Default
FILE NAME: P:\2024\240166\B - US 51 over ICRR Bridge Replacement\4 CADD - DWG\4_4 Struct\0390084-78937-029-Soil Borings.dgn

TWM ENGINEERING & GEOSPATIAL SERVICES
TWM, INC.
WWW.TWM-INC.COM
IL DESIGN FIRM LICENSE NO: 184-001220

USER NAME = bpolter	DESIGNED - TCS	REVISED -	
	CHECKED - BWP	REVISED -	
PLOT SCALE = 0:2.000 ':" / in.	DRAWN - TCS	REVISED -	
PLOT DATE = 8/21/2025	CHECKED - BWP	REVISED -	

8/21/2025 11:09:53 AM

STATE OF ILLINOIS
DEPARTMENT OF TRANSPORTATION

SOIL BORING LOGS
STRUCTURE NO. 039-0084

SHEET 29 OF 31 SHEETS

F.A.P. RTE.	SECTION	COUNTY	TOTAL SHEETS	SHEET NO.
322	3VB-3	JACKSON	124	97

CONTRACT NO. 78937

ILLINOIS FED. AID PROJECT

Illinois Department of Transportation
Division of Highways
Terracon

SOIL BORING LOG

Page 1 of 2

Date 1/9/25

ROUTE US 51 DESCRIPTION Structure Over ICRR LOGGED BY KEG

SECTION 3VB-3 LOCATION 3 mi N of Desoto, Lat. 37.8525 Long. -89.2318, SEC. 5, TWP. 8S, RNG. 1W

COUNTY Jackson DRILLING METHOD SSA + NQ2 Rock Coring @ 16ft HAMMER TYPE

STRUCT. NO. 039-0052
Station 430+42.72

BORING NO. B-4S
Station 430+20
Offset 20.0 ft LT
Ground Surface Elev. 415.30 ft

Surface Water Elev. ft
Stream Bed Elev. ft

Groundwater Elev.:
First Encounter ft
Upon Completion ft
After Hrs. ft

Description	Elev.	DEPTH (ft)	BLOWS (/6")	UCS Qu (tsf)	MOIST (%)
TOPSOIL, approximately 3 inches	415.05				
Track Ballast Aggregate	411.30				
Brown SILTY CLAY trace sand		-5			
		-10			
Brown SILTY CLAY with gravel	403.30				
		-15			
Brown, SANDSTONE, Fine Grained (Field Hardness: Moderately Hard)	399.30				
Borehole continued with rock coring					
Bottom of hole @ 36 feet					
No free water encountered		-20			

DEPTH (ft)	BLOWS (/6")	UCS Qu (tsf)	MOIST (%)
-25			
-30			
-35			
-40			

Elevation referenced to BM 039-0052, EL. 441.75

End of Boring

The Unconfined Compressive Strength (UCS) Failure Mode is indicated by (B-Bulge, S-Shear, P-Penetrometer)
The SPT (N value) is the sum of the last two blow values in each sampling zone (AASHTO T206)

BBS, form 137 (Rev. 8-99)

SOIL BORING: 1524541 US 51 OVER CNRR.GPJ IL_DOT.GDT 2/21/25

Illinois Department of Transportation
Division of Highways
District 9

ROCK CORE LOG

Page 2 of 2

Date 1/9/25

ROUTE US 51 DESCRIPTION Structure over ICRR LOGGED BY KEG

SECTION 3VB-3 LOCATION 3 mi N of Desoto, Lat. 37.8525 Long. -89.2318, SEC. 5, TWP. 8S, RNG. 1W, PM

COUNTY Jackson CORING METHOD NQ2 Rock Coring

STRUCT. NO. 039-0052
Station 430+42.72

BORING NO. B-4S
Station 430+20
Offset 28.0ft LT
Ground Surface Elev. 415.3 ft

CORING BARREL TYPE & SIZE

Core Diameter 2 in
Top of Rock Elev. 399.30 ft
Begin Core Elev. 399.30 ft

Description	Elev.	DEPTH (ft)	CORE (#)	RECOVERY (%)	R.Q.D. (%)	CORE TIME (min/ft)	STRENGTH (tsf)
Brown, SANDSTONE, Fine Grained (Field Hardness: Moderately Hard)	396.30		R-1	83	42		100.4
M. Stiff, Tan Clay	395.70						
Gray, CLAY SHALE (Field Hardness: Low Hardness)		-20					
			R-2	100	0		
Red Brown, SANDSTONE, Fine Grained (Field Hardness: Moderately Hard)	392.80		R-3	100	27		
		-25					
Black, COAL	389.80						96.8
Gray, SHALE (Field Hardness: Low Hardness)	389.30		R-4	100	0		
			R-5	92	33		
		-30					
			R-6	100	0		
Bottom of hole @ 36 feet		-35					
Elevation referenced to BM 039-0052, EL. 441.75							
End of Boring	379.30						

Color pictures of the cores Yes
Cores will be stored for examination until 5 years
The "Strength" column represents the uniaxial compressive strength of the core sample (ASTM D-2938)
RQD is the ratio of the total length of sound core specimens >4" to total length of core run

BBS, form 138 (Rev. 8-99)

ROCK CORE : 1524541 US 51 OVER CNRR - ROCK CORE.GPJ 06TEMPLT.GDT 4/21/25

MODEL: Default
FILE NAME: P:\2024\2401661B - US 51 over ICRR Bridge Replacement\4 CADD - DWG\4.4 Struc\039008\4-78937-030-Soil Borings.dgn

TWM ENGINEERING GEOSPATIAL SERVICES
TWM, INC.
WWW.TWM-INC.COM
IL DESIGN FIRM LICENSE NO: 184-001220

USER NAME = bpolter	DESIGNED - TCS	REVISED -	
	CHECKED - BWP	REVISED -	
PLOT SCALE = 0:2.000 ':' / in.	DRAWN - TCS	REVISED -	
PLOT DATE = 8/21/2025	CHECKED - BWP	REVISED -	

STATE OF ILLINOIS
DEPARTMENT OF TRANSPORTATION

SOIL BORING LOGS
STRUCTURE NO. 039-0084

SHEET 30 OF 31 SHEETS

F.A.P. RTE.	SECTION	COUNTY	TOTAL SHEETS	SHEET NO.
322	3VB-3	JACKSON	124	98

CONTRACT NO. 78937

ILLINOIS FED. AID PROJECT

8/21/2025 11:09:54 AM

Illinois Department of Transportation
Division of Highways
Terracon

SOIL BORING LOG

Page 1 of 2

Date 1/9/25

ROUTE US 51 DESCRIPTION Structure over ICRR LOGGED BY KEG

SECTION 3VB-3 LOCATION 3 mi N of Desoto, Lat. 37.8524 Long. -89.2315, SEC. 5, TWP. 8S, RNG. 1W

COUNTY Jackson DRILLING METHOD SSA + NQ2 Rock Coring @ 36ft HAMMER TYPE

STRUCT. NO. 039-0052
Station 430+42.72

BORING NO. B-5S
Station 430+76
Offset 51.0 ft RT
Ground Surface Elev. 423.90 ft

Surface Water Elev. ft
Stream Bed Elev. ft

Groundwater Elev.:
First Encounter ft
Upon Completion ft
After Hrs. ft

Description	Elev.	DEPTH (ft)	BLOWS (/6")	UCS Qu (tsf)	MOIST (%)
TOPSOIL, approximately 3 inches	423.65				
Brown SILTY CLAY trace sand					
		-5			
		-10			
		-15			
		-20			
Brown SILTY CLAY trace sand *(continued)*					
	398.90	-25			
Brown SILTY CLAY with gravel					
		-30			
		-35			
	387.00				
Gray, SHALE (Field Hardness: Medium Hardness)					
Borehole continued with rock coring					
Bottom of hole @ 36 feet					
No free water encountered					
Elevation referenced to BM 039-0052, EL. 441.75		-40			

The Unconfined Compressive Strength (UCS) Failure Mode is indicated by (B-Bulge, S-Shear, P-Penetrometer)
The SPT (N value) is the sum of the last two blow values in each sampling zone (AASHTO T206)

BBS, form 137 (Rev. 8-99)

SOIL BORING 1524594 US 51 OVER CNRR.GPJ IL_DOT.GDT 2/21/25

Illinois Department of Transportation
Division of Highways
District 9

ROCK CORE LOG

Page 2 of 2

Date 1/9/25

ROUTE US 51 DESCRIPTION Structure over ICRR LOGGED BY KEG

SECTION 3VB-3 LOCATION 3 mi N of Desoto, Lat. 37.8524 Long. -89.2315, SEC. 5, TWP. 8S, RNG. 1W, PM

COUNTY Jackson CORING METHOD NQ2 Rock Coring

STRUCT. NO. 039-0052
Station 430+42.72

CORING BARREL TYPE & SIZE

Core Diameter 2 in
Top of Rock Elev. 387.90 ft
Begin Core Elev. 387.90 ft

BORING NO. B-5S
Station 430+76
Offset 51.0ft RT
Ground Surface Elev. 423.9 ft

Description	Elev.	DEPTH (ft)	CORE (#)	RECOVERY (%)	R.Q.D. (%)	CORE TIME (min/ft)	STRENGTH (tsf)
Gray, SHALE (Field Hardness: Medium Hardness)			R-1	39	28		
		-40	R-2	96	63		
		-45	R-3	100	83		190.1
	377.90						
Gray, LIMESTONE (Field Hardness: Hard)			R-4	100	50		
		-50	R-5	98	95		935
Bottom of hole @ 36 feet		-55					
Elevation referenced to BM 039-0052, EL. 441.75							
End of Boring	367.90						727.1

Color pictures of the cores Yes
Cores will be stored for examination until 5 years
The "Strength" column represents the uniaxial compressive strength of the core sample (ASTM D-2938)
RQD is the ratio of the total length of sound core specimens >4" to total length of core run

BBS, form 138 (Rev. 8-99)

ROCK CORE 1524594 US 51 OVER CNRR - ROCK CORE.GPJ IDOT.TEMPLT.GDT 4/21/25

MODEL: Default
FILE NAME: P:\2024\240166B - US 51 over ICRR Bridge Replacement\4 CADD - DWG\4.4 Struc\0390084-78937-031-Soil Borings.dgn

TWM ENGINEERING GEOSPATIAL SERVICES
TWM, INC.
WWW.TWM-INC.COM
IL DESIGN FIRM LICENSE NO: 184-001220

USER NAME = bpolter	DESIGNED - TCS	REVISED -	
	CHECKED - BWP	REVISED -	
PLOT SCALE = 0:2.000 ':' / in.	DRAWN - TCS	REVISED -	
PLOT DATE = 8/21/2025	CHECKED - BWP	REVISED -	

STATE OF ILLINOIS
DEPARTMENT OF TRANSPORTATION

SOIL BORING LOGS
STRUCTURE NO. 039-0084

SHEET 31 OF 31 SHEETS

F.A.P. RTE.	SECTION	COUNTY	TOTAL SHEETS	SHEET NO.
322	3VB-3	JACKSON	124	99
		CONTRACT NO. 78937		
		ILLINOIS	FED. AID PROJECT	

8/21/2025 11:09:55 AM

SEEDING & MULCHING

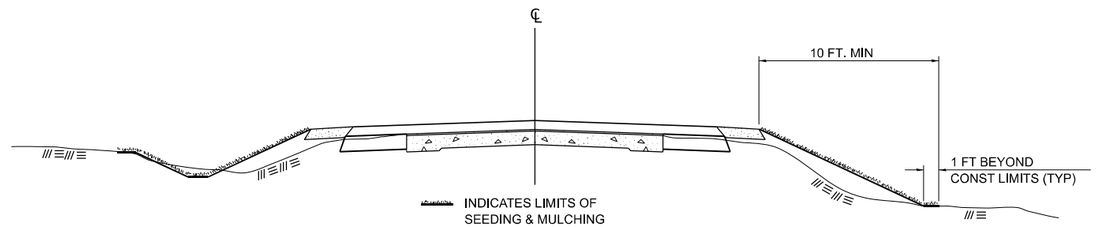

GENERAL NOTES

IN GENERAL, ALL EARTH SURFACES DISTURBED DURING CONSTRUCTION OPERATIONS SHALL BE SEEDED AND MULCHED UPON COMPLETION OF ALL GRADING OPERATIONS.

ON DETOUR ROADS, SLOPES SHALL BE SEEDED IMMEDIATELY UPON COMPLETION OF ANY GIVEN STAGE GRADING. TEMPORARY SEEDING SHALL BE CLASS 7.

FERTILIZER NUTRIENTS SHALL BE APPLIED TO ALL SEEDED AREAS. LIMESTONE SHALL BE APPLIED TO ALL AREAS OF FINAL SEEDING.

THE RATES OF APPLICATION OF FERTILIZER, MULCH AND LIMESTONE SHALL BE AS SPECIFIED IN THE SPECIAL PROVISIONS FOR ROAD AND BRIDGE CONSTRUCTION.

SECTIONS 250 AND 251 SHALL GOVERN THIS WORK EXCEPT AS SPECIFIED HEREIN OR AS NOTED IN THE SPECIAL PROVISIONS.

DRAWN	02-15-89
REVISED	03-27-08
REVISED	10-21-21
REVISED	05-27-22

STD. 9-19

TYPICAL CROSS SECTION SHOWING STEP CONSTRUCTION ON EXISTING FILL

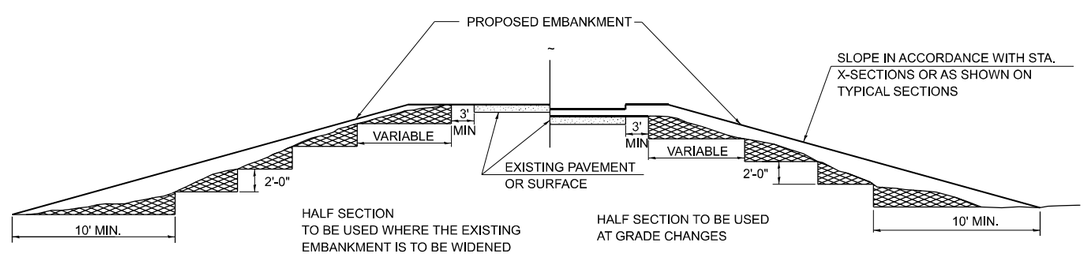

STEPS SHALL BE CUT IN THE EXISTING SLOPE IN ACCORDANCE WITH ART. 205.03 EXCEPT THAT THE REQUIREMENT THAT STEPS SHALL BE CUT INTO THE EXISTING SLOPE BEFORE THE CONTRUCTION OF THE EXISTING EMBANKMENT IS STARTED SHALL NOT APPLY. MATERIAL TO BE REMOVED AND REPLACED IN THE EMBANKMENT IN ACCORDANCE WITH ART. 205.04. COST TO BE INCLUDED IN THE VARIOUS ITEMS OF EXCAVATION AND NO ADDITIONAL COMPENSATION WILL BE ALLOWED BECAUSE OF THIS WORK.

DRAWN	02-15-89
REVISED	05-07-08
REVISED	10-21-21
REVISED	05-27-22

STD. 9-25

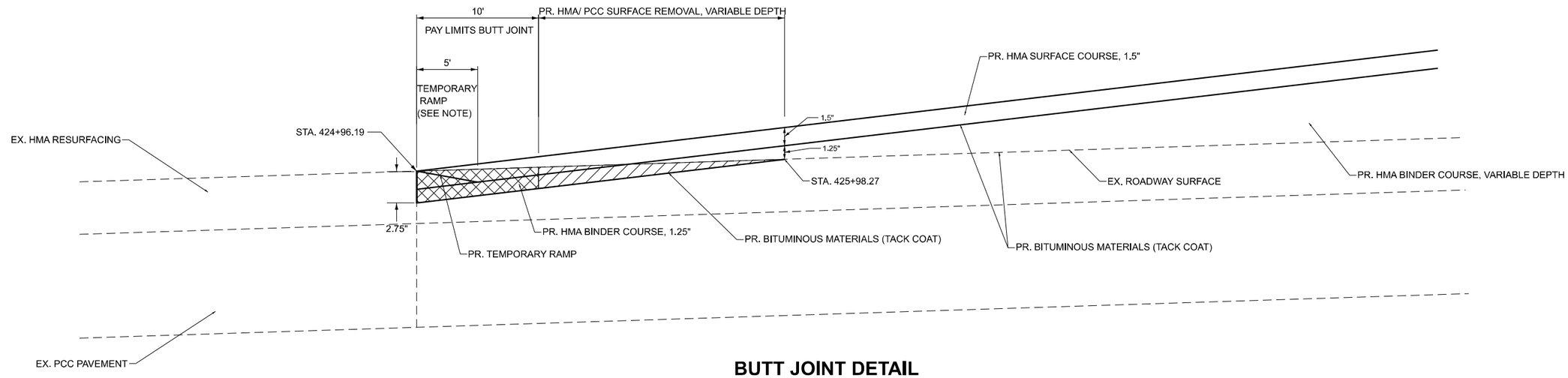

BUTT JOINT DETAIL

(NOT TO SCALE)

STA. 424+96.19

LEGEND

PR. HMA SURFACE REMOVAL, VARIABLE DEPTH

PR. HAM SURFACE REMOVAL - BUTT JOINT

NOTES

1. TEMPORARY RAMP TO BE CONSTRUCTED AFTER STAGE 1 AND STAGE 2.

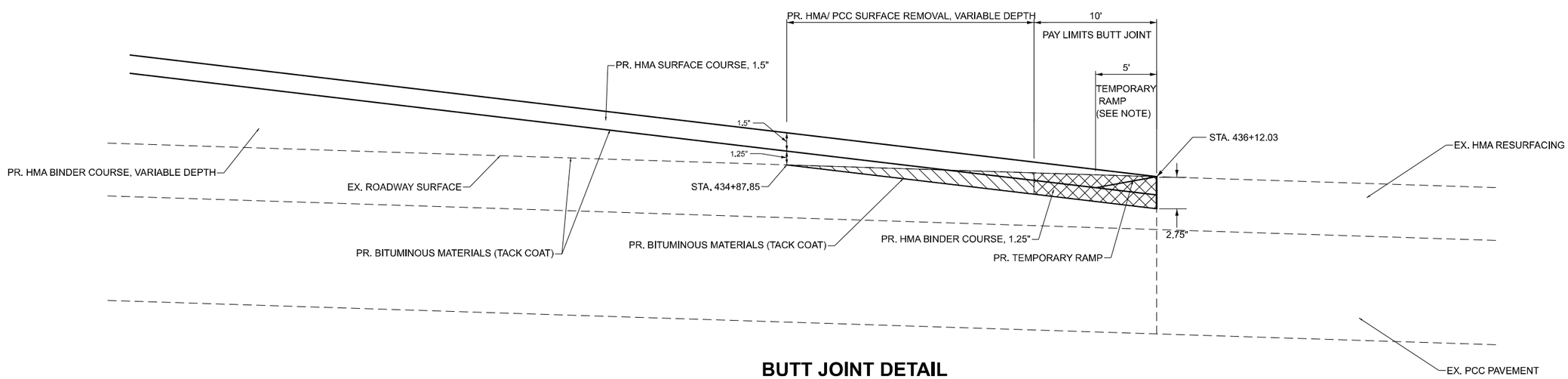

BUTT JOINT DETAIL

(NOT TO SCALE)

STA. 436+12.03

MODEL: Default
FILE NAME: P:\2022\220197A - US 51 over ICRR Bridge Replacement (Phase 1)\4 CADD - DWG\4.7 Train\CAD Sheets\0978937-sht-dtl-Butt Joint Detail.dgn

TWM ENGINEERING GEOSPATIAL SERVICES	TWM, INC. WWW.TWM-INC.COM IL DESIGN FIRM LICENSE NO: 184-001220	USER NAME = bbillhartz	DESIGNED - TBP	REVISED -	STATE OF ILLINOIS DEPARTMENT OF TRANSPORTATION	BUTT JOINT DETAILS US 51	F.A.P. RTE.	SECTION	COUNTY	TOTAL SHEETS	SHEET NO.
			DRAWN - BAB	REVISED -			322	3VB-3	JACKSON	124	101
		PLOT SCALE = 5.000 ' / in.	CHECKED - SJK	REVISED -					CONTRACT NO. 78937		
		PLOT DATE = 8/21/2025	DATE - 5/2025	REVISED -		SCALE: N.T.S. SHEET 1 OF 1 SHEETS STA. TO STA.		ILLINOIS	FED. AID PROJECT		

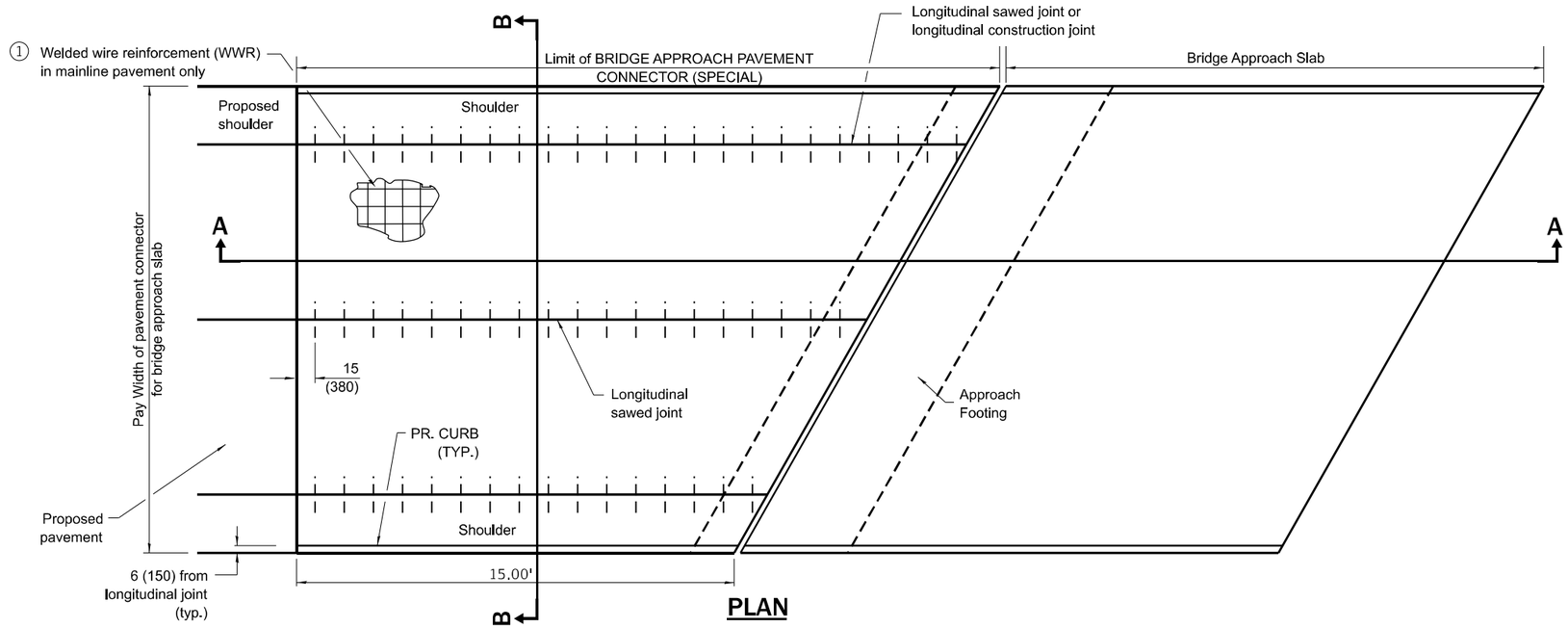

PLAN

GENERAL NOTES

See Standard 420001 for pavement joint details not shown.

See plans for details of bridge approach slab, approach footing and joint treatment.

All dimensions are in inches (millimeters) unless otherwise shown.

SUPERELEVATION CHART

STA. 431+44.04 BEGIN TANGENT RUNOUT	1.5%	1.5%
STA. 431+84.00 END TANGENT RUNOUT	1.5%	0%
STA. 433+16.94 BEGIN FULL S.E.	5%	5%

HORIZONTAL CURVE
PI STA. 450+09.28

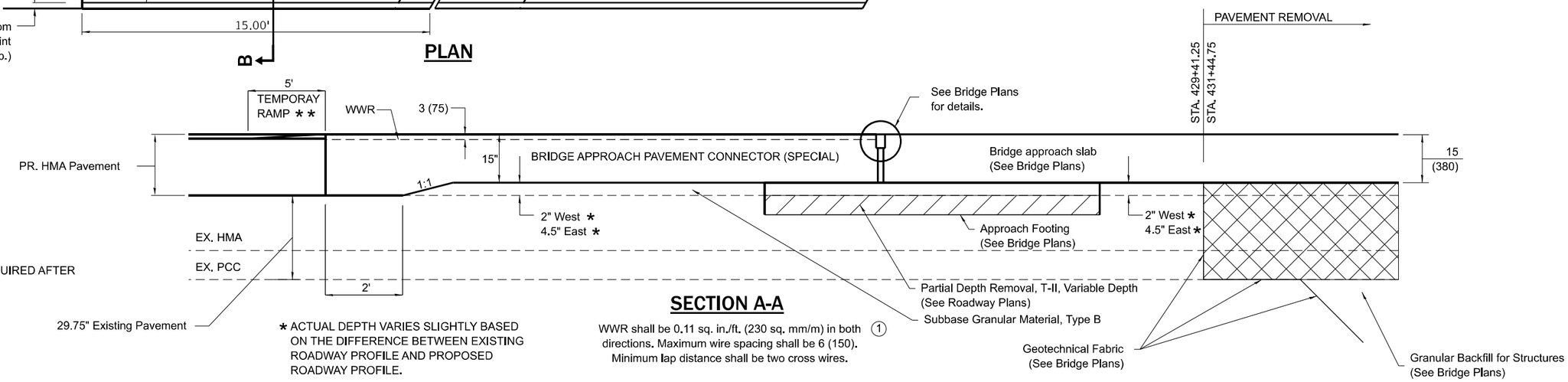

** TEMPORARY RAMP REQUIRED AFTER STAGES 1 AND 2.

* ACTUAL DEPTH VARIES SLIGHTLY BASED ON THE DIFFERENCE BETWEEN EXISTING ROADWAY PROFILE AND PROPOSED ROADWAY PROFILE.

SECTION A-A

WWR shall be 0.11 sq. in./ft. (230 sq. mm/m) in both directions. Maximum wire spacing shall be 6 (150). Minimum lap distance shall be two cross wires. ①

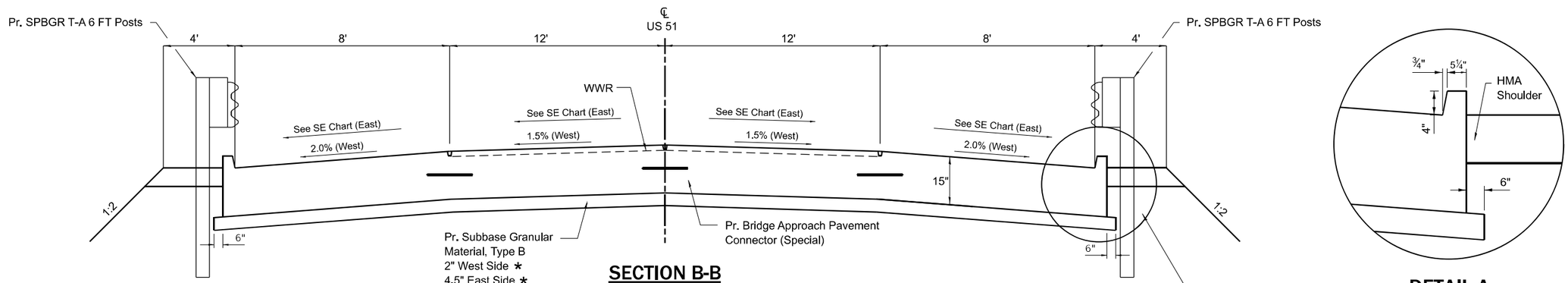

SECTION B-B

WWR shall be 0.11 sq. in./ft. (230 sq. mm/m) in both directions. Maximum wire spacing shall be 6 (150). Minimum lap distance shall be two cross wires. ①

DETAIL A

(Typical Both Sides)

MODEL: Default
FILE NAME: P:\2022\22019\A - US 51 over ICRR Bridge Replacement (Phase II)\4 CADD - DWG\4.7 Tsn\CAD Sheets\D2978937-sht-pl-Bridge Approach Pavement Connector (Special).dgn

TWM ENGINEERING GEOSPATIAL SERVICES — TWM, INC. WWW.TWM-INC.COM — IL DESIGN FIRM LICENSE NO: 184-001220	USER NAME = bbillhartz	DESIGNED - TBP	REVISED -	STATE OF ILLINOIS DEPARTMENT OF TRANSPORTATION
		DRAWN - BAB	REVISED -	
	PLOT SCALE = 40.000 ' / in.	CHECKED - SJK	REVISED -	
	PLOT DATE = 8/21/2025	DATE - 5/2025	REVISED -	

BRIDGE APPROACH PAVEMENT CONNECTOR (SPECIAL)
US 51

SCALE: N.T.S. | SHEET 1 OF 1 SHEETS | STA. TO STA.

F.A.P. RTE.	SECTION	COUNTY	TOTAL SHEETS	SHEET NO.
322	3VB-3	JACKSON	124	102
		CONTRACT NO. 78937		
		ILLINOIS	FED. AID PROJECT	

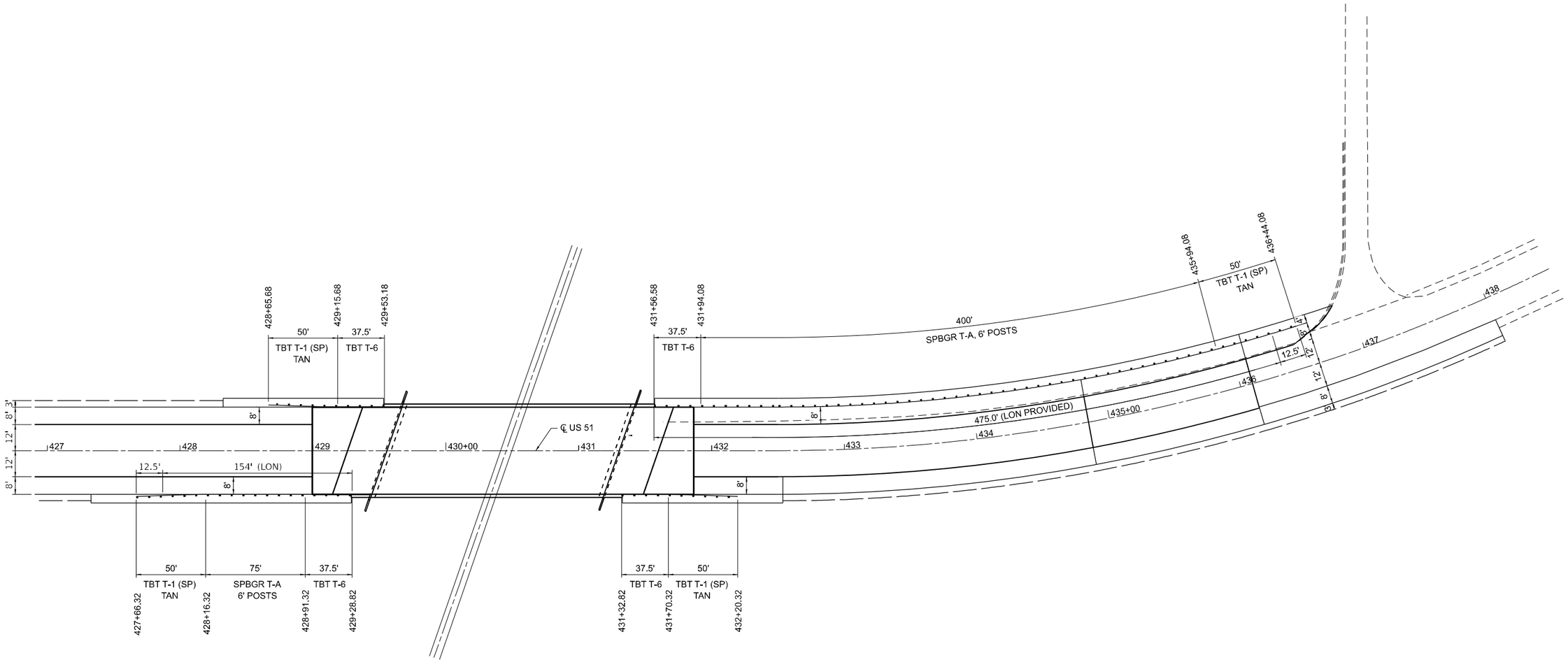

GUARDRAIL LENGTH OF NEED (LON) DETAILS
US 51 OVER CN IC RR

N

N.T.S.

MODEL: Default
FILE NAME: P:\2022\22197A - US 51 over ICRR Bridge Replacement (Phase 1)\4 CADD - DWG\4.7 Trans\CAD Sheets\0978937-sht-rtl-Guardrail LON.dgn

TWM ENGINEERING GEOSPATIAL SERVICES	TWM, INC. WWW.TWM-INC.COM IL DESIGN FIRM LICENSE NO: 184-001220	USER NAME = bbillhartz	DESIGNED - TBP	REVISED -	STATE OF ILLINOIS DEPARTMENT OF TRANSPORTATION	GUARDRAIL LENGTH OF NEED US 51	F.A.P. RTE.	SECTION	COUNTY	TOTAL SHEETS	SHEET NO.
			DRAWN - BAB	REVISED -			322	3VB-3	JACKSON	124	103
		PLOT SCALE = 50.000 ' / in.	CHECKED - SJK	REVISED -					CONTRACT NO. 78937		
		PLOT DATE = 8/21/2025	DATE - 5/2025	REVISED -		SCALE: N.T.S. SHEET 1 OF 1 SHEETS STA. TO STA.		ILLINOIS	FED. AID PROJECT		

FINAL SURVEY		BY	DATE
NOTE BOOK NO.	SURVEYED		
	PLOTTED		
	TEMPLATE		
	AREAS		
	AREAS CHECKED		

ORIGINAL SURVEY		BY	DATE
NOTE BOOK NO.	SURVEYED		
	PLOTTED		
	TEMPLATE		
	AREAS		
	AREAS CHECKED		

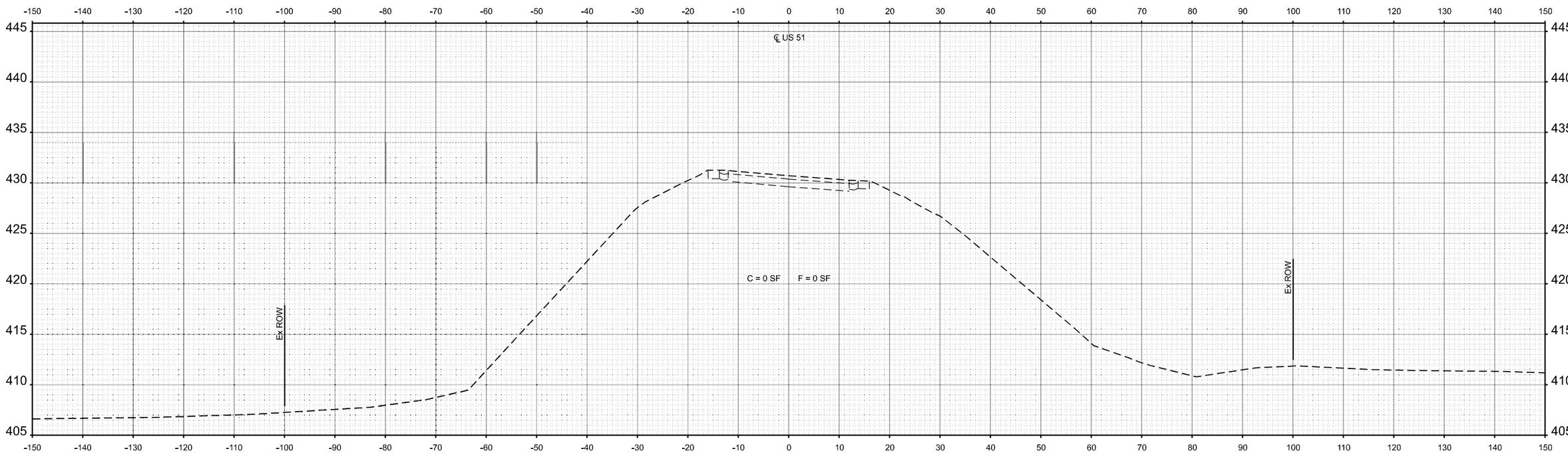

STA 423+00.00

MODEL: Ex_US51 - 423+00.00
FILE NAME: P:\2021\2120197A - US 51 over ICRR Bridge Replacement (Phase I)\4 CADD - DWG\4.7 Tran\CAD_Sheets\D978937-sht-XSEC.dgn

TWM ENGINEERING & GEOSPATIAL SERVICES	TWM, INC. WWW.TWM-INC.COM IL DESIGN FIRM LICENSE NO: 184-001220	USER NAME = bbillhartz	DESIGNED - TBP	REVISED -
			DRAWN - BAB	REVISED -
		PLOT SCALE = 19.99996000 ' / in.	CHECKED - SJK	REVISED -
		PLOT DATE = 8/21/2025	DATE - 5/2025	REVISED -

STATE OF ILLINOIS
DEPARTMENT OF TRANSPORTATION

CROSS SECTIONS
US 51

SCALE: 1"=10' | SHEET 1 OF 21 SHEETS | STA. 423+00.00 | TO STA. 423+00.00

F.A.P. RTE.	SECTION	COUNTY	TOTAL SHEETS	SHEET NO.
322	3VB-3	JACKSON	124	104
		CONTRACT NO. 78937		
		ILLINOIS	FED. AID PROJECT	

FINAL SURVEY		BY	DATE
NOTE BOOK	SURVEYED		
	PLOTTED		
	TEMPLATE		
	AREAS		
NO.	AREAS CHECKED		

ORIGINAL SURVEY		BY	DATE
NOTE BOOK	SURVEYED		
	PLOTTED		
	TEMPLATE		
	AREAS		
NO.	AREAS CHECKED		

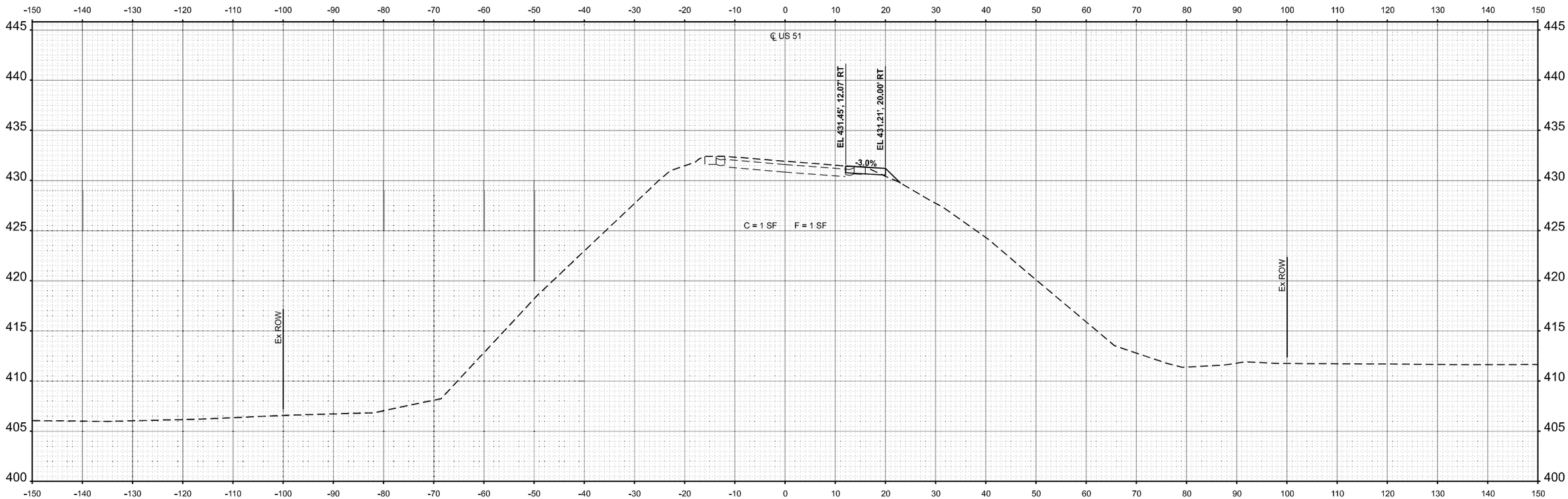

STA 423+50.00

MODEL: Ex_US51 - 423+50.00
FILE NAME: P:\2022\2220197A - US 51 over ICRR Bridge Replacement (Phase II)\4 CADD - DWG\4.7 Tran\CAD_Sheets\D978937-sht-XSEC.dgn

TWM ENGINEERING & GEOSPATIAL SERVICES	TWM, INC. WWW.TWM-INC.COM IL DESIGN FIRM LICENSE NO: 184-001220	USER NAME = bbillhartz	DESIGNED - TBP
			DRAWN - BAB
		PLOT SCALE = 19.99996000 ' / in.	CHECKED - SJK
		PLOT DATE = 8/21/2025	DATE - 5/2025

REVISED	-
REVISED	-
REVISED	-
REVISED	-

STATE OF ILLINOIS
DEPARTMENT OF TRANSPORTATION

CROSS SECTIONS
US 51

SCALE: 1"=10' | SHEET 2 OF 21 SHEETS | STA. 423+50.00 TO STA. 423+50.00

F.A.P. RTE.	SECTION	COUNTY	TOTAL SHEETS	SHEET NO.
322	3VB-3	JACKSON	124	105

CONTRACT NO. 78937

ILLINOIS | FED. AID PROJECT

FINAL SURVEY		BY	DATE
NOTE BOOK NO.	SURVEYED ____ PLOTTED ____ TEMPLATE ____ AREAS ____ AREAS CHECKED ____		

ORIGINAL SURVEY		BY	DATE
NOTE BOOK NO.	SURVEYED ____ PLOTTED ____ TEMPLATE ____ AREAS ____ AREAS CHECKED ____		

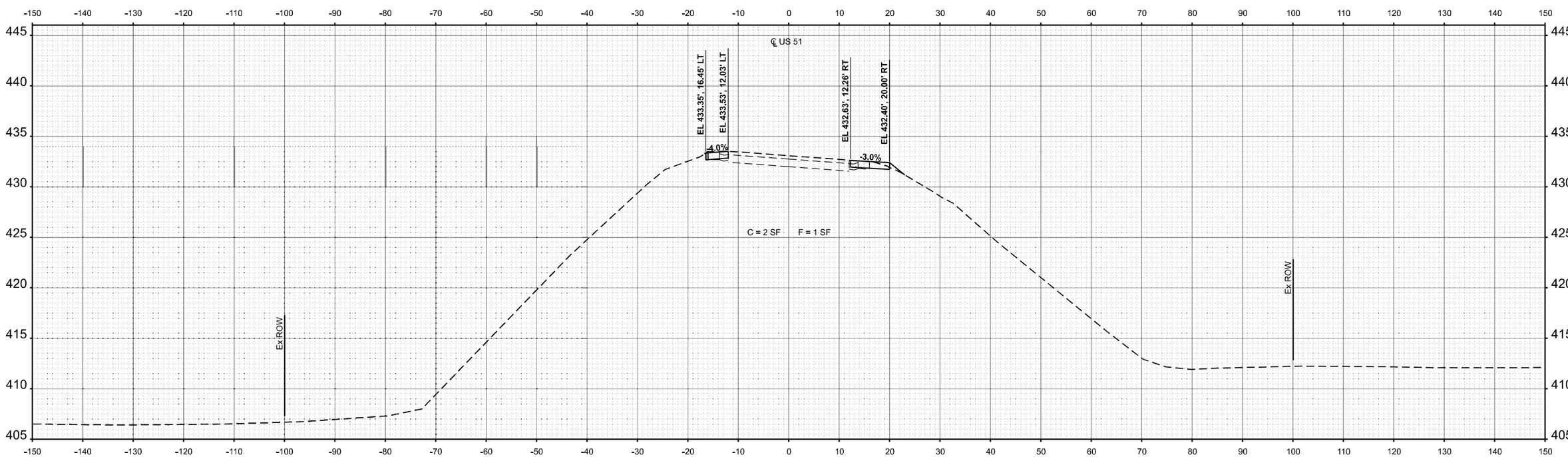

STA 424+00.00

MODEL: Ex_US51 - 424+00.00
FILE NAME: P:\2022\2019\7A - US 51 over ICRR Bridge Replacement (Phase I)\4 CADD - DWG\4.7 Tran\CAD_Sheets\D978937-sht-XSEC.dgn

TWM ENGINEERING GEOSPATIAL SERVICES	TWM, INC. WWW.TWM-INC.COM IL DESIGN FIRM LICENSE NO: 184-001220	USER NAME = bbillhartz	DESIGNED - TBP
			DRAWN - BAB
		PLOT SCALE = 19.99996000 ' / in.	CHECKED - SJK
		PLOT DATE = 8/21/2025	DATE - 5/2025

REVISED -
REVISED -
REVISED -
REVISED -

STATE OF ILLINOIS
DEPARTMENT OF TRANSPORTATION

CROSS SECTIONS
US 51

SCALE: 1"=10' | SHEET 3 OF 21 SHEETS | STA. 424+00.00 TO STA. 424+00.00

F.A.P. RTE.	SECTION	COUNTY	TOTAL SHEETS	SHEET NO.
322	3VB-3	JACKSON	124	106

CONTRACT NO. 78937

ILLINOIS | FED. AID PROJECT

FINAL SURVEY		BY	DATE
NOTE BOOK	SURVEYED		
	PLOTTED		
	TEMPLATE		
	AREAS		
NO.	AREAS CHECKED		

ORIGINAL SURVEY		BY	DATE
NOTE BOOK	SURVEYED		
	PLOTTED		
	TEMPLATE		
	AREAS		
NO.	AREAS CHECKED		

BEGIN IMPROVEMENTS
STA 424+96.19

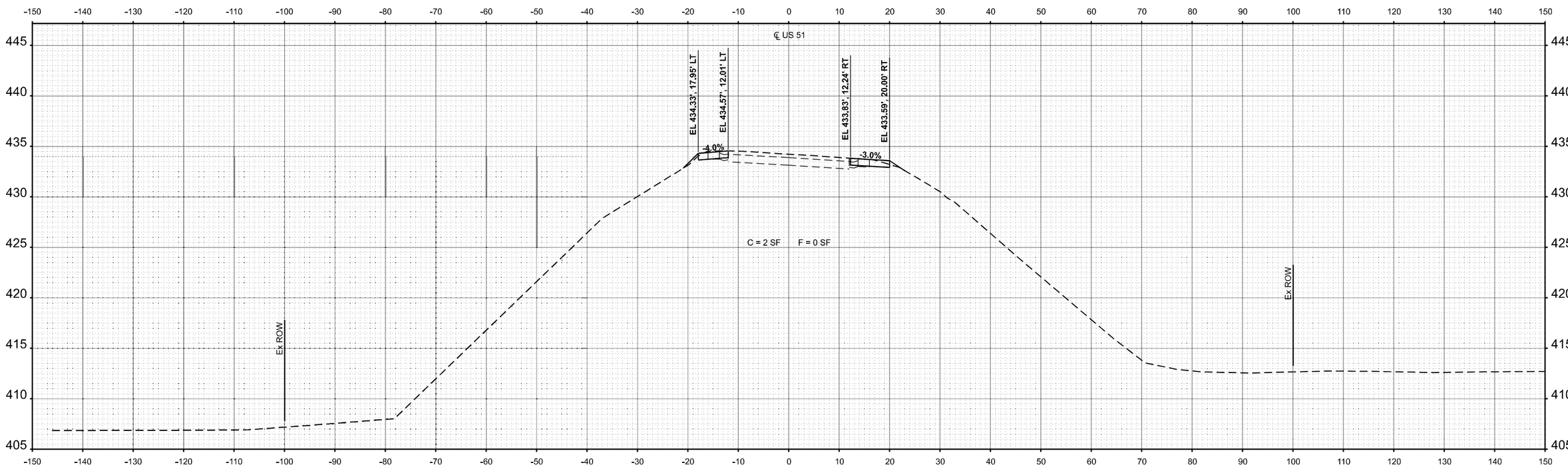

STA 424+50.00

MODEL: Ex_US51 - 424+50.00
FILE NAME: P:\2022\220197A - US 51 over ICRR Bridge Replacement (Phase I)\4 CADD - DWG\4.7 Tran\CAD_Sheets\D978937-sht-XSEC.dgn

TWM ENGINEERING GEOSPATIAL SERVICES	TWM, INC. WWW.TWM-INC.COM IL DESIGN FIRM LICENSE NO: 184-001220	USER NAME = bbillhartz	DESIGNED - TBP
			DRAWN - BAB
		PLOT SCALE = 19.99996000 ' / in.	CHECKED - SJK
		PLOT DATE = 8/21/2025	DATE - 5/2025

REVISED -
REVISED -
REVISED -
REVISED -

STATE OF ILLINOIS
DEPARTMENT OF TRANSPORTATION

CROSS SECTIONS
US 51

SCALE: 1"=10' | SHEET 4 OF 21 SHEETS | STA. 424+50.00 TO STA. 424+50.00

F.A.P. RTE.	SECTION	COUNTY	TOTAL SHEETS	SHEET NO.
322	3VB-3	JACKSON	124	107

CONTRACT NO. 78937

ILLINOIS | FED. AID PROJECT

FINAL SURVEY		BY	DATE
NOTE BOOK NO.	SURVEYED		
	PLOTTED		
	TEMPLATE		
	AREAS		
	AREAS CHECKED		

ORIGINAL SURVEY		BY	DATE
NOTE BOOK NO.	SURVEYED		
	PLOTTED		
	TEMPLATE		
	AREAS		
	AREAS CHECKED		

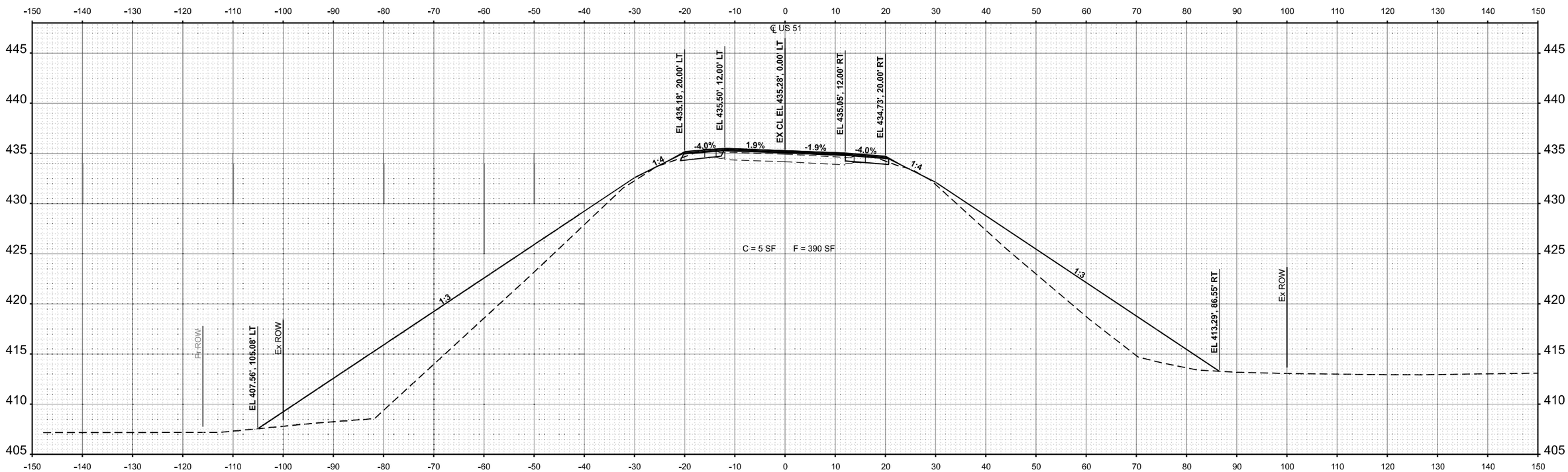

STA 425+00.00

MODEL: Ex_US51 - 425+00.00 R2
FILE NAME: P:\2022\2023197A - US 51 over ICRR Bridge Replacement (Phase II)\4 CADD - DWG\4.7 Tram\CAD_Sheets\D978937-sht-XSEC.dgn

TWM ENGINEERING & GEOSPATIAL SERVICES	TWM, INC. WWW.TWM-INC.COM IL DESIGN FIRM LICENSE NO: 184-001220	USER NAME = bbillhartz	DESIGNED - TBP
			DRAWN - BAB
		PLOT SCALE = 19.99996000 ' / in.	CHECKED - SJK
		PLOT DATE = 8/21/2025	DATE - 5/2025

REVISED	-
REVISED	-
REVISED	-
REVISED	-

STATE OF ILLINOIS
DEPARTMENT OF TRANSPORTATION

CROSS SECTIONS
US 51

SCALE: 1"=10' | SHEET 5 OF 21 SHEETS | STA. 425+00.00 TO STA. 425+00.00

F.A.P. RTE.	SECTION	COUNTY	TOTAL SHEETS	SHEET NO.
322	3VB-3	JACKSON	124	108

CONTRACT NO. 78937

ILLINOIS | FED. AID PROJECT

FINAL SURVEY		BY	DATE
NOTE BOOK	SURVEYED		
	PLOTTED		
	TEMPLATE		
	AREAS		
NO.	AREAS CHECKED		

ORIGINAL SURVEY		BY	DATE
NOTE BOOK	SURVEYED		
	PLOTTED		
	TEMPLATE		
	AREAS		
NO.	AREAS CHECKED		

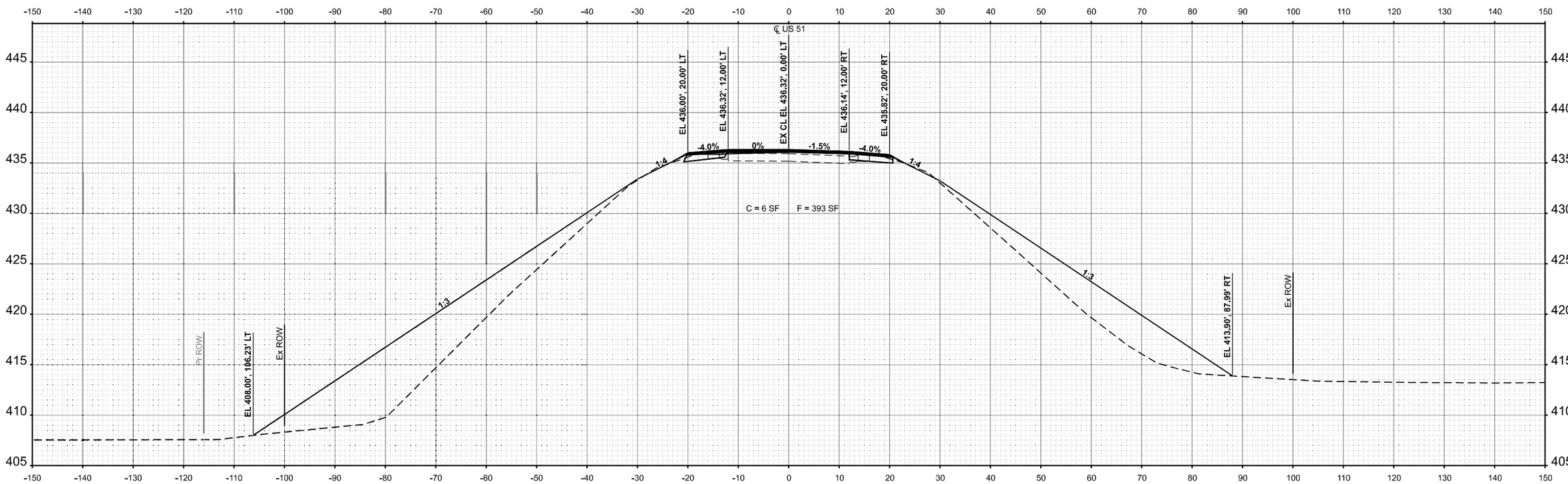

STA 425+50.00

MODEL: Ex_US51 - 425+50.00 R2
FILE NAME: P:\2022\22019TA - US 51 over ICRR Bridge Replacement (Phase I)\4 CADD - DWG\4.7 Tran\CAD_Sheets\D978937-sht-XSEC.dgn

TWM ENGINEERING & GEOSPATIAL SERVICES	TWM, INC. WWW.TWM-INC.COM IL DESIGN FIRM LICENSE NO: 184-001220	USER NAME = bbillhartz	DESIGNED - TBP	REVISED -
			DRAWN - BAB	REVISED -
		PLOT SCALE = 19.99996000 ' / in.	CHECKED - SJK	REVISED -
		PLOT DATE = 8/21/2025	DATE - 5/2025	REVISED -

STATE OF ILLINOIS
DEPARTMENT OF TRANSPORTATION

CROSS SECTIONS
US 51

SCALE: 1"=10' | SHEET 6 OF 21 SHEETS | STA. 425+50.00 | TO STA. 425+50.00

F.A.P. RTE.	SECTION	COUNTY	TOTAL SHEETS	SHEET NO.
322	3VB-3	JACKSON	124	109
		CONTRACT NO. 78937		
		ILLINOIS	FED. AID PROJECT	

FINAL SURVEY		BY	DATE
NOTE BOOK NO.	SURVEYED ____ PLOTTED ____ TEMPLATE ____ AREAS ____ AREAS CHECKED ____		

ORIGINAL SURVEY		BY	DATE
NOTE BOOK NO.	SURVEYED ____ PLOTTED ____ TEMPLATE ____ AREAS ____ AREAS CHECKED ____		

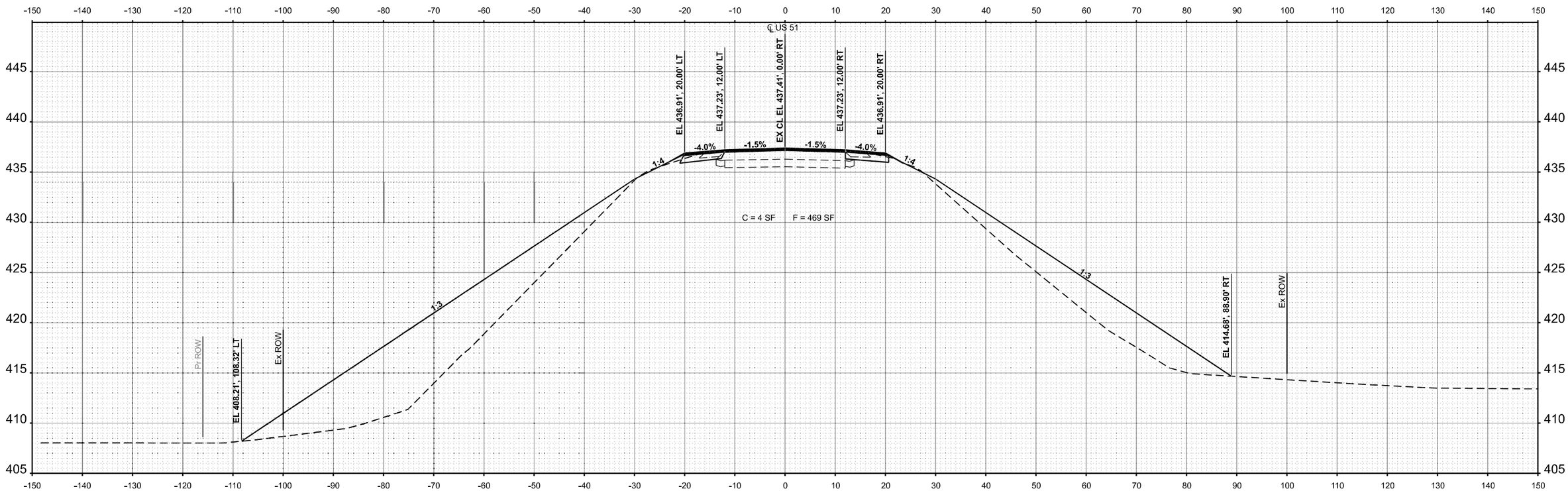

STA 426+00.00

MODEL: Ex_US51 - 426+00.00 R2
FILE NAME: P:\2022\2021970A - US 51 over ICRR Bridge Replacement (Phase 1)\4 CADD - DWG\4.7 Tran\CAD_Sheets\D978937-sht-XSEC.dgn

TWM ENGINEERING & GEOSPATIAL SERVICES	TWM, INC. WWW.TWM-INC.COM IL DESIGN FIRM LICENSE NO: 184-001220	USER NAME = bbillhartz	DESIGNED - TBP
			DRAWN - BAB
		PLOT SCALE = 19.99996000 ' / in.	CHECKED - SJK
		PLOT DATE = 8/21/2025	DATE - 5/2025

REVISED -		
REVISED -		
REVISED -		
REVISED -		

STATE OF ILLINOIS
DEPARTMENT OF TRANSPORTATION

CROSS SECTIONS
US 51

SCALE: 1"=10' | SHEET 7 OF 21 SHEETS | STA. 426+00.00 TO STA. 426+00.00

F.A.P. RTE.	SECTION	COUNTY	TOTAL SHEETS	SHEET NO.
322	3VB-3	JACKSON	124	110
		CONTRACT NO. 78937		
		ILLINOIS	FED. AID PROJECT	

FINAL SURVEY		BY	DATE
NOTE BOOK NO.	SURVEYED		
	PLOTTED		
	TEMPLATE		
	AREAS		
	AREAS CHECKED		

ORIGINAL SURVEY		BY	DATE
NOTE BOOK NO.	SURVEYED		
	PLOTTED		
	TEMPLATE		
	AREAS		
	AREAS CHECKED		

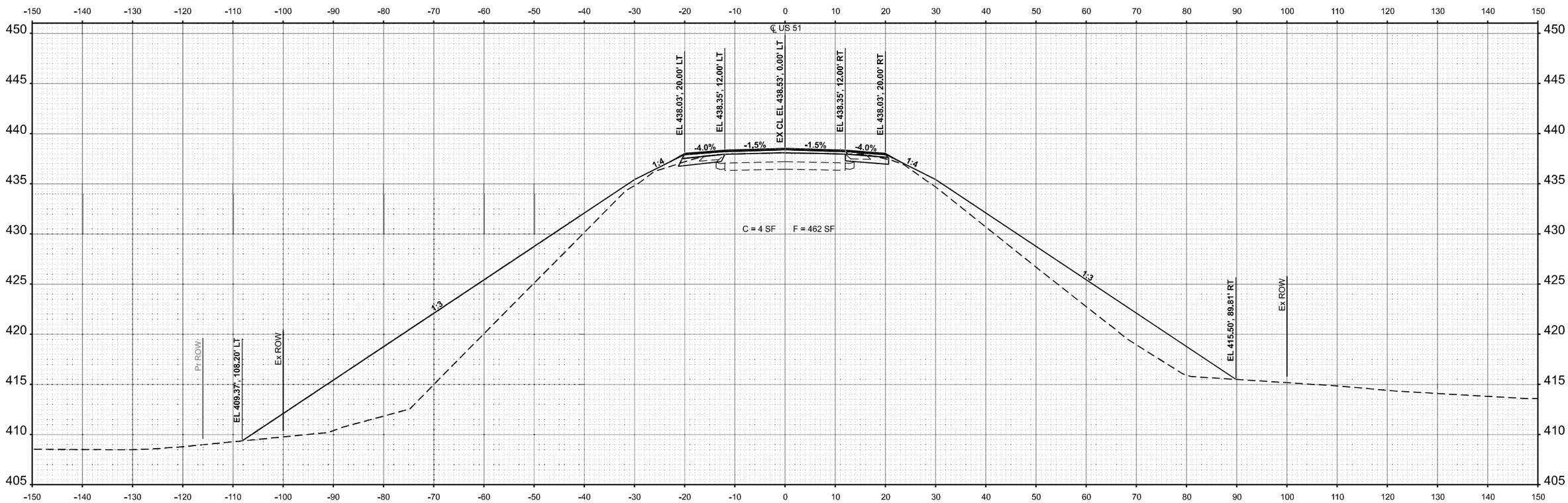

STA 426+50.00

MODEL: Ex_US51 - 426+50.00 R2
FILE NAME: P:\2022\2019\7A - US 51 over ICRR Bridge Replacement (Phase I)\4 CADD - DVGN\4.7 Tran\CAD_Sheets\D978937-sht-XSEC.dgn

TWM ENGINEERING GEOSPATIAL SERVICES	TWM, INC. WWW.TWM-INC.COM IL DESIGN FIRM LICENSE NO: 184-001220	USER NAME = bbillhartz	DESIGNED - TBP	REVISED -	STATE OF ILLINOIS DEPARTMENT OF TRANSPORTATION	CROSS SECTIONS US 51	F.A.P. RTE. 322	SECTION 3VB-3	COUNTY JACKSON	TOTAL SHEETS 124	SHEET NO. 111
			DRAWN - BAB	REVISED -					CONTRACT NO. 78937		
		PLOT SCALE = 19.99996000 ' / in.	CHECKED - SJK	REVISED -							
		PLOT DATE = 8/21/2025	DATE - 5/2025	REVISED -		SCALE: 1"=10' SHEET 8 OF 21 SHEETS STA. 426+50.00 TO STA. 426+50.00			ILLINOIS FED. AID PROJECT		

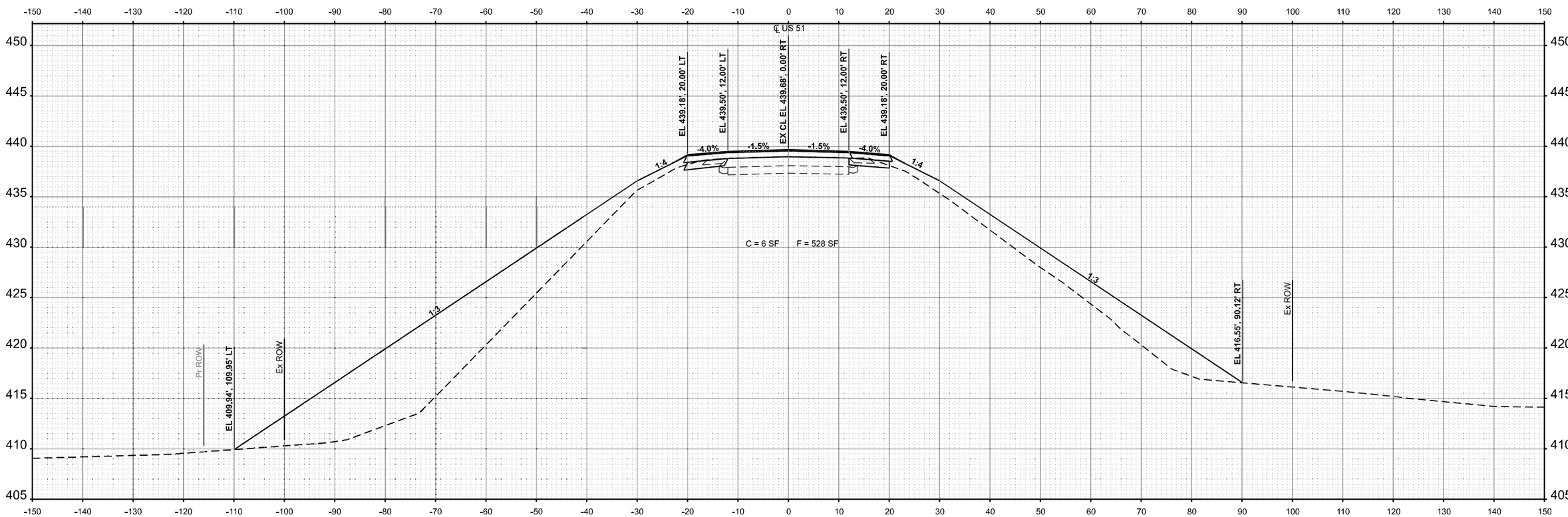

STA 427+00.00

FINAL SURVEY	BY	DATE
SURVEYED		
PLOTTED		
TEMPLATE		
AREAS		
AREAS CHECKED		
NOTE BOOK NO.		

ORIGINAL SURVEY	BY	DATE
SURVEYED		
PLOTTED		
TEMPLATE		
AREAS		
AREAS CHECKED		
NOTE BOOK NO.		

MODEL: Ex_US51 - 427+00.00 R2
FILE NAME: P:\2022\2220197A - US 51 over ICRR Bridge Replacement (Phase II)\4 CADD - DWG\4.7 Tran\CAD_Sheets\D978937-sht-XSEC.dgn

TWM ENGINEERING & GEOSPATIAL SERVICES

TWM, INC.
WWW.TWM-INC.COM
IL DESIGN FIRM LICENSE NO: 184-001220

USER NAME = bbillhartz	DESIGNED - TBP	REVISED -
	DRAWN - BAB	REVISED -
PLOT SCALE = 19.99996000 ' / in.	CHECKED - SJK	REVISED -
PLOT DATE = 8/21/2025	DATE - 5/2025	REVISED -

STATE OF ILLINOIS
DEPARTMENT OF TRANSPORTATION

CROSS SECTIONS
US 51

SCALE: 1"=10' | SHEET 9 OF 21 SHEETS | STA. 427+00.00 TO STA. 427+00.00

F.A.P. RTE.	SECTION	COUNTY	TOTAL SHEETS	SHEET NO.
322	3VB-3	JACKSON	124	112

CONTRACT NO. 78937

ILLINOIS | FED. AID PROJECT

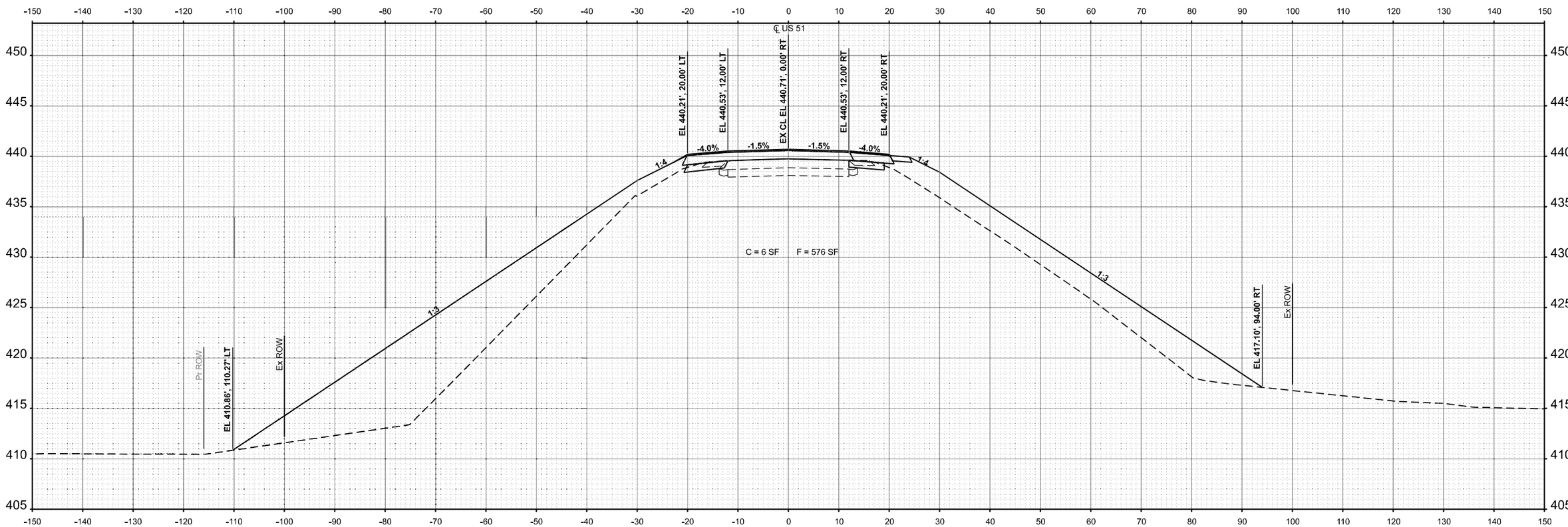

STA 427+50.00

FINAL SURVEY		BY	DATE
NOTE BOOK NO.	SURVEYED		
	PLOTTED		
	TEMPLATE		
	AREAS		
	AREAS CHECKED		

ORIGINAL SURVEY		BY	DATE
NOTE BOOK NO.	SURVEYED		
	PLOTTED		
	TEMPLATE		
	AREAS		
	AREAS CHECKED		

MODEL: Ex_US51 - 427+50.00 R2
FILE NAME: P:\2022\2220197A - US 51 over ICRR Bridge Replacement (Phase I)\4 CADD - DWG\4.7 Tran\CAD_Sheets\D978937-sht-XSEC.dgn

TWM ENGINEERING & GEOSPATIAL SERVICES — TWM, INC. WWW.TWM-INC.COM — IL DESIGN FIRM LICENSE NO: 184-001220	USER NAME = bbillhartz	DESIGNED - TBP	REVISED -
		DRAWN - BAB	REVISED -
	PLOT SCALE = 19.99996000 ' / in.	CHECKED - SJK	REVISED -
	PLOT DATE = 8/21/2025	DATE - 5/2025	REVISED -

STATE OF ILLINOIS
DEPARTMENT OF TRANSPORTATION

CROSS SECTIONS
US 51

SCALE: 1"=10' | SHEET 10 OF 21 SHEETS | STA. 427+50.00 | TO STA. 427+50.00

F.A.P. RTE.	SECTION	COUNTY	TOTAL SHEETS	SHEET NO.
322	3VB-3	JACKSON	124	113
		CONTRACT NO. 78937		
		ILLINOIS FED. AID PROJECT		

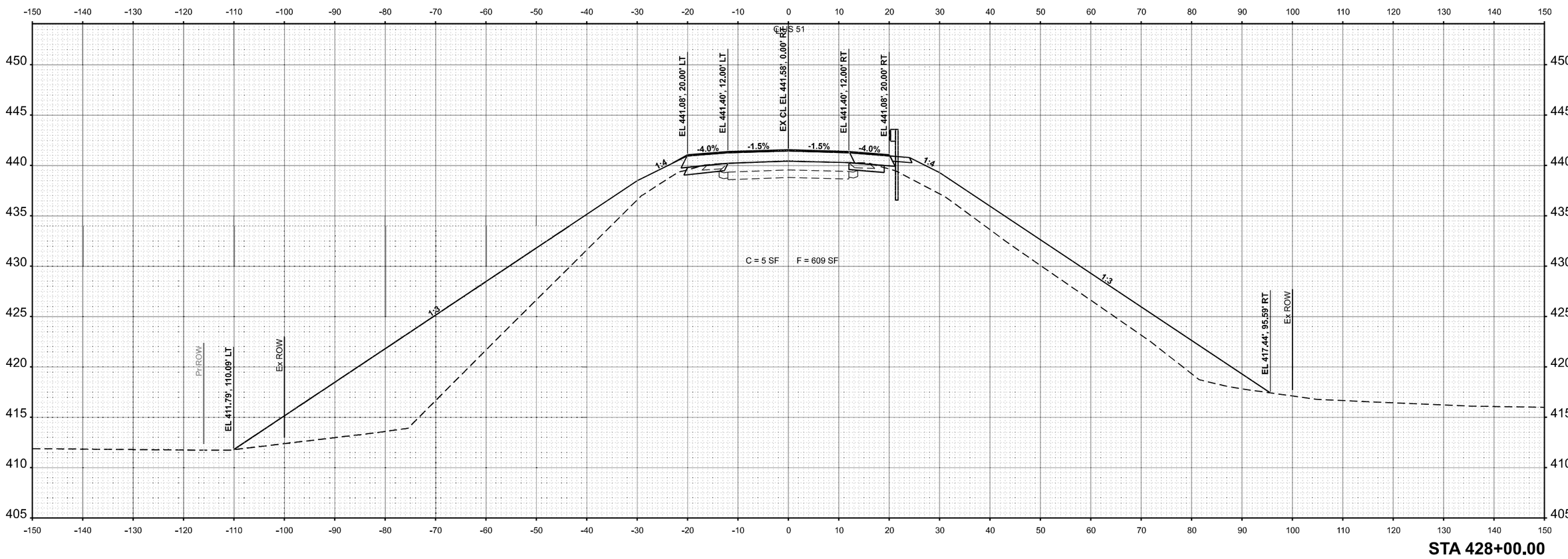

STA 428+00.00

FINAL SURVEY		BY	DATE
NOTE BOOK	SURVEYED		
	PLOTTED		
	TEMPLATE		
	AREAS		
NO.	AREAS CHECKED		

ORIGINAL SURVEY		BY	DATE
NOTE BOOK	SURVEYED		
	PLOTTED		
	TEMPLATE		
	AREAS		
NO.	AREAS CHECKED		

MODEL: Ex_US51 - 428+00.00 R2
FILE NAME: P:\2022\2201197A - US 51 over ICRR Bridge Replacement (Phase I)\4 CADD - DWG\4.7 Trans\CAD_Sheets\D978937-sht-XSEC.dgn

TWM ENGINEERING GEOSPATIAL SERVICES	TWM, INC. WWW.TWM-INC.COM	USER NAME = bbillhartz	DESIGNED - TBP	REVISED -
	IL DESIGN FIRM LICENSE NO: 184-001220		DRAWN - BAB	REVISED -
		PLOT SCALE = 19.99996000 ' / in.	CHECKED - SJK	REVISED -
		PLOT DATE = 8/21/2025	DATE - 5/2025	REVISED -

STATE OF ILLINOIS
DEPARTMENT OF TRANSPORTATION

CROSS SECTIONS
US 51

SCALE: 1"=10' | SHEET 11 OF 21 SHEETS | STA. 428+00.00 | TO STA. 428+00.00

F.A.P. RTE.	SECTION	COUNTY	TOTAL SHEETS	SHEET NO.
322	3VB-3	JACKSON	124	114

CONTRACT NO. 78937

ILLINOIS | FED. AID PROJECT

FINAL SURVEY		BY	DATE
NOTE BOOK NO.	SURVEYED		
	PLOTTED		
	TEMPLATE		
	AREAS		
	AREAS CHECKED		

ORIGINAL SURVEY		BY	DATE
NOTE BOOK NO.	SURVEYED		
	PLOTTED		
	TEMPLATE		
	AREAS		
	AREAS CHECKED		

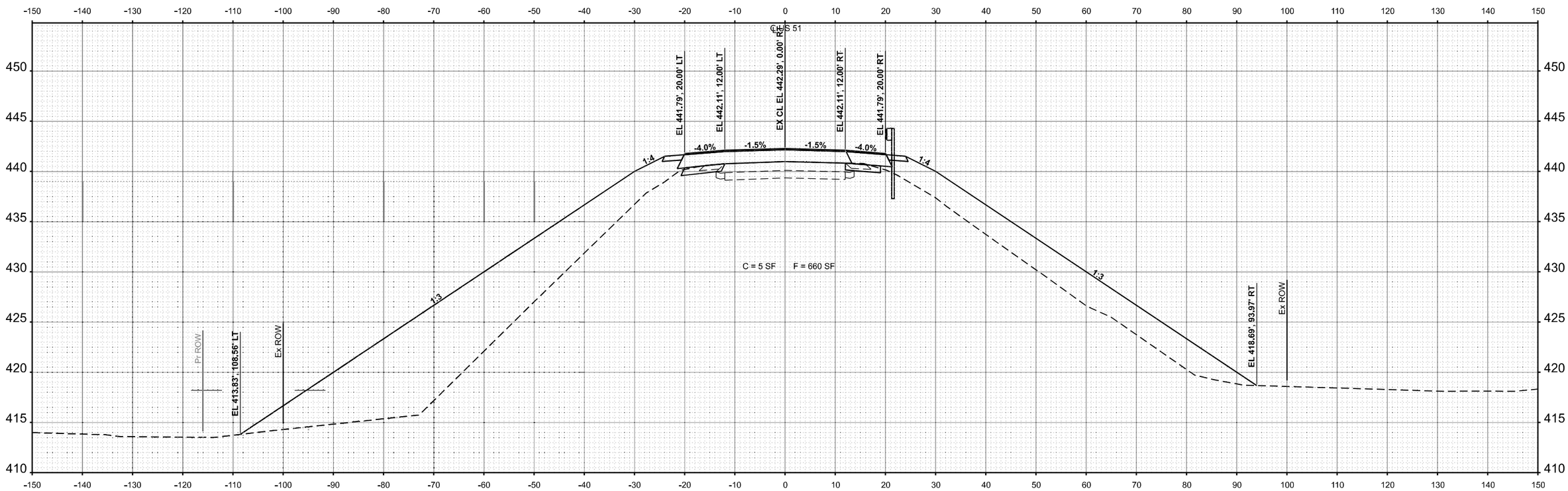

STA 428+50.00

MODEL: Ex_US51 - 428+50.00 R2
FILE NAME: P:\2022\2120197A - US 51 over ICRR Bridge Replacement (Phase I)\4 CADD - DWG\4.7 TranCAD_Sheets\D78937-sht-XSEC.dgn

TWM ENGINEERING & GEOSPATIAL SERVICES	TWM, INC. WWW.TWM-INC.COM IL DESIGN FIRM LICENSE NO: 184-001220	USER NAME = bbillhartz	DESIGNED - TBP
			DRAWN - BAB
		PLOT SCALE = 19.99996000 ' / in.	CHECKED - SJK
		PLOT DATE = 8/21/2025	DATE - 5/2025

REVISED -
REVISED -
REVISED -
REVISED -

STATE OF ILLINOIS
DEPARTMENT OF TRANSPORTATION

CROSS SECTIONS
US 51

SCALE: 1"=10' | SHEET 12 OF 21 SHEETS | STA. 428+50.00 TO STA. 428+50.00

F.A.P. RTE.	SECTION	COUNTY	TOTAL SHEETS	SHEET NO.
322	3VB-3	JACKSON	124	115

CONTRACT NO. 78937

ILLINOIS | FED. AID PROJECT

FINAL SURVEY		BY	DATE
NOTE BOOK NO.	SURVEYED ____ PLOTTED ____ TEMPLATE ____ AREAS ____ AREAS CHECKED ____		

ORIGINAL SURVEY		BY	DATE
NOTE BOOK NO.	SURVEYED ____ PLOTTED ____ TEMPLATE ____ AREAS ____ AREAS CHECKED ____		

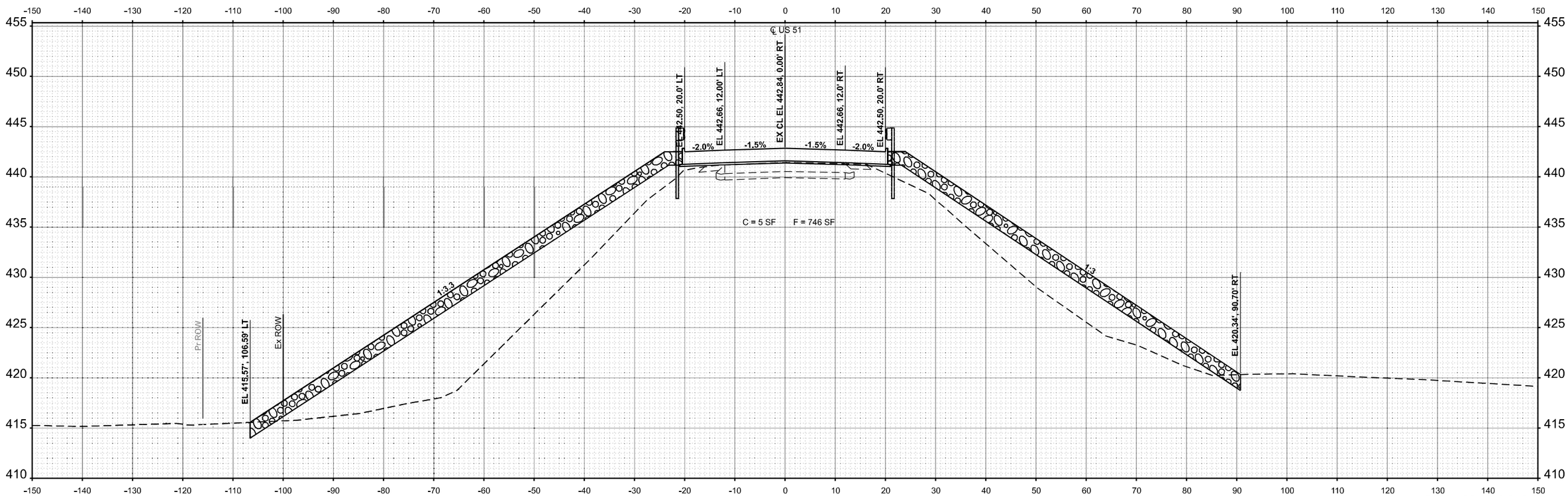

STA 428+99.28

BRIDGE APPROACH PAVEMENT CONNECTOR (SPECIAL)

MODEL: Ex_US51 - 429+00.00 R2
FILE NAME: P:\2022\22019\A - US 51 over ICRR Bridge Replacement (Phase II)\4 CADD - DWG\4.7 Tran\CAD_Sheets\D978937-sht-XSEC.dgn

TWM ENGINEERING GEOSPATIAL SERVICES	TWM, INC. WWW.TWM-INC.COM	USER NAME = bbillhartz	DESIGNED - TBP
	IL DESIGN FIRM LICENSE NO: 184-001220		DRAWN - BAB
		PLOT SCALE = 19.99996000 ' / in.	CHECKED - SJK
		PLOT DATE = 8/21/2025	DATE - 5/2025

REVISED	-
REVISED	-
REVISED	-
REVISED	-

STATE OF ILLINOIS
DEPARTMENT OF TRANSPORTATION

CROSS SECTIONS
US 51

SCALE: 1"=10' | SHEET 13 OF 21 SHEETS | STA. 429+00.00 TO STA. 429+00.00

F.A.P. RTE.	SECTION	COUNTY	TOTAL SHEETS	SHEET NO.
322	3VB-3	JACKSON	124	116

CONTRACT NO. 78937

ILLINOIS | FED. AID PROJECT

FINAL SURVEY		BY	DATE
NOTE BOOK NO.	SURVEYED		
	PLOTTED		
	TEMPLATE		
	AREAS		
	AREAS CHECKED		

ORIGINAL SURVEY		BY	DATE
NOTE BOOK NO.	SURVEYED		
	PLOTTED		
	TEMPLATE		
	AREAS		
	AREAS CHECKED		

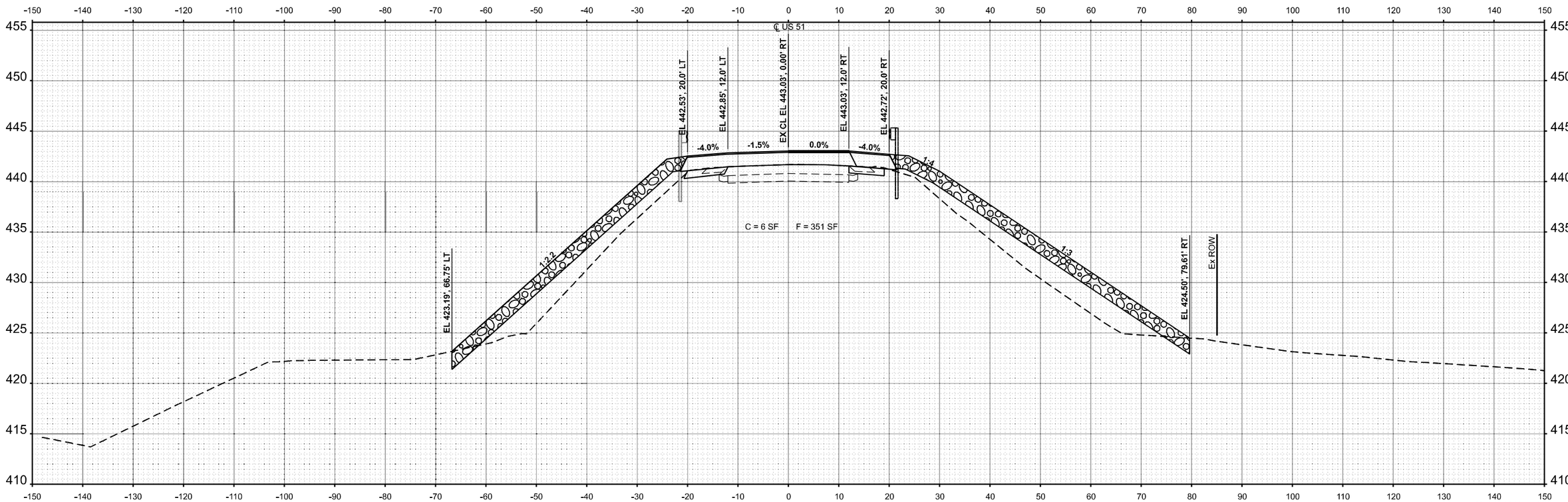

STA. 431+86.72

BRIDGE APPROACH PAVEMENT CONNECTOR (SPECIAL)

MODEL: Ex_US51 - 431+50.00 R2
FILE NAME: P:\2022\220197A - US 51 over ICRR Bridge Replacement (Phase II)\4 CADD - DWG\4.7 Tran\CAD_Sheets\D78937-sht-XSEC.dgn

TWM ENGINEERING & GEOSPATIAL SERVICES	TWM, INC. WWW.TWM-INC.COM	USER NAME = bbillhartz	DESIGNED - TBP
	IL DESIGN FIRM LICENSE NO: 184-001220		DRAWN - BAB
		PLOT SCALE = 19.99996000 ' / in.	CHECKED - SJK
		PLOT DATE = 8/21/2025	DATE - 5/2025

REVISED -
REVISED -
REVISED -
REVISED -

STATE OF ILLINOIS
DEPARTMENT OF TRANSPORTATION

CROSS SECTIONS
US 51

SCALE: | SHEET 14 OF 21 SHEETS | STA. | TO STA.

F.A.P. RTE.	SECTION	COUNTY	TOTAL SHEETS	SHEET NO.
322	3VB-3	JACKSON	124	117

CONTRACT NO. 78937

ILLINOIS | FED. AID PROJECT

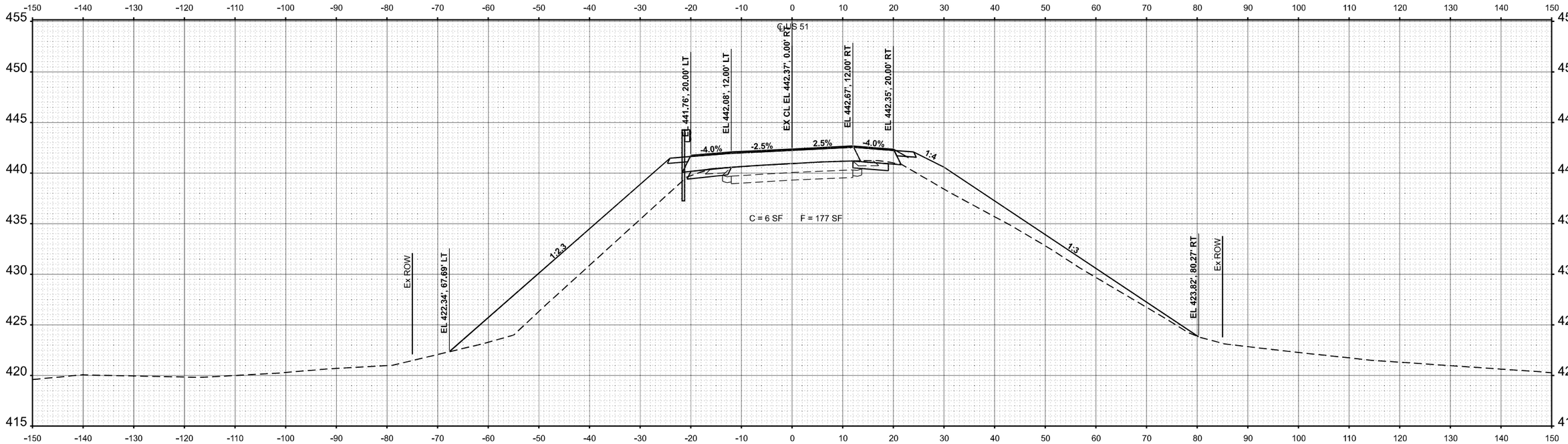

STA 432+50.00

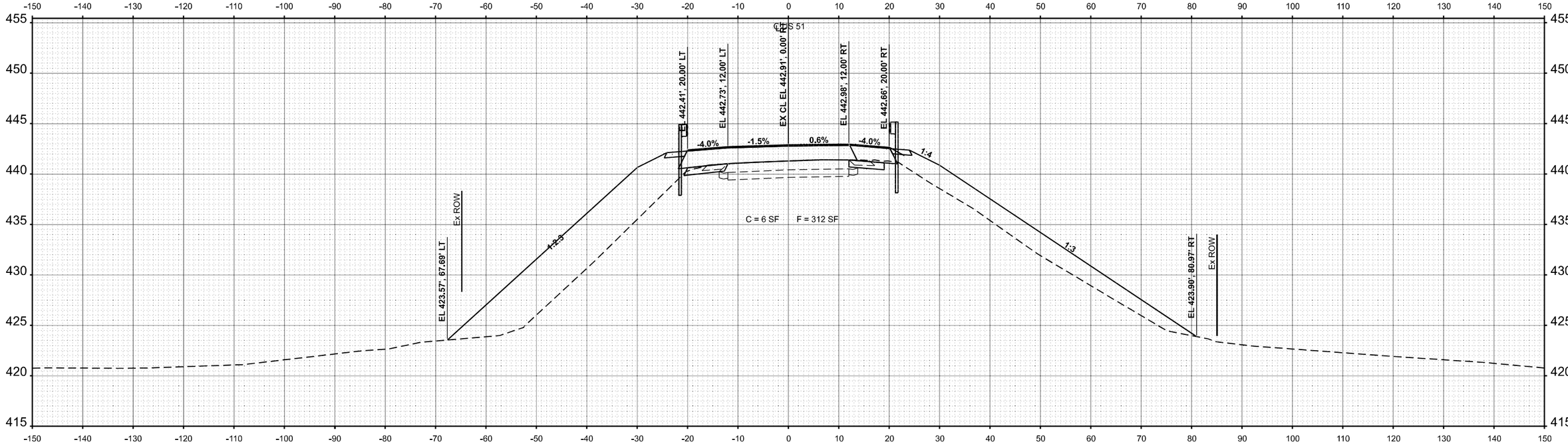

STA 432+00.00

FINAL SURVEY		BY	DATE
NOTE BOOK	SURVEYED		
	PLOTTED		
	TEMPLATE		
	AREAS		
NO.	AREAS CHECKED		

ORIGINAL SURVEY		BY	DATE
NOTE BOOK	SURVEYED		
	PLOTTED		
	TEMPLATE		
	AREAS		
NO.	AREAS CHECKED		

MODEL: Ex_US51 - 432+00.00 R2
FILE NAME: P:\2022\22019\A - US 51 over ICRR Bridge Replacement (Phase I)\4 CADD - DWG\4.7 Tran\CAD_Sheets\D978937-sht-XSEC.dgn

TWM ENGINEERING GEOSPATIAL SERVICES

TWM, INC.
WWW.TWM-INC.COM
IL DESIGN FIRM LICENSE NO: 184-001220

USER NAME = bbillhartz	DESIGNED - TBP	REVISED -	
	DRAWN - BAB	REVISED -	
PLOT SCALE = 19.99996000 ' / in.	CHECKED - SJK	REVISED -	
PLOT DATE = 8/21/2025	DATE - 5/2025	REVISED -	

STATE OF ILLINOIS
DEPARTMENT OF TRANSPORTATION

CROSS SECTIONS
US 51

SCALE: 1"=10' | SHEET 15 OF 21 SHEETS | STA. 432+00.00 | TO STA. 432+50.00

F.A.P. RTE.	SECTION	COUNTY	TOTAL SHEETS	SHEET NO.
322	3VB-3	JACKSON	124	118

CONTRACT NO. 78937

ILLINOIS | FED. AID PROJECT

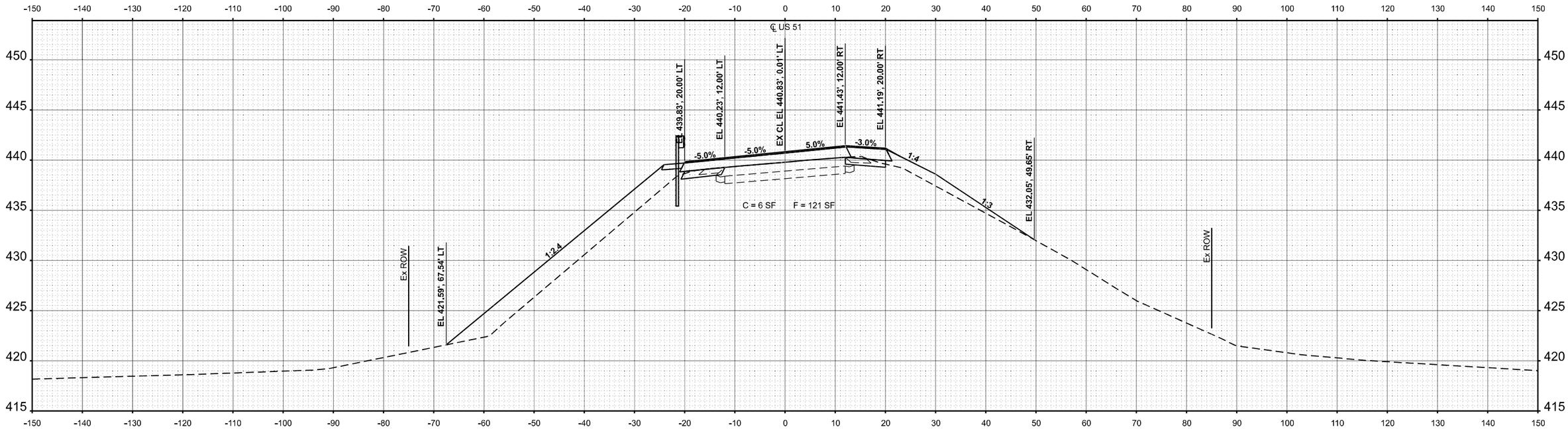

STA 433+50.00

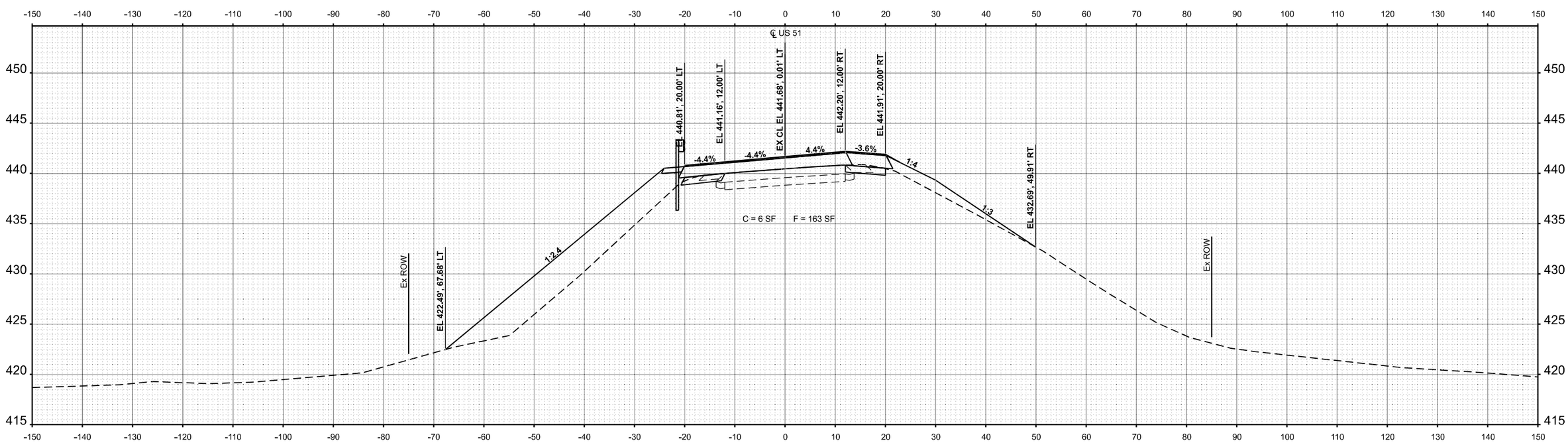

STA 433+00.00

FINAL SURVEY		BY	DATE
NOTE BOOK	SURVEYED		
	PLOTTED		
	TEMPLATE		
	AREAS		
NO.	AREAS CHECKED		

ORIGINAL SURVEY		BY	DATE
NOTE BOOK	SURVEYED		
	PLOTTED		
	TEMPLATE		
	AREAS		
NO.	AREAS CHECKED		

MODEL: Ex_US51 - 433+00.00 R2
FILE NAME: P:\2022\22019\A - US 51 over ICRR Bridge Replacement (Phase I)\4 CADD - DWG\4.7 Tran\CAD_Sheets\D978937-sht-XSEC.dgn

TWM ENGINEERING GEOSPATIAL SERVICES
TWM, INC.
WWW.TWM-INC.COM
IL DESIGN FIRM LICENSE NO: 184-001220

USER NAME = bbillhartz	DESIGNED - TBP	REVISED -	
	DRAWN - BAB	REVISED -	
PLOT SCALE = 19.99996000 ' / in.	CHECKED - SJK	REVISED -	
PLOT DATE = 8/21/2025	DATE - 5/2025	REVISED -	

STATE OF ILLINOIS
DEPARTMENT OF TRANSPORTATION

CROSS SECTIONS
US 51

SCALE: 1"=10' | SHEET 16 OF 21 SHEETS | STA. 433+00.00 | TO STA. 433+50.00

F.A.P. RTE.	SECTION	COUNTY	TOTAL SHEETS	SHEET NO.
322	3VB-3	JACKSON	124	119

CONTRACT NO. 78937

ILLINOIS | FED. AID PROJECT

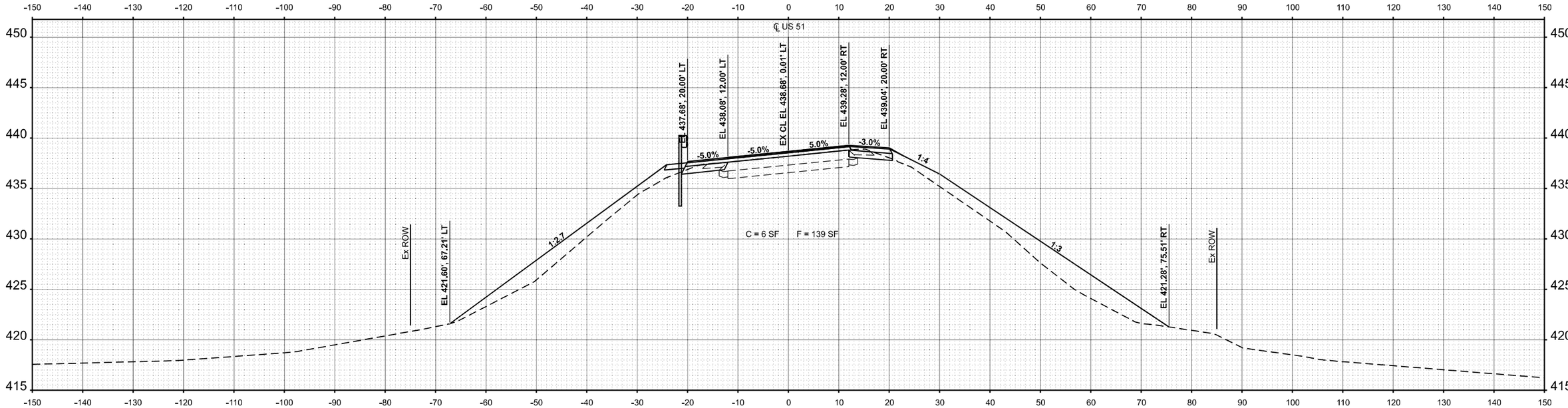

STA 434+50.00

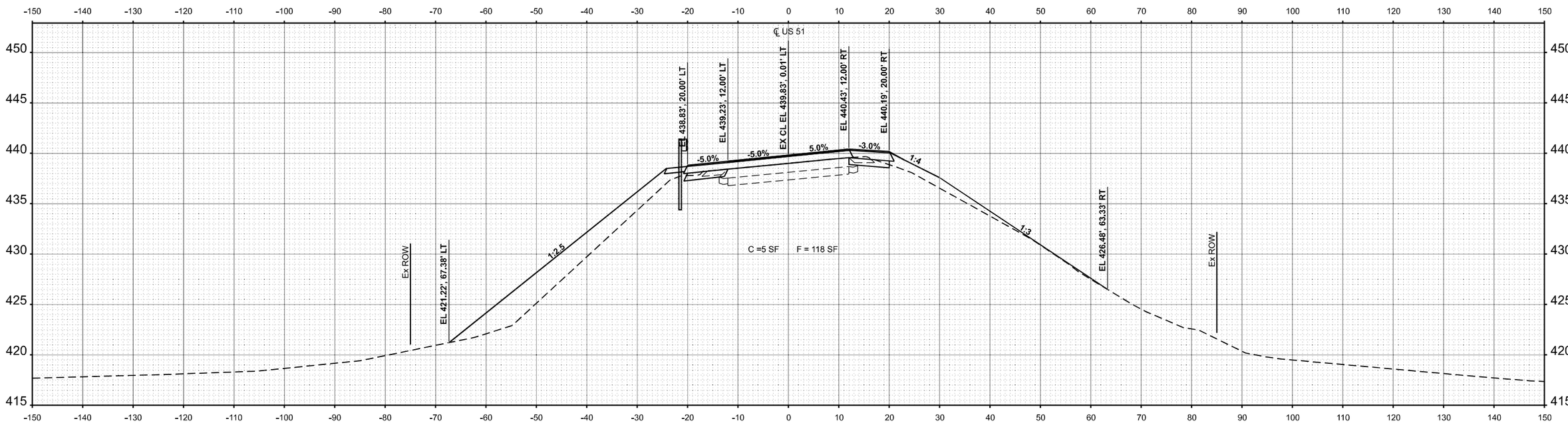

STA 434+00.00

FINAL SURVEY		BY	DATE
NOTE BOOK	SURVEYED		
	PLOTTED		
	TEMPLATE		
	AREAS		
NO.	AREAS CHECKED		

ORIGINAL SURVEY		BY	DATE
NOTE BOOK	SURVEYED		
	PLOTTED		
	TEMPLATE		
	AREAS		
NO.	AREAS CHECKED		

MODEL: Ex_US51 - 434+00.00 R2
FILE NAME: P:\2022\220197A - US 51 over ICRR Bridge Replacement (Phase II)\4 CADD - DWG\4.7 Tran\CAD_Sheets\D978937-sht-XSEC.dgn

TWM ENGINEERING GEOSPATIAL SERVICES	TWM, INC. WWW.TWM-INC.COM	USER NAME = bbillhartz	DESIGNED - TBP	REVISED -
	IL DESIGN FIRM LICENSE NO: 184-001220		DRAWN - BAB	REVISED -
		PLOT SCALE = 19.99996000 ' / in.	CHECKED - SJK	REVISED -
		PLOT DATE = 8/21/2025	DATE - 5/2025	REVISED -

STATE OF ILLINOIS
DEPARTMENT OF TRANSPORTATION

CROSS SECTIONS
US 51

SCALE: 1"=10' | SHEET 17 OF 21 SHEETS | STA. 434+00.00 | TO STA. 434+50.00

F.A.P. RTE.	SECTION	COUNTY	TOTAL SHEETS	SHEET NO.
322	3VB-3	JACKSON	124	120
		CONTRACT NO. 78937		
		ILLINOIS	FED. AID PROJECT	

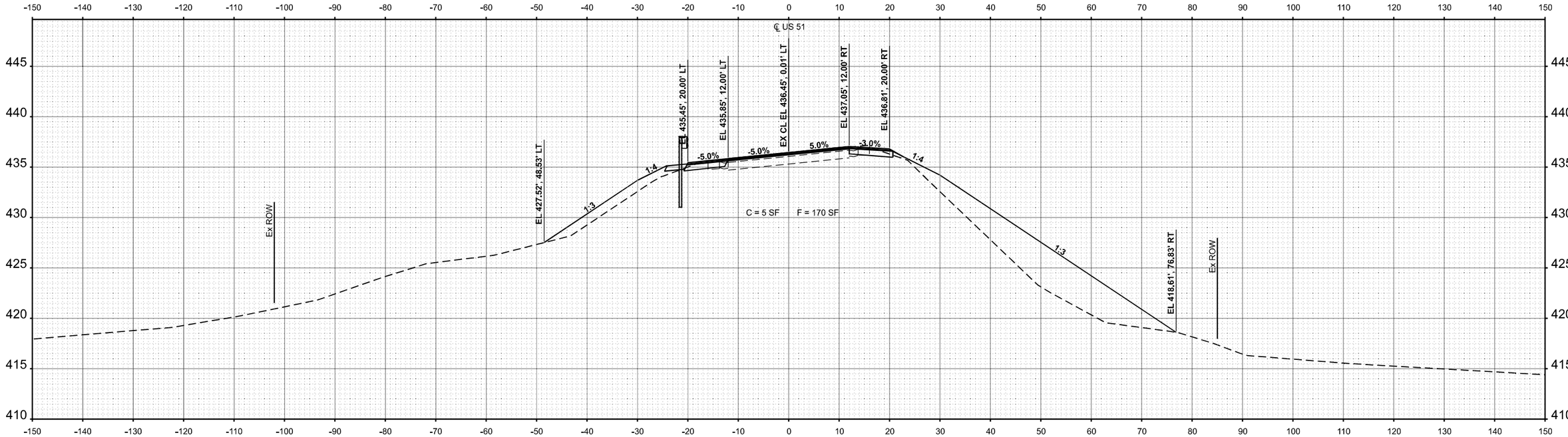

STA 435+50.00

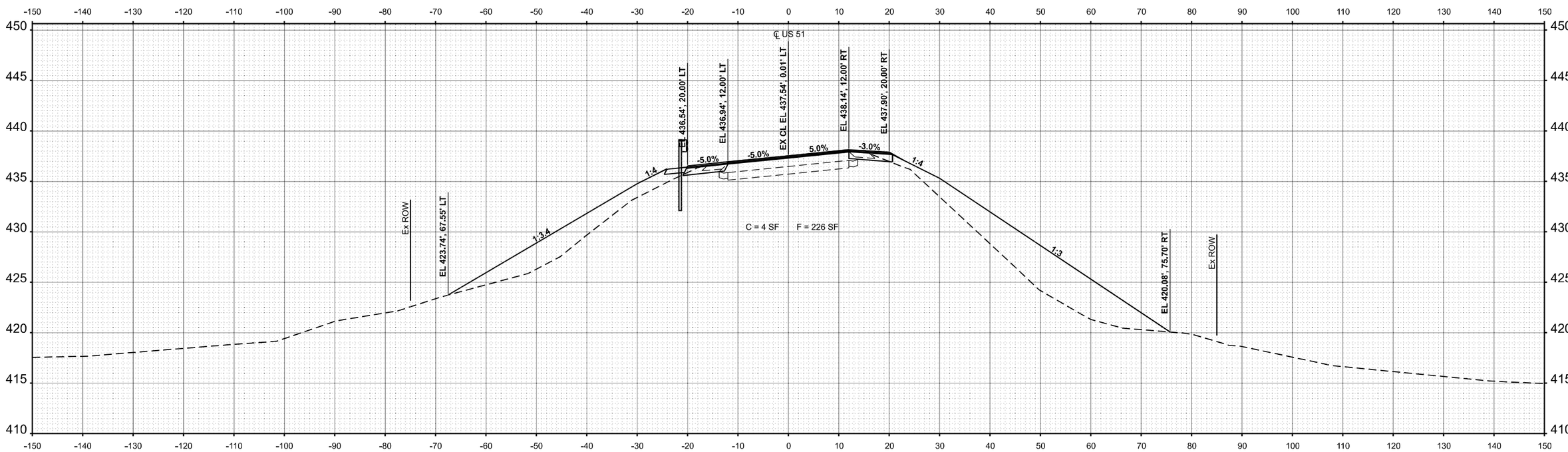

STA 435+00.00

FINAL SURVEY	BY	DATE
SURVEYED		
PLOTTED		
TEMPLATE		
AREAS		
AREAS CHECKED		
NOTE BOOK NO.		

ORIGINAL SURVEY	BY	DATE
SURVEYED		
PLOTTED		
TEMPLATE		
AREAS		
AREAS CHECKED		
NOTE BOOK NO.		

MODEL: Ex_US51 - 435+00.00 R2
FILE NAME: P:\2022\22019\A - US 51 over ICRR Bridge Replacement (Phase I)\4 CADD - DWG\4.7 Tran\CAD_Sheets\D978937-sht-XSEC.dgn

TWM ENGINEERING GEOSPATIAL SERVICES
TWM, INC.
WWW.TWM-INC.COM
IL DESIGN FIRM LICENSE NO: 184-001220

USER NAME = bbillhartz	DESIGNED - TBP	REVISED -	
	DRAWN - BAB	REVISED -	
PLOT SCALE = 19.99996000 ' / in.	CHECKED - SJK	REVISED -	
PLOT DATE = 8/21/2025	DATE - 5/2025	REVISED -	

STATE OF ILLINOIS
DEPARTMENT OF TRANSPORTATION

CROSS SECTIONS
US 51

SCALE: 1"=10' | SHEET 18 OF 21 SHEETS | STA. 435+00.00 TO STA. 435+50.00

F.A.P. RTE.	SECTION	COUNTY	TOTAL SHEETS	SHEET NO.
322	3VB-3	JACKSON	124	121

CONTRACT NO. 78937

ILLINOIS | FED. AID PROJECT

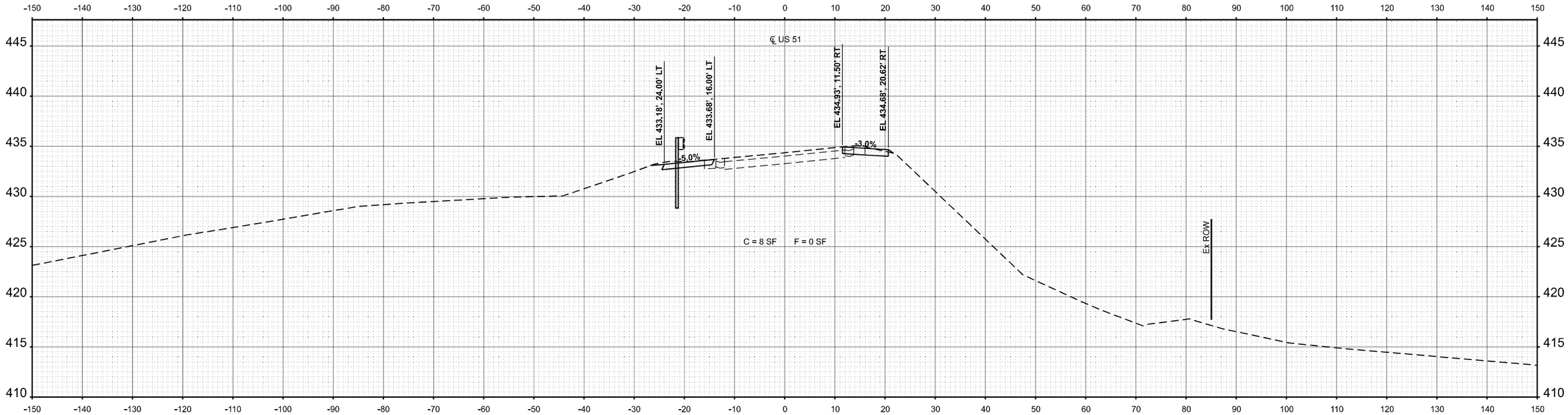

STA 436+50.00

END IMPROVEMENTS STA 436+12.03

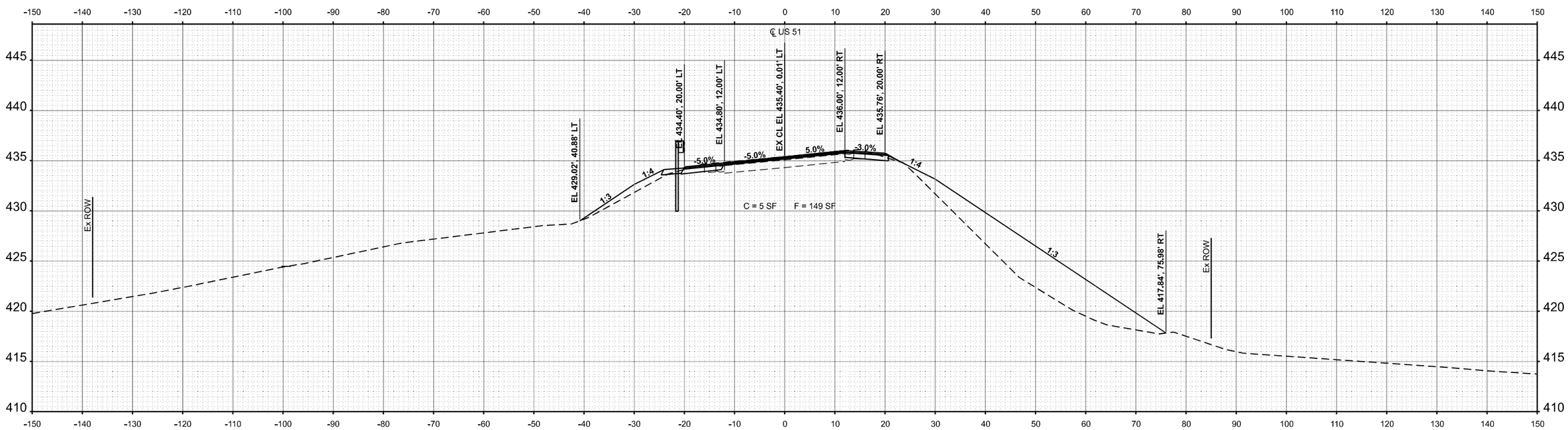

STA 436+00.00

FINAL SURVEY	SURVEYED	BY	DATE
NOTE BOOK	PLOTTED		
NO.	TEMPLATE		
	AREAS		
	AREAS CHECKED		

ORIGINAL SURVEY	SURVEYED	BY	DATE
NOTE BOOK	PLOTTED		
NO.	TEMPLATE		
	AREAS		
	AREAS CHECKED		

MODEL: Ex_US51 - 436+00.00 R2
FILE NAME: P:\2022\2019\7A - US 51 over ICRR Bridge Replacement (Phase I)\4 CADD - DVGN\4.7 Tran\CAD_Sheets\0978937-sht-XSEC.dgn

TWM ENGINEERING GEOSPATIAL SERVICES

TWM, INC.
WWW.TWM-INC.COM
IL DESIGN FIRM LICENSE NO. 184-001220

USER NAME = bbillhartz	DESIGNED - TBP	REVISED -	
	DRAWN - BAB	REVISED -	
PLOT SCALE = 19.99996000 ' / in.	CHECKED - SJK	REVISED -	
PLOT DATE = 8/21/2025	DATE - 5/2025	REVISED -	

STATE OF ILLINOIS
DEPARTMENT OF TRANSPORTATION

CROSS SECTIONS
US 51

SCALE: 1"=10' | SHEET 19 OF 21 SHEETS | STA. 436+00.00 TO STA. 436+50.00

F.A.P. RTE.	SECTION	COUNTY	TOTAL SHEETS	SHEET NO.
322	3VB-3	JACKSON	124	122

CONTRACT NO. 78937

ILLINOIS | FED. AID PROJECT

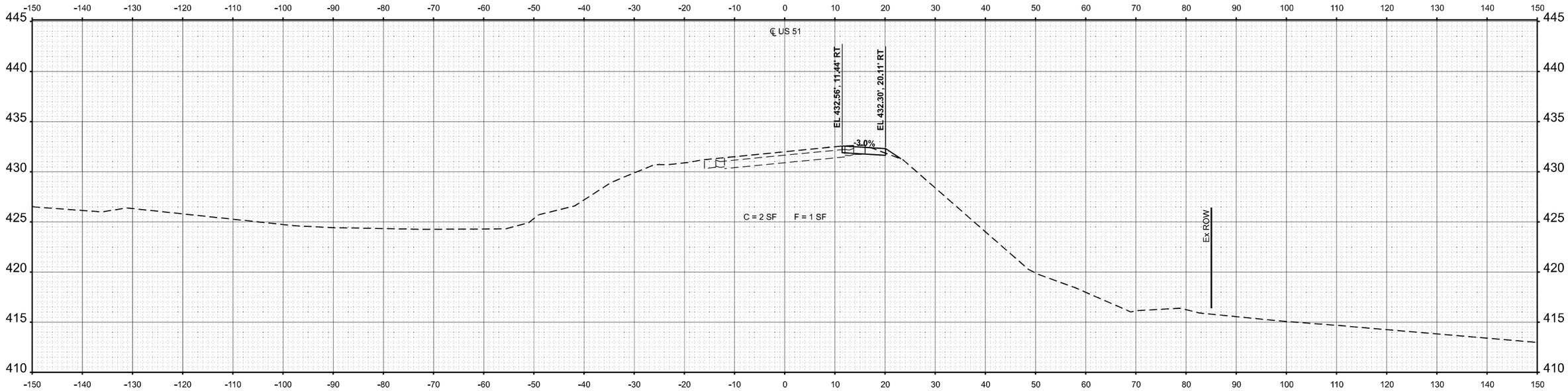

STA 437+50.00

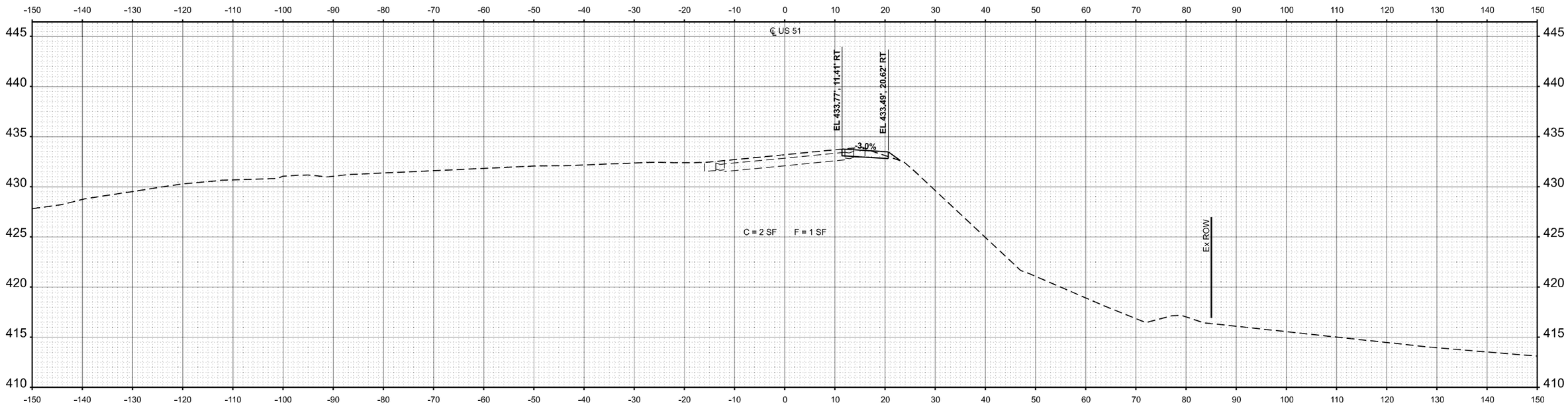

STA 437+00.00

FINAL SURVEY		BY	DATE
NOTE BOOK	SURVEYED		
	PLOTTED		
	TEMPLATE		
	AREAS		
NO.	AREAS CHECKED		

ORIGINAL SURVEY		BY	DATE
NOTE BOOK	SURVEYED		
	PLOTTED		
	TEMPLATE		
	AREAS		
NO.	AREAS CHECKED		

MODEL: Ex_US51 - 437+00.00 R2
FILE NAME: P:\2022\20197A - US 51 over ICRR Bridge Replacement (Phase I)\4 CADD - DIV\Gd.7 Tran\CAD_Sheets\D978937-sht-XSEC.dgn

TWM ENGINEERING GEOSPATIAL SERVICES

TWM, INC.
WWW.TWM-INC.COM
IL DESIGN FIRM LICENSE NO. 184-001220

USER NAME = bbillhartz	DESIGNED - TBP	REVISED -	
	DRAWN - BAB	REVISED -	
PLOT SCALE = 19.99996000 ' / in.	CHECKED - SJK	REVISED -	
PLOT DATE = 8/21/2025	DATE - 5/2025	REVISED -	

STATE OF ILLINOIS
DEPARTMENT OF TRANSPORTATION

CROSS SECTIONS
US 51

SCALE: 1"=10' | SHEET 20 OF 21 SHEETS | STA. 437+00.00 TO STA. 437+50.00

F.A.P. RTE.	SECTION	COUNTY	TOTAL SHEETS	SHEET NO.
322	3VB-3	JACKSON	124	123
		CONTRACT NO. 78937		
		ILLINOIS	FED. AID PROJECT	

FINAL SURVEY		BY	DATE
NOTE BOOK	SURVEYED		
	PLOTTED		
	TEMPLATE		
	AREAS		
NO.	AREAS CHECKED		

ORIGINAL SURVEY		BY	DATE
NOTE BOOK	SURVEYED		
	PLOTTED		
	TEMPLATE		
	AREAS		
NO.	AREAS CHECKED		

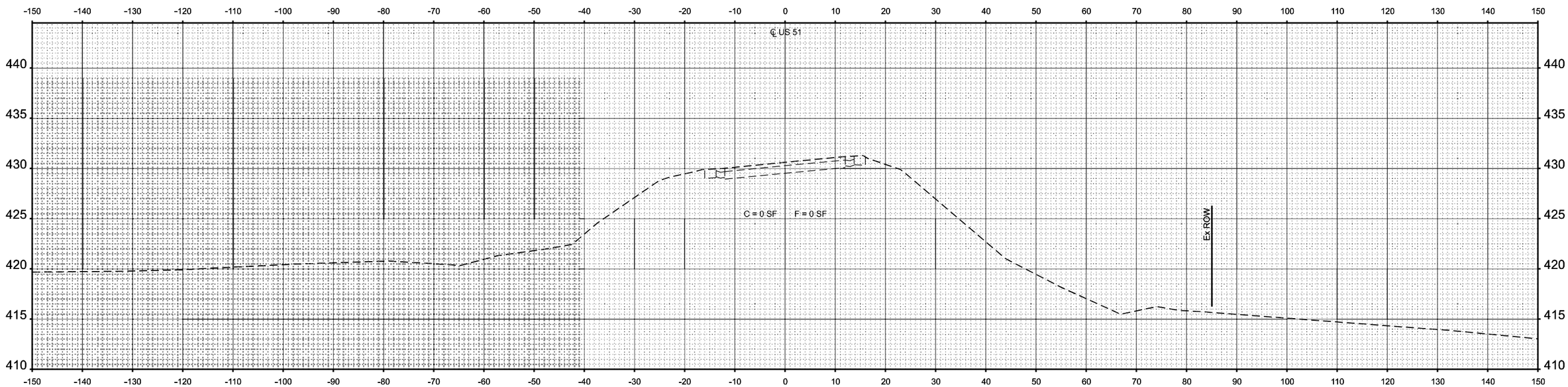

STA 438+00.00

MODEL: Ex_US51 - 438+00.00 R2
FILE NAME: P:\2022\22019\A - US 51 over ICRR Bridge Replacement (Phase I)\4 CADD - DWG\4.7 Tran\CAD_Sheets\D978937-sht-XSEC.dgn

TWM ENGINEERING & GEOSPATIAL SERVICES

TWM, INC.
WWW.TWM-INC.COM
IL DESIGN FIRM LICENSE NO: 184-001220

USER NAME = bbillhartz	DESIGNED - TBP	REVISED -	
	DRAWN - BAB	REVISED -	
PLOT SCALE = 19.99996000 ' / in.	CHECKED - SJK	REVISED -	
PLOT DATE = 8/21/2025	DATE - 5/2025	REVISED -	

STATE OF ILLINOIS
DEPARTMENT OF TRANSPORTATION

CROSS SECTIONS
US 51

SCALE: 1"=10' | SHEET 21 OF 21 SHEETS | STA. 438+00.00 | TO STA. 438+00.00

F.A.P. RTE.	SECTION	COUNTY	TOTAL SHEETS	SHEET NO.
322	3VB-3	JACKSON	124	124

CONTRACT NO. 78937

ILLINOIS | FED. AID PROJECT