01-16-2026 LETTING ITEM 134

F.A.P RTE.	SECTION	COUNTY	TOTAL SHEETS	SHEET NO.
600	(130-1, 130-2)RS-4	ST. CLAIR	36	1
	ILLINOIS	CONTRACT NO. 76U95		

FOR INDEX OF SHEETS, SEE SHEET NO. 2

STATE OF ILLINOIS
DEPARTMENT OF TRANSPORTATION

PROPOSED HIGHWAY PLANS

FAP ROUTE 600 (IL 159)
SECTION (130-1, 130-2)RS-4
PROJECT NHPP-REHD(912)
DESIGNED OVERLAY
ST. CLAIR COUNTY

C-98-052-26

D-98-020-26

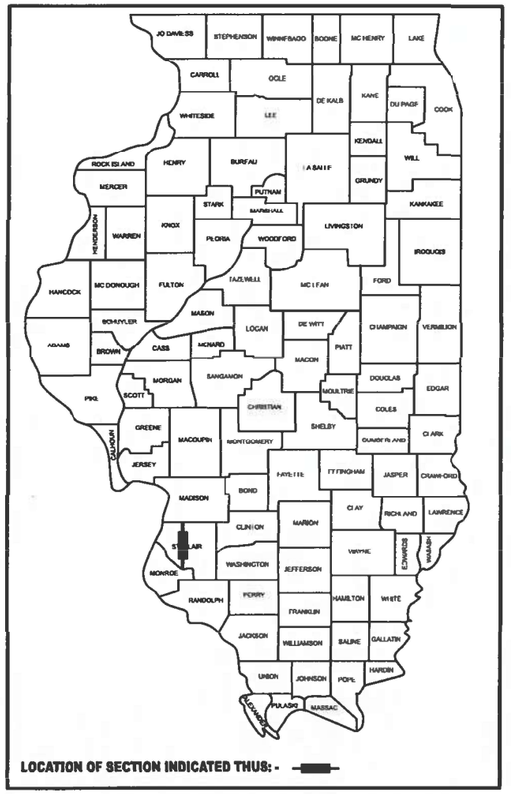

LOCATION OF SECTION INDICATED THUS: -

FUNCTIONAL CLASSIFICATION
OTHER PRINCIPAL ARTERIAL

TRAFFIC DATA

N OF LINCOLN TRAIL TO MARKET PL
2023 ADT = 27800 (ACTUAL)
2025 ADT = 28200 (ESTIMATED)
2045 ADT = 31200 (ESTIMATED)
S.U. = 1.4% M.U. = 0.5%

MARKET PL TO I–64
2023 ADT = 33900 (ACTUAL)
2025 ADT = 34400 (ESTIMATED)
2045 ADT = 38000 (ESTIMATED)
S.U. = 1.7% M.U. = 0.5%

I–64 TO 0.1 MILE N OF FOUNTAINS PKWY
2023 ADT = 20500 (ACTUAL)
2025 ADT = 20800 (ESTIMATED)
2045 ADT = 2300 (ESTIMATED)
S.U. = 2.2% M.U. = 1.5%

R 8 W

N

T 2 N

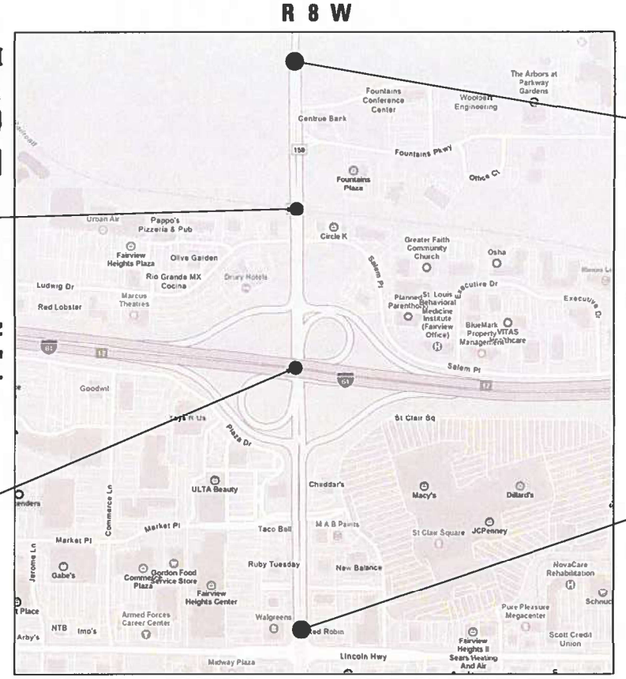

BRIDGE OMISSION
S.N. 082–0208
STA. 363 + 49 TO
STA. 365 + 73

BRIDGE OMISSION
S.N. 082–0176
STA. 350 + 44 TO
STA. 352 + 71

END PROJECT
0.1 MI N OF FOUNTAINS PKWY
STA. 376 + 69.28
LAT: 38.606024
LONG: –89.985085

BEGIN PROJECT
N OF LINCOLN TRAIL
STA. 330 + 32.00
LAT: 38.593304
LONG: –89.984905

GROSS LENGTH = 4637 FT. = 0.88 MILE
NET LENGTH = 4186 FT. = 0.79 MILE

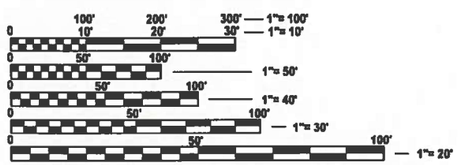

FULL SIZE PLANS HAVE BEEN PREPARED USING STANDARD ENGINEERING SCALES. REDUCED SIZED PLANS WILL NOT CONFORM TO STANDARD SCALES. IN MAKING MEASUREMENTS ON REDUCED PLANS, THE ABOVE SCALES MAY BE USED.

J.U.L.I.E.
JOINT UTILITY LOCATION INFORMATION FOR EXCAVATION
1-800-892-0123
OR 811

STATE OF ILLINOIS
DEPARTMENT OF TRANSPORTATION

SUBMITTED Oct 16 20 25
REGIONAL ENGINEER

December 5 20 25
ENGINEER OF DESIGN AND ENVIRONMENT

December 5 20 25
DIRECTOR OF HIGHWAYS, PROJECT IMPLEMENTATION

PROJECT ENGINEER: CHERYL KEPLAR
PROJECT MANAGER: BRANDON HUMPHREYS

CONTRACT NO. 76U95

PRINTED BY THE AUTHORITY OF THE STATE OF ILLINOIS

INDEX OF SHEETS

HIGHWAY STANDARDS

000001-09	STANDARD SYMBOLS, ABBREVIATION AND PATTERNS
001006	DECIMAL OF AN INCH AND OF A FOOT
420001-11	PAVEMENT JOINTS
420406	PAVEMENT CONNECTOR (HMA) FOR BRIDGE APPROACH SLAP
482011-03	HMA SHOULDER STRIPS/SHOULDER WITH RESURFACING OR WIDENING AND RESURFACING PROJECTS
601001-05	PIPE UNDERDRAINS
601101-02	CONRETE HEADWALL FOR PIPE UNDREDRAINS
630001-13	STEEL PLATE BEAM GUARDRAIL
630301-09	SHOULDER WIDENING FOR TYPE 1 (SPECIAL) GUARDRAIL TERMINALS
631031-18	TRAFFIC BARRIER TERMINAL, TYPE 6
701101-05	OFF-ROAD OPERATIONS, MULTILANE, 15' TO 24' FROM PAVEMENT EDGE
701106-02	OFF-ROAD OPERATIONS, MULTILANE, MORE THAN 15' AWAY
701411-09	LANE CLOSURE, MULTILANE, AT ENTRANCE OR EXIT RAMP, FOR SPEEDS ≥ 45MPH
701426-09	LANE CLOSURE, MULTILANE, INTERMITTENT OR MOVING OPERATIONS FOR SPEED ≥ 45 MPH
701427-05	LANE CLOSURE, MULTILANE, INTERMITTENT OR MOVING OPERATION, FOR SPEEDS ≤ 40 MPH
701456-05	PARTIAL EXIT RAMP CLOSURE, FREEWAY/EXPRESSWAY
701601-09	URBAN LANE CLOSURE, MULTILANE, 1W OR 2W WITH NONTRAVERSABLE MEDIAN
701701-10	URBAN LANE CLOSURE, MULTILANE INTERSECTION
701901-11	TRAFFIC CONTROL DEVICES
725001-01	OBJECT AND TERMINAL MARKERS
780001-05	TYPICAL PAVEMENT MARKINGS
781001-04	TYPICAL APPLICATIONS RAISED REFLECTIVE PAVEMENT MARKERS
782001-01	CURB REFLECTORS
782006-01	GUARDRAIL AND BARRIER WALL REFLECTOR MOUNTING DETAILS
886001-01	DETECTOR LOOP INSTALLATIONS
886006-01	TYPICAL LAYOUT FOR DETECTOR LOOPS

GENERAL NOTES

1. UTILITIES KNOWN TO HAVE FACILITIES WITHIN THE PROJECT AREA:

   AMEREN ILLINOIS
   AT&T ILLINOIS
   BUCKEYE PARTNERS L.P.--WOOK RIVER PIPELINE
   CASEYVILLE TOWNSHIP ADVANCED WASTEWATER TREATMENT SYSTEM
   CHARTER COMMUNICATIONS, INC.
   CLEARWAVE FIBER LLC
   EXTENET SYSTEMS, INC
   CITY OF FAIRVIEW HEIGHTS
   FIDELITY COMMUNICATIONS III, INC
   I3 BROADBAND
   LEVEL 3 COMMUNICATIONS
   CITY OF O'FALLON
   SEGRA
   VERIZON BUSINESS

2. THE PROPOSED PAVEMENT MARKING SHALL MATCH THE PAVEMENT MARKING PLAN, OR AS DIRECTED BY THE ENGINEER.

3. THE RESIDENT ENGINEER SHALL VERIFY THE EXISTENCE OF HIGHWAY LIGHTING, INTELLIGENT TRANSPORTATION SYSTEMS (I.T.S.) UTILITIES, AND/OR ELECTRICAL CABLES ASSOCIATED WITH TRAFFIC SIGNALS WITHIN THE PROJECT LIMITS. IF ANY OF THESE EXIST WITHIN THE PROJECT LIMITS, AND IF THESE ITEMS REQUIRE LOCATING, THE CONTRACTOR SHALL BE DIRECTED TO DO SO ACCORDING TO SECTION 803 OF THE STANDARD SPECIFICATIONS. THIS WORK SHALL BE PAID FOR ACCORDING TO ARTICLE 109.04 OF THE STANDARD SPECIFICATIONS.

4. SIX CHANGEABLE MESSAGE SIGNS SHALL BE REQUIRED FOR THIS PROJECT. THEY SHALL BE PLACED TWO WEEKS PRIOR TO ANY LANE CLOSURE AND SHALL REMAIN UP FOR THE DURATION OF THE PROJECT. THE CHANGEABLE MESSAGE SIGNS SHALL BE PLACED ALONG IL 159 OR AT THE DIRECTION OF THE ENGINEER.

5. THE CONTRACTOR SHALL PROVIDE POSITIVE AND ADEQUATE DRAINAGE AT ALL TIMES.

6. THE DEPARTMENT STRONGLY ENCOURAGES THE PRIME CONTRACTOR AND THEIR APPROVED SUB-CONTRACTORS TO HIRE MINORITY, WOMEN AND DISADVANTAGED INDIVIDUALS FROM ITS FEDERALLY FUNDED HIGHWAY CONSTRUCTION CAREERS TRAINING PROGRAM (HCCTP) TO HELP MEET WORKFORCE AND TRAINEE GOALS. THIS PROGRAM IS TRAINING MINORITIES, WOMEN AND DISADVANTAGED INDIVIDUALS IN HIGHWAY CONSTRUCTION-RELATED SKILLS, E.G., MATH FOR THE TRADES, JOB READINESS, TECHNICAL SKILLS COURSEWORK (CARPENTRY, CONCRETE FLATWORK, BLUEPRINT READING, SITE PLANS, SITE WORK, TOOLS USE, ETC.) AND OSHA 10 HOUR CERTIFICATION, TO PREPARE THEM FOR A CAREER IN THE HIGHWAY CONSTRUCTION TRADES. GRADUATES ARE WELL-TRAINED AND READY TO BECOME PRODUCTIVE ENTRY-LEVEL CONSTRUCTION WORKERS. CONTACT THE DISTRICT 8 EEO OFFICE AT 618-346-3360 AND/OR THE HCCTP COORDINATOR AT 618-874-6528 TO LEARN MORE ABOUT THE PROGRAM AND FOR ASSISTANCE IN MEETING WORKFORCE AND TRAINEE GOALS.

7. THE INTENT OF THE MILLING IS TO REMOVE THE HMA RESURFACING ONLY. THE UNDERLYING CONCRETE PAVEMENT SHALL NOT BE DISTURBED.

8. ONLY SHORT TERM PAVEMENT MARKING REMOVAL FROM THE FINAL SURFACE SHALL BE PAID FOR AS "SHORT TERM PAVEMENT MARKING REMOVAL."

9. THE TEMPORARY RAMPS USED ON ALL SIDE STREETS AND ENTRANCES SHALL BE 3 FEET IN LENGTH SO AS NOT TO INTERFERE WITH THE THRU TRAFFIC LANES.

10. THE CONTRACTOR SHALL PROVIDE POSITIVE AND ADEQUATE DRAINAGE AT ALL TIMES.

11. THE CONTRACTOR SHALL BE AWARE THAT THERE ARE MANHOLES & VALVES LOCATED WITHIN THE RESURFACING LIMITS. CARE SHALL BE TAKEN IN THESE LOCATIONS DURING MILLING OPERATIONS.

12. BASED ON STRUCTURAL ANALYSIS CONDUCTED BY IDOT, THE FOLLOWING STRUCTURES CAN BE CROSSED WITH AN EMPTY MTD WITH THE FOLLOWING MAXIMUM GROSS WEIGHT RESTRICTION:

    - 082-0176 (40 TONS)
    - 082-0208 (40 TONS)

    IF THE SAME MTD IS USED THROUGHOUT THE ENTIRE CONTRACT, THEN IT MUST BE LIMITED TO AN EMPTY GROSS WEIGHT ≤ 40 TONS

COMMITMENTS

NONE

MIXTURE REQUIREMENTS

	MAINLINE		TURN LANES < 500 FEET	
MIXTURE USE	POLY BINDER	POLY SURFACE	POLY BINDER	POLY SURFACE
AC/PG	SBS PG 70-28	SBS PG 70-28	SBS PG 70-28	SBS PG 70-28
DESIGN AIR VOIDS	4.0% @ Ndes=90	4.0% @ Ndes=90	4.0% @ Ndes=90	4.0% @ Ndes=90
MIX COMPOSITION (GRADATION)	IL 19.0	IL 9.5	IL 19.0	IL 9.5
FRICTION AGG	MIXTURE "B"	MIXTURE "E"	MIXTURE "B"	MIXTURE "E"
QUALITY MGMT PROGRAM	QCP	QCP	QC/QA	QC/QA
MatTranDev Required?	YES	YES	NO	NO

	SHOULDER ≤ 8 FEET WIDE			
MIXTURE USE	SHOULDER (lower)	SHOULDER (surface)		
AC/PG	PG 64-22	PG 64-22		
DESIGN AIR VOIDS	4.0% @ Ndes=30	4.0% @ Ndes=30		
MIX COMPOSITION (GRADATION)	IL 19.0L	IL 9.5L		
FRICTION AGG				
QUALITY MGMT PROGRAM	QC/QA	QC/QA		
MatTranDev Required?	NO	NO		

CODE NO.	ITEM	UNIT	TOTAL QUANTITY	CONSTR. CODE 80% FED 20% STATE ROADWAY 0005 URBAN
40600290	BITUMINOUS MATERIALS (TACK COAT)	POUND	31690	31690
40600370	LONGITUDINAL JOINT SEALANT	FOOT	19274	19274
40600405	MATERIAL TRANSFER DEVICE	TON	7834	7834
40600990	TEMPORARY RAMP	SQ YD	1154	1154
40603240	POLYMERIZED HOT-MIX ASPHALT BINDER COURSE, IL-19.0, N90	TON	5786	5786
40604174	POLYMERIZED HOT-MIX ASPHALT SURFACE COURSE, IL-9.5, MIX "E", N90	TON	3471	3471
44000165	HOT-MIX ASPHALT SURFACE REMOVAL, 4"	SQ YD	48547	48547
44000500	COMBINATION CURB AND GUTTER REMOVAL	FOOT	80	80
48203100	HOT-MIX ASPHALT SHOULDERS	TON	1209	1209
60100060	CONCRETE HEADWALLS FOR PIPE DRAINS	EACH	1	1
60100070	SHOULDER REMOVAL AND REPLACEMENT	FOOT	480	480
60108100	PIPE UNDERDRAINS 4" (SPECIAL)	FOOT	20	20
60108104	PIPE UNDERDRAINS, TYPE 1, 4"	FOOT	480	480
60608600	COMBINATION CONCRETE CURB AND GUTTER, TYPE M-6.06	FOOT	80	80

	CODE NO.	ITEM	UNIT	TOTAL QUANTITY	CONSTR. CODE 80% FED 20% STATE ROADWAY 0005 URBAN
	60619200	CONCRETE MEDIAN, TYPE SB-6.06	SQ FT	75	75
*	63000003	STEEL PLATE BEAM GUARDRAIL, TYPE A, 9 FOOT POSTS	FOOT	650	650
*	63100085	TRAFFIC BARRIER TERMINAL, TYPE 6	EACH	8	8
*	63100167	TRAFFIC BARRIER TERMINAL, TYPE 1 (SPECIAL) TANGENT	EACH	8	8
	63200310	GUARDRAIL REMOVAL	FOOT	1323	1323
	67000400	ENGINEER'S FIELD OFFICE, TYPE A	CAL MO	12	12
	67100100	MOBILIZATION	L SUM	1	1
	70100420	TRAFFIC CONTROL AND PROTECTION, STANDARD 701411	EACH	5	5
	70100825	TRAFFIC CONTROL AND PROTECTION, STANDARD 701456	L SUM	1	1
	70102630	TRAFFIC CONTROL AND PROTECTION, STANDARD 701601	L SUM	1	1
	70102635	TRAFFIC CONTROL AND PROTECTION, STANDARD 701701	L SUM	1	1
	70103815	TRAFFIC CONTROL SURVEILLANCE	CAL DA	7	7
	70107025	CHANGEABLE MESSAGE SIGN	CAL DA	504	504

* SPECIALTY ITEM

REV - MS

CODE NO.	ITEM	UNIT	TOTAL QUANTITY	CONSTR. CODE 80% FED 20% STATE ROADWAY 0005 URBAN
70200100	NIGHTTIME WORK ZONE LIGHTING	L SUM	1	1
70300100	SHORT TERM PAVEMENT MARKING	FOOT	3010	3010
70300150	SHORT TERM PAVEMENT MARKING REMOVAL	SQ FT	1018	1018
70300211	TEMPORARY PAVEMENT MARKING LETTERS AND SYMBOLS - PAINT	SQ FT	1070	1070
70300241	TEMPORARY PAVEMENT MARKING - LINE 6"- PAINT	FOOT	26285	26285
70300251	TEMPORARY PAVEMENT MARKING - LINE 8"- PAINT	FOOT	1086	1086
70300261	TEMPORARY PAVEMENT MARKING - LINE 12"- PAINT	FOOT	1228	1228
70300281	TEMPORARY PAVEMENT MARKING - LINE 24"- PAINT	FOOT	731	731
* 72000100	SIGN PANEL - TYPE 1	SQ FT	20	20
* 72501000	TERMINAL MARKER - DIRECT APPLIED	EACH	8	8
* 78000100	THERMOPLASTIC PAVEMENT MARKING - LETTERS AND SYMBOLS	SQ FT	1070	1070
* 78000400	THERMOPLASTIC PAVEMENT MARKING - LINE 6"	FOOT	26285	26285
* 78000500	THERMOPLASTIC PAVEMENT MARKING - LINE 8"	FOOT	1086	1086
* 78000600	THERMOPLASTIC PAVEMENT MARKING - LINE 12"	FOOT	1228	1228

* SPECIALTY ITEM

	CODE NO.	ITEM	UNIT	TOTAL QUANTITY	CONSTR. CODE 80% FED 20% STATE ROADWAY 0005 URBAN
*	78000650	THERMOPLASTIC PAVEMENT MARKING - LINE 24"	FOOT	731	731
*	78100100	RAISED REFLECTIVE PAVEMENT MARKER	EACH	260	260
*	78200005	GUARDRAIL REFLECTORS, TYPE A	EACH	17	17
*	78200020	CURB REFLECTORS	EACH	342	342
	78300200	RAISED REFLECTIVE PAVEMENT MARKER REMOVAL	EACH	260	260
	78300202	PAVEMENT MARKING REMOVAL - WATER BLASTING	SQ FT	17592	17592
	X4403300	CONCRETE MEDIAN REMOVAL	SQ FT	75	75
*	X8860105	DETECTOR LOOP REPLACEMENT	FOOT	7520	7520
*	Z0036200	PAINT CURB	FOOT	1261	1261
Ø	Z0076600	TRAINEES	HOUR	1500	1500
Ø	Z0076604	TRAINEES TRAINING PROGRAM GRADUATE	HOUR	1500	1500

* SPECIALTY ITEM

Ø 0042

REV - MS

MODEL: SOQ-4 [Sheet]
FILE NAME: c:\pw_work\pwidot\illinois.gov_edison.zohfonyi@illinois.gov\d1157876\D876U95-sht-SOQ.dgn

USER NAME = edison.zohfonyi	DESIGNED -	REVISED -	
	DRAWN -	REVISED -	
	CHECKED -	REVISED -	
PLOT DATE = 10/15/2025	DATE -	REVISED -	

STATE OF ILLINOIS
DEPARTMENT OF TRANSPORTATION

SUMMARY OF QUANTITY

SCALE: | SHEET 4 OF 4 SHEETS | STA. TO STA.

F.A.P RTE.	SECTION	COUNTY	TOTAL SHEETS	SHEET NO.
600	(130-1, 130-2)RS-4	ST. CLAIR	36	6

CONTRACT NO. 76U95

ILLINOIS | FED. AID PROJECT

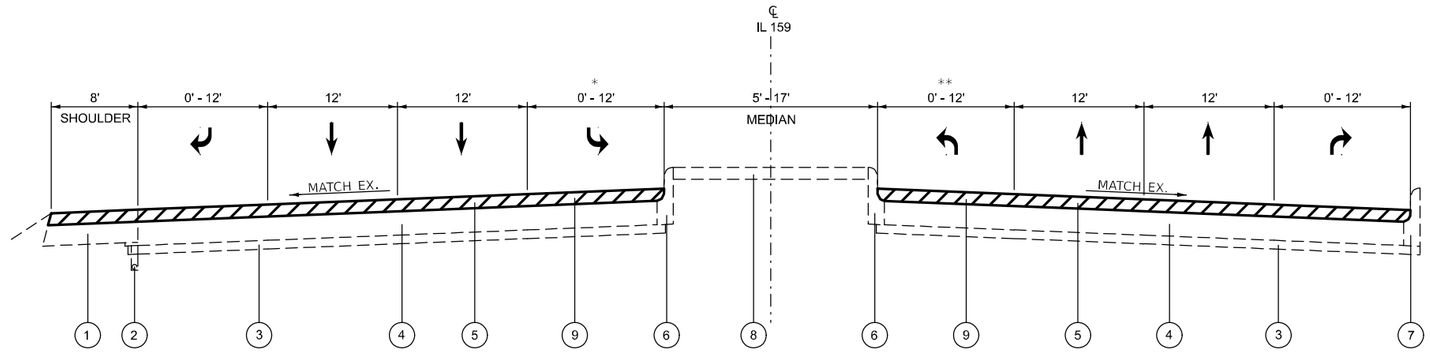

EXISTING TYPICAL SECTION

STA. 330+32 TO STA. 340+05

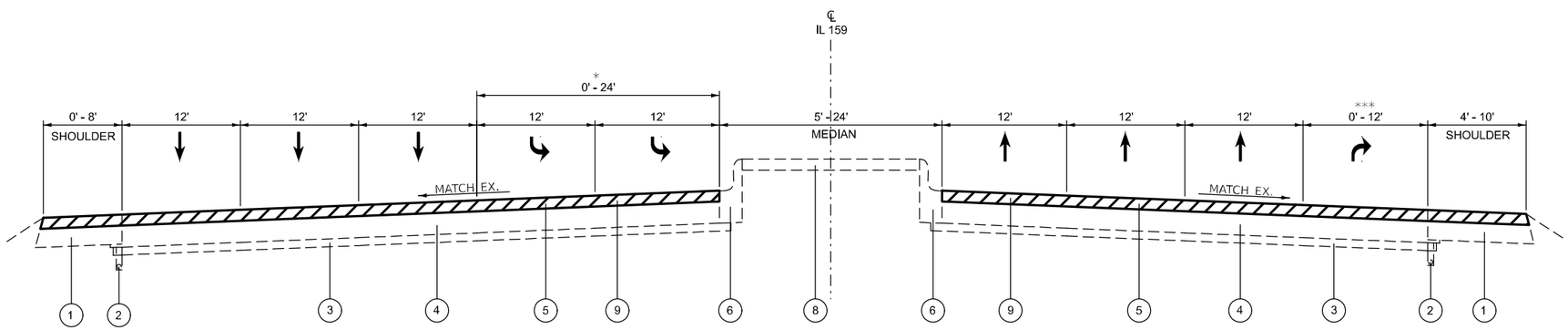

EXISTING TYPICAL SECTION

STA. 340+05 TO STA. 344+72

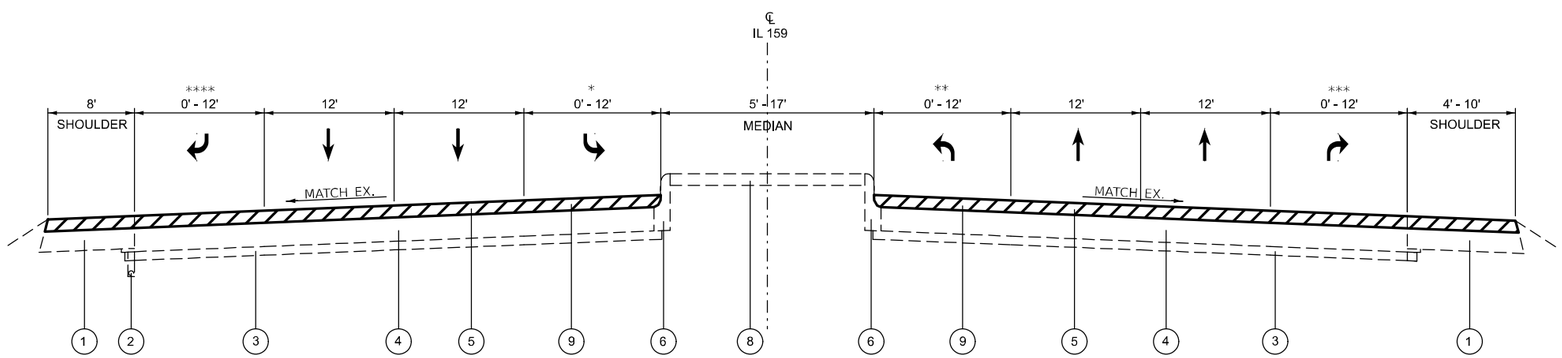

EXISTING TYPICAL SECTION

STA. 344+72 TO STA. 350+44
STA. 350+44 TO STA. 352+71 (BRIDGE OMISSION)
STA. 352+71 TO STA. 363+49
STA. 363+49 TO STA. 365+73 (BRIDGE OMISSION)
STA. 365+73 TO STA. 376+69.28

LEGEND

1. EXISTING BITUMINOUS SHOULDERS, 8"
2. EXISTING PIPE UNDERDRAINS
3. EXISTING 4" SUB-BASE GRANULAR MATERIAL
4. EXISTING PCC BASE COURSE, 8"
5. EXISTING BITUMINOUS OVERLAY, 4"
6. EXISTING CONCRETE C&G, TYPE B-9.25
7. EXISTING CONCRETE C&G, TYPE B-6.24
8. EXISTING CONCRETE MEDIAN SURFACE
9. PROPOSED HMA SURFACE REMOVAL, 4"
10. PROPOSED HMA SHOULDER, 2½"
11. PROPOSED BITUMINOUS MATERIAL (TACK COAT)
12. PROPOSED LONGITUDINAL JOINT SEALANT
13. PROPOSED HMA BINDER COURSE, 2½"
14. PROPOSED HMA SURFACE COURSE, 1½"
15. PROPOSED HMA SHOULDER, 1½"
16. PROPOSED PIPE UNDERDRAINS 4"
17. PROPOSED CONCRETE MEDIAN
18. PROPOSED CONCRETE C&G, TYPE M-6.06
19. PROPOSED CONCRETE MEDIAN REMOVAL

* FROM STA. 330+32.00 TO STA. 332+48.00
FROM STA. 334+44.00 TO STA. 338+65.00
FROM STA. 340+05.00 TO STA. 344+40.00
FROM STA. 345+60.00 TO STA. 350+70.00
FROM STA. 362+46.00 TO STA. 363+78.00
FROM STA. 371+27.00 TO STA. 374+84.00

** FROM STA. 331+25.00 TO STA. 333.53.00
FROM STA. 336+15.00 TO STA. 339+05.00
FROM STA. 356+25.00 TO STA. 361+46.00

*** FROM STA. 340+44.00 TO STA. 345+20.00
FROM STA. 345+20.00 TO STA. 354+12.00
FROM STA. 357+92.00 TO STA. 361+46.00
FROM STA. 365+73.00 TO STA. 370+02.00

**** FROM STA. 348.92.00 TO STA. 350+44.00
FROM STA. 352+71.00 TO STA. 356+37.00
FROM STA. 357+04.00 TO STA. 361+17.00

MODEL: Typical Section-10 [Sheet]
FILE NAME: c:\pw_work\pwidot\illinois.gov_edison.zohfonyi@illinois.gov\d1157876\D876U95-sht-typical.dgn

USER NAME = edison.zohfonyi	DESIGNED -	REVISED -	STATE OF ILLINOIS DEPARTMENT OF TRANSPORTATION	TYPICAL SECTIONS	F.A.P RTE.	SECTION	COUNTY	TOTAL SHEETS	SHEET NO.
	DRAWN -	REVISED -			600	(130-1, 130-2)RS-4	ST. CLAIR	36	7
	CHECKED -	REVISED -					CONTRACT NO. 76U95		
PLOT DATE = 10/15/2025	DATE -	REVISED -		SCALE: SHEET 1 OF 6 SHEETS STA. TO STA.		ILLINOIS	FED. AID PROJECT		

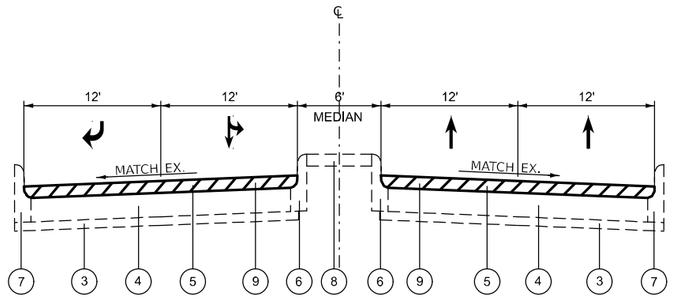

EXISTING TYPICAL SECTION
DICK'S ENTRANCE

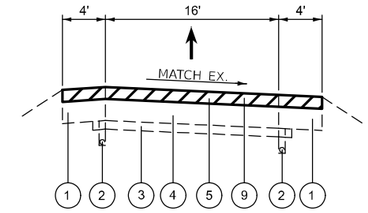

EXISTING TYPICAL SECTION
RAMP C

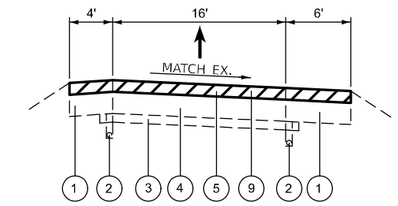

EXISTING TYPICAL SECTION
RAMP A, D, & E

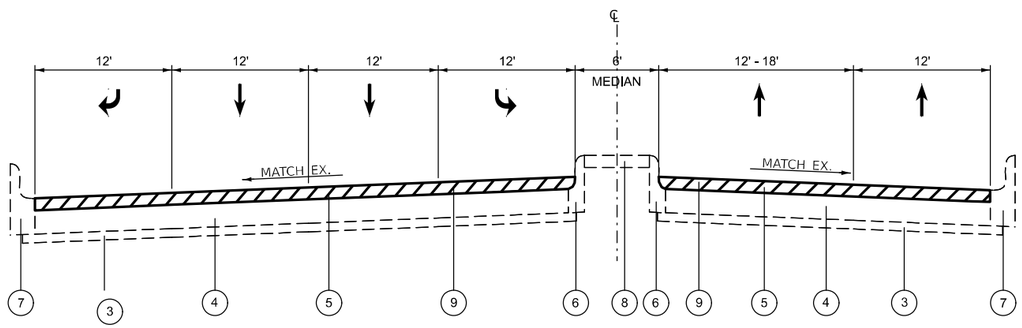

EXISTING TYPICAL SECTION
MARKET PL

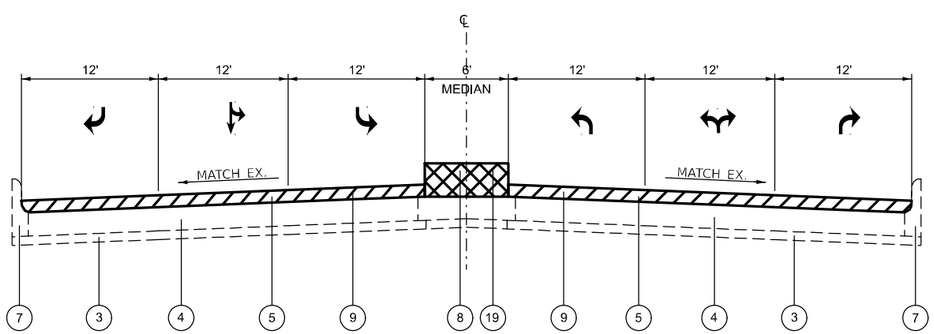

EXISTING TYPICAL SECTION
ST. CLAIR SQUARE

LEGEND

1. EXISTING BITUMINOUS SHOULDERS, 8"
2. EXISTING PIPE UNDERDRAINS
3. EXISTING 4" SUB-BASE GRANULAR MATERIAL
4. EXISTING PCC BASE COURSE, 8"
5. EXISTING BITUMINOUS OVERLAY, 4"
6. EXISTING CONCRETE C&G, TYPE B-9.25
7. EXISTING CONCRETE C&G, TYPE B-6.24
8. EXISTING CONCRETE MEDIAN SURFACE
9. PROPOSED HMA SURFACE REMOVAL, 4"
10. PROPOSED HMA SHOULDER, 2½"
11. PROPOSED BITUMINOUS MATERIAL (TACK COAT)
12. PROPOSED LONGITUDINAL JOINT SEALANT
13. PROPOSED HMA BINDER COURSE, 2½"
14. PROPOSED HMA SURFACE COURSE, 1½"
15. PROPOSED HMA SHOULDER, 1½"
16. PROPOSED PIPE UNDERDRAINS 4"
17. PROPOSED CONCRETE MEDIAN
18. PROPOSED CONCRETE C&G, TYPE M-6.06
19. PROPOSED CONCRETE MEDIAN REMOVAL

MODEL: Typical Section-11 [Sheet]
FILE NAME: c:\pw_work\pwidot\illinois.gov_edison.zohfonyi@illinois.gov\d1157876\D876U95-sht-typical.dgn

USER NAME = edison.zohfonyi	DESIGNED -	REVISED -	STATE OF ILLINOIS DEPARTMENT OF TRANSPORTATION
	DRAWN -	REVISED -	
	CHECKED -	REVISED -	
PLOT DATE = 10/15/2025	DATE -	REVISED -	

TYPICAL SECTIONS

SCALE: | SHEET 2 OF 6 SHEETS | STA. | TO STA.

F.A.P RTE.	SECTION	COUNTY	TOTAL SHEETS	SHEET NO.
600	(130-1, 130-2)RS-4	ST. CLAIR	36	8
		CONTRACT NO. 76U95		
		ILLINOIS	FED. AID PROJECT	

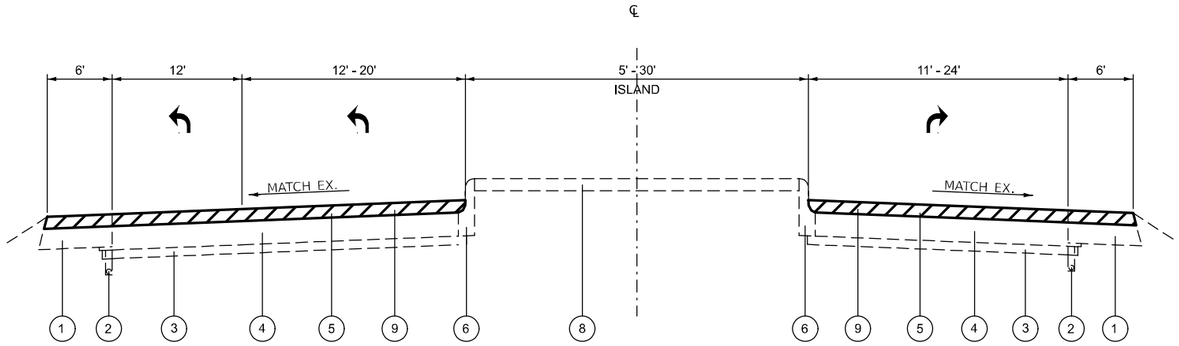

EXISTING TYPICAL SECTION
RAMP F

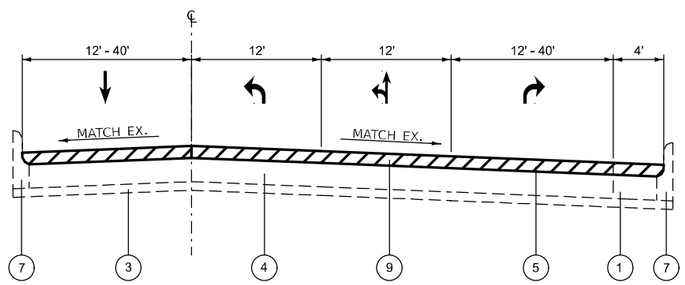

EXISTING TYPICAL SECTION
LUDWIG DR

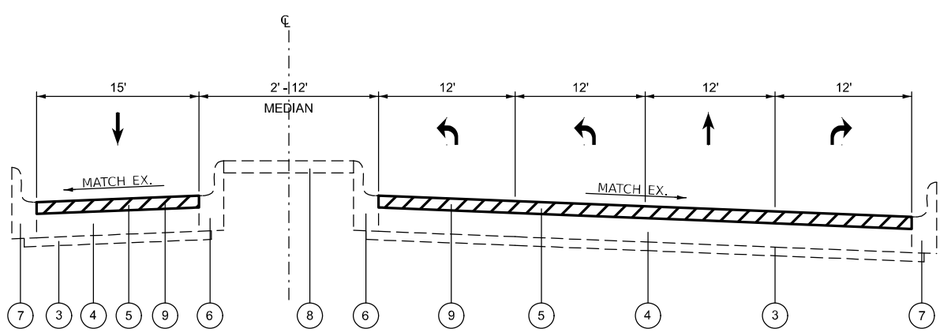

EXISTING TYPICAL SECTION
FOUNTAINS PKWY

LEGEND

1. EXISTING BITUMINOUS SHOULDERS, 8"
2. EXISTING PIPE UNDERDRAINS
3. EXISTING 4" SUB-BASE GRANULAR MATERIAL
4. EXISTING PCC BASE COURSE, 8"
5. EXISTING BITUMINOUS OVERLAY, 4"
6. EXISTING CONCRETE C&G, TYPE B-9.25
7. EXISTING CONCRETE C&G, TYPE B-6.24
8. EXISTING CONCRETE MEDIAN SURFACE
9. PROPOSED HMA SURFACE REMOVAL, 4"
10. PROPOSED HMA SHOULDER, 2½"
11. PROPOSED BITUMINOUS MATERIAL (TACK COAT)
12. PROPOSED LONGITUDINAL JOINT SEALANT
13. PROPOSED HMA BINDER COURSE, 2½"
14. PROPOSED HMA SURFACE COURSE, 1½"
15. PROPOSED HMA SHOULDER, 1½"
16. PROPOSED PIPE UNDERDRAINS 4"
17. PROPOSED CONCRETE MEDIAN
18. PROPOSED CONCRETE C&G, TYPE M-6.06
19. PROPOSED CONCRETE MEDIAN REMOVAL

MODEL: Typical Section-12 [Sheet]
FILE NAME: c:\pw_work\pwidot\illinois.gov_edison.zohfonyi@illinois.gov\d1157876\D876U95-sht-typical.dgn

USER NAME = edison.zohfonyi	DESIGNED -	REVISED -	
	DRAWN -	REVISED -	
	CHECKED -	REVISED -	
PLOT DATE = 10/15/2025	DATE -	REVISED -	

STATE OF ILLINOIS
DEPARTMENT OF TRANSPORTATION

TYPICAL SECTIONS

SCALE: | SHEET 3 OF 6 SHEETS | STA. | TO STA.

F.A.P RTE.	SECTION	COUNTY	TOTAL SHEETS	SHEET NO.
600	(130-1, 130-2)RS-4	ST. CLAIR	36	9
		CONTRACT NO. 76U95		
		ILLINOIS	FED. AID PROJECT	

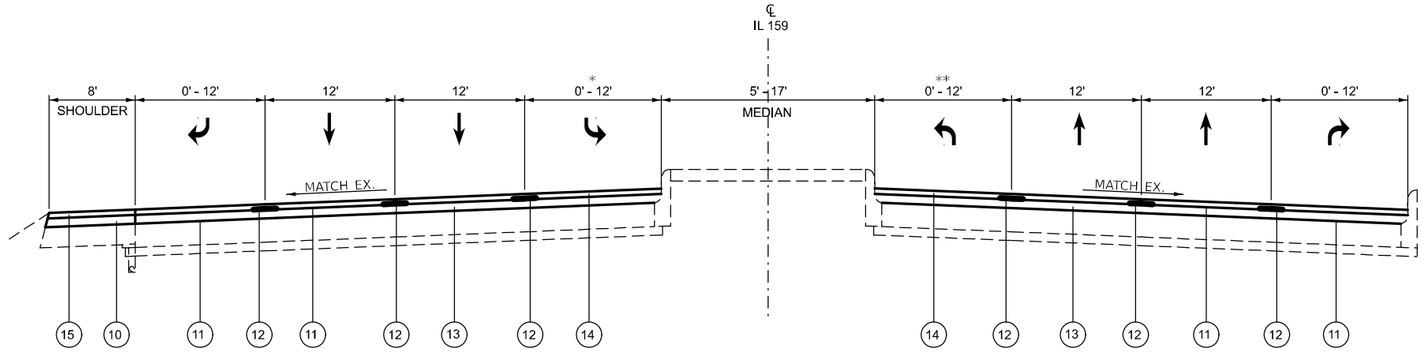

PROPOSED TYPICAL SECTION

STA. 330+32 TO STA. 340+05

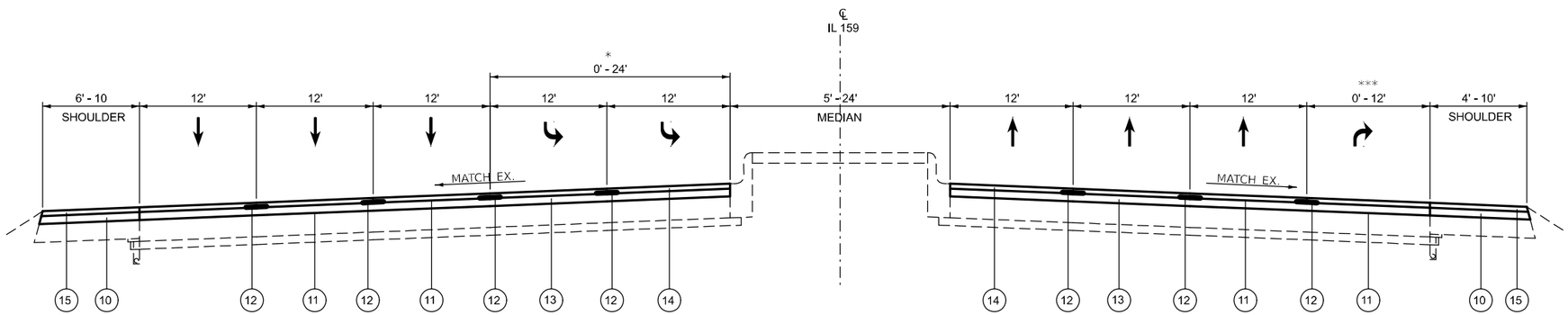

PROPOSED TYPICAL SECTION

STA. 340+05 TO STA. 344+72

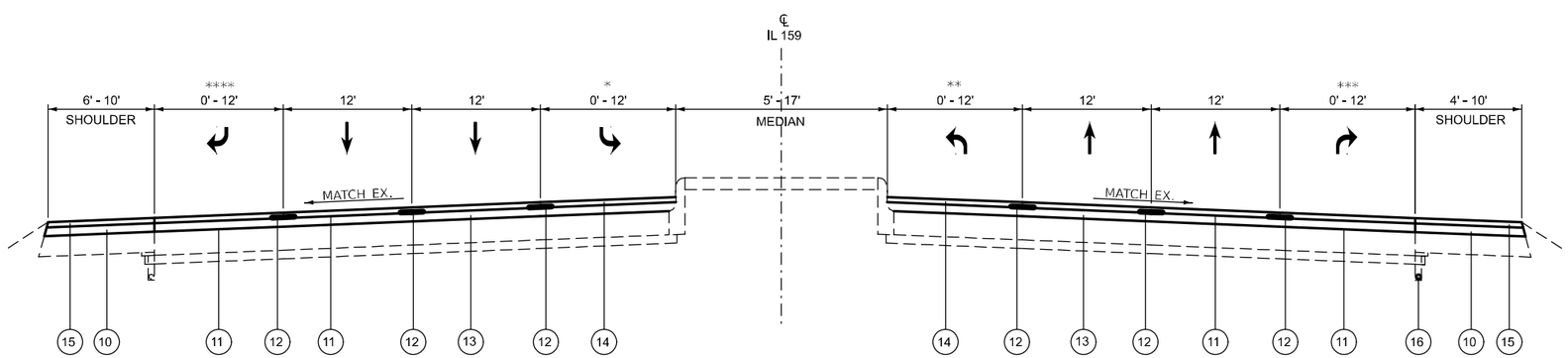

PROPOSED TYPICAL SECTION

STA. 344+72 TO STA. 350+70
STA. 350+70 TO STA. 352+98 (BRIDGE OMISSION)
STA. 352+98 TO STA. 363+78
STA. 363+78 TO STA. 366+02 (BRIDGE OMISSION)
STA. 366+02 TO STA. 376+69.28

LEGEND

1. EXISTING BITUMINOUS SHOULDERS, 8"
2. EXISTING PIPE UNDERDRAINS
3. EXISTING 4" SUB-BASE GRANULAR MATERIAL
4. EXISTING PCC BASE COURSE, 8"
5. EXISTING BITUMINOUS OVERLAY, 4"
6. EXISTING CONCRETE C&G, TYPE B-9.25
7. EXISTING CONCRETE C&G, TYPE B-6.24
8. EXISTING CONCRETE MEDIAN SURFACE
9. PROPOSED HMA SURFACE REMOVAL, 4"
10. PROPOSED HMA SHOULDER, 2½"
11. PROPOSED BITUMINOUS MATERIAL (TACK COAT)
12. PROPOSED LONGITUDINAL JOINT SEALANT
13. PROPOSED HMA BINDER COURSE, 2½"
14. PROPOSED HMA SURFACE COURSE, 1½"
15. PROPOSED HMA SHOULDER, 1½"
16. PROPOSED PIPE UNDERDRAINS 4"
17. PROPOSED CONCRETE MEDIAN
18. PROPOSED CONCRETE C&G, TYPE M-6.06
19. PROPOSED CONCRETE MEDIAN REMOVAL

* FROM STA. 330+32.00 TO STA. 332+48.00
FROM STA. 334+44.00 TO STA. 338+65.00
FROM STA. 340+05.00 TO STA. 344+40.00
FROM STA. 345+60.00 TO STA. 350+70.00
FROM STA. 362+46.00 TO STA. 363+78.00
FROM STA. 371+27.00 TO STA. 374+84.00

** FROM STA. 331+25.00 TO STA. 333.53.00
FROM STA. 336+15.00 TO STA. 339+05.00
FROM STA. 356+25.00 TO STA. 361+46.00

*** FROM STA. 340+44.00 TO STA. 345+20.00
FROM STA. 345+20.00 TO STA. 354+12.00
FROM STA. 357+92.00 TO STA. 361+46.00
FROM STA. 365+73.00 TO STA. 370+02.00

**** FROM STA. 348.92.00 TO STA. 350+44.00
FROM STA. 352+71.00 TO STA. 356+37.00
FROM STA. 357+04.00 TO STA. 361+17.00

MODEL: Typical Section-13 [Sheet]
FILE NAME: c:\pw_work\pwidot\illinois.gov_edison.zohfonyi@illinois.gov\d1157876\D876U95-sht-typical.dgn

USER NAME = edison.zohfonyi	DESIGNED -	REVISED -	STATE OF ILLINOIS DEPARTMENT OF TRANSPORTATION
	DRAWN -	REVISED -	
	CHECKED -	REVISED -	
PLOT DATE = 10/15/2025	DATE -	REVISED -	

TYPICAL SECTIONS

SCALE: | SHEET 4 OF 6 SHEETS | STA. TO STA.

F.A.P RTE.	SECTION	COUNTY	TOTAL SHEETS	SHEET NO.
600	(130-1, 130-2)RS-4	ST. CLAIR	36	10
		CONTRACT NO. 76U95		
		ILLINOIS	FED. AID PROJECT	

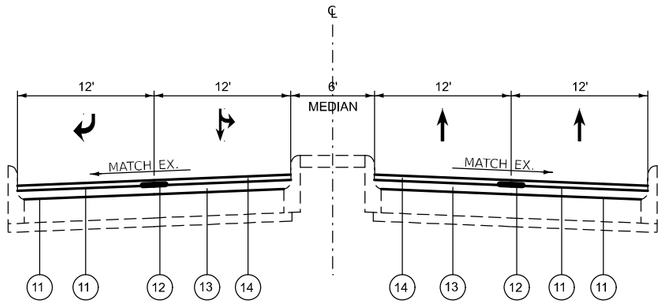

PROPOSED TYPICAL SECTION
DICK'S ENTRANCE

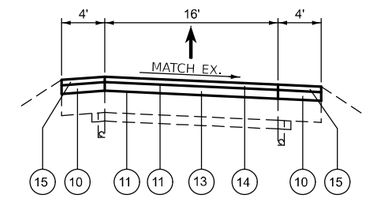

PROPOSED TYPICAL SECTION
RAMP C

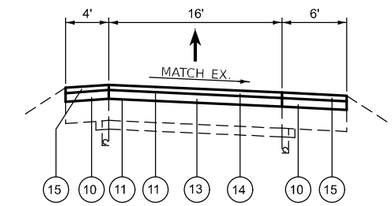

PROPOSED TYPICAL SECTION
RAMP A, D, & E

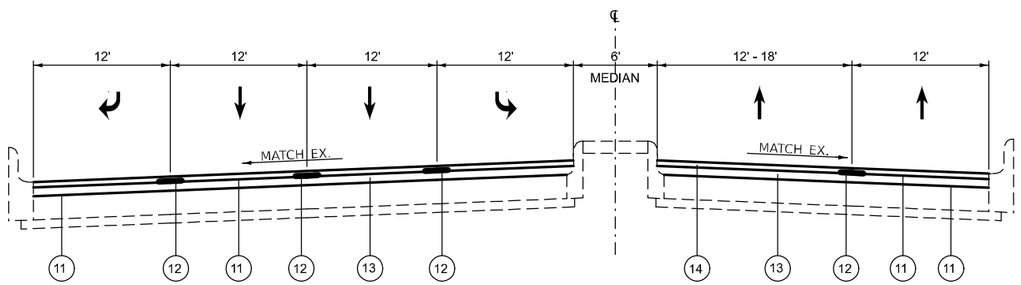

PROPOSED TYPICAL SECTION
MARKET PL

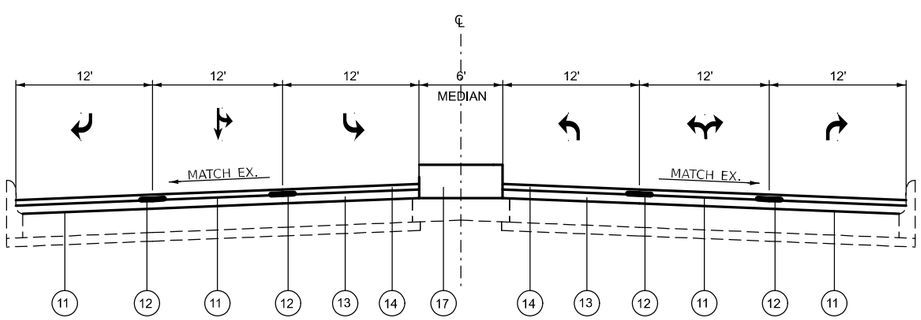

PROPOSED TYPICAL SECTION
ST. CLAIR SQUARE

LEGEND

1. EXISTING BITUMINOUS SHOULDERS, 8"
2. EXISTING PIPE UNDERDRAINS
3. EXISTING 4" SUB-BASE GRANULAR MATERIAL
4. EXISTING PCC BASE COURSE, 8"
5. EXISTING BITUMINOUS OVERLAY, 4"
6. EXISTING CONCRETE C&G, TYPE B-9.25
7. EXISTING CONCRETE C&G, TYPE B-6.24
8. EXISTING CONCRETE MEDIAN SURFACE
9. PROPOSED HMA SURFACE REMOVAL, 4"
10. PROPOSED HMA SHOULDER, 2½"
11. PROPOSED BITUMINOUS MATERIAL (TACK COAT)
12. PROPOSED LONGITUDINAL JOINT SEALANT
13. PROPOSED HMA BINDER COURSE, 2½"
14. PROPOSED HMA SURFACE COURSE, 1½"
15. PROPOSED HMA SHOULDER, 1½"
16. PROPOSED PIPE UNDERDRAINS 4"
17. PROPOSED CONCRETE MEDIAN
18. PROPOSED CONCRETE C&G, TYPE M-6.06
19. PROPOSED CONCRETE MEDIAN REMOVAL

MODEL: Typical Section-14 [Sheet]
FILE NAME: c:\pw_work\pwidot\illinois.gov_edison.zohfonyi@illinois.gov\d1157876\D876U95-sht-typical.dgn

USER NAME = edison.zohfonyi	DESIGNED -	REVISED -	
	DRAWN -	REVISED -	
	CHECKED -	REVISED -	
PLOT DATE = 10/15/2025	DATE -	REVISED -	

STATE OF ILLINOIS
DEPARTMENT OF TRANSPORTATION

TYPICAL SECTIONS

SCALE: | SHEET 5 OF 6 SHEETS | STA. | TO STA.

F.A.P RTE.	SECTION	COUNTY	TOTAL SHEETS	SHEET NO.
600	(130-1, 130-2)RS-4	ST. CLAIR	36	11

CONTRACT NO. 76U95

ILLINOIS | FED. AID PROJECT

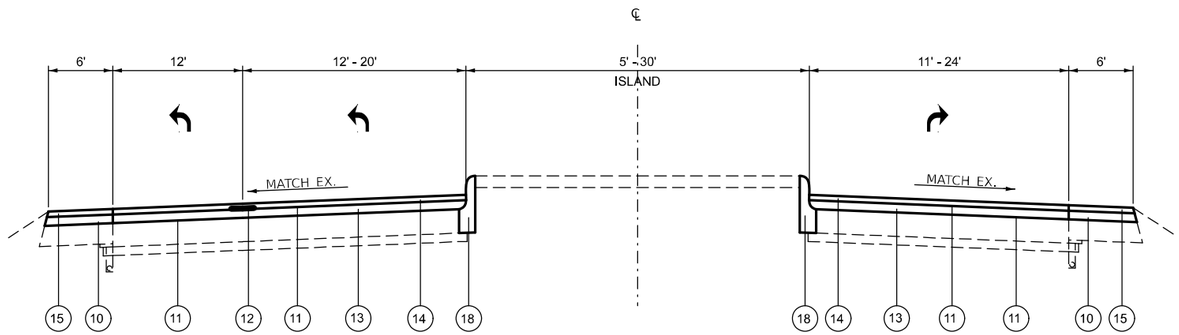

PROPOSED TYPICAL SECTION
RAMP F

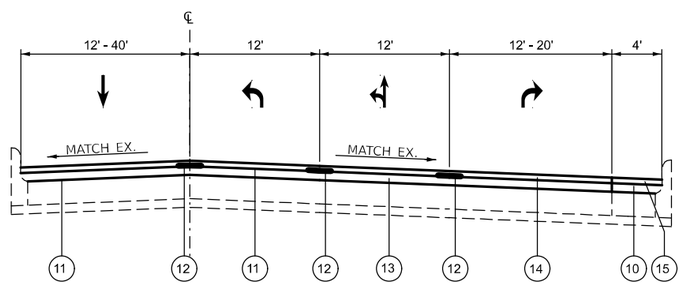

PROPOSED TYPICAL SECTION
LUDWIG DR

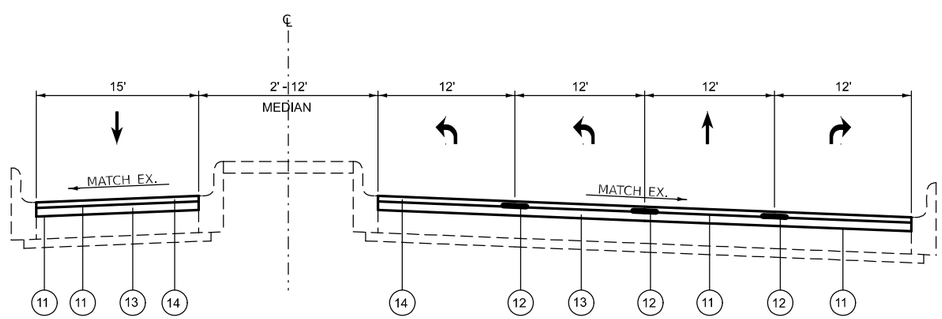

PROPOSED TYPICAL SECTION
FOUNTAINS PKWY

LEGEND

1. EXISTING BITUMINOUS SHOULDERS, 8"
2. EXISTING PIPE UNDERDRAINS
3. EXISTING 4" SUB-BASE GRANULAR MATERIAL
4. EXISTING PCC BASE COURSE, 8"
5. EXISTING BITUMINOUS OVERLAY, 4"
6. EXISTING CONCRETE C&G, TYPE B-9.25
7. EXISTING CONCRETE C&G, TYPE B-6.24
8. EXISTING CONCRETE MEDIAN SURFACE
9. PROPOSED HMA SURFACE REMOVAL, 4"
10. PROPOSED HMA SHOULDER, 2½"
11. PROPOSED BITUMINOUS MATERIAL (TACK COAT)
12. PROPOSED LONGITUDINAL JOINT SEALANT
13. PROPOSED HMA BINDER COURSE, 2½"
14. PROPOSED HMA SURFACE COURSE, 1½"
15. PROPOSED HMA SHOULDER, 1½"
16. PROPOSED PIPE UNDERDRAINS 4"
17. PROPOSED CONCRETE MEDIAN
18. PROPOSED CONCRETE C&G, TYPE M-6.06
19. PROPOSED CONCRETE MEDIAN REMOVAL

MODEL: Typical Section-15 [Sheet]
FILE NAME: c:\pw_work\pwidot\illinois.gov_edison.zohfonyi@illinois.gov\d1157876\D876U95-sht-typical.dgn

USER NAME = edison.zohfonyi	DESIGNED -	REVISED -	
	DRAWN -	REVISED -	
	CHECKED -	REVISED -	
PLOT DATE = 10/15/2025	DATE -	REVISED -	

STATE OF ILLINOIS
DEPARTMENT OF TRANSPORTATION

TYPICAL SECTIONS

SCALE: | SHEET 6 OF 6 SHEETS | STA. | TO STA.

F.A.P RTE.	SECTION	COUNTY	TOTAL SHEETS	SHEET NO.
600	(130-1, 130-2)RS-4	ST. CLAIR	36	12

CONTRACT NO. 76U95

ILLINOIS | FED. AID PROJECT

RESURFACING SCHEDULE

STATION		DIMENSION		HMA SURFACE REMOVAL 4"	LONGITUDINAL JOINT SEALANT	BITUMINOUS MATERIALS (TACK COAT) 1ST PASS	BITUMINOUS MATERIALS (TACK COAT) 2ND PASS	POLYMERIZED HMA BINDER COURSE IL-19.0 MIX "B" N90 (MAINLINE)	POLYMERIZED HMA BINDER COURSE IL-19.0 MIX "B" N90 (TURN LANES)	POLYMERIZED HMA SURFACE COURSE IL-9.5 MIX "E" N90 (MAINLINE)	POLYMERIZED HMA SURFACE COURSE IL-9.5 MIX "E" N90 (TURN LANES)	MATERIAL TRANSFER DEVICE
		LENGTH	WIDTH									
FROM	TO	FEET	FEET	SQ YD	FEET	POUND	POUND	TON	TON	TON	TON	TON
330+32.00	340+05.00	973.00	84	9081.3	5838.0	4086.6	2043.3	1089.76	181.63	653.9	109.0	1743.6
340+05.00	344+72.00	467.00	108	5604.0	3269.0	2521.8	1260.9	523.04	261.52	313.8	156.9	836.9
344+72.00	345+60.00	88.00	72	704.0	352.0	316.8	158.4	98.56		59.1		157.7
345+60.00	346+27.00	67.00	90	670.0	268.0	301.5	150.75	93.80		56.3		150.1
346+27.00	348+92.00	265.00	72	2120.0	795.0	954.00	477.00	296.80		178.08		474.88
348+92.00	350+44.00	152.00	78	1317.3	456.0	592.8	296.4	184.43		110.7		295.1
350+44.00	352+71.00	BRIDGE OMISSION SN 082-0176										
352+71.00	354+12.00	141.00	72	1128.0	423.0	507.6	253.8	157.92		94.8		252.7
354+12.00	357+04.00	292.00	60	1946.67	876.0	876.00	438.00	272.53		163.52		436.05
357+04.00	361+17.00	413.00	84	4405.3	2065.0	1734.6	867.3	385.47	154.19	231.3	92.5	616.7
361+17.00	363+49.00	232.00	60	1856.0	696.0	696.00	348.00	173.23	43.31	103.94	26.0	277.16
363+49.00	365+73.00	BRIDGE OMISSION SN 082-0208										
365+73.00	370+02.00	429.00	84	4576.0	1287.0	1801.8	900.9	480.48	80.08	288.3	48.0	768.8
370+02.00	371+27.00	125.00	72	1166.7	500.0	450.00	225.00	140.00		84.00		224.00
371+27.00	374+84.00	357.00	72	2856.0	1428.0	1285.2	642.6	333.20	66.64	199.9	40.0	533.1
374+84.00	376+69.28	185.28	70	1441.1	370.6	648.5	324.24	201.75		121.0		322.8
DICK' ENTRANCE		38.00	48	202.7	38.0	91.2	45.6	28.37		17.0		45.4
MARKET PL / ST. CLAIR SQUARE		102.00	72	816.00	102.00	367.20	183.60	76.16	38.08	45.70	22.85	121.86
RAMP E		170.00	16	302.2	170.0	136.0	68	42.31		25.4		67.7
RAMP C		70.00	16	124.4	70.0	56.0	28	17.42		10.5		27.9
RAMP D		115.00	16	204.4	54.0	92.0	46	28.62		17.2		45.8
RAMP F		83.00	70	645.6	54.0	290.5	145.25	90.38		54.2		144.6
RAMP A		95.00	16	168.9	54.0	76.0	38	23.64		14.2		37.8
LUDWIG DR / SALEM PL		170.00	48	906.7	54.0	408.0	204	31.73	63.47	19.0	38.1	50.8
FOUNTAINS PKWY		120.00	68	906.7	54.0	408.0	204	126.93		76.2		203.1
TOTAL				43150	19274	18698	9349	4897	889	2938	533	7834

MODEL: SCHEDULE OF QUANTITIES-1 [Sheet]
FILE NAME: c:\pw_work\pwidot\illinois.gov_edison.zohfonyi@illinois.gov\d1157876\D876U95-sht-schedule.dgn

USER NAME = edison.zohfonyi	DESIGNED -	REVISED -	
	DRAWN -	REVISED -	
	CHECKED -	REVISED -	
PLOT DATE = 10/1/2025	DATE -	REVISED -	

STATE OF ILLINOIS
DEPARTMENT OF TRANSPORTATION

SCHEDULE OF QUANTITIES

SCALE: | SHEET 1 OF 5 SHEETS | STA. TO STA.

F.A.P RTE.	SECTION	COUNTY	TOTAL SHEETS	SHEET NO.
600	(130-1, 130-2)RS-4	ST. CLAIR	36	13

CONTRACT NO. 76U95

ILLINOIS | FED. AID PROJECT

HMA SHOULDER SCHEDULE

STATION		DIMENSION			AREA	HMA SURFACE REMOVAL 4"	BITUMINOUS MATERIALS (TACK COAT) 1ST PASS	BITUMINOUS MATERIALS (TACK COAT) 2ND PASS	HMA SHOULDER 2 1/2" (LOWER)	HMA SHOULDER 1 1/2" (SURFACE)
		LENGTH	HMA SHOULDER WIDTH							
			EAST	WEST						
FROM	TO	FEET	FEET	FEET	SQ YD	SQ YD	POUND	POUND	TON	TON
330+32.00	333+26.00	294	0	8	261.3	261.3	117.6	58.8	36.6	22.0
334+64.00	338+92.00	428	0	8	380.4	380.4	171.2	85.6	53.3	32.0
340+05.00	344+08.00	403	6	8	626.9	626.9	282.1	141.1	87.8	52.7
345+23.00	348+70.00	347.00	5	10	578.3	578.3	260.25	130.1	81.0	48.6
348+70.00	350+44.00	174.00	4	8	232.0	232.0	104.4	52.2	32.5	19.5
350+44.00	352+71.00	BRIDGE OMISSION SN 082-0176								
352+71.00	354+12.00	141	4	8	188.0	188.0	84.6	42.3	26.3	15.8
354+12.00	356+06.00	194	10	8	388.0	388.0	174.6	87.3	54.3	32.6
356+06.00	358+28.00	222	8	8	394.7	394.7	177.6	88.8	55.3	33.2
358+28.00	361+40.00	312	4	10	485.3	485.3	218.4	109.2	67.9	40.8
362+48.00	363+49.00	101.00	8	10	202.0	202.0	90.9	45.45	28.3	17.0
363+49.00	365+73.00	BRIDGE OMISSION SN 080-0208								
365+73.00	368+93.00	320.00	4	8	426.7	426.7	192	96.00	59.7	35.8
372+47.00	376+69.25	422.25	8	4	563.0	563.0	253.35	126.7	78.8	47.3
RAMP E		170	6	4	188.9	188.9	85	42.5	26.4	15.9
RAMP C		70	4	4	62.2	62.2	28	14	8.7	5.2
RAMP D		115	6	4	127.8	127.8	57.5	28.75	17.9	10.7
RAMP F		83	6	6	110.7	110.7	49.8	24.9	15.5	9.3
RAMP A		95	6	4	105.6	105.6	47.5	23.75	14.8	8.9
LUDWIG DR		170	4	0	75.6	75.6	34	17	10.6	6.3
TOTAL						5397	2429	1214	756	453

MODEL: SCHEDULE OF QUANTITIES-2 [Sheet]
FILE NAME: c:\pw_work\pwidot\illinois.gov_edison.zohfonyi@illinois.gov\d1157876\D876U95-sht-schedule.dgn

USER NAME = edison.zohfonyi	DESIGNED -	REVISED -	
	DRAWN -	REVISED -	
	CHECKED -	REVISED -	
PLOT DATE = 10/1/2025	DATE -	REVISED -	

STATE OF ILLINOIS
DEPARTMENT OF TRANSPORTATION

SCHEDULE OF QUANTITIES

SCALE: | SHEET 2 OF 5 SHEETS | STA. | TO STA.

F.A.P RTE.	SECTION	COUNTY	TOTAL SHEETS	SHEET NO.
600	(130-1, 130-2)RS-4	ST. CLAIR	36	14

CONTRACT NO. 76U95

ILLINOIS | FED. AID PROJECT

PAVEMENT MARKING SCHEDULE

LOCATION		THERMOPLASTIC AND TEMPORARY PAVEMENT MARKING								PAVEMENT MARKING REMOVAL - WATER BLASTING	SHORT TERM PAVEMENT MARKING	SHORT TERM PAVEMENT MARKING REMOVAL	RAISED REFLECTIVE PAVEMENT MARKER		RAISED REFLECTIVE PAVEMENT MARKER REMOVAL
STATION		LINE - 6"				8" WHITE SOLID LINE	LINE - 12" DIAGONAL	24" WHITE STOP LINE	LETTERS AND SYMBOLS				ONE WAY CRYSTAL	TWO WAY AMBER	
FROM	TO	WHITE SOLID	WHITE SKIP-DASH	YELLOW SOLID	YELLOW SKIP-DASH										
		FEET	FEET	FEET	FEET	FEET	FEET	FEET	SQ FT	SQ FT	FEET	SQ FT	EACH	EACH	EACH
330+32.00	331+26.00	282	90	188					40	320	70	24	10		10
331+26.00	332+69.00	286	180	286					20	396	50	17	10		10
332+69.00	333+53.00	252	90	168				48	50	401	130	44	10		10
334+45.00	335+95.00	450	160	300				54	40	603	150	50	10		10
335+95.00	337+75.00	360	270	360					20	515	60	20	12		12
337+75.00	338+04.00	87	40	58				48	40	229	100	34	2		2
338+04.00	340+18.00		80							40	30	10			0
340+18.00	341+66.00	444	230	296				60	70	675	200	67	10		10
341+66.00	344+75.50	928.5	390	619					80	1049	200	67	20		20
344+75.50	345+63.00	175	90	175			60	36		352	70	24	8		8
345+63.00	346+20.00	114	30				36			108	10	4			0
346+20.00	349+92.00	1116	280	744			156	36	20	1318	160	54	20		20
349+92.00	354+06.00	1242	210	828					70	1210	150	50	24		24
354+06.00	355+65.00	477	80	318			296	24	20	802	80	27	6		6
355+65.00	356+27.00	124	90							107	20	7	3		3
356+27.00	357+20.00	93	50	186				24		213	50	17	6		6
357+20.00	359+25.00	820	160	410					70	765	110	37	12		12
359+25.00	361+49.00	896	170	448				48	100	953	190	64	12		12
361+49.00	362+48.00		110							55	20	7			0
362+48.00	363+51.00	309	60	206				41	40	410	100	34	8		8
363+51.00	364+54.00	206	80	206						246	20	7	4		4
364+54.00	365+42.00	176	50	176						201	20	7	4		4
365+42.00	367+00.00	316	120	474			50			505	30	10	6		6
367+00.00	370+05.00	610	160	915			185	24	50	1126	130	44	12		12
370+05.00	371+07.00		50							25	10	4			0
371+07.00	374+22.00	945	160	630				36	50	990	150	50	12		12
374+22.00	374+82.00	60	30	120						105	20	7	3		3
374+82.00	376+69.28	187.28	100	374.56	100					381	40	14	9	10	19
															0
DICK'S ENTRANCE		76	20					28	40	144	80	27			0
															0
MARKET PL / ST. CLAIR SQUARE		204	60	204				80	50	444	150	50	4		4
RAMP E		170		110		170	60			314	20	7			
RAMP C		140								70	10	4			
RAMP D		230								115	20	7			
RAMP F		166	30	83		211	167	24	50	546	90	30	1		1
RAMP A		190				185	124			343	10	4			
LUDWIG DR / SALEM PL		510		340				84	100	693	200	67	6		6
FOUNTAINS PKWY		360		240		520	94	36	50	863	100	34	6		6
TOTAL		13002	3720	9463	100	1086	1228	731	1070	17632	3050	1031	250	10	260

MODEL: SCHEDULE OF QUANTITIES-3 [Sheet]
FILE NAME: c:\pw_work\dot\illinois.gov\ edison.zohfonyi@illinois.gov\d1157876\D876U95-sht-schedule.dgn

USER NAME = edison.zohfonyi	DESIGNED -	REVISED -	
	DRAWN -	REVISED -	
	CHECKED -	REVISED -	
PLOT DATE = 10/15/2025	DATE -	REVISED -	

STATE OF ILLINOIS
DEPARTMENT OF TRANSPORTATION

SCHEDULE OF QUANTITIES

SCALE: | SHEET 3 OF 5 SHEETS | STA. | TO STA.

F.A.P RTE.	SECTION	COUNTY	TOTAL SHEETS	SHEET NO.
600	(130-1, 130-2)RS-4	ST. CLAIR	36	15
		CONTRACT NO. 76U95		
	ILLINOIS	FED. AID PROJECT		

TEMPORARY RAMP/ACCESS

CL OF ENTRANCE OR SIDEROAD	LOCATION	LENGTH	WIDTH	TEMPORARY RAMP	COMMENTS
		FEET	FEET	SQ YD	
330+32.00		13.3	93	138	BEGIN PROJECT
334+01.00	R	3	73	25	
334+01.00	L	3	113	38	DICK'S ENTRANCE
339+53.00	R	3	103	35	ST. CLAIR SQUARE
339+53.00	L	3	120	40	MARKET PL
345+01.00	R	3	18	6	RAMP E
345+01.00	L	3	24	8	RAMP B
345+72.00	L	3	24	8	RAMP B
348+92.00	L	3	16	6	RAMP C
350+44.00		13.3	100	148	BRIDGE OMISSION
352+71.00		13.3	100	148	BRIDGE OMISSION
354+06.00	R	3	16	6	RAMP D
356+25.00	R	3	30	10	RAMP F
357+00.00	R	3	16	6	RAMP F
357+20.00	L	3	6	2	RAMP A
362+00.00	R	3	122	41	SALEM PL
362+00.00	L	3	136	46	LUDWIG DR
363+49.00		13.3	88	131	BRIDGE OMISSION
365+73.00		13.3	88	131	BRIDGE OMISSION
370+50.00	R	3	200	67	FOUNTAINS PKWY
376+69.28		13.3	77	114	END PROJECT
TOTAL				1154	

CURB & MEDIAN SCHEDULE

STATION		PAINT CURB	PRISMATIC CURB REFLECTORS
FROM	TO	FEET	EACH
330+32.00	333+53.00	71	20
334+45.00	339+20.00	142	30
340+00.00	345+60.00	142	34
346+20.00	355+65.00	142	54
356+27.00	361+50.00	142	33
362+45.00	370+05.00	142	44
371+25.00	374+22.00	71	21
MEDIAN ON DICK'S ENTRANCE		26	3
MEDIAN ON MARKET PLACE		10	3
MEDIAN ON ST. CLAIR SQUARE		26	3
CORNER ISLAND AT IL 159 & RAMP E		68	16
CORNER ISLAND AT IL 159 & RAMP F		65	15
CORNER ISLAND AT IL 159 & RAMP A		72	21
NORTHEAST CORNER ISLAND AT IL 159 & FOUNTAINS PKWY		70	16
SOUTHEAST CORNER ISLAND AT IL 159 & FOUNTAINS PKWY		72	29
TOTAL		1261	342

CURB AND GUTTER SCHEDULE IL 159

LOCATION	CONCRETE MEDIAN REMOVAL	CONCRETE MEDIAN TYPE SB-6.06	COMBINATION CONCRETE CURB & GUTTER REMOVAL	COMBINATION CONCRETE CURB & GUTTER TYPE M-6.06
	SQ FT	SQ FT	FEET	FEET
ST. CLAIR SQUARE	75	75		
CORNER ISLAND AT IL 159 & RAMP F			80	80
TOTAL	75	75	80	80

PIPE UNDERDRAIN SCHEDULE

STATION		NB/SB	PIPE UNDERDRAIN TYPE 1, 4"	PIPE UNDERDRAIN (SPECIAL) 4"	CONRETE HEADWALL FOR PIPE DRAINS	SHOULDER REMOVAL AND REPLACEMENT	REMARKS
FROM	TO		FEET	FEET	EACH	FOOT	EACH
353+00	356+30	NB	330	20	1	330	
367+92	369+42	NB	150	0		150	TIE TO CULVERT
		TOTAL	480	20	1	480	

MODEL: SCHEDULE OF QUANTITIES-4 [Sheet]
FILE NAME: c:\pw_work\pwidot\illinois.gov_edison.zohfonyi@illinois.gov\d1157876\D876U95-sht-schedule.dgn

USER NAME = edison.zohfonyi	DESIGNED -	REVISED -	
	DRAWN -	REVISED -	
	CHECKED -	REVISED -	
PLOT DATE = 10/15/2025	DATE -	REVISED -	

STATE OF ILLINOIS
DEPARTMENT OF TRANSPORTATION

SCHEDULE OF QUANTITIES

SCALE: SHEET 4 OF 5 SHEETS STA. TO STA.

F.A.P RTE.	SECTION	COUNTY	TOTAL SHEETS	SHEET NO.
600	(130-1, 130-2)RS-4	ST. CLAIR	36	16
		CONTRACT NO. 76U95		
		ILLINOIS FED. AID PROJECT		

GUARDRAIL AND TRAFFIC BARRIERS

STATION		LOCATION	STEEL PLATE BEAM GUARDRAIL TYPE A, 9 FOOT POSTS LON	LENGTH OF NEED	TRAFFIC BARRIER TERMINAL, TYPE 1 (SPECIAL) TANGENT	TRAFFIC BARRIER TERMINAL, TYPE 6	TERMINAL MARKER DIRECT APPLIED	GUARDRAIL REFLECTORS, TYPE A	GUARDRAIL REMOVAL
FROM	TO		FOOT	FOOT	EACH	EACH	EACH	EACH	FOOT
350+00.35	350+50.35	LT	137.50	212.50	1	1	1	4	230.00
349+86.81	350+36.81	RT	50.00	125.00	1	1	1	1	136.00
352+65.20	353+77.70	RT	37.50	100.00	1	1	1	1	106.00
352+77.90	354+65.40	LT	100.00	175.00	1	1	1	3	190.00
363+49.82	363+99.82	LT	37.50	112.50	1	1	1	1	120.00
363+36.51	363+86.51	RT	37.50	112.50	1	1	1	1	121.00
365+44.97	367+57.47	LT	125.00	200.00	1	1	1	3	210.00
365+33.80	367+46.30	RT	125.00	200.00	1	1	1	3	210.00
TOTAL			650.00		8	8	8	17	1323

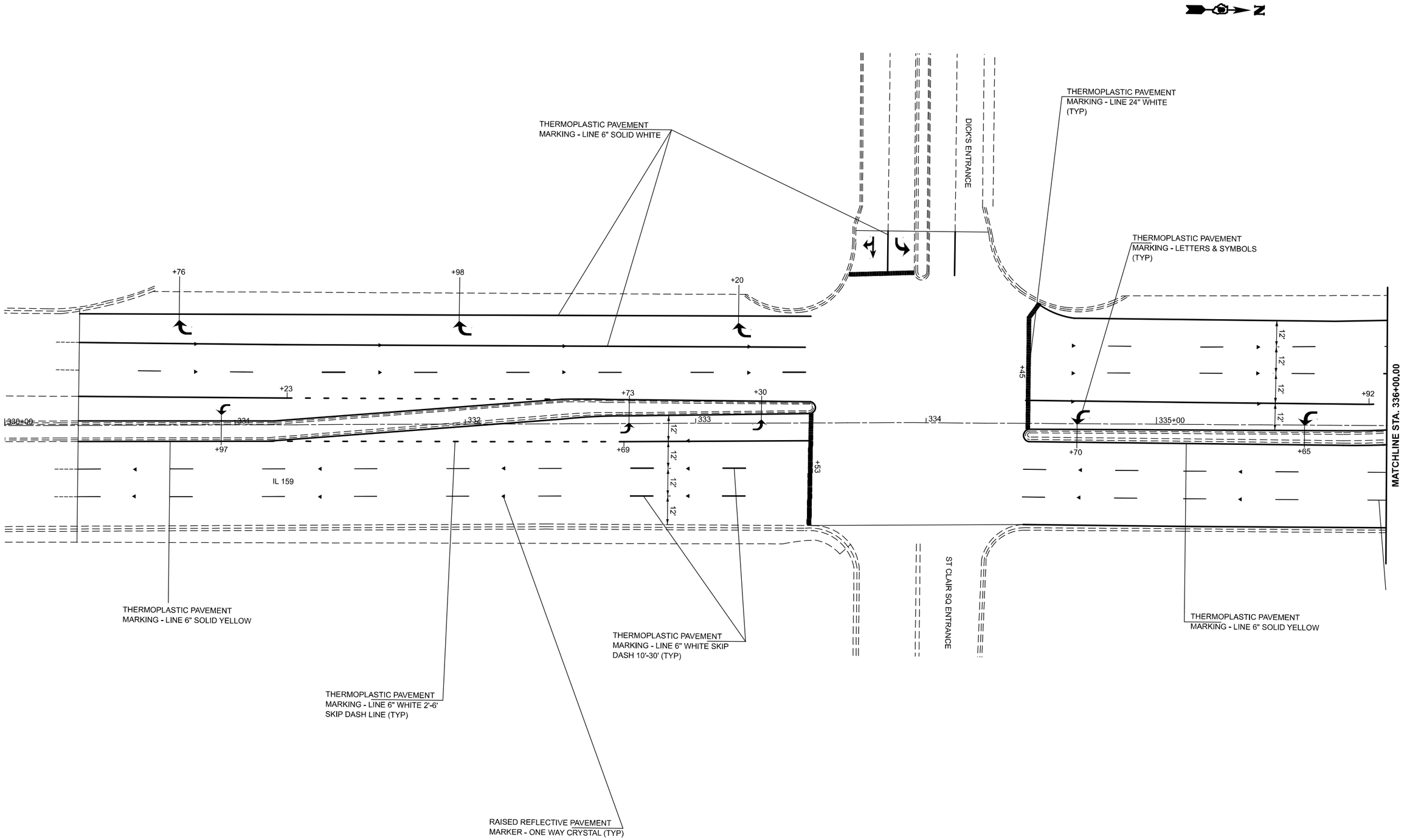

MODEL: IL159 - pavement markings [Sheet]
FILE NAME: c:\pw_work\pwidot\illinois.gov_edison.zohfonyi@illinois.gov\d1157876\D876U95-sht-cmk.dgn

USER NAME = edison.zohfonyi	DESIGNED -	REVISED -	
	DRAWN -	REVISED -	
	CHECKED -	REVISED -	
PLOT DATE = 10/15/2025	DATE -	REVISED -	

STATE OF ILLINOIS
DEPARTMENT OF TRANSPORTATION

PAVEMENT MARKING

SCALE: 1"=20' | SHEET 1 OF 8 SHEETS | STA. 330+00.00 TO STA. 336+00.00

F.A.P RTE.	SECTION	COUNTY	TOTAL SHEETS	SHEET NO.
600	(130-1, 130-2)RS-4	ST. CLAIR	36	18

CONTRACT NO. 76U95

ILLINOIS | FED. AID PROJECT

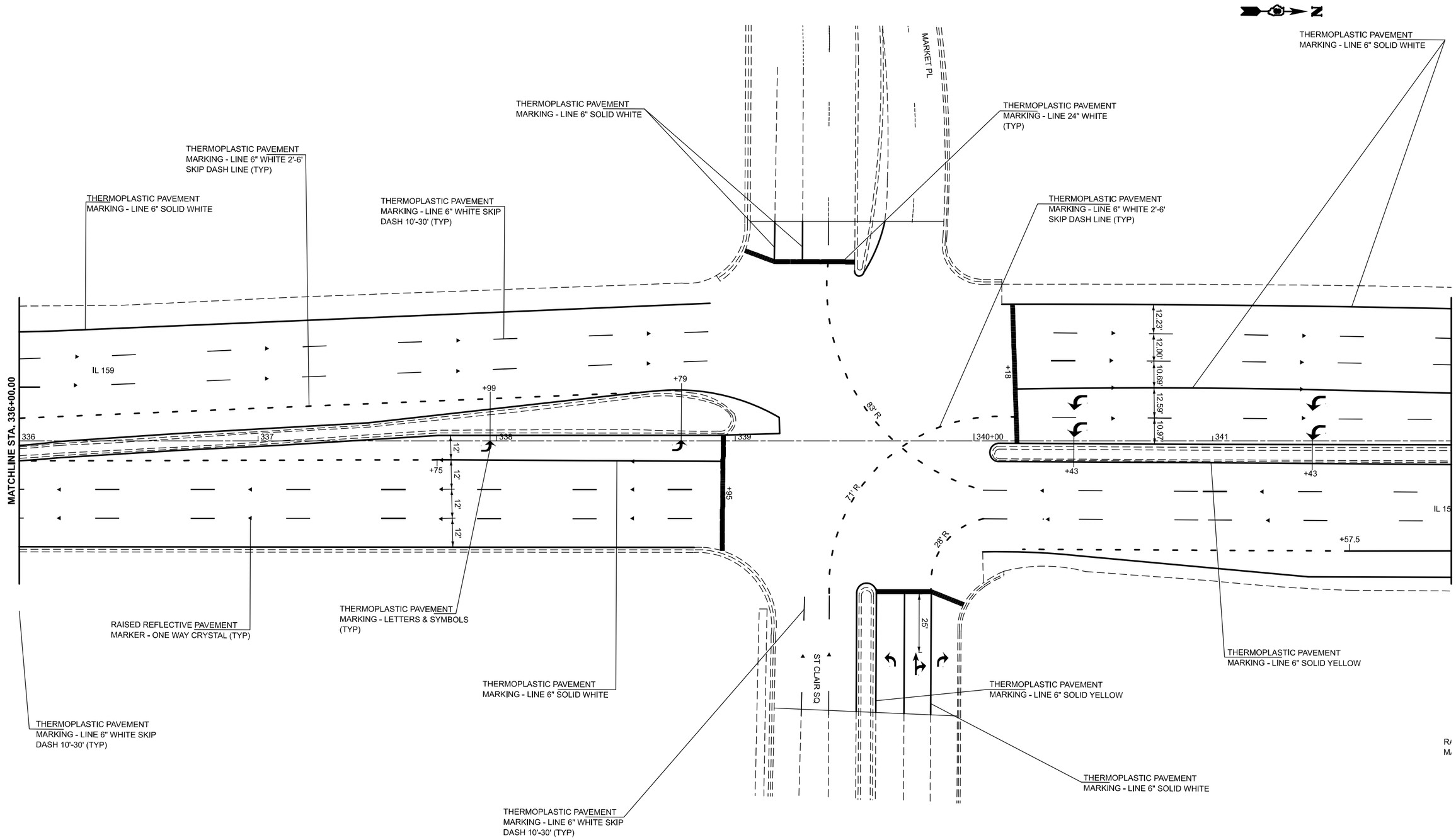

MODEL: IL159 - pavement markings-1 [Sheet]
FILE NAME: c:\pw_work\pwidot\illinois.gov_edison.zohfonyi@illinois.gov\d1157876\D876U95-sht-pmk.dgn

USER NAME = edison.zohfonyi	DESIGNED -	REVISED -	
	DRAWN -	REVISED -	
	CHECKED -	REVISED -	
PLOT DATE = 10/15/2025	DATE -	REVISED -	

STATE OF ILLINOIS
DEPARTMENT OF TRANSPORTATION

PAVEMENT MARKING

SCALE: 1"=20' | SHEET 2 OF 8 SHEETS | STA. 336+00.00 TO STA. 342+00.00

F.A.P RTE.	SECTION	COUNTY	TOTAL SHEETS	SHEET NO.
600	(130-1, 130-2)RS-4	ST. CLAIR	36	19

CONTRACT NO. 76U95

ILLINOIS | FED. AID PROJECT

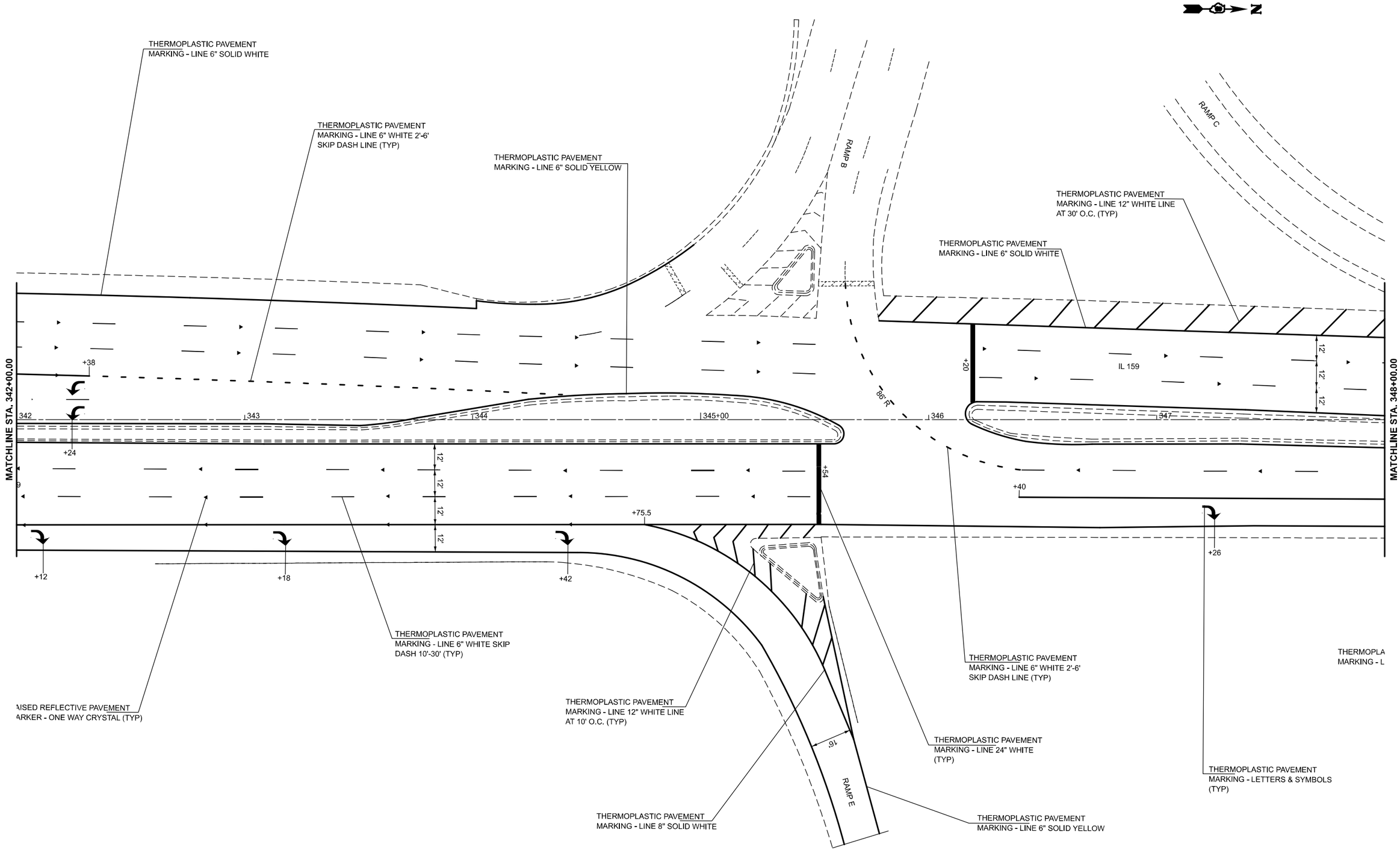

MODEL: IL159 - pavement markings-2 [Sheet]
FILE NAME: c:\pw_work\pwidot\illinois.gov_edison.zohfonyi@illinois.gov\d1157876\D876U95-sht-pmk.dgn

USER NAME = edison.zohfonyi	DESIGNED -	REVISED -	
	DRAWN -	REVISED -	
	CHECKED -	REVISED -	
PLOT DATE = 10/15/2025	DATE -	REVISED -	

STATE OF ILLINOIS
DEPARTMENT OF TRANSPORTATION

PAVEMENT MARKING

SCALE: 1"=20' | SHEET 3 OF 8 SHEETS | STA. 342+00.00 TO STA. 348+00.00

F.A.P RTE.	SECTION	COUNTY	TOTAL SHEETS	SHEET NO.
600	(130-1, 130-2)RS-4	ST. CLAIR	36	20

CONTRACT NO. 76U95

ILLINOIS | FED. AID PROJECT

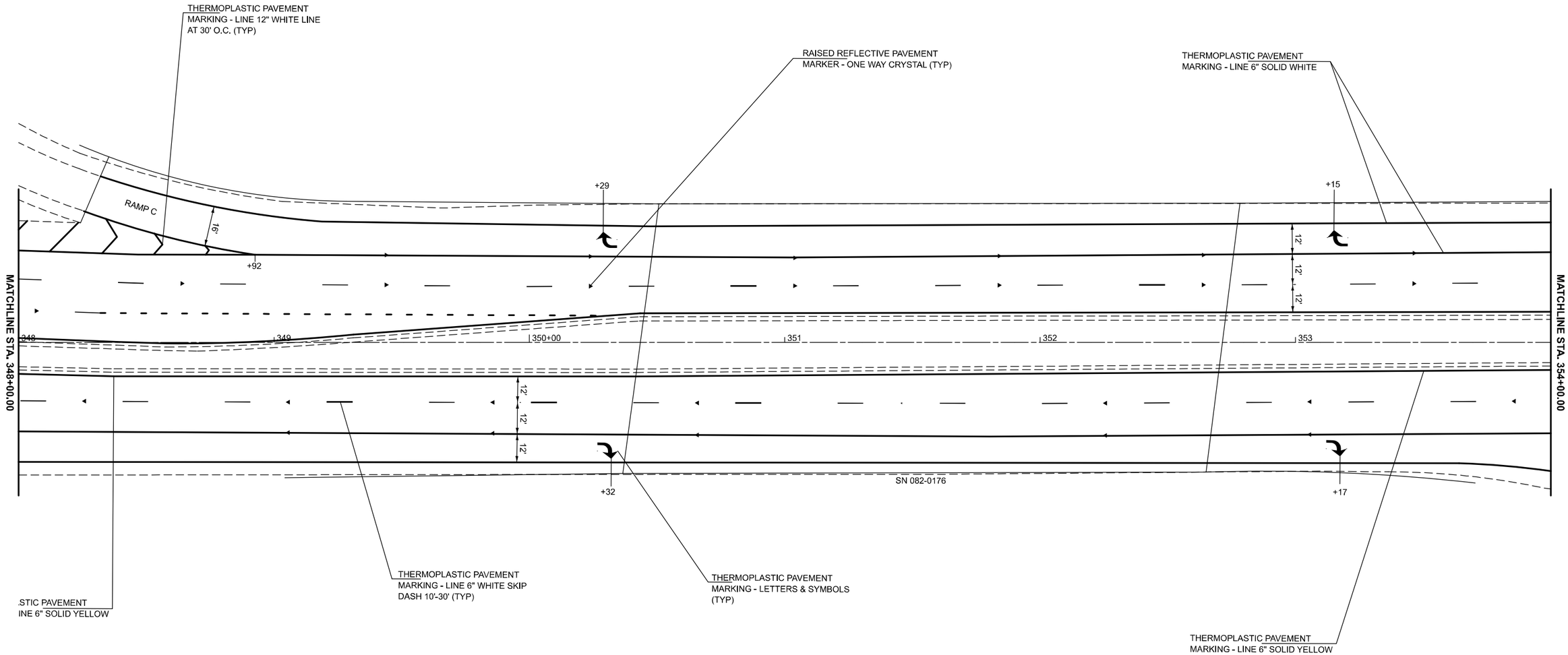

MODEL: IL159 - pavement markings-3 [Sheet]
FILE NAME: c:\pw_work\pwidot\illinois.gov_edison.zohfonyi@illinois.gov\d1157876\D876U95-sht-pmk.dgn

USER NAME = edison.zohfonyi	DESIGNED -	REVISED -	
	DRAWN -	REVISED -	
	CHECKED -	REVISED -	
PLOT DATE = 10/15/2025	DATE -	REVISED -	

STATE OF ILLINOIS
DEPARTMENT OF TRANSPORTATION

PAVEMENT MARKING

SCALE: 1"=20' | SHEET 4 OF 8 SHEETS | STA. 348+00.00 TO STA. 354+00.00

F.A.P RTE.	SECTION	COUNTY	TOTAL SHEETS	SHEET NO.
600	(130-1, 130-2)RS-4	ST. CLAIR	36	21

CONTRACT NO. 76U95

ILLINOIS | FED. AID PROJECT

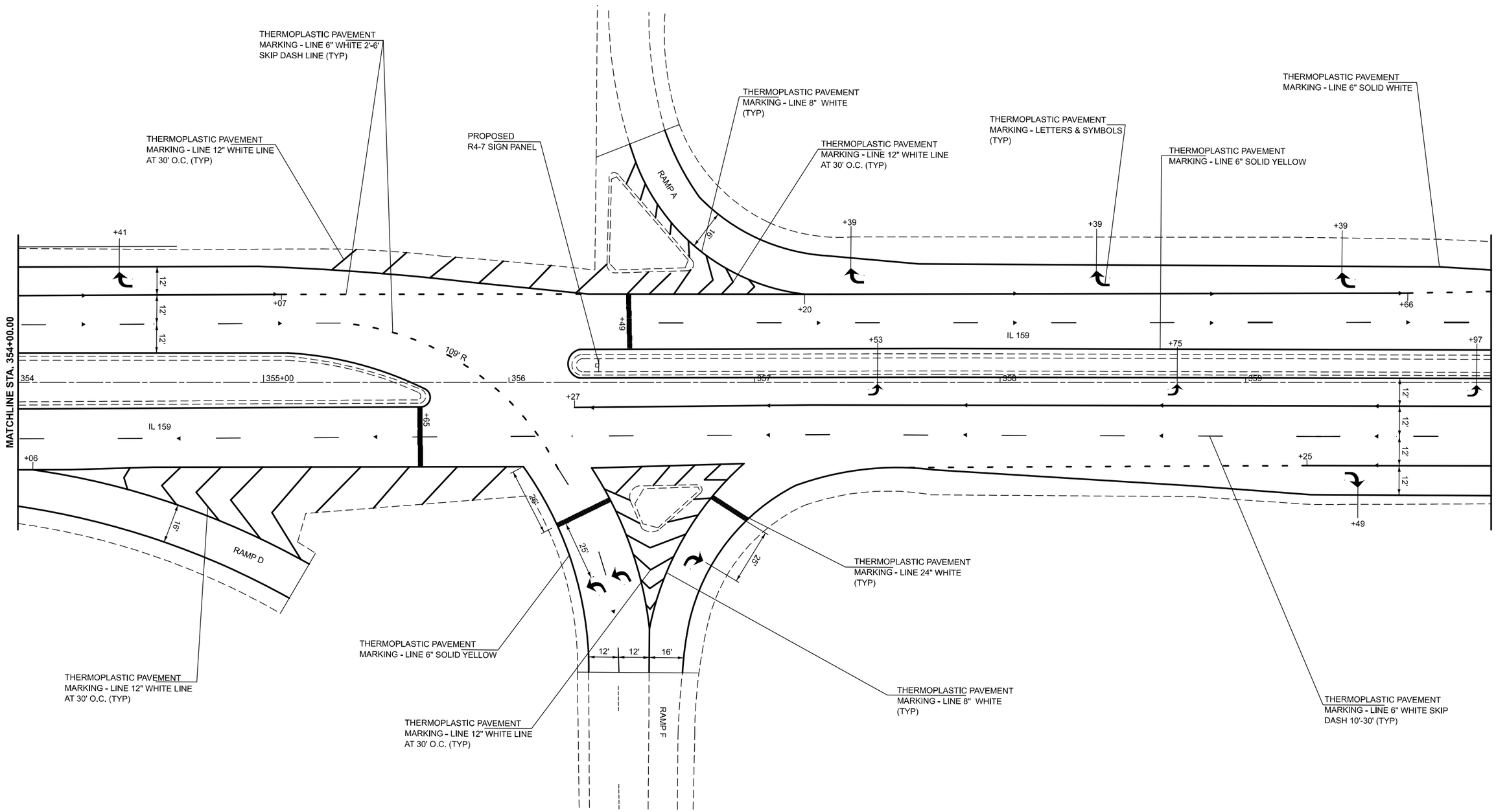

MODEL: IL159 - pavement markings-4 [Sheet]
FILE NAME: c:\pw_work\pwidot\illinois.gov_edison.zohfonyi@illinois.gov\d1157876\D876U95-sht-pmk.dgn

USER NAME = edison.zohfonyi	DESIGNED -	REVISED -	
	DRAWN -	REVISED -	
	CHECKED -	REVISED -	
PLOT DATE = 10/15/2025	DATE -	REVISED -	

STATE OF ILLINOIS
DEPARTMENT OF TRANSPORTATION

PAVEMENT MARKING

SCALE: 1"=20' | SHEET 5 OF 8 SHEETS | STA. 354+00.00 TO STA. 360+00.00

F.A.P RTE.	SECTION	COUNTY	TOTAL SHEETS	SHEET NO.
600	(130-1, 130-2)RS-4	ST. CLAIR	36	22

CONTRACT NO. 76U95

ILLINOIS | FED. AID PROJECT

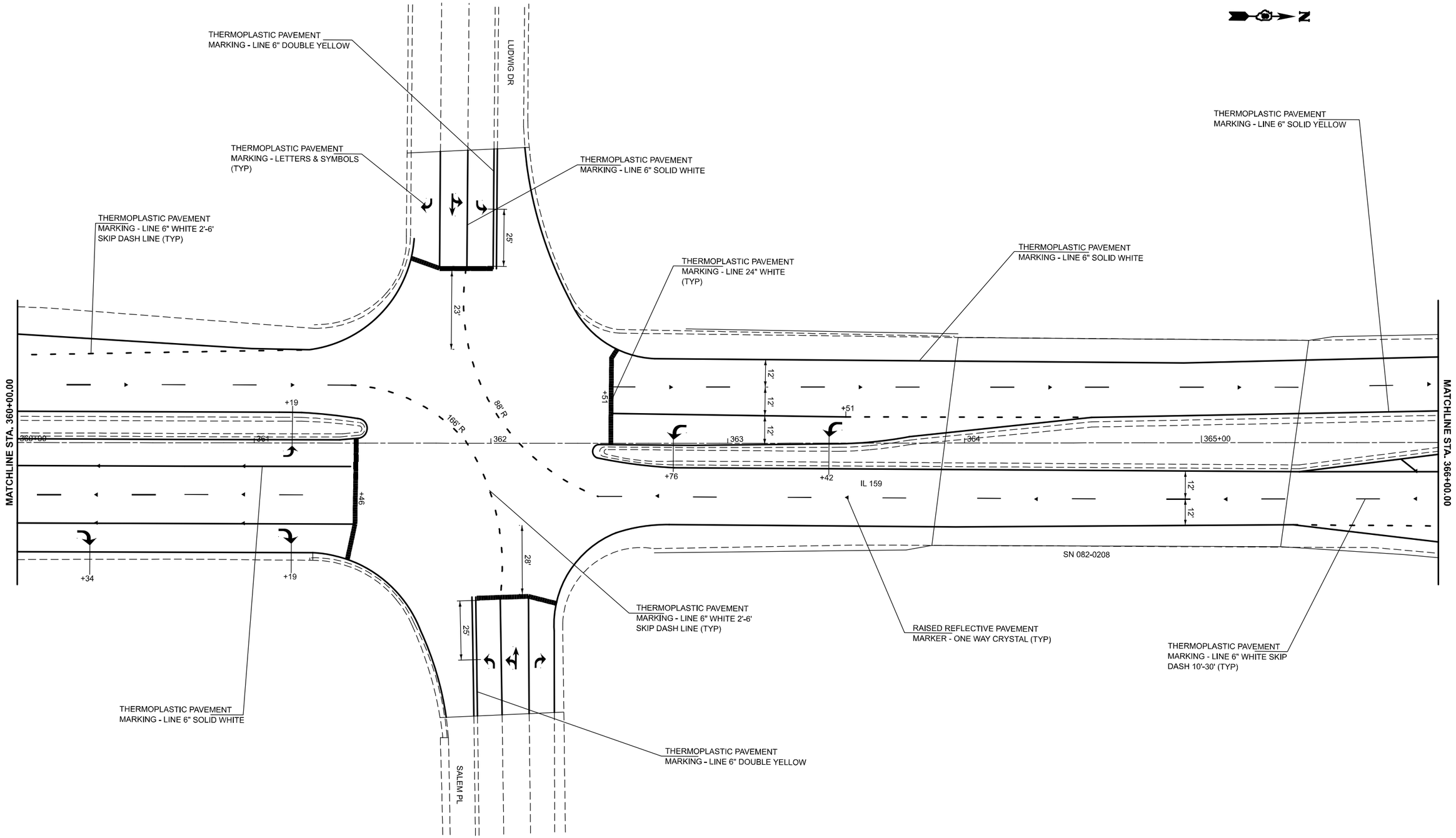

MODEL: IL159 - pavement markings-5 [Sheet]
FILE NAME: c:\pw_work\pwidot\illinois.gov_edison.zohfonyi@illinois.gov\d1157876\D976U95-sht-pmk.dgn

USER NAME = edison.zohfonyi	DESIGNED -	REVISED -	
	DRAWN -	REVISED -	
	CHECKED -	REVISED -	
PLOT DATE = 10/15/2025	DATE -	REVISED -	

STATE OF ILLINOIS
DEPARTMENT OF TRANSPORTATION

PAVEMENT MARKING

SCALE: 1"=20' | SHEET 6 OF 8 SHEETS | STA. 360+00.00 TO STA. 366+00.00

F.A.P RTE.	SECTION	COUNTY	TOTAL SHEETS	SHEET NO.
600	(130-1, 130-2)RS-4	ST. CLAIR	36	23

CONTRACT NO. 76U95

ILLINOIS | FED. AID PROJECT

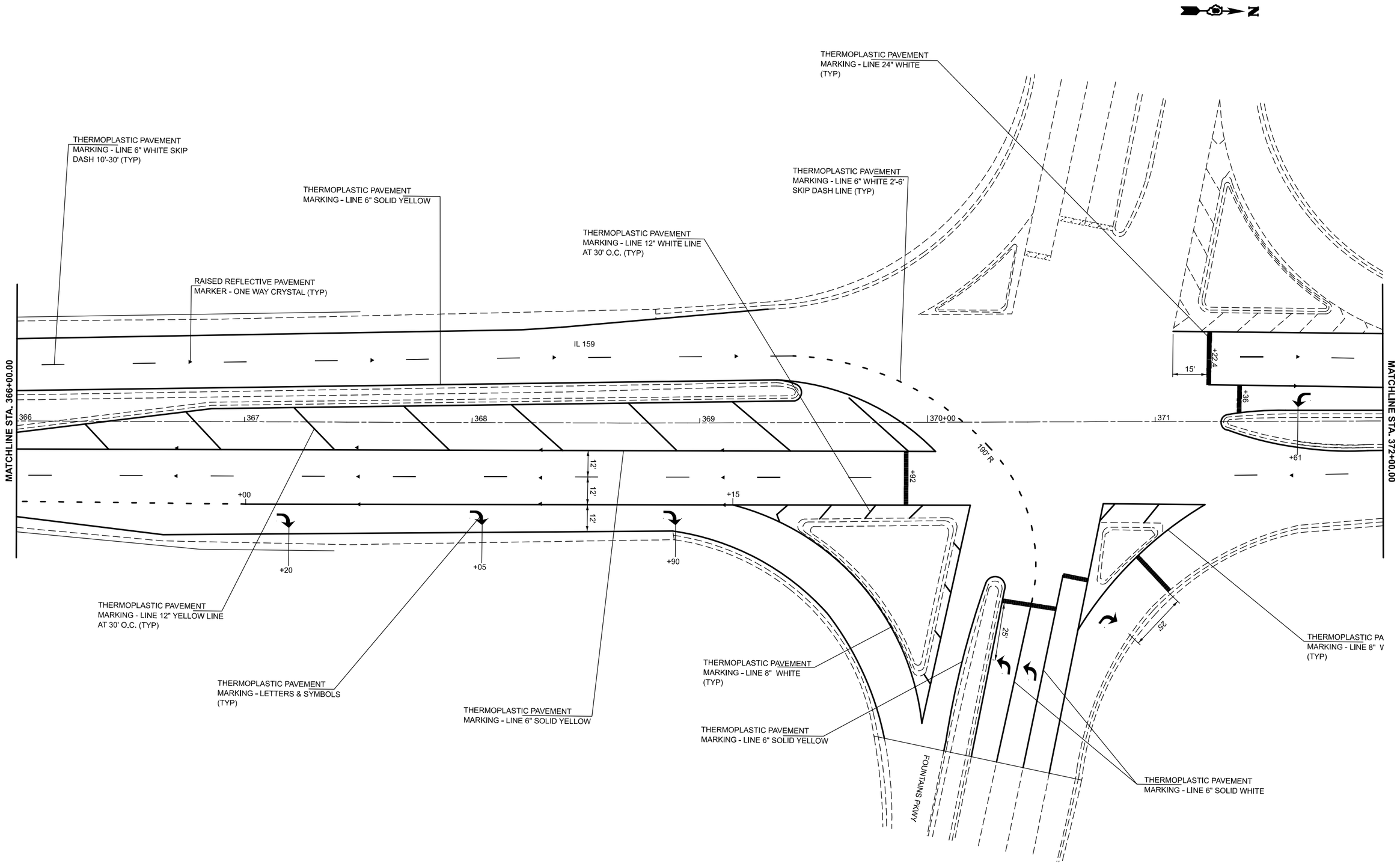

MODEL: IL159 - pavement markings-8 [Sheet]
FILE NAME: c:\pw_work\pwidot\illinois.gov_edison.zohfonyi@illinois.gov\d1157876\D876U95-sht-pmk.dgn

USER NAME = edison.zohfonyi	DESIGNED -	REVISED -	
	DRAWN -	REVISED -	
	CHECKED -	REVISED -	
PLOT DATE = 10/15/2025	DATE -	REVISED -	

STATE OF ILLINOIS
DEPARTMENT OF TRANSPORTATION

PAVEMENT MARKING

SCALE: 1"=20' | SHEET 7 OF 8 SHEETS | STA. 366+00.00 TO STA. 372+00.00

F.A.P RTE.	SECTION	COUNTY	TOTAL SHEETS	SHEET NO.
600	(130-1, 130-2)RS-4	ST. CLAIR	36	24

CONTRACT NO. 76U95

ILLINOIS | FED. AID PROJECT

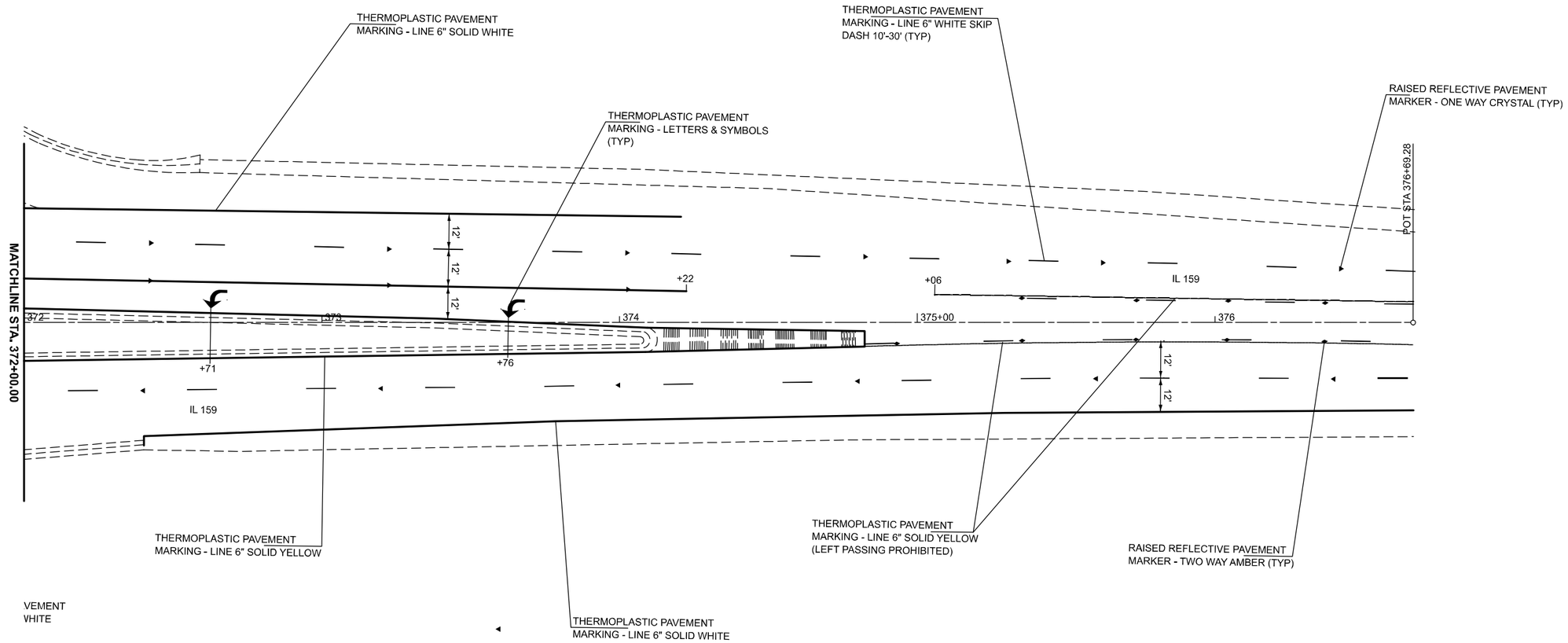

MODEL: IL159 - pavement markings-7 [Sheet]
FILE NAME: c:\pw_work\pwidot\illinois.gov_edison.zohfonyi@illinois.gov\d1157876\D876U95-sht-pmk.dgn

USER NAME = edison.zohfonyi	DESIGNED -	REVISED -	
	DRAWN -	REVISED -	
	CHECKED -	REVISED -	
PLOT DATE = 10/15/2025	DATE -	REVISED -	

STATE OF ILLINOIS
DEPARTMENT OF TRANSPORTATION

PAVEMENT MARKING

SCALE: 1"=20' | SHEET 8 OF 8 SHEETS | STA. 372+00.00 TO STA. 378+00.00

F.A.P RTE.	SECTION	COUNTY	TOTAL SHEETS	SHEET NO.
600	(130-1, 130-2)RS-4	ST. CLAIR	36	25

CONTRACT NO. 76U95

ILLINOIS | FED. AID PROJECT

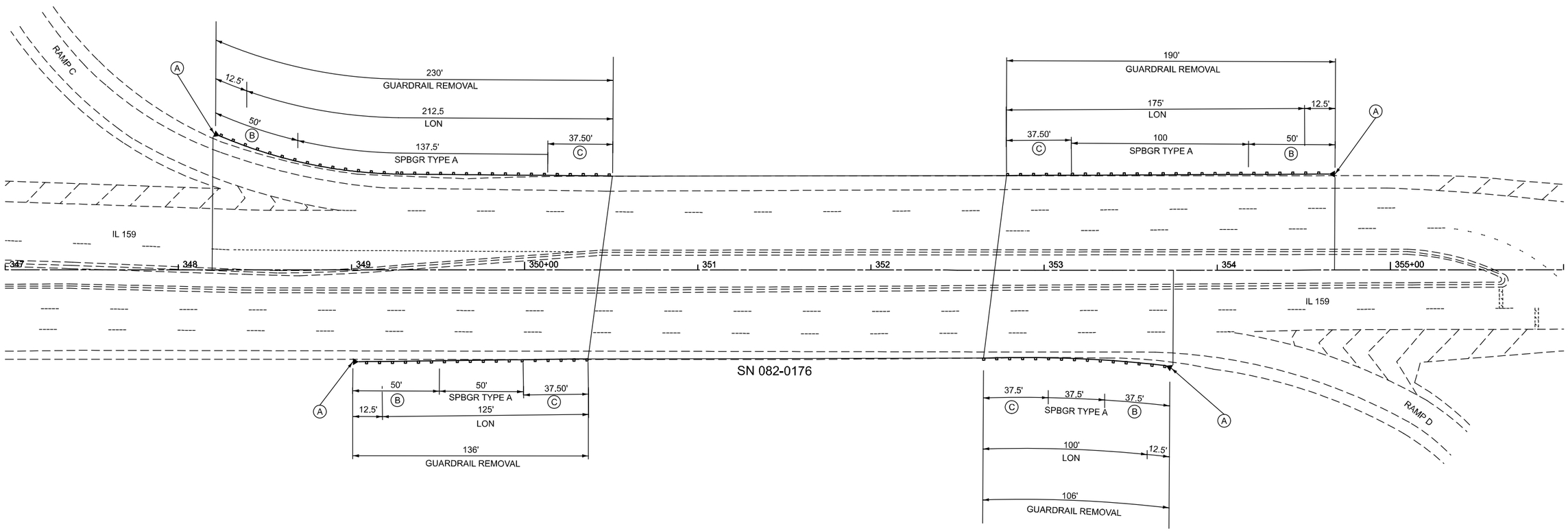

NOTES:

(A) TERMINAL MARKER DIRECT APPLIED

(B) TRAFFIC BARRIER TERMINAL TYPE 1, SPECIAL (TANGENT)

(C) TRAFFIC BARRIER TERMINAL TYPE 6

MODEL: Unnamed Plan - Guardrail-1 [Sheet]
FILE NAME: c:\pw_work\pwidot\illinois.gov_edison.zohfonyi@illinois.gov\d1157876\D876U95-sht-plan.dgn1.dgn

USER NAME = edison.zohfonyi	DESIGNED -	REVISED -	
	DRAWN -	REVISED -	
	CHECKED -	REVISED -	
PLOT DATE = 9/19/2025	DATE -	REVISED -	

STATE OF ILLINOIS
DEPARTMENT OF TRANSPORTATION

GUARDRAIL PLAN
IL 159

SCALE: 1"=30' | SHEET 1 OF 2 SHEETS | STA. | TO STA.

F.A.P RTE.	SECTION	COUNTY	TOTAL SHEETS	SHEET NO.
600	(130-1, 130-2)RS-4	ST. CLAIR	36	26

CONTRACT NO. 76U95

ILLINOIS | FED. AID PROJECT

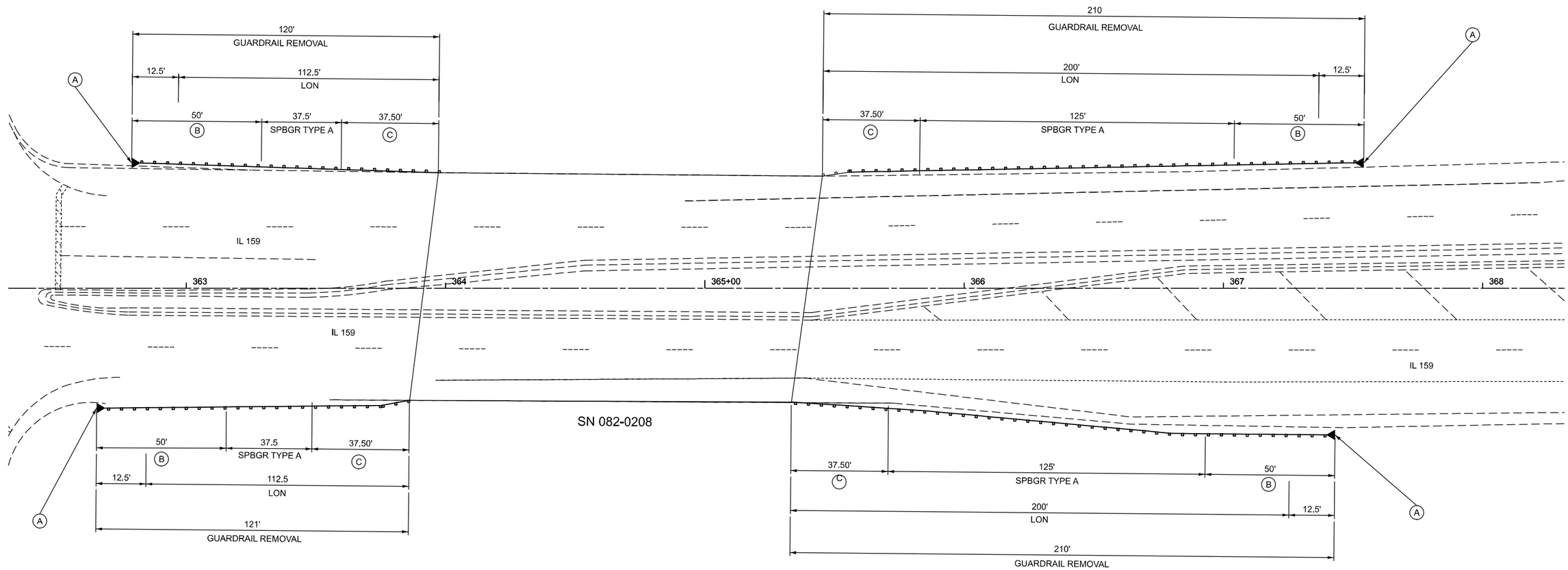

NOTES:

(A) TERMINAL MARKER DIRECT APPLIED

(B) TRAFFIC BARRIER TERMINAL TYPE 1, SPECIAL (TANGENT)

(C) TRAFFIC BARRIER TERMINAL TYPE 6

MODEL: Unnamed Plan-1 - Guardrail-2 [Sheet]
FILE NAME: c:\pw_work\pwidot\illinois.gov_edison.zohfonyi\d1157876\D876U95-sht-plan.dgn1.dgn

USER NAME = edison.zohfonyi	DESIGNED -	REVISED -	
	DRAWN -	REVISED -	
	CHECKED -	REVISED -	
PLOT DATE = 9/19/2025	DATE -	REVISED -	

STATE OF ILLINOIS
DEPARTMENT OF TRANSPORTATION

GUARDRAIL PLAN
IL 159

SCALE: 1"=20' | SHEET 2 OF 2 SHEETS | STA. | TO STA.

F.A.P RTE.	SECTION	COUNTY	TOTAL SHEETS	SHEET NO.
600	(130-1, 130-2)RS-4	ST. CLAIR	36	27

CONTRACT NO. 76U95

ILLINOIS | FED. AID PROJECT

SCHEDULE OF QUANTITIES			TOTAL QUANTITIES	IL 159 & DICK'S ENTRANCE	IL 159 & MARKET PL / ST. SCLAIR SQUARE	IL 159 & RAMP F	IL 159 & LUDWIG DR / SALEM PL	IL 159 & FOUNTAINS PKWY.
CODE NO	ITEM	UNIT						
X8860105	DETECTOR LOOP REPLACEMENT	FOOT	7520	936	1183	583	1929	2889

HIGHWAY STANDARDS

886001-01 DETECTOR LOOP INSTALLATIONS
886006-01 TYPICAL LAYOUT FOR DETECTOR LOOPS

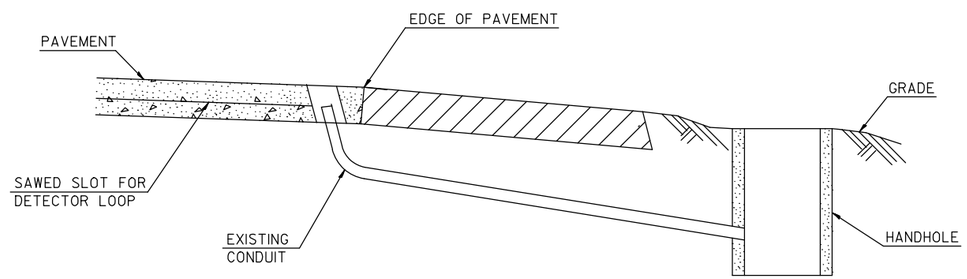

DETAIL
(NO SCALE)

RE-USE EXISTING DETECTOR LOOP LEAD-IN CONDUIT

1 DRILL OUT PAVEMENT SEALANT AND CLEAN EXISTING CONDUIT.
2 REMOVE EXISTING CABLE TO HANDHOLE.
3 INSTALL LOOP LEAD-IN CONDUCTORS IN CONDUIT.
4 SPLICE NEW DETECTOR LOOP LEAD-IN CONDUCTORS TO EXISTING LEAD-IN CABLE IN HANDHOLE.
5 FILL HOLE WITH APPROVED SEALER. PREVENT SEALER FROM ENTERING INTO CONDUIT.

NOT A PAY ITEM. THE COST OF THIS WORK SHALL BE INCLUDED IN THE PAY ITEM "DETECTOR LOOP, TYPE I"

MODEL: Detector loop Gen Notes [Sheet]
FILE NAME: c:\pw_work\pwidot\illinois.gov_edison.zohfonyi@illinois.gov\d1157876\D876U95-sht-gennote.dgn

USER NAME = edison.zohfonyi	DESIGNED -	REVISED -	STATE OF ILLINOIS DEPARTMENT OF TRANSPORTATION
	DRAWN -	REVISED -	
	CHECKED -	REVISED -	
PLOT DATE = 9/19/2025	DATE -	REVISED -	

DETECTOR LOOP REPLACEMENT, HIGHWAY STANDARDS, GENERAL NOTES, SCHEDULE OF QUANTITIES AND DETAILS

SCALE: | SHEET 1 OF 8 SHEETS | STA. TO STA.

F.A.P RTE.	SECTION	COUNTY	TOTAL SHEETS	SHEET NO.
600	(130-1, 130-2)RS-4	ST. CLAIR	36	28

CONTRACT NO. 76U95

ILLINOIS | FED. AID PROJECT

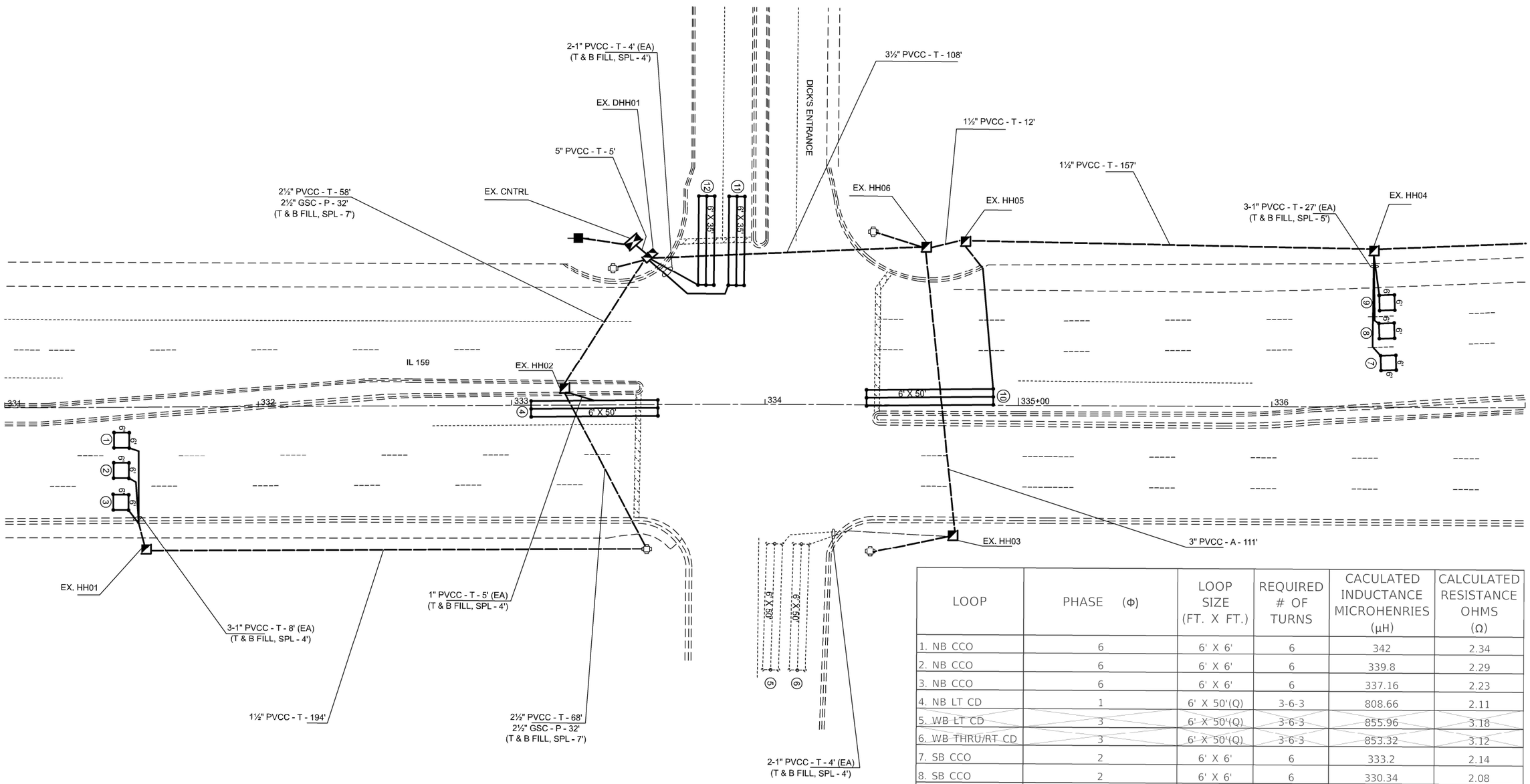

LOOP	PHASE (Φ)	LOOP SIZE (FT. X FT.)	REQUIRED # OF TURNS	CACULATED INDUCTANCE MICROHENRIES (μH)	CALCULATED RESISTANCE OHMS (Ω)
1. NB CCO	6	6' X 6'	6	342	2.34
2. NB CCO	6	6' X 6'	6	339.8	2.29
3. NB CCO	6	6' X 6'	6	337.16	2.23
4. NB LT CD	1	6' X 50'(Q)	3-6-3	808.66	2.11
5. WB LT CD	3	6' X 50'(Q)	3-6-3	855.96	3.18
6. WB THRU/RT CD	3	6' X 50'(Q)	3-6-3	853.32	3.12
7. SB CCO	2	6' X 6'	6	333.2	2.14
8. SB CCO	2	6' X 6'	6	330.34	2.08
9. SB CCO	2	6' X 6'	6	327.7	2.02
10. SB LT CD	5	6' X 50'(Q)	3-6-3	832.2	2.64
11. EB LT CD	4	6' X 35'(Q)	3-6-3	573.54	1.43
12. SB THRU/RT CD	4	6' X 35'(Q)	3-6-3	569.58	1.34

THE ABOVE VALUES ARE CALCULATED OF COMBINED LOOP AND LEAD-IN INDUCTANCEAND RESISTANCE. ACTUAL MEASURED VALUES SHOULD BE WITHIN +/- 20% OF THESE VALUES.
(Q)=QUADRAPOLE

MODEL: Unnamed Plan - DETECTOR LOOPS [Sheet]
FILE NAME: c:\pw_work\pwidot\illinois.gov_edison.zohfonyi@illinois.gov\d1157876\D876U95-TS.dgn1.dgn

USER NAME = edison.zohfonyi	DESIGNED -	REVISED -	
	DRAWN -	REVISED -	
	CHECKED -	REVISED -	
PLOT DATE = 9/19/2025	DATE -	REVISED -	

STATE OF ILLINOIS
DEPARTMENT OF TRANSPORTATION

DETECTOR LOOP REPLACEMENT PLAN
IL 159 AT DICK'S ENTRANCE

SCALE: 1"=20' | SHEET 2 OF 8 SHEETS | STA. | TO STA.

F.A.P RTE.	SECTION	COUNTY	TOTAL SHEETS	SHEET NO.
600	(130-1, 130-2)RS-4	ST. CLAIR	36	29
		CONTRACT NO. 76U95		
		ILLINOIS FED. AID PROJECT		

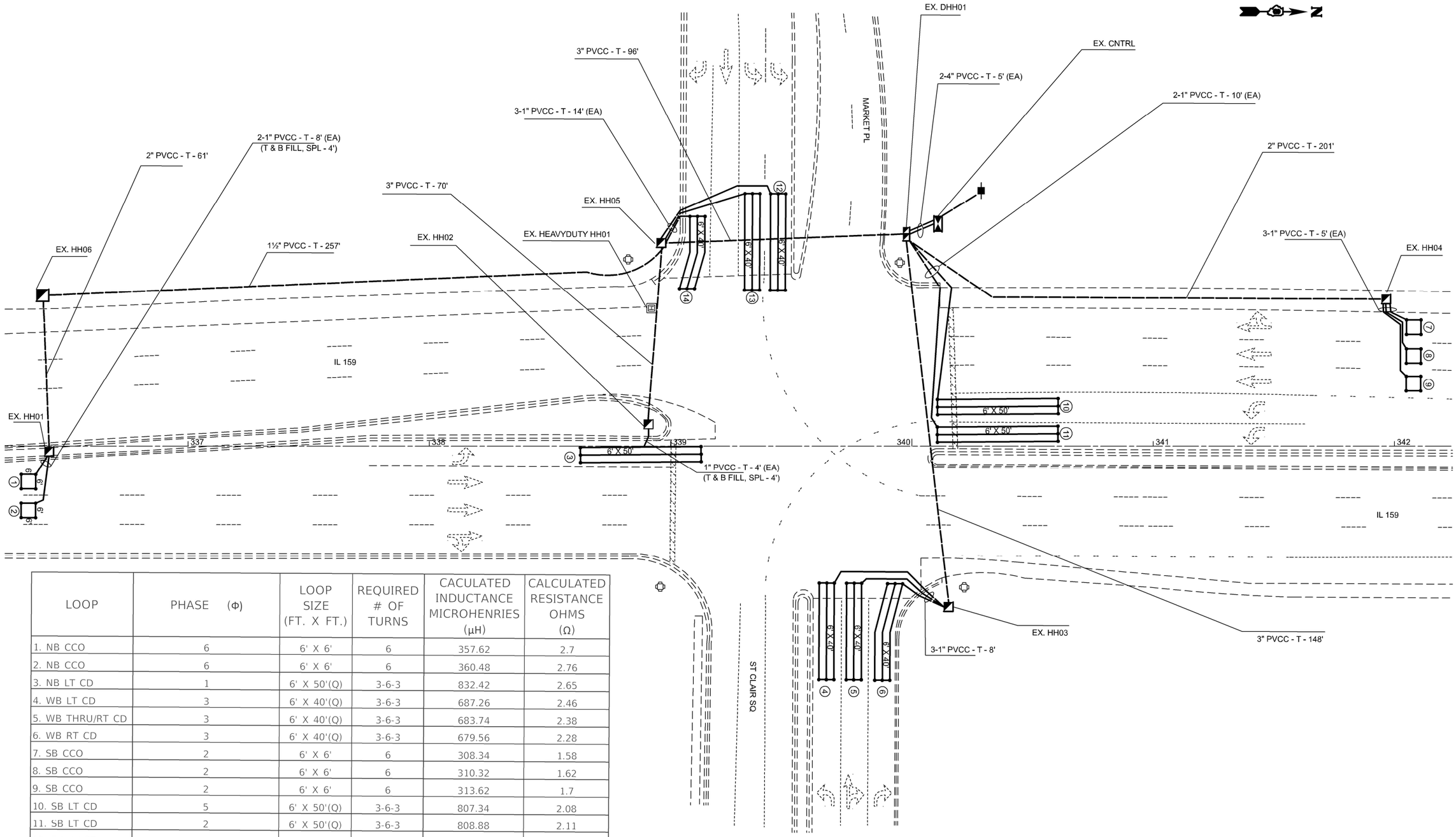

LOOP	PHASE (Φ)	LOOP SIZE (FT. X FT.)	REQUIRED # OF TURNS	CACULATED INDUCTANCE MICROHENRIES (μH)	CALCULATED RESISTANCE OHMS (Ω)
1. NB CCO	6	6' X 6'	6	357.62	2.7
2. NB CCO	6	6' X 6'	6	360.48	2.76
3. NB LT CD	1	6' X 50'(Q)	3-6-3	832.42	2.65
4. WB LT CD	3	6' X 40'(Q)	3-6-3	687.26	2.46
5. WB THRU/RT CD	3	6' X 40'(Q)	3-6-3	683.74	2.38
6. WB RT CD	3	6' X 40'(Q)	3-6-3	679.56	2.28
7. SB CCO	2	6' X 6'	6	308.34	1.58
8. SB CCO	2	6' X 6'	6	310.32	1.62
9. SB CCO	2	6' X 6'	6	313.62	1.7
10. SB LT CD	5	6' X 50'(Q)	3-6-3	807.34	2.08
11. SB LT CD	2	6' X 50'(Q)	3-6-3	808.88	2.11
12. EB LT CD	4	6' X 40'(Q)	3-6-3	670.98	2.09
13. EB LT CD	4	6' X 40'(Q)	3-6-3	667.46	2.01
12. EB RT CD	4	6' X 40'(Q)	3-6-3	662.4	1.89

THE ABOVE VALUES ARE CALCULATED OF COMBINED LOOP AND LEAD-IN INDUCTANCEAND RESISTANCE. ACTUAL MEASURED VALUES SHOULD BE WITHIN +/- 20% OF THESE VALUES.
(Q)=QUADRAPOLE

MODEL: Unnamed Plan-1 - DETECTOR LOOPS-1 [Sheet]
FILE NAME: c:\pw_work\pw\dot\illinois.gov_edison.zohfonyi@illinois.gov\d1157376\D876U95-TS.dgn1.dgn

USER NAME = edison.zohfonyi	DESIGNED -	REVISED -	
	DRAWN -	REVISED -	
	CHECKED -	REVISED -	
PLOT DATE = 9/19/2025	DATE -	REVISED -	

STATE OF ILLINOIS
DEPARTMENT OF TRANSPORTATION

DETECTOR LOOP REPLACEMENT PLAN
IL 159 AT MARKET PL/ST. CLAIR SQUARE

SCALE: 1"=20' | SHEET 3 OF 8 SHEETS | STA. TO STA.

F.A.P RTE.	SECTION	COUNTY	TOTAL SHEETS	SHEET NO.
600	(130-1, 130-2)RS-4	ST. CLAIR	36	30

CONTRACT NO. 76U95

ILLINOIS | FED. AID PROJECT

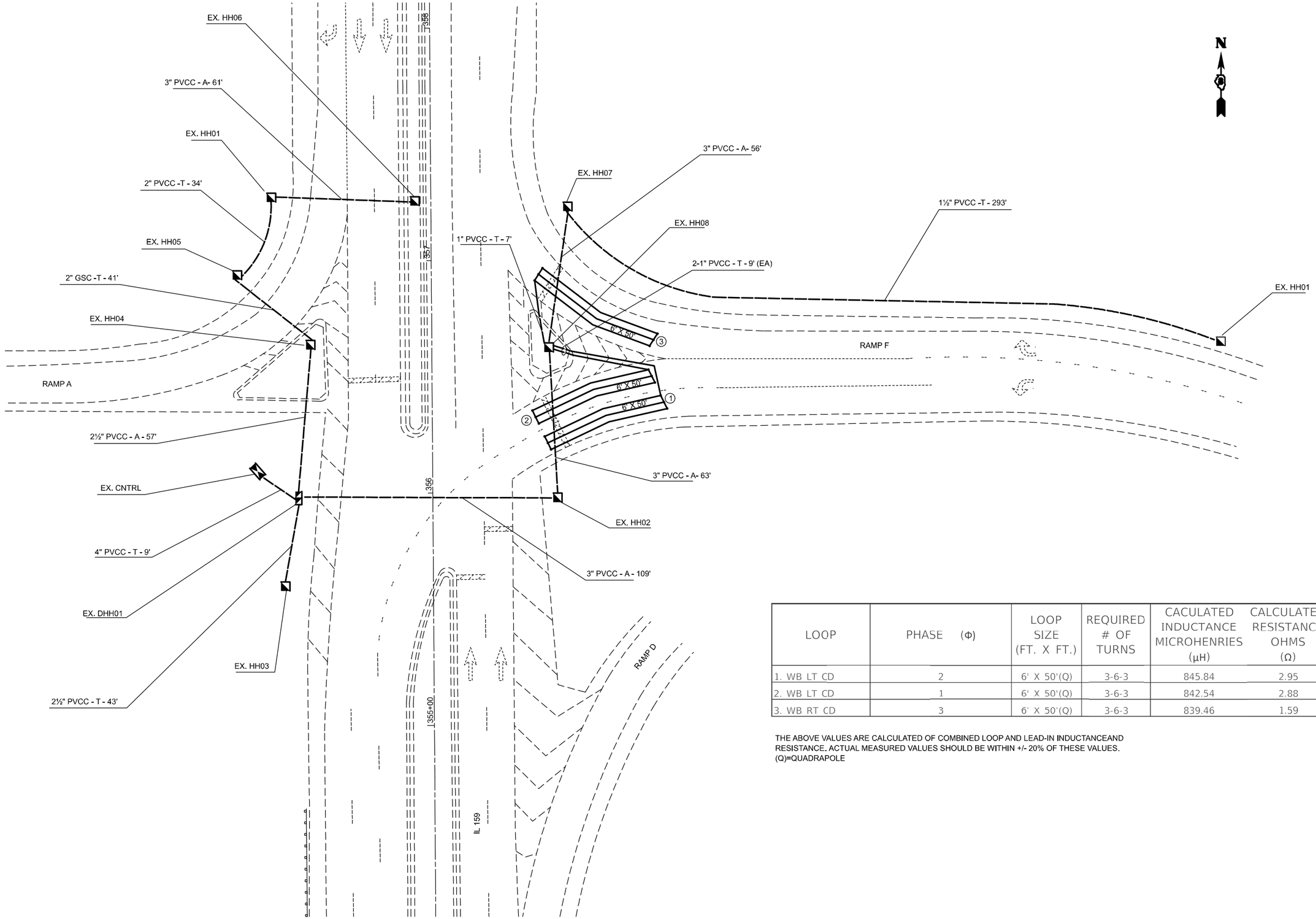

LOOP	PHASE (Φ)	LOOP SIZE (FT. X FT.)	REQUIRED # OF TURNS	CACULATED INDUCTANCE MICROHENRIES (μH)	CALCULATED RESISTANCE OHMS (Ω)
1. WB LT CD	2	6' X 50'(Q)	3-6-3	845.84	2.95
2. WB LT CD	1	6' X 50'(Q)	3-6-3	842.54	2.88
3. WB RT CD	3	6' X 50'(Q)	3-6-3	839.46	1.59

THE ABOVE VALUES ARE CALCULATED OF COMBINED LOOP AND LEAD-IN INDUCTANCEAND RESISTANCE. ACTUAL MEASURED VALUES SHOULD BE WITHIN +/- 20% OF THESE VALUES.
(Q)=QUADRAPOLE

MODEL: DETECTOR LOOP-3 [Sheet]
FILE NAME: c:\pw_work\pwidot\illinois.gov_edison.zohfonyi@illinois.gov\d1157876\D876U95-TS.dgn1.dgn

USER NAME = edison.zohfonyi	DESIGNED -	REVISED -	
	DRAWN -	REVISED -	
	CHECKED -	REVISED -	
PLOT DATE = 9/19/2025	DATE -	REVISED -	

STATE OF ILLINOIS
DEPARTMENT OF TRANSPORTATION

DETECTOR LOOP REPLACEMENT PLAN
IL 159 AT RAMP F

SCALE: 1":20' | SHEET 4 OF 8 SHEETS | STA. | TO STA.

F.A.P RTE.	SECTION	COUNTY	TOTAL SHEETS	SHEET NO.
600	(130-1, 130-2)RS-4	ST. CLAIR	36	31

CONTRACT NO. 76U95

ILLINOIS | FED. AID PROJECT

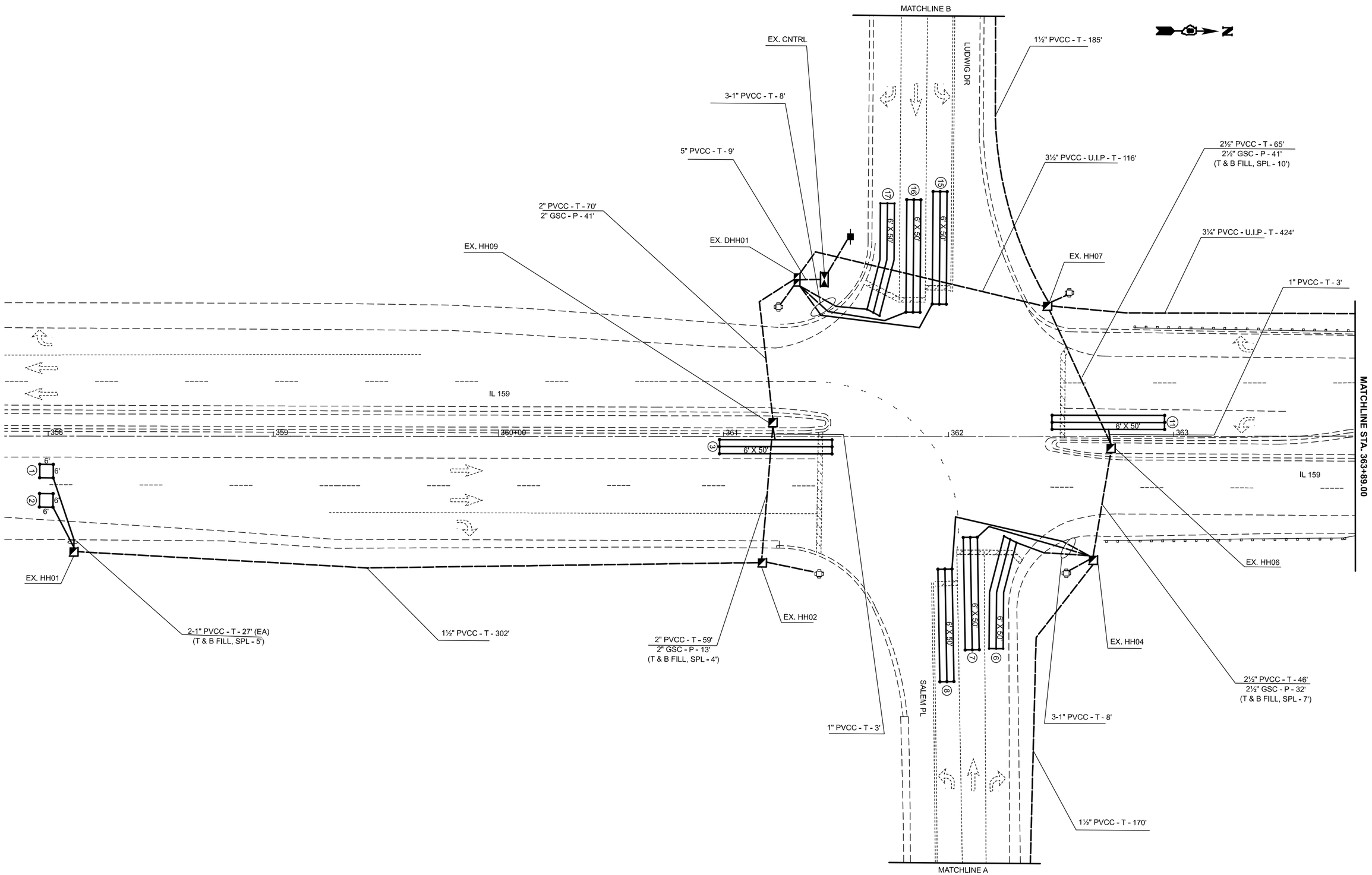

MODEL: Unnamed Plan-2 - DETECTOR LOOP-4 [Sheet]
FILE NAME: c:\pw_work\pwidot\illinois.gov_edison.zohfonyi@illinois.gov\d115787f\D876U95-TS.dgn1.dgn

USER NAME = edison.zohfonyi	DESIGNED -	REVISED -	
	DRAWN -	REVISED -	
	CHECKED -	REVISED -	
PLOT DATE = 9/19/2025	DATE -	REVISED -	

STATE OF ILLINOIS
DEPARTMENT OF TRANSPORTATION

DETECTOR LOOP REPLACEMENT PLAN
IL 159 AT LUWIG DR./SALEM PL

SCALE: 1"=20' | SHEET 5 OF 8 SHEETS | STA. | TO STA.

F.A.P RTE.	SECTION	COUNTY	TOTAL SHEETS	SHEET NO.
600	(130-1, 130-2)RS-4	ST. CLAIR	36	32

CONTRACT NO. 76U95

ILLINOIS | FED. AID PROJECT

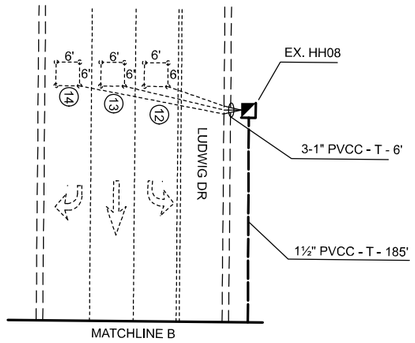

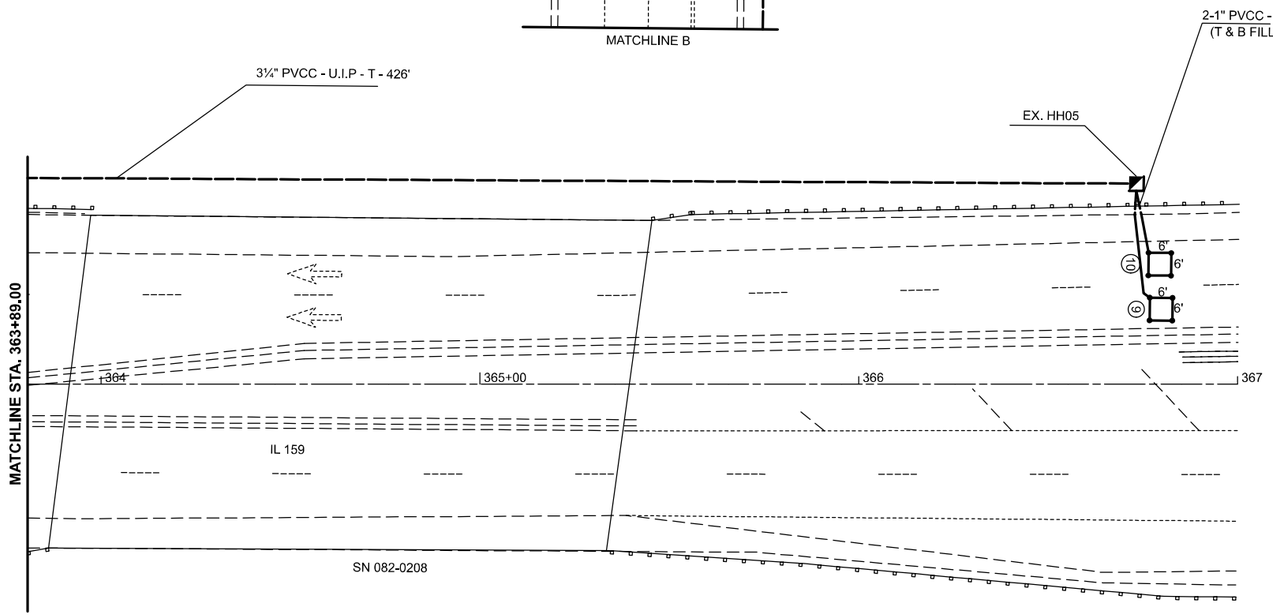

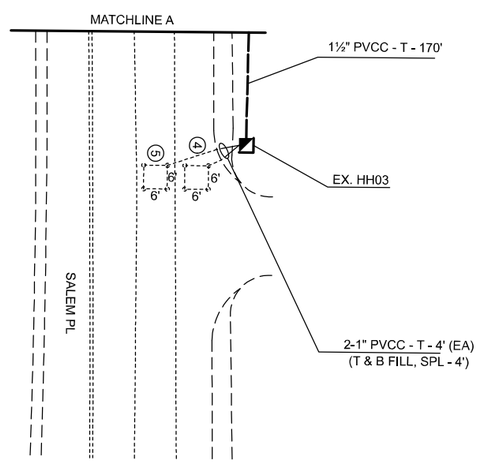

LOOP	PHASE (Φ)	LOOP SIZE (FT. X FT.)	REQUIRED # OF TURNS	CACULATED INDUCTANCE MICROHENRIES (μH)	CALCULATED RESISTANCE OHMS (Ω)
1. NB CCO	6	6' X 6'	6	365.98	2.89
2. NB CCO	6	6' X 6'	6	364.22	2.85
3. NB LT CD	1	6' X 50'(Q)	3-6-3	809.1	2.12
4. WB CCO	3	6' X 6'	6	354.98	2.64
5. WB CCO	3	6' X 6'	6	357.18	2.69
6. WB RT CD		6' X 50'(Q)	3-6-3	852.44	3.1
7. WB THRU CD	3	6' X 50'(Q)	3-6-3	856.84	3.2
8. WB LT CD	3	6' X 50'(Q)	3-6-3	863.88	3.36
9. SB CCO	2	6' X 6'	6	388.2	3.39
10. SB CCO	2	6' X 6'	6	385.34	3.33
11. SB LT CD	5	6' X 50'(Q)	3-6-3	835.06	2.71
12. EB CCO	4	6' X 6'	6	333.42	2.15
13. EB CCO	4	6' X 6'	6	335.84	2.2
14. EB CCO	4	6' X 6'	6	338.48	2.26
15. EB LT CD	4	6' X 50'(Q)	3-6-3	806.68	2.06
16. EB THRU CD	4	6' X 50'(Q)	3-6-3	802.5	1.97
17. EB RT CD		6' X 50'(Q)	3-6-3	798.88	1.86

THE ABOVE VALUES ARE CALCULATED OF COMBINED LOOP AND LEAD-IN INDUCTANCEAND RESISTANCE. ACTUAL MEASURED VALUES SHOULD BE WITHIN +/- 20% OF THESE VALUES.
(Q)=QUADRAPOLE

MODEL: Unnamed Plan-2 - DETECTOR LOOP-5 [Sheet]
FILE NAME: c:\pw_work\pwidot\illinois.gov_edison.zohfonyi@illinois.gov\d1157876\D876U95-TS.dgn1.dgn

USER NAME = edison.zohfonyi	DESIGNED -	REVISED -	
	DRAWN -	REVISED -	
	CHECKED -	REVISED -	
PLOT DATE = 9/19/2025	DATE -	REVISED -	

STATE OF ILLINOIS
DEPARTMENT OF TRANSPORTATION

DETECTOR LOOP REPLACEMENT PLAN
IL 159 AT LUWIG DR./SALEM PL

SCALE: 1"=20' | SHEET 6 OF 8 SHEETS | STA. | TO STA.

F.A.P RTE.	SECTION	COUNTY	TOTAL SHEETS	SHEET NO.
600	(130-1, 130-2)RS-4	ST. CLAIR	36	33
		CONTRACT NO. 76U95		
		ILLINOIS FED. AID PROJECT		

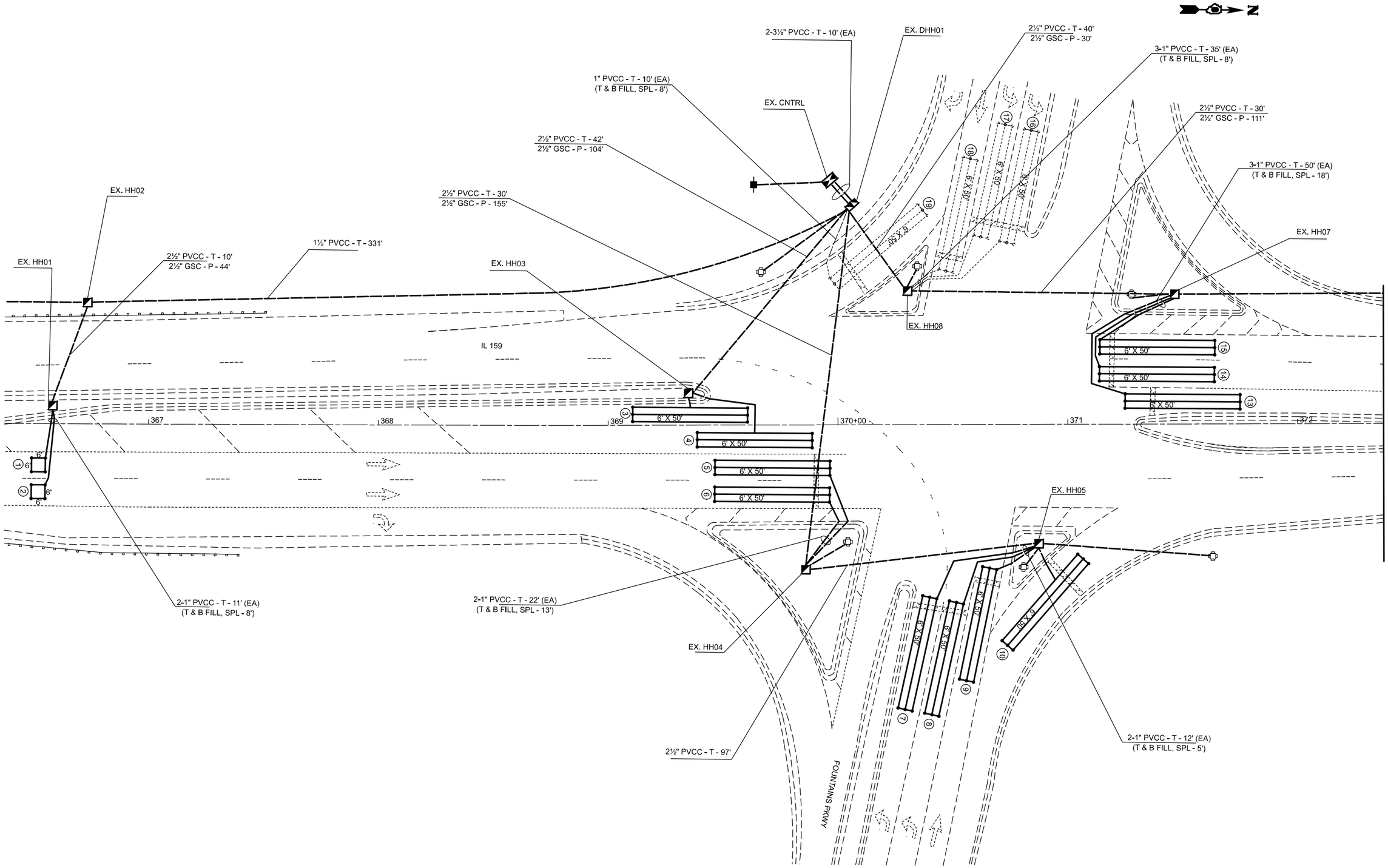

MODEL: Unnamed Plan-3 - DETECTOR LOOP-6 [Sheet]
FILE NAME: c:\pw_work\pwidot\illinois.gov_edison.zohfonyi@illinois.gov\d1157876\D876U95-TS.dgn1.dgn

USER NAME = edison.zohfonyi	DESIGNED -	REVISED -	
	DRAWN -	REVISED -	
	CHECKED -	REVISED -	
PLOT DATE = 9/19/2025	DATE -	REVISED -	

STATE OF ILLINOIS
DEPARTMENT OF TRANSPORTATION

DETECTOR LOOP REPLACEMENT PLAN
IL 159 AT FOUNTAINS PKWY

SCALE: 1"=20' | SHEET 7 OF 8 SHEETS | STA. | TO STA.

F.A.P RTE.	SECTION	COUNTY	TOTAL SHEETS	SHEET NO.
600	(130-1, 130-2)RS-4	ST. CLAIR	36	34
		CONTRACT NO. 76U95		
		ILLINOIS	FED. AID PROJECT	

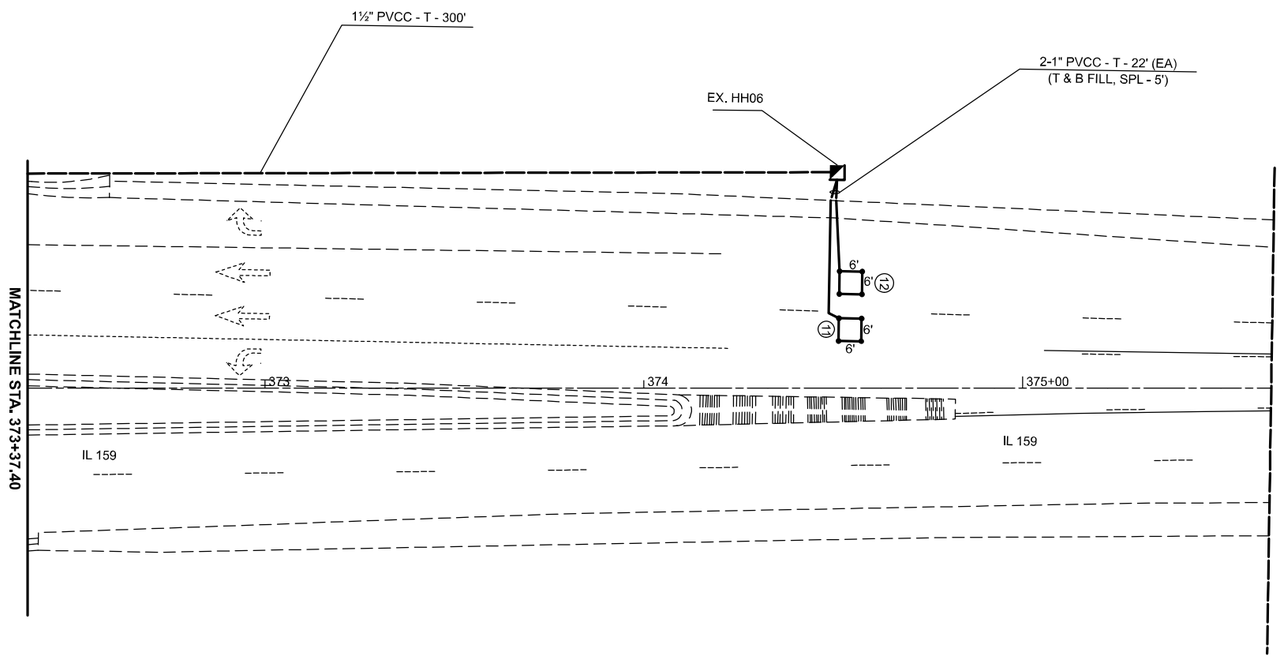

LOOP	PHASE (Φ)	LOOP SIZE (FT. X FT.)	REQUIRED # OF TURNS	CACULATED INDUCTANCE MICROHENRIES (μH)	CALCULATED RESISTANCE OHMS (Ω)
1. NB CCO	2	6' X 6'	6	349.92	2.52
2. NB CCO	2	6' X 6'	6	352.56	2.58
3. NB LT CD	5	6' X 50'(Q)	3-6-3	816.58	2.29
4. NB LT CD	5	6' X 50'(Q)	3-6-3	824.28	2.46
5. NB THRU CD	2	6' X 50'(Q)	3-6-3	837.58	2.75
6. NB THRU CD	2	6' X 50'(Q)	3-6-3	833.96	2.68
7. WB LT CD	3	6' X 50'(Q)	3-6-3	861.46	3.31
8. WB LT CD	8	6' X 50'(Q)	3-6-3	859.7	3.27
9. WB THRU CD	8	6' X 50'(Q)	3-6-3	854.2	3.14
10. WB RT LT	8	6' X 50'(Q)	3-6-3	853.1	3.12
11. SB CCO	6	6' X 6'	6	372.36	3.03
12. SB CCO	6	6' X 6'	6	369.28	2.96
13. SB LT CD	1	6' X 50'(Q)	3-6-3	843.86	2.91
14. SB THRU CD	6	6' X 50'(Q)	3-6-3	838.36	2.78
15. SB THRU CD	6	6' X 50'(Q)	3-6-3	835.5	2.72
~~16. EB LT CD~~	~~7~~	~~6' X 50'(Q)~~	~~3-6-3~~	~~811.74~~	~~2.17~~
~~17. EB LT CD~~	~~4~~	~~6' X 50'(Q)~~	~~3-6-3~~	~~810.42~~	~~2.15~~
~~18. EB THRU CD~~	~~4~~	~~6' X 50'(Q)~~	~~3-6-3~~	~~804.48~~	~~2.01~~
~~19. EB RT CD~~	~~4~~	~~6' X 50'(Q)~~	~~3-6-3~~	~~798.1~~	~~1.87~~

THE ABOVE VALUES ARE CALCULATED OF COMBINED LOOP AND LEAD-IN INDUCTANCEAND RESISTANCE. ACTUAL MEASURED VALUES SHOULD BE WITHIN +/- 20% OF THESE VALUES.
(Q)=QUADRAPOLE

MODEL: Unnamed Plan-3 - DETECTOR LOOP-7 [Sheet]
FILE NAME: c:\pw_work\pwidot\illinois.gov_edison.zohfonyi@illinois.gov\d1157876\D876U95-TS.dgn1.dgn

USER NAME = edison.zohfonyi	DESIGNED -	REVISED -	
	DRAWN -	REVISED -	
	CHECKED -	REVISED -	
PLOT DATE = 9/19/2025	DATE -	REVISED -	

STATE OF ILLINOIS
DEPARTMENT OF TRANSPORTATION

DETECTOR LOOP REPLACEMENT PLAN
IL 159 AT FOUNTAINS PKWY

SCALE: 1"=20' | SHEET 8 OF 8 SHEETS | STA. | TO STA.

F.A.P RTE.	SECTION	COUNTY	TOTAL SHEETS	SHEET NO.
600	(130-1, 130-2)RS-4	ST. CLAIR	36	35
		CONTRACT NO. 76U95		
		ILLINOIS FED. AID PROJECT		

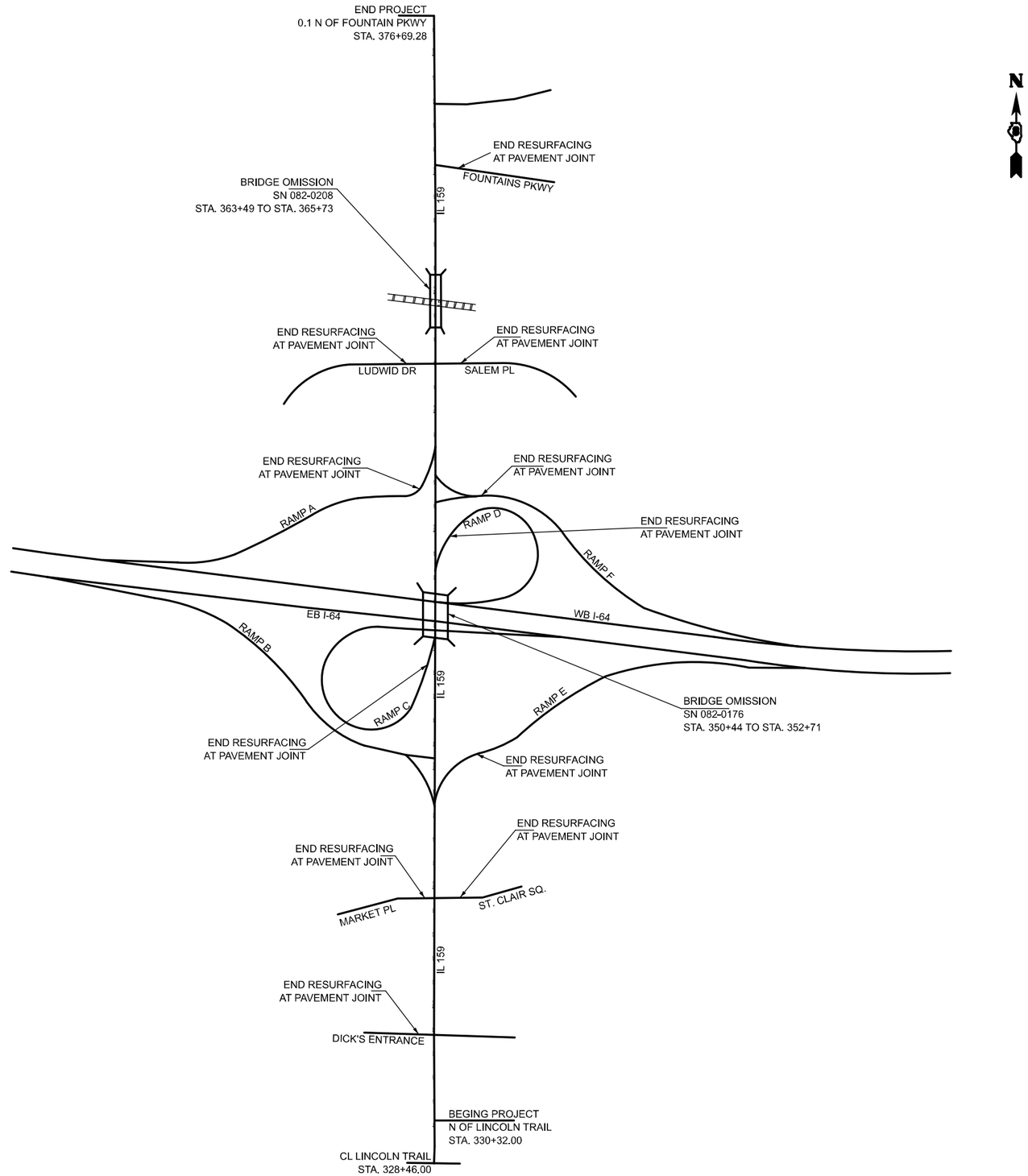

NOT TO SCALE

MODEL: Location Map [Sheet]
FILE NAME: c:\pw_work\pwidot\illinois.gov_edison.zohfonyi@illinois.gov\d1157876\D876U95-sht-plan.dgn

USER NAME = edison.zohfonyi	DESIGNED -	REVISED -	
	DRAWN -	REVISED -	
	CHECKED -	REVISED -	
PLOT DATE = 9/12/2025	DATE -	REVISED -	

STATE OF ILLINOIS
DEPARTMENT OF TRANSPORTATION

LOCATION MAP

SCALE: NTS | SHEET 1 OF 3 SHEETS | STA. | TO STA.

F.A.P RTE.	SECTION	COUNTY	TOTAL SHEETS	SHEET NO.
600	(130-1, 130-2)RS-4	ST. CLAIR	36	36
		CONTRACT NO. 76U95		
	ILLINOIS	FED. AID PROJECT		