FOR INDEX OF SHEETS, SEE SHEET NO. 2

01-16-2026 LETTING ITEM 128

F.A.P. RTE.	SECTION	COUNTY	TOTAL SHEETS	SHEET NO.
0002	(103, 104)BR-1	MADISON	178*	1
		ILLINOIS	CONTRACT NO. 76N65	

* 178 + 1 = 179 TOTAL SHEETS

KENNETH K. YANG 062-055031 LICENSED PROFESSIONAL ENGINEER OF ILLINOIS

KENNETH K. YANG DATE
LICENSE EXPIRES 11 / 30 / 2025
SHEET RANGE 1 - 9
12 - 24
160 - 178

STATE OF ILLINOIS ANNA M. DUKES 081-005598 CHICAGO, ILLINOIS LICENSED STRUCTURAL ENGINEER

ANNA M. DUKES DATE
LICENSE EXPIRES 11 / 30 / 2026
SHEET RANGE 80 - 81
83 - 102
105 - 112
115 - 123
128 - 142
148 - 159

COLIN C. COAD 062-063250 LICENSED PROFESSIONAL ENGINEER OF ILLINOIS

COLIN C. COAD DATE
LICENSE EXPIRES 11 / 30 / 2025
SHEET RANGE 27 - 79

ERIC J. LINDEMANN 062-05870 LICENSED PROFESSIONAL ENGINEER OF ILLINOIS

ERIC J. LINDEMANN DATE
LICENSE EXPIRES 11 / 30 / 2025
SHEET RANGE 10
25 - 26

SHELLEY L. DINTELMAN 062-055901 LICENSED PROFESSIONAL ENGINEER OF ILLINOIS

SHELLEY L. DINTELMAN DATE
LICENSE EXPIRES 11 / 30 / 2025
SHEET RANGE 11

LICENSED STRUCTURAL ENGINEER ALEX C BENZ 081-007814 STATE OF ILLINOIS

ALEX C. BENZ DATE
LICENSE EXPIRES 11 / 30 / 2026
SHEET RANGE 82
103 - 104
113 - 114
124 - 127
143 - 147

STATE OF ILLINOIS
DEPARTMENT OF TRANSPORTATION

PROPOSED HIGHWAY PLANS

F.A.P. 2 (IL 3)
SECTION (103, 104)BR-1
PROJECT BR-KXQC(532)
C-98-002-25
BRIDGE SUPERSTRUCTURE REPLACEMENT
MADISON COUNTY

D-98-002-25

LOCATION OF SECTION INDICATED THUS:- -▬-

TRANSYSTEMS
1475 EAST WOODFIELD ROAD, SUITE 600
SCHAUMBURG, IL 60173
PHONE: (847) 605-9600
FAX: (847) 463-0565

PROJECT LOCATED IN THE CITY OF GRANITE CITY

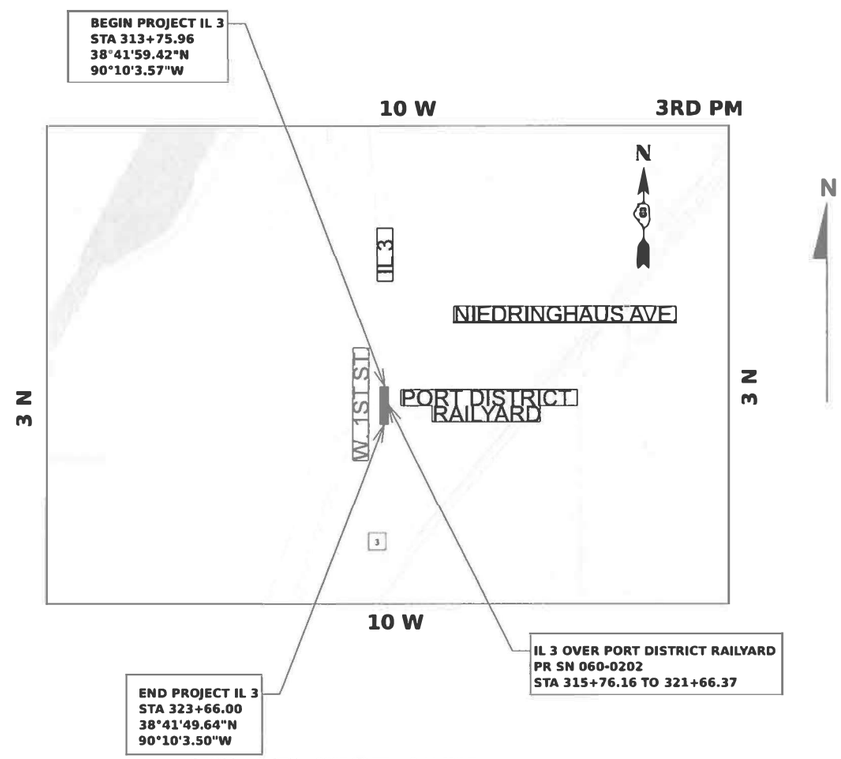

GROSS LENGTH = 2297.96 FT. = 0.44 MILE

NET LENGTH = 2297.96 FT. = 0.44 MILE

DESIGN DESIGNATION

IL ROUTE 3 - OTHER PRINCIPAL ARTERIAL (EXPRESSWAY)

TRAFFIC DATA

IL ROUTE 3 - OTHER PRINCIPAL ARTERIAL (EXPRESSWAY)
ADT: 11,700 (2023) SU 4.9%, MU 8.7%
POSTED SPEED: 55 MPH
DESIGN SPEED: 55 MPH

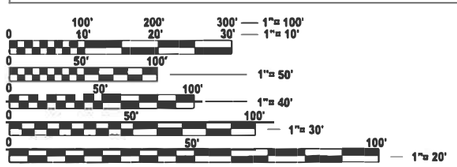

FULL SIZE PLANS HAVE BEEN PREPARED USING STANDARD ENGINEERING SCALES. REDUCED SIZED PLANS WILL NOT CONFORM TO STANDARD SCALES. IN MAKING MEASUREMENTS ON REDUCED PLANS, THE ABOVE SCALES MAY BE USED.

J.U.L.I.E.
JOINT UTILITY LOCATION INFORMATION FOR EXCAVATION
1-800-892-0123
OR 811

PROJECT ENGINEER: BILLIE OWEN
PROJECT MANAGER: MIKE BERG
CONTRACT NO. 76N65

STATE OF ILLINOIS
DEPARTMENT OF TRANSPORTATION

SUBMITTED Oct 16 20 25
REGIONAL ENGINEER

December 5 20 25
ENGINEER OF DESIGN AND ENVIRONMENT

December 5 20 25
DIRECTOR OF HIGHWAYS PROJECT IMPLEMENTATION

PRINTED BY THE AUTHORITY OF THE STATE OF ILLINOIS

REV - MS

INDEX OF SHEETS

HIGHWAY STANDARDS

000001-09	STANDARD SYMBOLS, ABBREVIATIONS, AND PATTERNS
001001-02	AREAS OF REINFORCEMENT BARS
001006	DECIMAL OF AN INCH AND OF A FOOT
280001-07	TEMPORARY EROSION CONTROL SYSTEMS
420001-11	PAVEMENT JOINTS
420106-07	36' JOINTED PCC PAVEMENT
420401-13	PAVEMENT CONNECTOR (PCC) FOR BRIDGE APPROACH SLAB
442201-04	CLASS C AND D PATCHES
482006-03	HMA SHOULDER ADJACENT TO RIGID PAVEMENT
483001-06	PCC SHOULDER
515001-04	NAME PLATE FOR BRIDGES
542301-03	PRECAST REINFORCED CONCRETE FLARED END SECTION
601001-05	PIPE UNDERDRAINS
606001-09	CONCRETE CURB TYPE B AND COMBINATION CONCRETE CURB AND GUTTER
606201-04	TYPE B GUTTER (INLET, OUTLET & ENTRANCE)
606301-04	PC CONCRETE ISLANDS AND MEDIANS
630001-13	STEEL PLATE BEAM GUARDRAIL
630301-09	SHOULDER WIDENING FOR TYPE 1 (SPECIAL) GUARDRAIL TERMINALS
631011-10	TRAFFIC BARRIER TERMINAL, TYPE 2
631026-06	TRAFFIC BARRIER TERMINAL, TYPE 5
631031-18	TRAFFIC BARRIER TERMINAL, TYPE 6
635001-02	DELINEATORS
637006-05	CONCRETE BARRIER DOUBLE FACE, 44 IN. (1120 mm) HEIGHT
664001-02	CHAIN LINK FENCE
701101-05	OFF-RD OPERATIONS, MULTILANE, 15'-24" FROM PAVEMENT EDGE
701106-02	OFF-RD OPERATIONS, MULTILANE, MORE THAN 15' AWAY
701400-12	APPROACH TO LANE CLOSURE, FREEWAY/EXPRESSWAY
701416-11	LANE CLOSURE FREEWAY EXPRESSWAY WITH CROSSOVER AND BARRIER
701422-10	LANE CLOSURE, MULTILANE, FOR SPEEDS ≥ 45 MPH TO 55 MPH
701426-09	LANE CLOSURE, MULTILANE, INTERMITTENT OR MOVING OPERATION, FOR SPEEDS ≥ 45 MPH
701446-11	TWO LANE CLOSURE FREEWAY EXPRESSWAY
701701-10	URBAN LANE CLOSURE, MULTILANE INTERSECTION
701901-11	TRAFFIC CONTROL DEVICES
704001-08	TEMPORARY CONCRETE BARRIER
780001-05	TYPICAL PAVEMENT MARKINGS
781001-04	TYPICAL APPLICATIONS RAISED REFLECTIVE PAVEMENT MARKERS
782006-01	GUARDRAIL AND BARRIER WALL REFLECTOR MOUNTING DETAILS
886001-01	DETECTOR LOOP INSTALLATIONS
886006-01	TYPICAL LAYOUT FOR DETECTION LOOPS
602402-03	PRECAST MANHOLE, TYPE A, 5' DIAMETER
604001-05	FRAME AND LIDS, TYPE 1

MIXTURE REQUIREMENTS

ROUTE	FAP 2 (IL 3)	ADT (Construction Yr)	11700
SECTION	(103, 104) BR-1	MU%:	8.7
COUNTY	Madison	SU%:	4.9
CONTRACT	76N65	20 YR. ESAL'S:	6.11

DESCRIPTION:	IL 3 on RR Yard at Army Depot in Granite City SN 060-0202

			TEMPORARY PAVEMENT		
MIXTURE USE	SHOULDER (lower)	SHOULDER (surface)	SURFACE	BINDER	
AC/PG	PG 64-22	PG 64-22	PG 64-22	PG 64-22	
DESIGN AIR VOIDS	4.0% @ Ndes=90	4.0% @ Ndes=90	4.0% @ Ndes=90	4.0% @ Ndes=90	
MIX COMPOSITION (Gradation)	IL 19.0	IL 9.5	IL 9.5	IL 19.0	
FRICTION AGG	MIXTURE "B"	MIXTURE "D"	MIXTURE "D"	MIXTURE "B"	
QUALITY MGMT PROGRAM	QC/QA	QC/QA	QC/QA	QC/QA	
MatTranDev Required?	NO	NO	NO	NO	

MIXTURE USE					
AC/PG					
DESIGN AIR VOIDS					
MIX COMPOSITION (Gradation)					
FRICTION AGG					
QUALITY MGMT PROGRAM					
MatTranDev Required?					

MIXTURE USE					
AC/PG					
DESIGN AIR VOIDS					
MIX COMPOSITION (Gradation)					
FRICTION AGG					
QUALITY MGMT PROGRAM					
MatTranDev Required?					

Plan quantities for Hot-Mix Asphalt items are calculated using a unit weight of 112 lb/sq yd/in (59.8 kg/sq m/25 mm thickness).
Any QCP Pay Item that has a quantity of 1600 tons or less will have two sublots each of which will be half of the Plan Quantity or half of the Adjusted Quantity by the Resident Engineer/Technician.

REV - MS

MODEL: Default
FILE NAME: pw://hq-pwint01.a-e.transyscorp.com:transyscorp-pw1/Documents/Projects_2020/CH401/401200165/Road/303.04 - Standard Sheets/01 - General/D876N65-sht-gennote2.dgn

TRANSYSTEMS

USER NAME = mbmcwhorter	DESIGNED - MBM	REVISED -	
	DRAWN - MBM	REVISED -	
	CHECKED - KKY	REVISED -	
PLOT DATE = 10/15/2025	DATE - 10/15/2025	REVISED -	

STATE OF ILLINOIS
DEPARTMENT OF TRANSPORTATION

ILLINOIS 3 OVER PORT DISTRICT RAILYARD
INDEX OF DRAWINGS AND HIGHWAY STANDARDS

SCALE: | SHEET 1 OF 1 SHEETS | STA. TO STA.

F.A.P RTE.	SECTION	COUNTY	TOTAL SHEETS	SHEET NO.
0002	(103,104)BR-1	MADISON	178	2
		CONTRACT NO. 76N65		

ILLINOIS | FED. AID PROJECT

GENERAL NOTES

1. ILLINOIS STATE LAW REQUIRES A 48-HOUR NOTICE TO BE GIVEN TO UTILITIES BEFORE DIGGING. FIELD MARKING OF FACILITIES MAY BE OBTAINED BY CONTACTING J.U.L.I.E. (1-800-892-0123 OR 811) OR FOR NON-MEMBERS THE UTILITY COMPANY DIRECTLY.

2. THE CONTRACTOR SHALL VERIFY ALL DIMENSIONS AND CONDITIONS IN THE FIELD PRIOR TO CONSTRUCTION AND ORDERING MATERIALS.

3. THE THICKNESS OF HOT-MIX ASPHALT SURFACE MIXTURES SHOWN ON THE PLANS IS THE NOMINAL THICKNESS. DEVIATIONS MAY OCCUR DUE TO IRREGULARITIES IN THE EXISTING SURFACE OR BASE ON WHICH THE BITUMINOUS MIXTURE IS PLACED.

4. THE VARIOUS THICKNESSES OF BITUMINOUS SURFACE REMOVAL SHOWN ON THE PLANS ARE THE AVERAGE THICKNESSES BASED UPON CONTROLLING THICKNESS AS INDICATED. DEVIATIONS FROM THE NOMINAL THICKNESS WILL BE PERMITTED WHEN SUCH DEVIATIONS OCCUR DUE TO IRREGULARITIES IN THE EXISTING SURFACE. BITUMINOUS SURFACE REMOVAL HAS BEEN INCLUDED IN THE PLANS FOR THE PURPOSE OF REMOVING HIGH IRREGULARITIES AND TO ESTABLISH CROSS SLOPE.

5. THE USE OF VIBRATORY ROLLERS WILL NOT BE PERMITTED WITHIN THE CITY LIMITS OF GRANITE CITY OR FOR THIS PROJECT. THIS DOES NOT RELIEVE THE CONTRACTOR OF DENSITY REQUIREMENTS FOR THE CONSTRUCTION OF THE BITUMINOUS PAVEMENTS AS SPECIFIED IN SECTIONS 406, 407, & 482 OF THE STANDARD SPECIFICATIONS.

6. REFER TO STANDARD SPECIFICATIONS ART. 107.12 FOR INFORMATION REGARDING RAILROAD FLAGGERS.

7. OVERNIGHT DROP-OFFS WILL NOT BE PERMITTED NEXT TO AN OPEN LANE OF TRAFFIC.

8. A QUANTITY OF 3,067 FEET OF TEMPORARY PAVEMENT MARKING LINE 6" WHITE HAS BEEN INCLUDED IN THE PLANS FOR PAINTING THE BOTTOM 6" OF THE TEMPORARY CONCRETE BARRIER.

9. IF THE CONTRACTOR, FOR THEIR CONSTRUCTION ACTIVITY, REMOVES TREES WITHIN THE RIGHT-OF-WAY LIMITS WHICH ARE NOT DESIGNATED ON THE PLANS FOR REMOVAL, I.E. IN ORDER TO GAIN ACCESS TO THE PROJECT SITE; IT WILL BE HIS RESPONSIBILITY TO REPLACE THE TREES AT A 1:1 RATIO. THE TREES WILL BE REPLACED WITH A 1 GALLON NATIVE ILLINOIS TREE SPECIES AND SHALL BE APPROVED BE THE ENGINEER. THE TREE REMOVAL AND TREE REPLACEMENT WILL BE AT THE CONTRACTOR'S EXPENSE, AND NO ADDITIONAL COMPENSATION WILL BE ALLOWED.

10. ALL EXISTING AND PROPOSED RIGHT-OF-WAY LINES AND PROPERTY LINES SHOWN ON THE PLANS SHEETS ARE GRAPHICAL REPRESENTATIONS AND SHALL NOT BE USED AS A MEANS TO ESTABLISH OWNERSHIP. IN ALL MATTERS RELATING TO RIGHT-OF-WAY, THE PLAT OF HIGHWAYS SHALL BE THE CONTROLLING DOCUMENT.

11. CONFLICTS MAY OCCUR BETWEEN THE ROADWAY PLANS AND RIGHT-OF-WAY PLAT OF HIGHWAYS. THE RIGHT-OF-WAY PLATS SHALL TAKE PRECEDENCE IN CONFLICTS IN RIGHT-OF-WAY OR EASEMENTS. THE ROADWAY PLANS SHALL TAKE PRECEDENCE IN ITEMS FOR CONSTRUCTION.

12. THE RESIDENT ENGINEER SHALL VERIFY THE EXISTENCE OF HIGHWAY LIGHTING AND/OR INTELLIGENT TRANSPORTATION SYSTEMS (I.T.S.) UTILITIES WITHIN THE PROJECT LIMITS. IF HIGHWAY LIGHTING AND/OR I.T.S. EXISTS WITHIN THE PROJECT LIMITS, AND IF THESE ITEMS REQUIRE LOCATING, THE CONTRACTOR SHALL BE DIRECTED TOO DO SO ACCORDING TO SECTION 803 OF THE STANDARD SPECIFICATIONS. THIS WORK SHALL BE PAID FOR ACCORDING TO ARTICLE 109.04 OF THE STANDARD SPECIFICATIONS.

13. TWO CHANGEABLE MESSAGE BOARDS SHALL BE REQUIRED FOR THIS PROJECT. THEY SHALL BE PLACED ONE WEEK PRIOR TO ANY LANE CLOSURE. THE CHANGEABLE MESSAGE BOARDS SHALL BE PLACED ALONG ILLINOIS 3 AT THE DIRECTION OF THE RESIDENT ENGINEER.

14. THE CONTRACTOR SHALL PROVIDE POSITIVE AND ADEQUATE DRAINAGE AT ALL LOCATIONS AT ALL TIMES. THIS MAY INCLUDE, BUT IS NOT LIMITED TO, REPLACEMENT OR RECONSTRUCTION OF EXISTING DRAINAGE STRUCTURES THAT HAVE BEEN DAMAGED OR REMOVED, REGARDING, PLUGGING ABANDONED PIPES, OR OTHER ACTIVITIES REQUIRED BY THE ENGINEER.

15. THE DEPARTMENT STRONGLY ENCOURAGES THE PRIME CONTRACTOR AND THEIR APPROVED SUBCONTRACTORS TO HIRE MINORITY, WOMEN AND DISADVANTAGED INDIVIDUALS FROM ITS FEDERALLY FUNDED HIGHWAY CONSTRUCTION CAREERS TRAINING PROGRAM (HCCTP) TO HELP MEET WORKFORCE AND TRAINEE GOALS. THIS PROGRAM IS TRAINING MINORITIES, WOMEN AND DISADVANTAGED INDIVIDUALS IN HIGHWAY CONSTRUCTION RELATED SKILLS, E.G., MATH FOR THE TRADES, JOB READINESS, TECHNICAL SKILLS COURSE WORK (CARPENTRY, CONCRETE FLATWORK, BLUEPRINT READING, SITE PLANS, SITE WORK, TOOLS USE, ETC.) AND OSHA 10 HOUR CERTIFICATION TO PREPARE THEM FOR A CAREER IN THE HIGHWAY CONSTRUCTION TRADES. GRADUATES ARE WELL TRAINED AND READY TO BECOME PRODUCTIVE ENTRY-LEVEL CONSTRUCTION WORKERS. CONTACT THE DISTRICT 8 EEO OFFICE AT 618-346-3360 AND/OR THE HCCTP COORDINATOR AT 619-874-6528 TO LEARN MORE ABOUT THE PROGRAM AND FOR ASSISTANCE IN MEETING WORKFORCE AND TRAINEE GOALS.

16. ALL ELEVATIONS SHOWN ON THE PLANS REFER TO NAVD88 UNLESS OTHERWISE NOTED.

17. EXISTING STRUCTURE PLANS ARE AVAILABLE FOR REVIEW IN THE DISTRICT OFFICE. CONTACT DIANA MURRAY AT 618-346-3207.

18. THE CONTRACTOR SHALL PLACE PERIMETER EROSION BARRIER AROUND ALL EARTH STOCKPILES.

19. THE INTENT OF THE MILLING IS TO REMOVE THE HMA RESURFACING ONLY.

20. SAW CUTTING OF PAVEMENTS SHALL BE TO FULL DEPTH AND SHALL RESULT IN A CLEAN, STRAIGHT EDGE ON THE PORTION REMAINING. THE COST OF ALL SAW CUTTING SHALL BE CONSIDERED TO BE INCLUDED IN THE COST OF THE ITEM REMOVED.

21. ALL NEW TRAFFIC BARRIER TERMINALS SHALL BE CORED. CORING METHODS SHALL BE USED TO PREVENT DAMAGE TO PROPOSED PAVEMENTS AND CONCRETE STRUCTURES VIA DRILLING. NO DRILLING WILL BE PERMITTED INTO THE PARAPET WALLS, MEDIANS, PIERS, ETC. ACCORDING TO ARTICLE 631. FOR THIS WORK, ANY DAMAGE TO THE PARAPET WALLS, MEDIANS, PIERS, ETC. WILL BE THE RESPONSIBILITY OF THE CONTRACTOR TO REPAIR AT THEIR OWN EXPENSE.

22. THE CONTRACTOR SHALL PROVIDE LABOR AND MATERIALS REQUIRED TO IMPRINT PAVEMENT STATION NUMBERS IN THE FINISHED SURFACE OF THE PAVEMENT AND/OR OVERLAY, THE NUMBERS SHALL BE APPROXIMATELY 3/4" WIDE AND 5" HEIGHT AND 5/8" DEEP.

    THE PAVEMENT STATION NUMBERS SHALL BE INSTALLED AS SPECIFIED HEREIN:

    INTERVAL - 250 FEET

    BOTTOM OF NUMBERS - 6" FROM THE INSIDE EDGE OF THE PAVEMENT MARKING

    LOCATION:
    a. MULTI-LANE DIVIDED ROADWAYS - OUTSIDE EDGE OF PAVEMENT IN BOTH DIRECTIONS

    STATIONS SHALL BE PLACED SO THEY CAN BE READ FROM THE ADJACENT SHOULDER

    STATION LABELS SHALL FOLLOW THE FOLLOWING FORMAT: "XX+XX", WHERE X REPRESENTS THE PAVEMENT STATION

    THE STAMPED STATIONS SHALL BE FILLED WITH SAND IMMEDIATELY AFTER STAMPING AND PRIOR TO ADDITIONAL ROLLING.

    THIS WORK WILL NOT BE PAID FOR SEPARATELY, BUT WILL BE CONSIDERED INCLUDED IN THE COST OF THE ASSOCIATED PAVEMENT AND/OR OVERLAY PAY ITEMS.

23. FACTORS FOR ESTIMATING PLAN QUANTITIES ARE AS FOLLOWS AND SHALL NOT BE USED FOR THE BASIS OF FINAL QUANTITIES:

HOT-MIX ASPHALT BASE COURSE	0.056 TON/SQ YD/IN
HOT-MIX ASPHALT SURFACE COURSE	0.056 TON/SQ YD/IN
AGGREGATE (SURFACE, BASE, & BACKFILL)	2.05 TON/CU YD
BITUMINOUS MATERIALS:	
PRIME COAT FOR BITUMINOUS CONCRETE:	
ON PAVEMENT	0.0002 TON/SQ YD/IN
ON AGGREGATE	0.002 TON/SQ YD
ON COLD MILLED SURFACE	0.0004 TON/SQ YD
FOG COAT ON NEW BINDER	0.00012 TON/SQ YD
AGGREGATE (PRIME COAT)	
ON EXISTING PAVEMENT	0.002 TON/SQ YD
ON COLD MILLED SURFACE	0.002 TON/SQ YD
FOG COAT ON NEW BINDER	0.001 TON/SQ YD
RIP RAP	1.5 TON/CU YD
SEEDING, CLASS 2A, 4A	200 LB/ACRE
TEMPORARY EROSION CONTROL SEEDING	100 LB/ACRE
NITROGEN FERTILIZER NUTRIENT	90 LB/ACRE
PHOSPHORUS FERTILIZER NUTRIENT	90 LB/ACRE
POTASSIUM FERTILIZER NUTRIENT	90 LB/ACRE
MULCH	2 TON/ACRE

24. CONTRACTOR ACCESS WILL BE LIMITED TO THE IMMEDIATE PROJECT AREA ONLY. THE PORT DISTRICT RAILYARD PROPERTY OUTSIDE THE PROJECT AREA WILL NOT BE USED FOR CONTRACTOR ACCESS TO THE PROJECT SITE.

COMMITMENTS

1. THE CONTRACTOR SHALL COORDINATE WITH PORT DISTRICT RAILYARD AUTHORITIES IF ANY CHANGES ARE MADE TO THE MAINTENANCE OF TRAFFIC PLAN PROPOSED IN PLANS.

2. THE CONTRACTOR SHALL POST SIGNAGE TO INDICATE CLOSURE OF THE MADISON COUNTY TRANSIT CONFLUENCE TRAIL (BIKE PATH) ONCE THE TRAIL IS CLOSED. SIGNAGE SHALL ALSO BE POSTED SHOWING THE PEDESTRIAN DETOUR VIA THE NIEDRINGHAUS ROAD INTERSECTION. ANY COORDINATION WITH MADISON COUNTY TRANSIT (MCT) SHALL BE THROUGH THE FOLLOWING CONTACT:

    ROBERT SCHMIDT
    MCT FACILITY DIRECTOR
    AGENCY FOR COMMUNITY TRANSIT
    618-797-4600

CODE NUMBER	PAY ITEM	UNIT	TOTAL QUANTITY	CONSTRUCTION CODE 80% FEDERAL 20% STATE BRIDGE 0013 SN 060-0202
20200100	EARTH EXCAVATION	CU YD	1,415	1,415
20201200	REMOVAL AND DISPOSAL OF UNSUITABLE MATERIAL	CU YD	185	185
20400800	FURNISHED EXCAVATION	CU YD	685	685
20800150	TRENCH BACKFILL	CU YD	15	15
21400100	GRADING AND SHAPING DITCHES	FOOT	319.0	319.0
25000210	SEEDING, CLASS 2A	ACRE	1.00	1.00
25000400	NITROGEN FERTILIZER NUTRIENT	POUND	57.0	57.0
25000500	PHOSPHORUS FERTILIZER NUTRIENT	POUND	57.0	57.0
25000600	POTASSIUM FERTILIZER NUTRIENT	POUND	57.0	57.0
25100630	EROSION CONTROL BLANKET	SQ YD	3,011	3,011
28000250	TEMPORARY EROSION CONTROL SEEDING	POUND	195.3	195.3
28000305	TEMPORARY DITCH CHECKS	FOOT	90	90
28000400	PERIMETER EROSION BARRIER	FOOT	3,085	3,085
28000510	INLET FILTERS	EACH	40	40

CODE NUMBER	PAY ITEM	UNIT	TOTAL QUANTITY	CONSTRUCTION CODE 80% FEDERAL 20% STATE BRIDGE 0013 SN 060-0202
28001100	TEMPORARY EROSION CONTROL BLANKET	SQ YD	9,418	9,418
28100107	STONE RIPRAP, CLASS A4	SQ YD	415	415
28200200	FILTER FABRIC	SQ YD	1,655	1,655
30300112	AGGREGATE SUBGRADE IMPROVEMENT 12"	SQ YD	3,041	3,041
31100300	SUBBASE GRANULAR MATERIAL, TYPE A 4"	SQ YD	3,041	3,041
35101100	AGGREGATE BASE COURSE, TYPE A 12"	SQ YD	25	25
42000080	PAVEMENT CONNECTOR (PCC) FOR BRIDGE APPROACH SLAB	SQ YD	511	511
42000405	PORTLAND CEMENT CONCRETE PAVEMENT 9 ¼"	SQ YD	2,399	2,399
42001300	PROTECTIVE COAT	SQ YD	3,868	3,868
44000100	PAVEMENT REMOVAL	SQ YD	2,870	2,870
44000300	CURB REMOVAL	FOOT	1,858	1,858
44000500	COMBINATION CURB AND GUTTER REMOVAL	FOOT	2,271	2,271
44001980	CONCRETE BARRIER REMOVAL	FOOT	2,920	2,920
44004250	PAVED SHOULDER REMOVAL	SQ YD	1,352	1,352

REV - MS

CODE NUMBER	PAY ITEM	UNIT	TOTAL QUANTITY	CONSTRUCTION CODE 80% FEDERAL 20% STATE BRIDGE 0013 SN 060-0202
44201337	CLASS C PATCHES, TYPE I, 9 INCH	SQ YD	18	18
44201345	CLASS C PATCHES, TYPE III, 9 INCH	SQ YD	20	20
48203029	HOT-MIX ASPHALT SHOULDERS, 8"	SQ YD	671	671
48300405	PORTLAND CEMENT CONCRETE SHOULDERS 9 ¼"	SQ YD	753	753
50101500	REMOVAL OF EXISTING SUPERSTRUCTURES	EACH	1	1
50102400	CONCRETE REMOVAL	CU YD	340.1	340.1
50104650	SLOPE WALL REMOVAL	SQ YD	928	928
50157300	PROTECTIVE SHIELD	SQ YD	6,845	6,845
50200100	STRUCTURE EXCAVATION	CU YD	722	722
50300225	CONCRETE STRUCTURES	CU YD	1,009.9	1,009.9
50300255	CONCRETE SUPERSTRUCTURE	CU YD	2,257.8	2,257.8
50300300	PROTECTIVE COAT	SQ YD	8,643	8,643
50301350	CONCRETE SUPERSTRUCTURE (APPROACH SLAB)	CU YD	283.2	283.2
50401305	FURNISHING AND ERECTING PRECAST PRESTRESSED CONCRETE BEAMS, IL27N	FOOT	8,097.0	8,097.0

CODE NUMBER	PAY ITEM	UNIT	TOTAL QUANTITY	CONSTRUCTION CODE 80% FEDERAL 20% STATE BRIDGE 0013 SN 060-0202
50800205	REINFORCEMENT BARS, EPOXY COATED	POUND	884,140	884,140
50800515	BAR SPLICERS	EACH	36	36
51100100	SLOPE WALL 4 INCH	SQ YD	1,356	1,356
51500100	NAME PLATES	EACH	1.0	1.0
52000030	PREFORMED JOINT SEAL 2-1/2"	FOOT	1,302	1,302
52000110	PREFORMED JOINT STRIP SEAL	FOOT	210.0	210.0
52100010	ELASTOMERIC BEARING ASSEMBLY, TYPE I	EACH	238	238
52100510	ANCHOR BOLTS, ¾"	EACH	28	28
52100520	ANCHOR BOLTS, 1"	EACH	476	476
52200010	TEMPORARY SHEET PILING	SQ FT	794.0	794.0
54248510	CONCRETE COLLAR	CU YD	1	1
550A0340	STORM SEWERS, CLASS A, TYPE 2 12"	FOOT	6	6
550A0360	STORM SEWERS, CLASS A, TYPE 2 15"	FOOT	22	22
550A0410	STORM SEWERS, CLASS A, TYPE 2 24"	FOOT	6	6
55100500	STORM SEWER REMOVAL 12"	FOOT	6	6

REV - MS

MODEL: Default
FILE NAME: pw://hq-pwim01.a-e.transyscorp.com:transyscorp-pw1/Documents/Projects_2020/CH401/401200165/Road/303.04 - Standard Sheets/01 - General/D876N65-sht-SOQ.dgn

TRANSYSTEMS

USER NAME = mbmcwhorter	DESIGNED - MBM	REVISED -	
	DRAWN - MBM	REVISED -	
	CHECKED - KKY	REVISED -	
PLOT DATE = 10/15/2025	DATE - 10/15/2025	REVISED -	

STATE OF ILLINOIS
DEPARTMENT OF TRANSPORTATION

ILLINOIS 3 OVER PORT DISTRICT RAILYARD
SUMMARY OF QUANTITIES

SCALE: | SHEET 2 OF 5 SHEETS | STA. TO STA.

F.A.P RTE.	SECTION	COUNTY	TOTAL SHEETS	SHEET NO.
0002	(103,104)BR-1	MADISON	178	5

CONTRACT NO. 76N65

ILLINOIS | FED. AID PROJECT

	CODE NUMBER	PAY ITEM	UNIT	TOTAL QUANTITY	CONSTRUCTION CODE 80% FEDERAL 20% STATE BRIDGE 0013 SN 060-0202
	55100700	STORM SEWER REMOVAL 15"	FOOT	22	22
	55101200	STORM SEWER REMOVAL 24"	FOOT	6	6
	58600101	GRANULAR BACKFILL FOR STRUCTURES	CU YD	384	384
	58700300	CONCRETE SEALER	SQ FT	3,236.0	3,236.0
	59000200	EPOXY CRACK INJECTION	FOOT	4	4
	59100100	GEOCOMPOSITE WALL DRAIN	SQ YD	202	202
	60100060	CONCRETE HEADWALLS FOR PIPE DRAINS	EACH	4	4
	60146304	PIPE UNDERDRAINS FOR STRUCTURES 4"	FOOT	282	282
	60500060	REMOVING INLETS	EACH	12	12
	60600605	CONCRETE CURB, TYPE B	FOOT	1,086.5	1,086.5
	60618320	CONCRETE MEDIAN SURFACE, 6 INCH	SQ FT	1,747	1,747
	60622400	CONCRETE MEDIAN, TYPE SM-6.06	SQ FT	2,289.5	2,289.5
*	63000001	STEEL PLATE BEAM GUARDRAIL, TYPE A, 6 FOOT POSTS	FOOT	2,237.5	2,237.5
*	63100045	TRAFFIC BARRIER TERMINAL, TYPE 2	EACH	2	2

	CODE NUMBER	PAY ITEM	UNIT	TOTAL QUANTITY	CONSTRUCTION CODE 80% FEDERAL 20% STATE BRIDGE 0013 SN 060-0202
*	63100070	TRAFFIC BARRIER TERMINAL, TYPE 5	EACH	2	2
*	63100085	TRAFFIC BARRIER TERMINAL, TYPE 6	EACH	2	2
*	63100167	TRAFFIC BARRIER TERMINAL, TYPE 1 (SPECIAL) TANGENT	EACH	2	2
	63200310	GUARDRAIL REMOVAL	FOOT	2,181	2,181
	63700280	CONCRETE BARRIER, DOUBLE FACE, 44 INCH HEIGHT	FOOT	1,029	1,029
	63700900	CONCRETE BARRIER BASE	FOOT	1,116	1,116
	63800920	MODULAR GLARE SCREEN SYSTEM, TEMPORARY	FOOT	2,749	2,749
	64300770	IMPACTATTENUATORS (SEVERE USE, NARROW), TEST LEVEL 3	EACH	1	1
	66400305	CHAIN LINK FENCE, 6'	FOOT	728	728
	66402900	CHAIN LINK GATES, 6' X 6' SINGLE	EACH	4	4
*	66900200	NON-SPECIAL WASTE DISPOSAL	CU YD	650	650
*	66900530	SOIL DISPOSAL ANALYSIS	EACH	2	2
*	66901001	REGULATED SUBSTANCES PRE-CONSTRUCTION PLAN	L SUM	1	1

* SPECIALTY ITEM

REV - MS

MODEL: Default
FILE NAME: pw://hq-pwint01.a-e.transyscorp.com:transyscorp-pw1/Documents/Projects_2020/CH401/401200165/Road/303.04 - Standard Sheets/01 - General/D876N65-sht-SOQ.dgn

TRANSYSTEMS

USER NAME = mbmcwhorter	DESIGNED - MBM	REVISED -	
	DRAWN - MBM	REVISED -	
	CHECKED - KKY	REVISED -	
PLOT DATE = 10/15/2025	DATE - 10/15/2025	REVISED -	

STATE OF ILLINOIS
DEPARTMENT OF TRANSPORTATION

ILLINOIS 3 OVER PORT DISTRICT RAILYARD
SUMMARY OF QUANTITIES

SCALE: | SHEET 3 OF 5 SHEETS | STA. | TO STA.

F.A.P RTE.	SECTION	COUNTY	TOTAL SHEETS	SHEET NO.
0002	(103,104)BR-1	MADISON	178	6

CONTRACT NO. 76N65

ILLINOIS | FED. AID PROJECT

	CODE NUMBER	PAY ITEM	UNIT	TOTAL QUANTITY	CONSTRUCTION CODE 80% FEDERAL 20% STATE BRIDGE 0013 SN 060-0202
*	66901003	REGULATED SUBSTANCES FINAL CONSTRUCTION REPORT	L SUM	1	1
*	66901006	REGULATED SUBSTANCES MONITORING	CAL DA	10	10
	67000400	ENGINEER'S FIELD OFFICE, TYPE A	CAL MO	8	8
	67100100	MOBILIZATION	L SUM	1	1
	70103815	TRAFFIC CONTROL SURVEILLANCE	CAL DA	540	540
	70107025	CHANGEABLE MESSAGE SIGN	CAL DA	56	56
	70300241	TEMPORARY PAVEMENT MARKING - LINE 6"- PAINT	FOOT	4,240	4,240
	70307100	TEMPORARY PAVEMENT MARKING LETTERS AND SYMBOLS - TYPE IV TAPE	SQ FT	256	256
	70307130	TEMPORARY PAVEMENT MARKING - LINE 6" - TYPE IV TAPE	FOOT	60,495	60,495
	70307160	TEMPORARY PAVEMENT MARKING - LINE 12"- TYPE IV TAPE	FOOT	229	229
	70307210	TEMPORARY PAVEMENT MARKING - LINE 24"- TYPE IV TAPE	FOOT	12	12
	70400100	TEMPORARY CONCRETE BARRIER	FOOT	3,400	3,400
	70400125	PINNING TEMPORARY CONCRETE BARRIER	EACH	474	474
	70400200	RELOCATE TEMPORARY CONCRETE BARRIER	FOOT	2,988	2,988

	CODE NUMBER	PAY ITEM	UNIT	TOTAL QUANTITY	CONSTRUCTION CODE 80% FEDERAL 20% STATE BRIDGE 0013 SN 060-0202
	70600250	IMPACT ATTENUATORS, TEMPORARY (NON- REDIRECTIVE), TEST LEVEL 3	EACH	2	2
	70600350	IMPACT ATTENUATORS, RELOCATE (NON- REDIRECTIVE), TEST LEVEL 3	EACH	1	1
*	72400205	REMOVE AND RELOCATE SIGN PANEL ASSEMBLY - TYPE A	EACH	9	9
*	72400210	REMOVE AND RELOCATE SIGN PANEL ASSEMBLY - TYPE B	EACH	2	2
*	78006100	PREFORMED THERMOPLASTIC PAVEMENT MARKING - LETTERS AND SYMBOLS	SQ FT	128	128
*	78006130	PREFORMED THERMOPLASTIC PAVEMENT MARKING - LINE 6"	FOOT	22,504	22,504
*	78006150	PREFORMED THERMOPLASTIC PAVEMENT MARKING - LINE 12"	FOOT	43	43
*	78006180	PREFORMED THERMOPLASTIC PAVEMENT MARKING - LINE 24"	FOOT	96	96
*	78009006	MODIFIED URETHANE PAVEMENT MARKING - LINE 6"	FOOT	4,950	4,950
*	78100100	RAISED REFLECTIVE PAVEMENT MARKER	EACH	428	428
*	78200005	GUARDRAIL REFLECTORS, TYPE A	EACH	46	46
*	78200010	BARRIER WALL REFLECTORS, TYPE B	EACH	60	60
	78300200	RAISED REFLECTIVE PAVEMENT MARKER REMOVAL	EACH	478	478
	78300202	PAVEMENT MARKING REMOVAL - WATER BLASTING	SQ FT	7,465	7,465

* SPECIALTY ITEM

	CODE NUMBER	PAY ITEM	UNIT	TOTAL QUANTITY	CONSTRUCTION CODE 80% FEDERAL 20% STATE BRIDGE 0013 SN 060-0202
*	81028200	UNDERGROUND CONDUIT, GALVANIZED STEEL, 2" DIA.	FOOT	75	75
*	85000200	MAINTENANCE OF EXISTING TRAFFIC SIGNAL INSTALLATION	EACH	1	1
*	88600100	DETECTOR LOOP, TYPE I	FOOT	265	265
	X4400110	TEMPORARY PAVEMENT REMOVAL	SQ YD	618	618
	X4402400	CURB REMOVAL (SPECIAL)	FOOT	56	56
	X4402815	ISLAND PAVEMENT REMOVAL AND REPLACEMENT	SQ FT	32	32
	X4403300	CONCRETE MEDIAN REMOVAL	SQ FT	1,870	1,870
	X5030250	BRIDGE DECK GROOVING (LONGITUDINAL)	SQ YD	5,198	5,198
	X5080530	BAR TERMINATORS	EACH	1,212	1,212
	X5230174	DRAINAGE SCUPPERS, DS-11	EACH	4	4
	X5537800	STORM SEWERS TO BE CLEANED 12"	FOOT	179	179
	X5538200	STORM SEWERS TO BE CLEANED 24"	FOOT	61	61
	X6010003	PIPE DRAIN REMOVAL	FOOT	682	682
	X6020086	MANHOLE, SPECIAL, FRAME AND LID	EACH	1	1

* SPECIALTY ITEM

	CODE NUMBER	PAY ITEM	UNIT	TOTAL QUANTITY	CONSTRUCTION CODE 80% FEDERAL 20% STATE BRIDGE 0013 SN 060-0202
	X6640300	CHAIN LINK FENCE REMOVAL	FOOT	728	728
	X6370700	CONCRETE BARRIER TRANSITION (SPECIAL)	FOOT	28	28
	X7010216	TRAFFIC CONTROL AND PROTECTION, (SPECIAL)	L SUM	1	1
	X7200201	WIDTH RESTRICTION SIGNING	L SUM	1	1
	Z0001002	GUARDRAIL AGGREGATE EROSION CONTROL	TON	2,233.0	2,233.0
	53212754	STRUCTURAL REPAIR OF CONCRETE (DEPTH EQUAL TO OR LESS THAN 5 INCHES)	SQ FT	78	78
	Z0013798	CONSTRUCTION LAYOUT	L SUM	1	1
	Z0018500	DRAINAGE STRUCTURES TO BE CLEANED	EACH	5	5
	Z0029090	DIAMOND GRINDING (BRIDGE SECTION)	SQ YD	6,299	6,299
	Z0048665	RAILROAD PROTECTIVE LIABILITY INSURANCE	L SUM	1	1
Ø	Z0076600	TRAINEES	HOUR	3000	3000
	Z0062456	TEMPORARY PAVEMENT	SQ YD	618	618
Ø	Z0076604	TRAINEES TRAINING PROGRAM GRADUATE	HOUR	3000	3000

Ø 0042

REV - MS

MODEL: Default
FILE NAME: pw://hq-pwint01.a-e.transyscorp.com:transyscorp-pw1/Documents/Projects_2020/CH401/401200165/Road/303.04 - Standard Sheets/01 - General/D876N65-sht-SOQ.dgn

TRANSYSTEMS

USER NAME = mbmcwhorter	DESIGNED - MBM	REVISED -	
	DRAWN - MBM	REVISED -	
	CHECKED - KKY	REVISED -	
PLOT DATE = 10/15/2025	DATE - 10/15/2025	REVISED -	

STATE OF ILLINOIS
DEPARTMENT OF TRANSPORTATION

ILLINOIS 3 OVER PORT DISTRICT RAILYARD
SUMMARY OF QUANTITIES

SCALE: | SHEET 5 OF 5 SHEETS | STA. | TO STA.

F.A.P RTE.	SECTION	COUNTY	TOTAL SHEETS	SHEET NO.
0002	(103,104)BR-1	MADISON	178	8

CONTRACT NO. 76N65

ILLINOIS | FED. AID PROJECT

EARTHWORK SUMMARY OF QUANTITIES

PROJECT AREA	EARTH EXCAVATION	UNUSABLE FURNISHED EXCAVATION	STRUCTURE EXCAVATION (SEE STRUCTURAL SHEETS)	EARTH EXCAVATION (ADJUSTED 15% FOR SHRINKAGE) (SEE NOTE 2)	NON-SPECIAL WASTE DISPOSAL	FURNISHED EXCAVATION	REMOVAL AND DISPOSAL OF UNSUITABLE MATERIAL
	CU YD		CU YD	CU YD	CU YD	CU YD	CU YD (TOPSOIL)
ILLINOIS 3 (CEDAR STREET)	1,412	182	308	1,307		683	182
UNDERCUT							
NON-REUSABLE NON-SPECIAL WASTE DISPOSAL (SEE NOTE 1)					1,307		
TOTALS	1,412	182	308	1,307	1,307	683	182
ROUNDED TOTALS	1,415	185	310	1,310	1,310	685	185

EARTHWORK END AREA SCHEDULE

	END AREA	
	EARTH EXCAVATION	EMBANKMENT
STATION	(SQ FT)	(SQ FT)
310+00.00	0.0	0.0
310+50.00	0.0	2.0
311+00.00	2.2	2.4
311+50.00	1.8	3.5
312+00.00	1.2	3.8
312+50.00	1.8	3.1
313+00.00	2.1	2.6
313+50.00	2.4	2.2
314+00.00	109.2	0.8
314+50.00	102.0	1.4
315+00.00	102.1	1.4
315+50.00	0.0	0.0
322+00.00	114.7	306.0
322+50.00	97.1	3.3
323+00.00	89.5	4.0
323+50.00	87.7	5.1
324+00.00	9.2	2.2
324+50.00	6.5	4.6
325+00.00	7.5	4.3
325+50.00	9.3	2.2
326+00.00	6.9	3.5
326+50.00	4.1	5.1
327+00.00	1.8	3.1
327+50.00	2.1	2.8
328+00.00	0.0	0.0

GUARDRAIL SCHEDULE

LOCATION	STEEL PLATE BEAM GUARDRAIL, TYPE A, 6 FOOT POSTS	TRAFFIC BARRIER TERMINAL, TYPE 2	TRAFFIC BARRIER TERMINAL, TYPE 5	TRAFFIC BARRIER TERMINAL, TYPE 6	TRAFFIC BARRIER TERMINAL, TYPE 1 (SPECIAL) TANGENT
	FOOT	EACH	EACH	EACH	EACH
STATION 300+00 TO STATION 313+00	587.50	1.00	-	-	1.00
STATION 313+00 TO STATION 324+00	975.00	-	2.00	2.00	-
STATION 324+00 TO STATION 335+00	675.00	1.00	-	-	1.00
TOTAL	2,237.50	2.00	2.00	2.00	2

NOTES

1. PROJECT REPORT PSI IDENTIFIED 2,000 CUBIC YARDS OF NON-SPECIAL WASTE DISPOSAL FOR THIS PROJECT. THIS VALUE IS LARGER THAN EARTH EXCAVATION AND STRUCTURE EXCAVATION. IT IS ASSUMED THAT NO EARTH EXCAVATED FROM THIS PROJECT SITE WOULD BE RE-USABLE. ALL EMBANKMENT MATERIAL SHALL BE FURNISHED.

2. QUANTITY CALCULATED BY THE FOLLOWING: ((EARTH EX+STRUCTURAL EXCAVATION)-(UNUSABLE FURNISHED EXCAVATION))*SHRINKAGE FACTOR

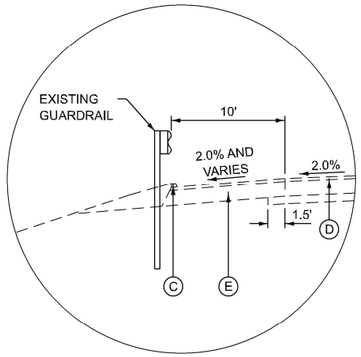

ILLINOIS 3
EXISTING TYPICAL SECTION
LEFT SHOULDER CURB AND GUARDRAIL
STA 310+13.12 TO STA 313+75.96
STA 323+66.00 TO STA 327+92.73

EXISTING LEGEND

- (A) EXISTING PCC PAVEMENT, 8"
- (B) EXISTING SUBBASE, 4"
- (C) EXISTING HMA FORMED CURB, 2"
- (D) EXISTING HMA OVERLAY, 1.5"
- (E) EXISTING STABILIZED SHOULDER BAM
- (F) EXISTING CURB & GUTTER
- (G) EXISTING MEDIAN SURFACE
- (H) EXISTING PCC BASE COURSE, 10"
- (I) EXISTING PRECAST CONCRETE MEDIAN BARRIER

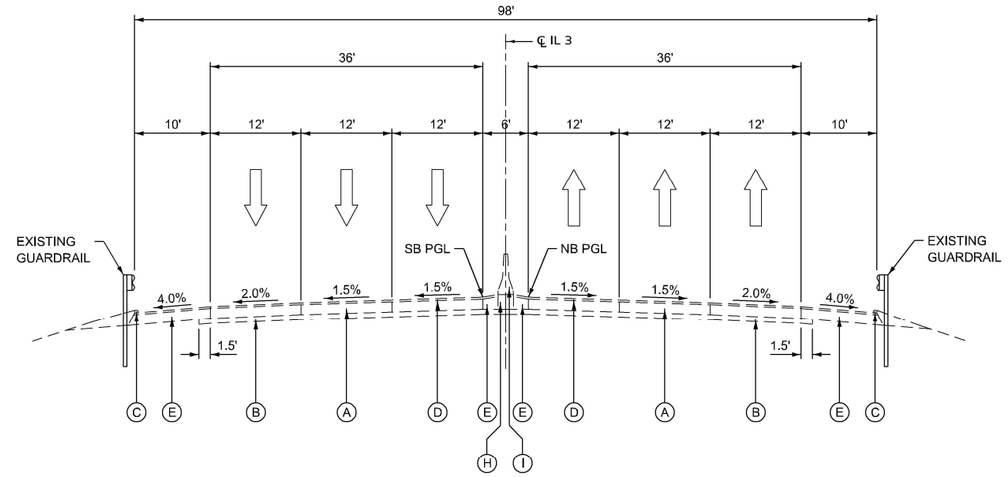

ILLINOIS 3
EXISTING TYPICAL SECTION
ROADWAY SECTION
STA 313+75.96 TO STA 314+24.71 CONC BARRIER TRANSITION
STA 314+24.71 TO STA 315+46.16
STA 315+46.16 TO STA 321+96.33 BRIDGE
STA 321+96.33 TO STA 323+66.00

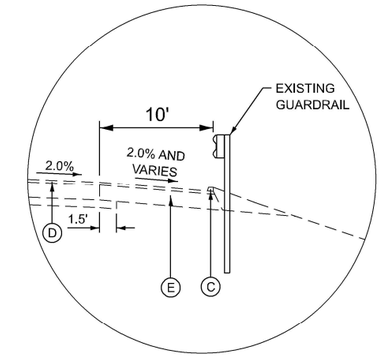

ILLINOIS 3
EXISTING TYPICAL SECTION
RIGHT SHOULDER CURB AND GUARDRAIL
STA 310+13.12 TO STA 313+75.96
STA 323+66.00 TO STA 326+77.73

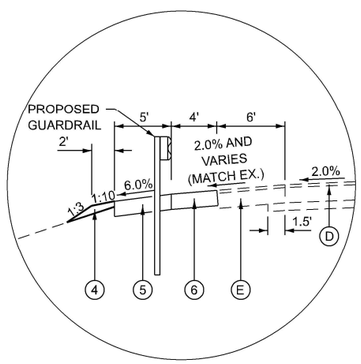

ILLINOIS 3
PROPOSED TYPICAL SECTION
LEFT SHOULDER CURB AND GUARDRAIL
STA 310+13.12 TO STA 313+75.96
STA 323+66.00 TO STA 327+92.73

PROPOSED LEGEND

- (1) PCC PAVEMENT, 9.25"
- (2) AGGREGATE SUBGRADE IMPROVEMENT 12"
- (3) SUBBASE GRANULAR MATERIAL, TYPE A 4"
- (4) FURNISHED EXCAVATION (SEE LANDSCAPING PLANS FOR DETAILS AND PAY ITEMS)
- (5) AGGREGATE SHOULDERS, TYPE B 8"
- (6) HOT-MIX ASPHALT SHOULDER, 8"
- (7) PCC SHOULDERS, 9.25"
- (8) CONCRETE MEDIAN, TYPE SM-6.06
- (9) CONCRETE BARRIER, DOUBLE FACE, 44"
- (10) CONCRETE BARRIER BASE

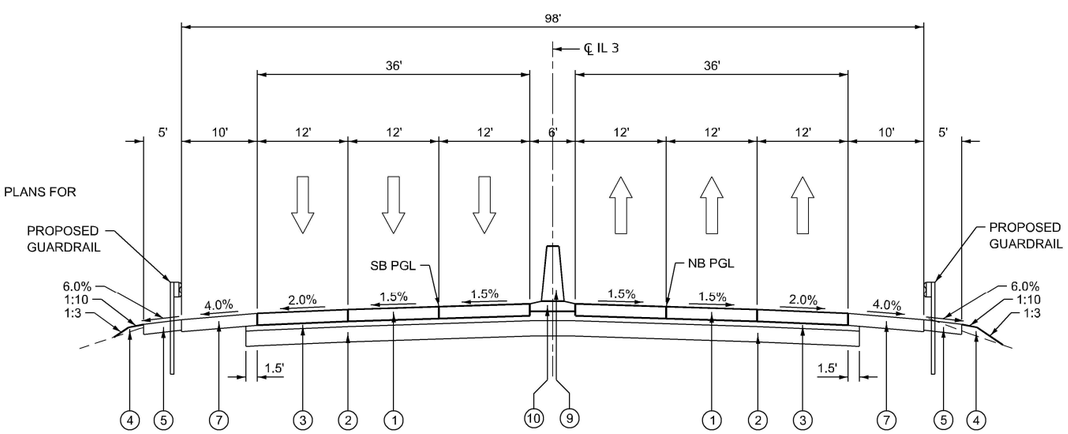

ILLINOIS 3
PROPOSED TYPICAL SECTION
ROADWAY SECTION
STA 313+75.96 TO STA 314+24.71 CONC BARRIER TRANSITION
STA 314+24.71 TO STA 315+46.16
STA 315+46.16 TO STA 321+96.33 BRIDGE OMISSION
STA 321+96.33 TO STA 323+66.00

*AT NORTHBOUND AND SOUTHBOUND BRIDGE APPROACHES USE CONCRETE CURB, TYPE B TO TRANSITION TO BRIDGE PARAPET (STA 315+47.72 TO STA 315+63.34, RT) AND (STA 321+55.89 TO STA 321+71.52, LT)

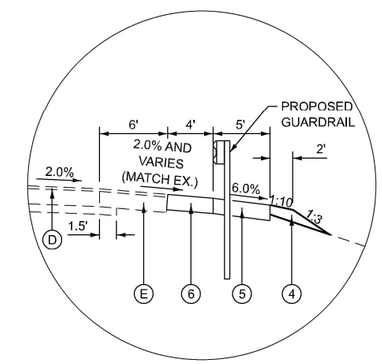

ILLINOIS 3
PROPOSED TYPICAL SECTION
RIGHT SHOULDER CURB AND GUARDRAIL
STA 310+13.12 TO STA 313+75.96
STA 323+66.00 TO STA 326+77.73

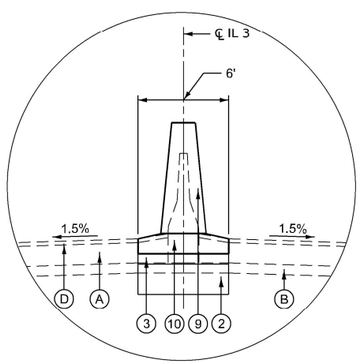

ILLINOIS 3
PROPOSED TYPICAL SECTION
MEDIAN BARRIER EXTENSION
STA 323+66.00 TO STA 331+32.12

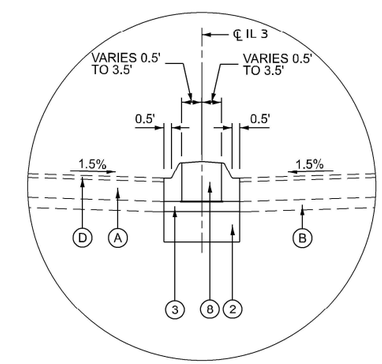

ILLINOIS 3
PROPOSED TYPICAL SECTION
CURBED MEDIAN
STA 308+35.20 TO STA 313+75.96

MODEL: TYPICAL SECTIONS
FILE NAME: pw://hq-pwim01.a-e.transyscorp.com:transyscorp-pw1/Documents/Projects_2020/CH401401200165/Road/303.04 - Standard Sheets/02 - Typical Sections/01165-CON-TYPICALS.dgn

Kaskaskia Engineering Group, LLC

USER NAME = mbmcwhorter	DESIGNED - RJO	REVISED -	
	DRAWN - RJO	REVISED -	
	CHECKED - EJL	REVISED -	
PLOT DATE = 10/15/2025	DATE - 10/15/2025	REVISED -	

STATE OF ILLINOIS
DEPARTMENT OF TRANSPORTATION

ILLINOIS 3 OVER PORT DISTRICT RAILYARD
TYPICAL SECTIONS

SCALE: NTS | SHEET 1 OF 1 SHEETS | STA. | TO STA.

F.A.P RTE.	SECTION	COUNTY	TOTAL SHEETS	SHEET NO.
0002	(103,104)BR-1	MADISON	178	10
		CONTRACT NO. 76N65		
	ILLINOIS	FED. AID PROJECT		

0 200 400
SCALE IN FEET

1. HORIZONTAL NOTE
THE HORIZONTAL COORDINATES FOR THIS PROJECT FAP 2 (IL 3) SECTION (103, 104) BR-1 MADISON COUNTY P-98-001-25/D-98-002-25/R-98-001-25/C-98-002-25/76N65 IL 3 ON RR YARD AT ARMY DEPOT IN GRANITE CITY - SN 060-0202 WERE PROVIDED TO EFK MOEN BY THE ILLINOIS DEPARTMENT OF TRANSPORTATION. COORDINATES ARE LOW DISTORTION PROJECTION - MADISON COUNTY

2. VERTICAL NOTE
VERTICAL CONTROL WAS PROVIDED BY THE ILLINOIS DEPARTMENT OF TRANSPORTATION TO EFK MOEN, INC. NAVD 88.

PROJECT BENCHMARKS

BM "734" (ELEVATION = 497.86)
FOUND CUT "SQUARE" ON NORTHEAST WINGWALL ON SN 061-0003 ON US 51 OVER LOUSE RUN. (REF. JOB NUMBER D98-016-06).

BM "3-112" (ELEVATION = 413.428)
CUT SQUARE ON WEST SIDE OF TRAFFIC SIGNAL MAST ARM FOUNDATION IN THE SOUTHEAST QUAD OF RT 3 & NIEDRINGHAUS AVE. (REF. JOB NUMBER D98-050-17)

PR CURVE 1
PI STA = 334+84.66
Δ = 24°06'54" (RT)
D = 01°40'00"
R = 3,437.75'
T = 734.32'
L = 1446.90
E = 77.55'
e = ____
TR = ____
SE RUN = ____
PC STA = 327+50.34
PT STA = 341+97.24

COORDINATE TABLE

STATION	OFFSET	NORTHING	EASTING
ILLINOIS 3			
POT 300+00.00	0.00	31841.1750	36120.9990
POT 313+75.96	0.00	30465.2168	36123.2075
POT 315+43.16	0.00	30298.0181	36123.3118
POT 321+99.57	0.00	29641.6134	36124.6469
POT 323+66.00	0.00	29475.1783	36124.7966
PC 327+50.34	0.00	29090.8378	36125.4135
PI 334+84.66	77.5' LT	28356.5156	36136.5921
PT 341+97.24	0.00	27685.7981	35827.6463
POT 357+00.00	0.00	26313.2087	35215.8687

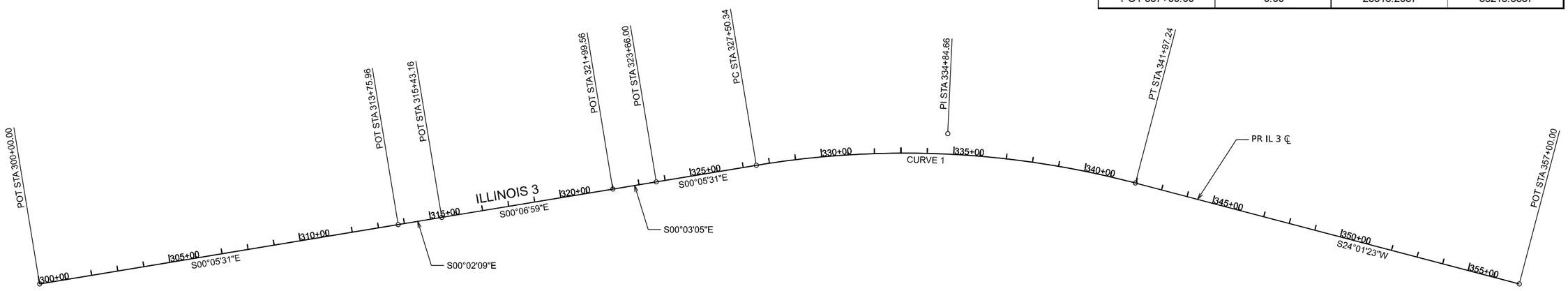

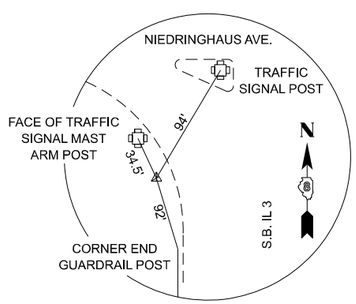

CONTROL POINT NO. 1
IRON PIN W/PLASTIC CAP
N: 30915.4735
E: 36061.8308
EL: 414.56
STA. 1649+09.70 60.65' RT.

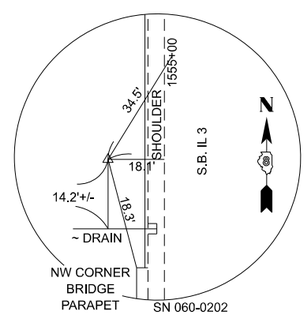

CONTROL POINT NO. 2
IRON PIN W/PLASTIC CAP
N: 30294.9559
E: 36066.2141
EL: 435.41
STA 1655+30.23 57.27' RT.

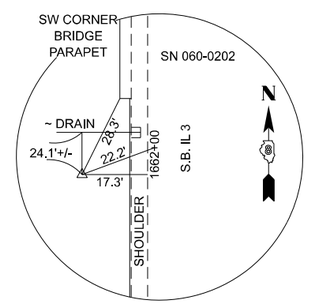

CONTROL POINT NO. 3
IRON PIN W/PLASTIC CAP
N: 29611.3813
E: 36068.3629
EL: 437.55
STA 1662+13.81 56.22' RT

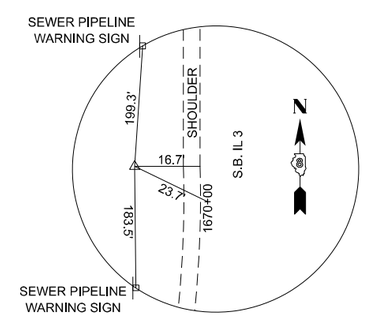

CONTROL POINT NO. 4
IRON PIN W/PLASTIC CAP
N: 28847.5265
E: 36062.2588
EL: 415.72
STA 1669+81.80 54.79' RT

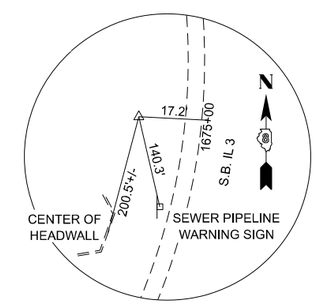

CONTROL POINT NO. 5
IRON PIN W/PLASTIC CAP
N: 28347.1650
E: 35988.2137
EL: 414.68
STA 1674+96.35 55.67' RT

MODEL: ATB1
FILE NAME: pw://hq-pwint01.a-e.transyscorp.com:transyscorp-pw1/Documents/Projects_2020/CH401/401200165/Road/303.04 - Standard Sheets/04 - Alignment & Ties/D876N65-sht-ATB.dgn

EFK•Moen
Civil Engineering Design

USER NAME = mbmcwhorter	DESIGNED - JRD	REVISED -	
	DRAWN - ZJW	REVISED -	
	CHECKED -	REVISED -	
PLOT DATE = 10/15/2025	DATE - 10/15/2025	REVISED -	

STATE OF ILLINOIS
DEPARTMENT OF TRANSPORTATION

ILLINOIS 3 OVER PORT DISTRICT RAILYARD
ALIGNMENT, TIES, & BENCHMARKS

SCALE: 1"=200' | SHEET 1 OF 1 SHEETS | STA. 300+00 TO STA. 357+00.00

F.A.P RTE.	SECTION	COUNTY	TOTAL SHEETS	SHEET NO.
0002	(103,104)BR-1	MADISON	178	11
		CONTRACT NO. 76N65		
	ILLINOIS	FED. AID PROJECT		

0 50 100
SCALE IN FEET

LEGEND

- CONCRETE MEDIAN SURFACE REMOVAL
- COMBINATION CURB AND GUTTER REMOVAL
- SHOULDER REMOVAL
- PAVEMENT REMOVAL

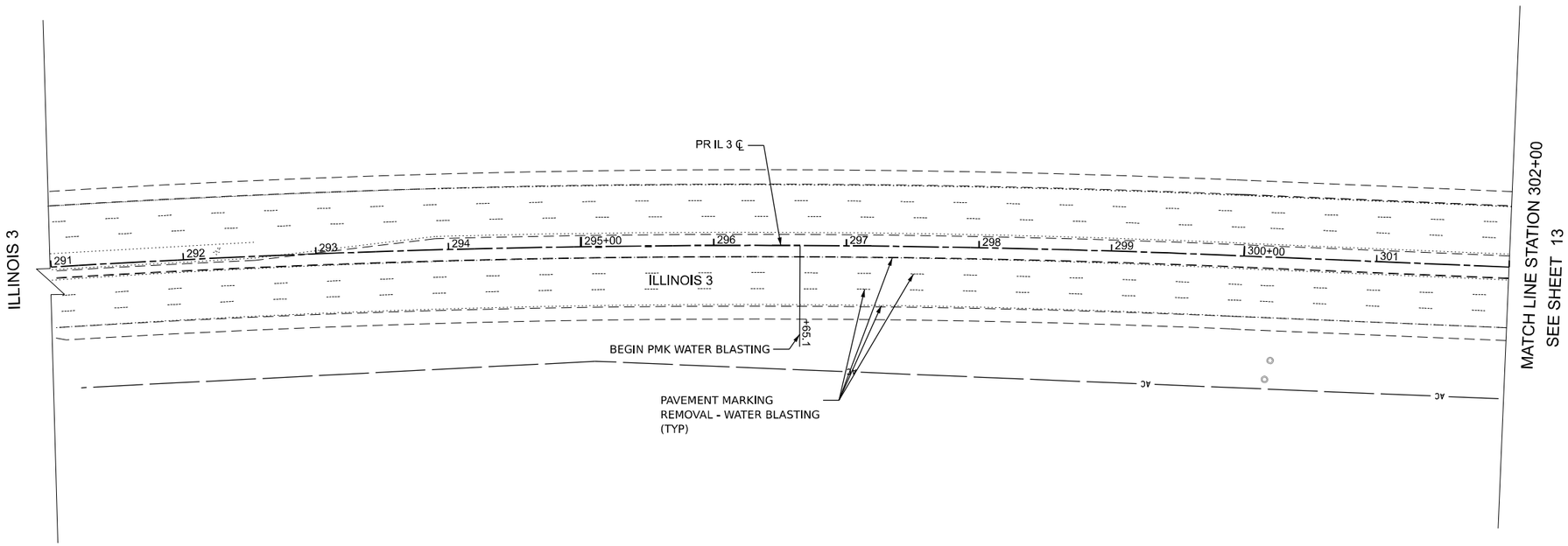

NOTES

1. SEE EXISTING DRAINAGE REMOVAL PLANS FOR DRAINAGE REMOVALS.
2. SEE STRUCTURAL PLANS FOR BRIDGE REMOVALS

MODEL: IL3_MOT - Plan 2
FILE NAME: pw://hq-pwint01.a-ts.transyscorp.com:transyscorp-pw1/Documents/Projects_2020/CH401/401200165/Road/303.04 - Standard Sheets/05 - Roadway Removals/D876N65-sht-removal2.dgn

TRANSYSTEMS

USER NAME = mbmcwhorter	DESIGNED - MBM	REVISED -	
	DRAWN - MBM	REVISED -	
	CHECKED - KKY	REVISED -	
PLOT DATE = 10/15/2025	DATE - 10/15/2025	REVISED -	

STATE OF ILLINOIS
DEPARTMENT OF TRANSPORTATION

ILLINOIS 3 OVER PORT DISTRICT RAILYARD
REMOVAL PLAN

SCALE: 50 SCALE | SHEET 1 OF 10 SHEETS | STA. 291+00 TO STA. 302+00

F.A.P RTE.	SECTION	COUNTY	TOTAL SHEETS	SHEET NO.
0002	(103,104)BR-1	MADISON	178	12

CONTRACT NO. 76N65

ILLINOIS | FED. AID PROJECT

LEGEND

- CONCRETE MEDIAN SURFACE REMOVAL
- COMBINATION CURB AND GUTTER REMOVAL
- SHOULDER REMOVAL
- PAVEMENT REMOVAL

0 50 100
SCALE IN FEET

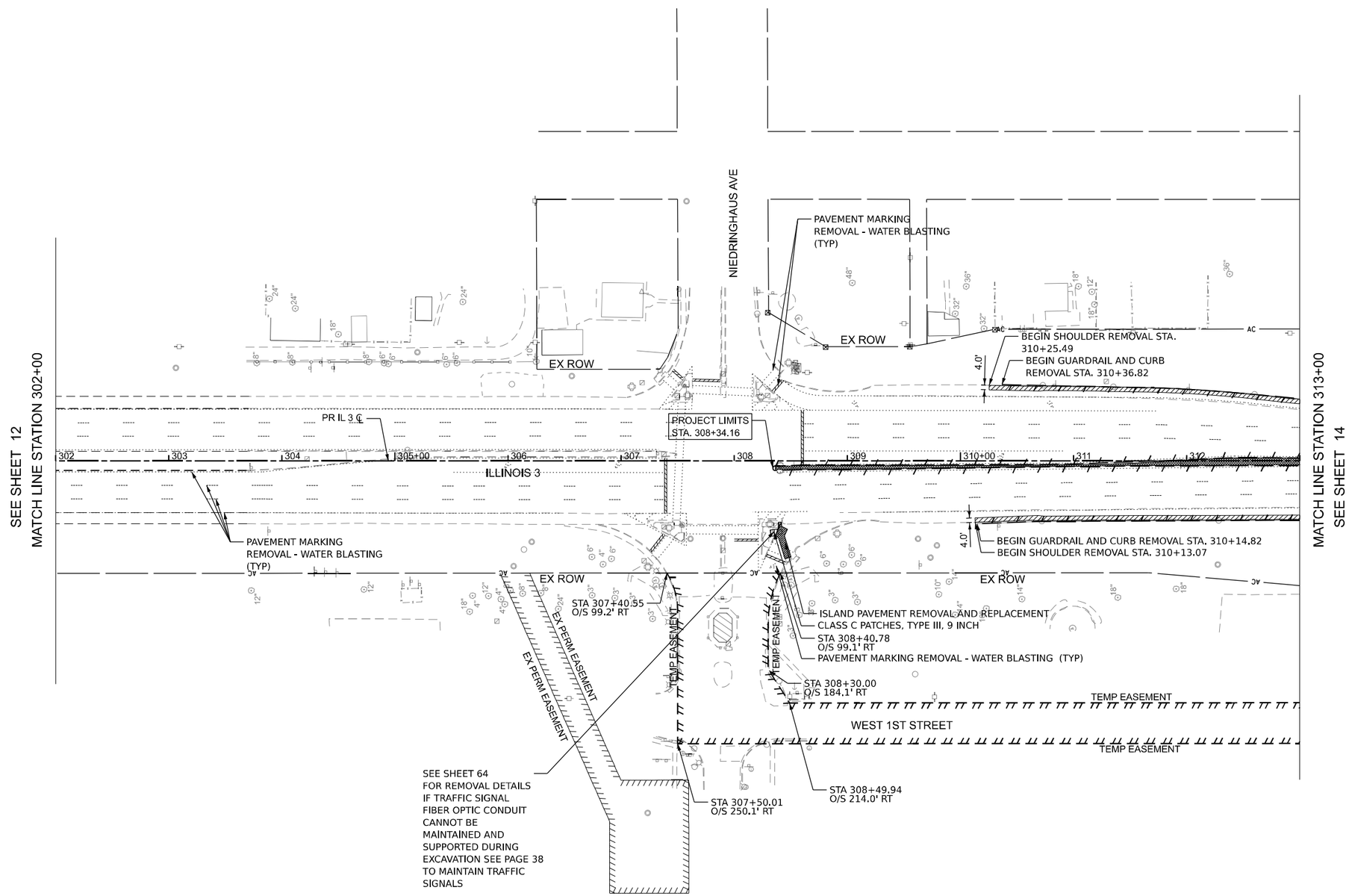

NOTES

1. SEE EXISTING DRAINAGE REMOVAL PLANS FOR DRAINAGE REMOVALS.
2. SEE STRUCTURAL PLANS FOR BRIDGE REMOVALS

MODEL: 50 SCALE PLAN - Plan 1-1
FILE NAME: pw://hq-pwinfo1.ae.transyscorp.com:transyscorp-pw1/Documents/Projects_2020/CH401/40120016S/Road/303.04 - Standard Sheets/05 - Roadway Removals/D876N65-sht-removal1.dgn

TRANSYSTEMS

USER NAME = mbmcwhorter	DESIGNED - MBM	REVISED -	
	DRAWN - MBM	REVISED -	
	CHECKED - KKY	REVISED -	
PLOT DATE = 10/15/2025	DATE - 10/15/2025	REVISED -	

STATE OF ILLINOIS
DEPARTMENT OF TRANSPORTATION

ILLINOIS 3 OVER PORT DISTRICT RAILYARD
REMOVAL PLAN

SCALE: 50 SCALE | SHEET 2 OF 10 SHEETS | STA. 302+00 TO STA. 313+00

F.A.P RTE.	SECTION	COUNTY	TOTAL SHEETS	SHEET NO.
0002	(103,104)BR-1	MADISON	178	13

CONTRACT NO. 76N65

ILLINOIS | FED. AID PROJECT

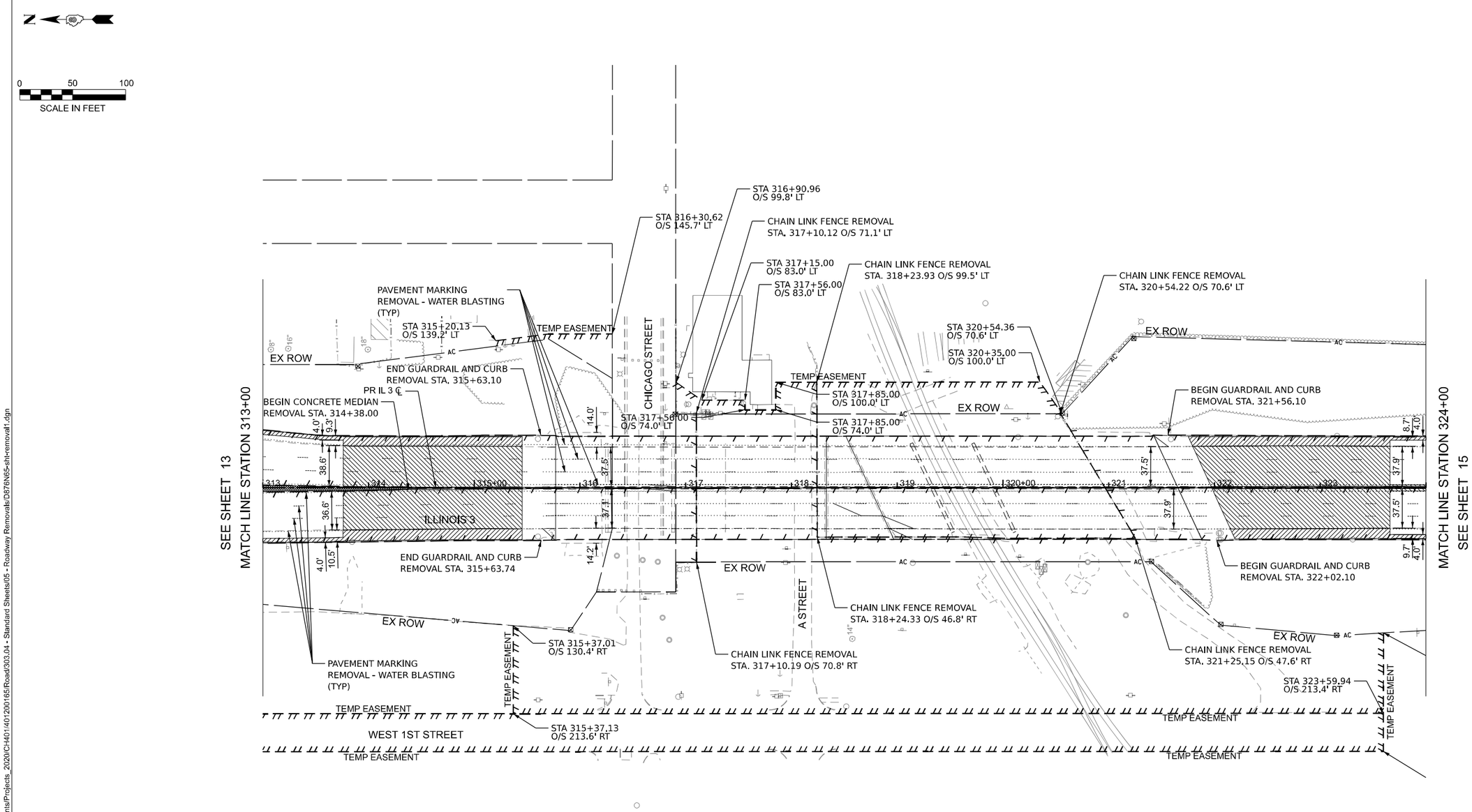

LEGEND

- CONCRETE MEDIAN SURFACE REMOVAL
- COMBINATION CURB AND GUTTER REMOVAL
- SHOULDER REMOVAL
- PAVEMENT REMOVAL

NOTES

1. SEE EXISTING DRAINAGE REMOVAL PLANS FOR DRAINAGE REMOVALS.
2. SEE STRUCTURAL PLANS FOR BRIDGE REMOVALS

MODEL: 50 SCALE PLAN - Plan 2-1
FILE NAME: pw://hq-pwint01.ae.transyscorp.com:transyscorp-pw1/Documents/Projects_2020/CH401/401200165/Road/303.04 - Standard Sheets/05 - Roadway Removals/D876N65-sht-removal1.dgn

TRANSYSTEMS

USER NAME = mbmcwhorter	DESIGNED - MBM	REVISED -	
	DRAWN - MBM	REVISED -	
	CHECKED - KKY	REVISED -	
PLOT DATE = 10/15/2025	DATE - 10/15/2025	REVISED -	

STATE OF ILLINOIS
DEPARTMENT OF TRANSPORTATION

ILLINOIS 3 OVER PORT DISTRICT RAILYARD
REMOVAL PLAN

SCALE: 50 SCALE | SHEET 3 OF 10 SHEETS | STA. 313+00 TO STA. 324+00

F.A.P RTE.	SECTION	COUNTY	TOTAL SHEETS	SHEET NO.
0002	(103,104)BR-1	MADISON	178	14

CONTRACT NO. 76N65

ILLINOIS | FED. AID PROJECT

0 50 100
SCALE IN FEET

LEGEND

- CONCRETE MEDIAN SURFACE REMOVAL
- COMBINATION CURB AND GUTTER REMOVAL
- SHOULDER REMOVAL
- PAVEMENT REMOVAL

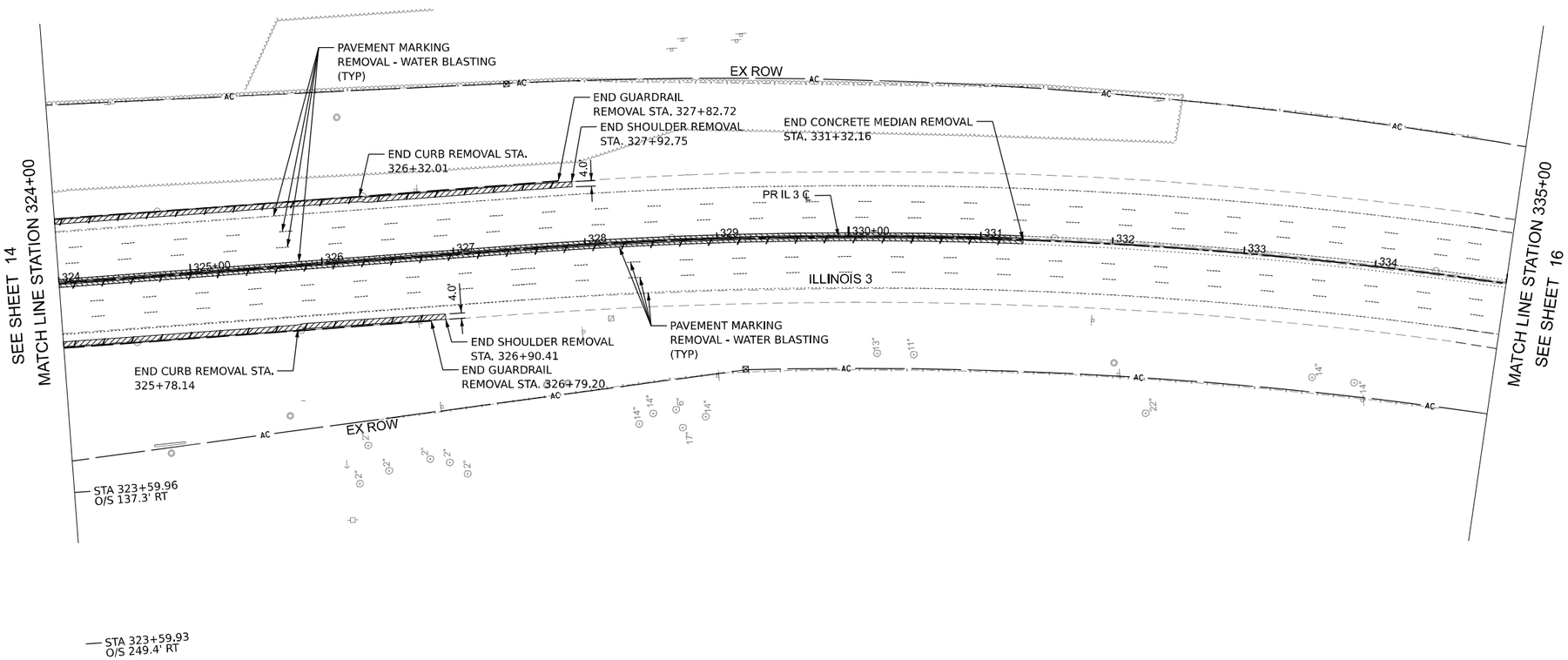

NOTES

1. SEE EXISTING DRAINAGE REMOVAL PLANS FOR DRAINAGE REMOVALS.
2. SEE STRUCTURAL PLANS FOR BRIDGE REMOVALS

+85.23
76' RT.

MODEL: 50 SCALE PLAN - Plan 3-1
FILE NAME: pw://hq-pwin01.a-e.transyscorp.com:transyscorp-pw1/Documents/Projects_2020/CH401/401200165/Road/303.04 - Standard Sheets/05 - Roadway Removals/D876N65-sht-removal1.dgn

TRANSYSTEMS

USER NAME = mbmcwhorter	DESIGNED - MBM	REVISED -	
	DRAWN - MBM	REVISED -	
	CHECKED - KKY	REVISED -	
PLOT DATE = 10/15/2025	DATE - 10/15/2025	REVISED -	

STATE OF ILLINOIS
DEPARTMENT OF TRANSPORTATION

ILLINOIS 3 OVER PORT DISTRICT RAILYARD
REMOVAL PLAN

SCALE: 50 SCALE | SHEET 4 OF 10 SHEETS | STA. 324+00 TO STA. 335+00

F.A.P RTE.	SECTION	COUNTY	TOTAL SHEETS	SHEET NO.
0002	(103,104)BR-1	MADISON	178	15

CONTRACT NO. 76N65

ILLINOIS | FED. AID PROJECT

0 50 100
SCALE IN FEET

LEGEND

- CONCRETE MEDIAN SURFACE REMOVAL
- COMBINATION CURB AND GUTTER REMOVAL
- SHOULDER REMOVAL
- PAVEMENT REMOVAL

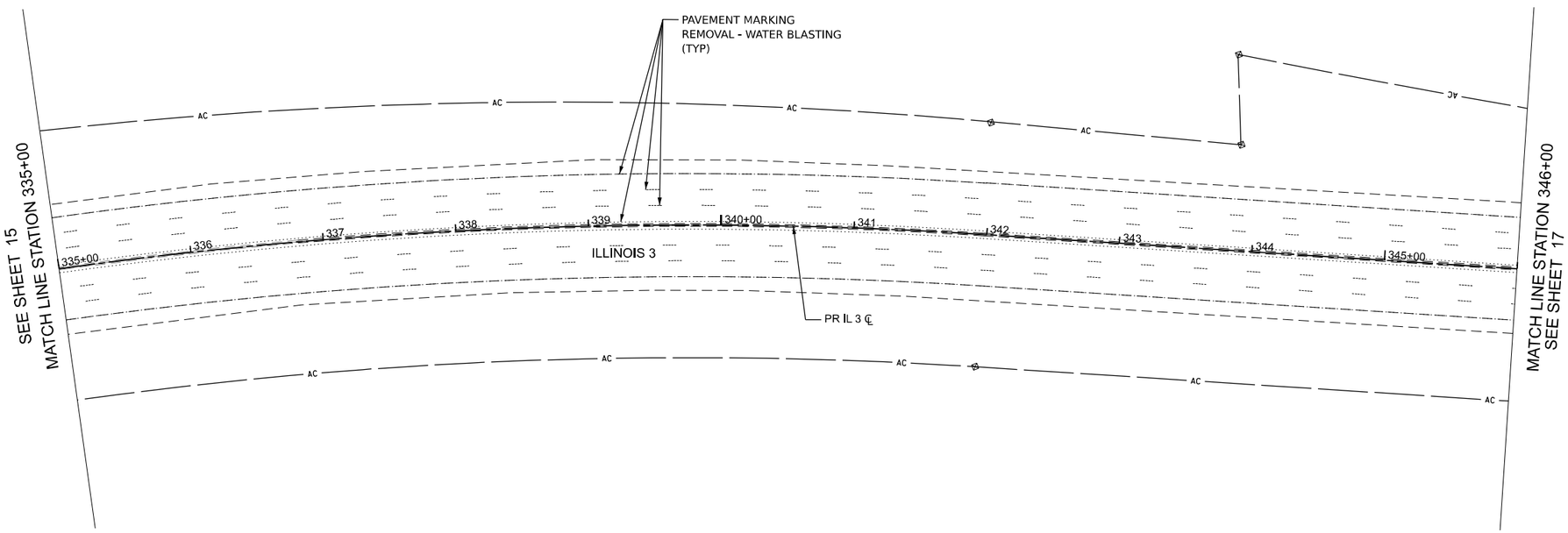

NOTES

1. SEE EXISTING DRAINAGE REMOVAL PLANS FOR DRAINAGE REMOVALS.
2. SEE STRUCTURAL PLANS FOR BRIDGE REMOVALS

MODEL: IL3_MOT - Plan 3
FILE NAME: pw://hq-pwin01.ae-b.transyscorp.com:transyscorp-pw1/Documents/Projects_2020/CH401/401200165/Road/303.04 - Standard Sheets/05 - Roadway Removals/D876N65-sht-removal2.dgn

TRANSYSTEMS

USER NAME = mbmcwhorter	DESIGNED - MBM	REVISED -	
	DRAWN - MBM	REVISED -	
	CHECKED - KKY	REVISED -	
PLOT DATE = 10/15/2025	DATE - 10/15/2025	REVISED -	

STATE OF ILLINOIS
DEPARTMENT OF TRANSPORTATION

ILLINOIS 3 OVER PORT DISTRICT RAILYARD
REMOVAL PLAN

SCALE: 50 SCALE | SHEET 5 OF 10 SHEETS | STA. 335+00 TO STA. 346+00

F.A.P RTE.	SECTION	COUNTY	TOTAL SHEETS	SHEET NO.
0002	(103,104)BR-1	MADISON	178	16
		CONTRACT NO. 76N65		
		ILLINOIS	FED. AID PROJECT	

0 50 100
SCALE IN FEET

LEGEND

- CONCRETE MEDIAN SURFACE REMOVAL
- COMBINATION CURB AND GUTTER REMOVAL
- SHOULDER REMOVAL
- PAVEMENT REMOVAL

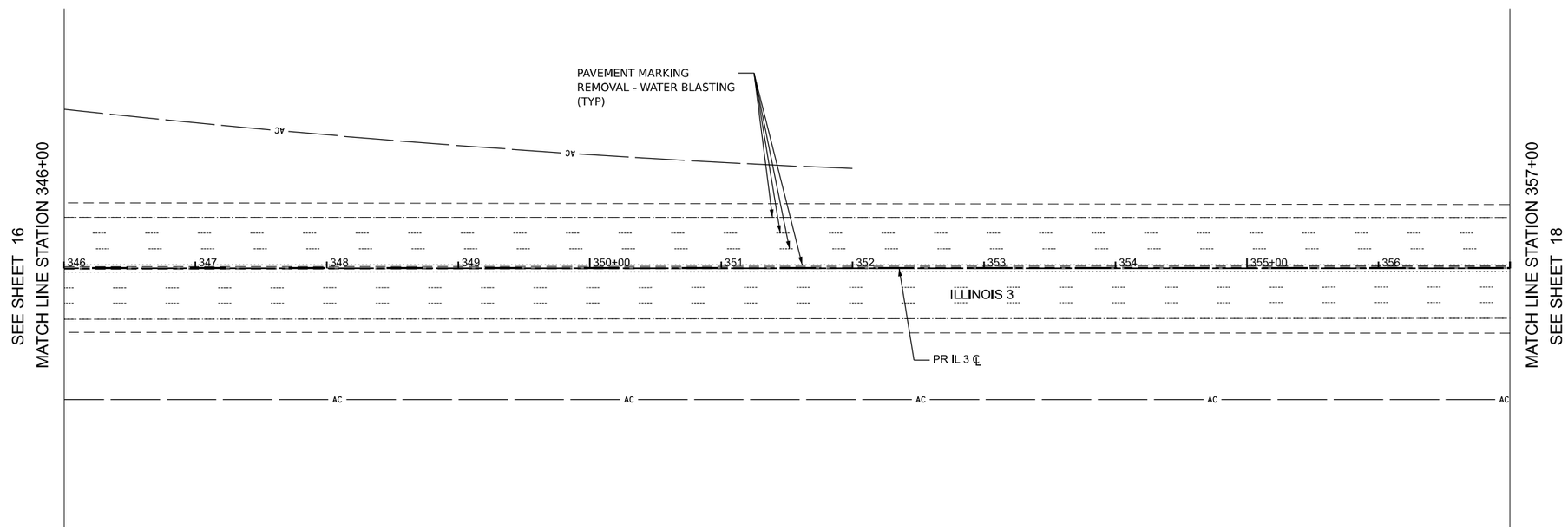

NOTES

1. SEE EXISTING DRAINAGE REMOVAL PLANS FOR DRAINAGE REMOVALS.
2. SEE STRUCTURAL PLANS FOR BRIDGE REMOVALS

MODEL: IL3_MOT - Plan 4
FILE NAME: pw://hq-pwint01.ae.transyscorp.com:transyscorp-pw1/Documents/Projects_2020/CH401/401200165/Road/303.04 - Standard Sheets/05 - Roadway Removals/D876N65-sht-removal2.dgn

TRANSYSTEMS

USER NAME = mbmcwhorter	DESIGNED - MBM	REVISED -	
	DRAWN - MBM	REVISED -	
	CHECKED - KKY	REVISED -	
PLOT DATE = 10/15/2025	DATE - 10/15/2025	REVISED -	

STATE OF ILLINOIS
DEPARTMENT OF TRANSPORTATION

ILLINOIS 3 OVER PORT DISTRICT RAILYARD
REMOVAL PLAN

SCALE: 50 SCALE | SHEET 6 OF 10 SHEETS | STA. 346+00 TO STA. 357+00

F.A.P RTE.	SECTION	COUNTY	TOTAL SHEETS	SHEET NO.
0002	(103,104)BR-1	MADISON	178	17

CONTRACT NO. 76N65

ILLINOIS | FED. AID PROJECT

0 50 100
SCALE IN FEET

LEGEND

- CONCRETE MEDIAN SURFACE REMOVAL
- COMBINATION CURB AND GUTTER REMOVAL
- SHOULDER REMOVAL
- PAVEMENT REMOVAL

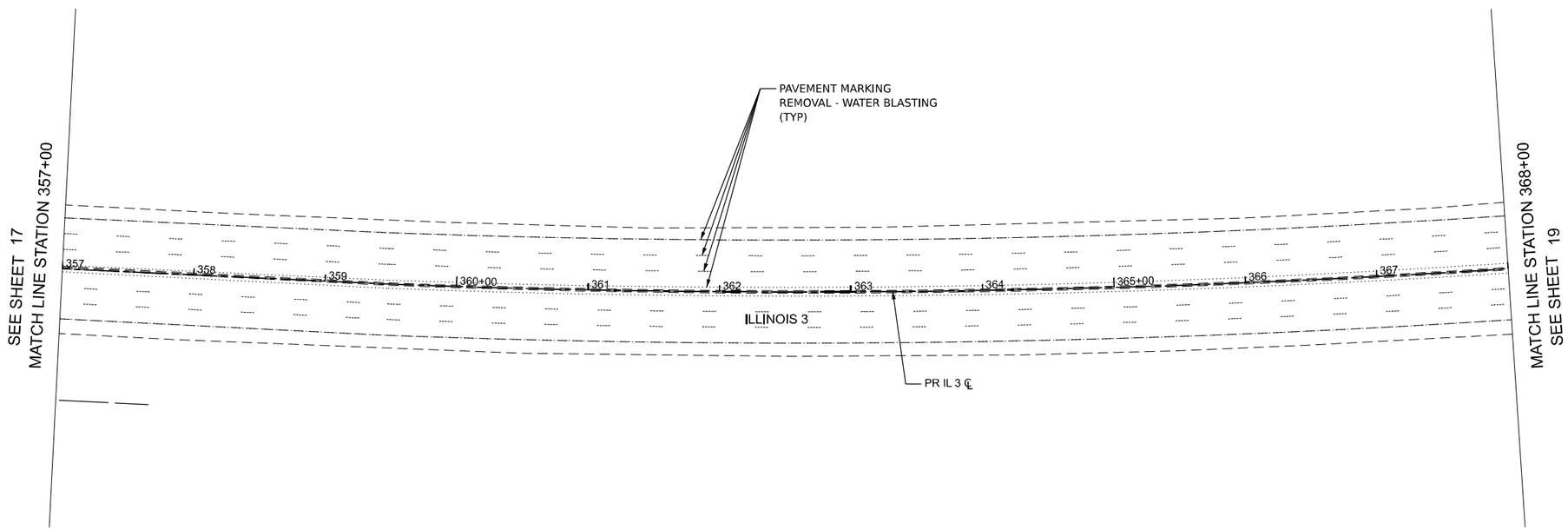

NOTES

1. SEE EXISTING DRAINAGE REMOVAL PLANS FOR DRAINAGE REMOVALS.
2. SEE STRUCTURAL PLANS FOR BRIDGE REMOVALS

MODEL: IL3_MOT - Plan 5
FILE NAME: pw://hq-pwin01.a-e.transyscorp.com:transyscorp-pw1/Documents/Projects_2020/CH401/401200165/Road/303.04 - Standard Sheets/05 - Roadway Removals/D876N65-sht-removal2.dgn

TRANSYSTEMS

USER NAME = mbmcwhorter	DESIGNED - MBM	REVISED -	
	DRAWN - MBM	REVISED -	
	CHECKED - KKY	REVISED -	
PLOT DATE = 10/15/2025	DATE - 10/15/2025	REVISED -	

STATE OF ILLINOIS
DEPARTMENT OF TRANSPORTATION

ILLINOIS 3 OVER PORT DISTRICT RAILYARD
REMOVAL PLAN

SCALE: 50 SCALE | SHEET 7 OF 10 SHEETS | STA. 357+00 TO STA. 368+00

F.A.P RTE.	SECTION	COUNTY	TOTAL SHEETS	SHEET NO.
0002	(103,104)BR-1	MADISON	178	18

CONTRACT NO. 76N65

ILLINOIS | FED. AID PROJECT

0 50 100
SCALE IN FEET

LEGEND

- CONCRETE MEDIAN SURFACE REMOVAL
- COMBINATION CURB AND GUTTER REMOVAL
- SHOULDER REMOVAL
- PAVEMENT REMOVAL

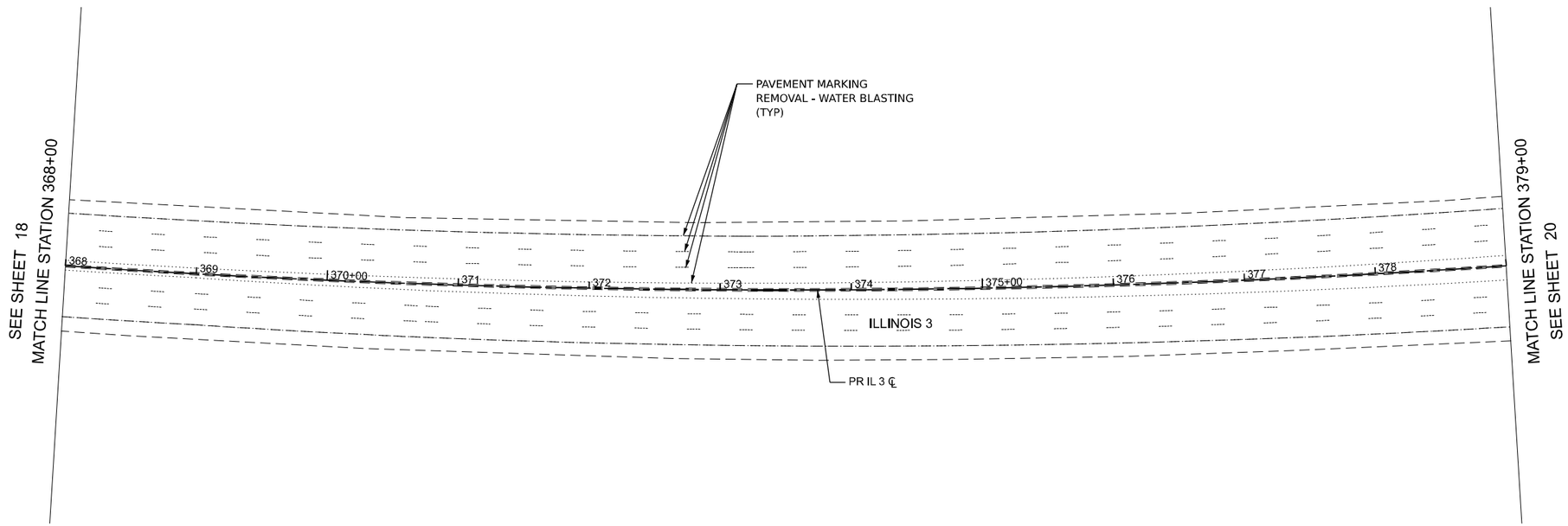

NOTES

1. SEE EXISTING DRAINAGE REMOVAL PLANS FOR DRAINAGE REMOVALS.
2. SEE STRUCTURAL PLANS FOR BRIDGE REMOVALS

MODEL: IL3_MOT - Plan 6
FILE NAME: pw://hq-pwin01.a-e3.transyscorp.com:transyscorp-pw1/Documents/Projects_2020/CH401/401200165/Road/303.04 - Standard Sheets/05 - Roadway Removals/D876N65-sht-removal2.dgn

TRANSYSTEMS

USER NAME = mbmcwhorter	DESIGNED - MBM	REVISED -	
	DRAWN - MBM	REVISED -	
	CHECKED - KKY	REVISED -	
PLOT DATE = 10/15/2025	DATE - 10/15/2025	REVISED -	

STATE OF ILLINOIS
DEPARTMENT OF TRANSPORTATION

ILLINOIS 3 OVER PORT DISTRICT RAILYARD
REMOVAL PLAN

SCALE: 50 SCALE | SHEET 8 OF 10 SHEETS | STA. 368+00 TO STA. 379+00

F.A.P RTE.	SECTION	COUNTY	TOTAL SHEETS	SHEET NO.
0002	(103,104)BR-1	MADISON	178	19
		CONTRACT NO. 76N65		
		ILLINOIS	FED. AID PROJECT	

LEGEND

- CONCRETE MEDIAN SURFACE REMOVAL
- COMBINATION CURB AND GUTTER REMOVAL
- SHOULDER REMOVAL
- PAVEMENT REMOVAL

0 50 100
SCALE IN FEET

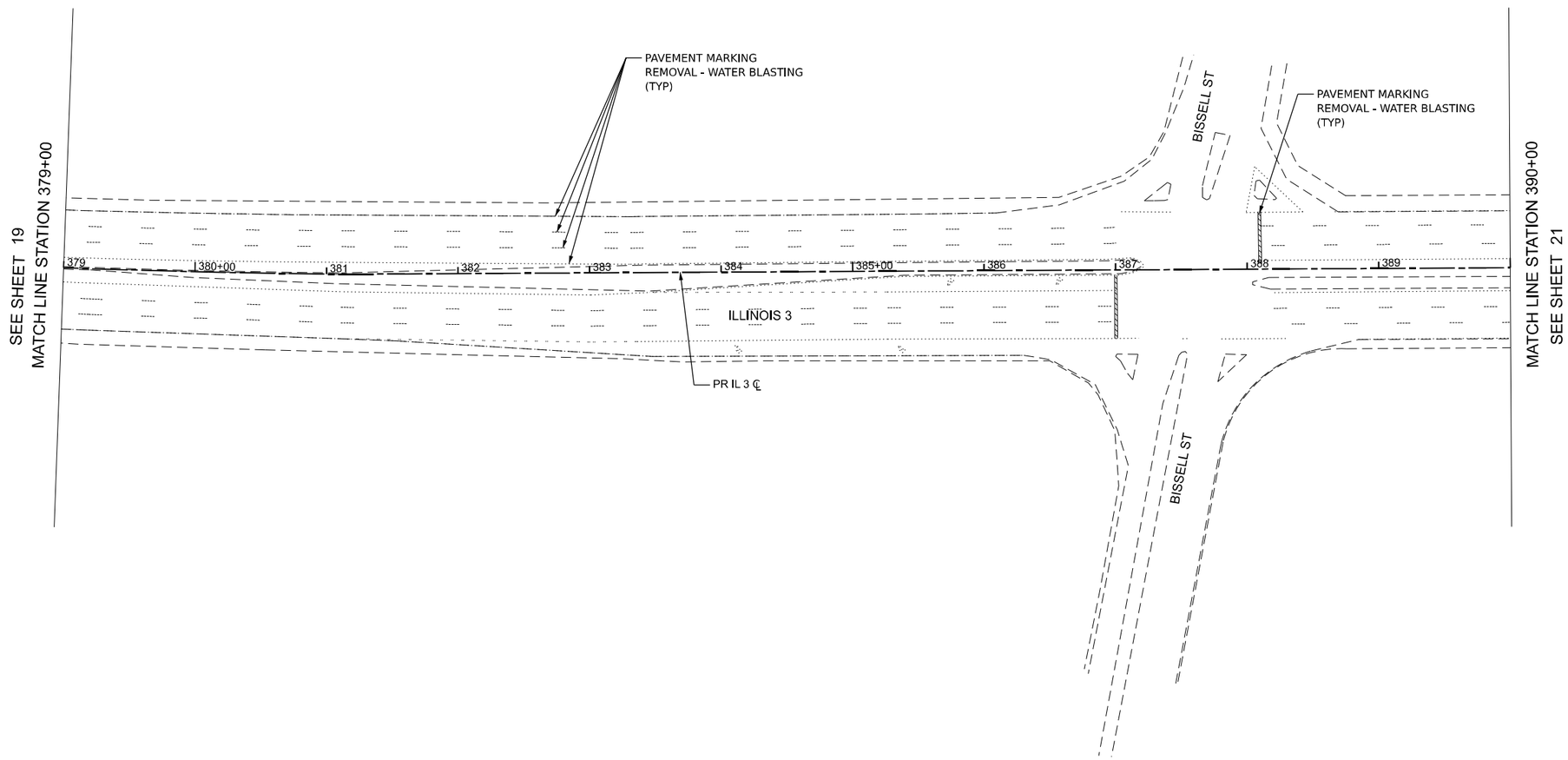

NOTES

1. SEE EXISTING DRAINAGE REMOVAL PLANS FOR DRAINAGE REMOVALS.
2. SEE STRUCTURAL PLANS FOR BRIDGE REMOVALS

MODEL: IL3_MOT - Plan 7
FILE NAME: pw://hq-pwint01.a-e.transyscorp.com:transyscorp-pw1/Documents/Projects_2020/CI-H401/401200165/Road/303.04 - Standard Sheets/05 - Roadway Removals/D876N65-sht-removal2.dgn

TRANSYSTEMS

USER NAME = mbmcwhorter	DESIGNED - MBM	REVISED -	
	DRAWN - MBM	REVISED -	
	CHECKED - KKY	REVISED -	
PLOT DATE = 10/15/2025	DATE - 10/15/2025	REVISED -	

STATE OF ILLINOIS
DEPARTMENT OF TRANSPORTATION

ILLINOIS 3 OVER PORT DISTRICT RAILYARD
REMOVAL PLAN

SCALE: 50 SCALE | SHEET 9 OF 10 SHEETS | STA. 379+00 TO STA. 390+00

F.A.P RTE.	SECTION	COUNTY	TOTAL SHEETS	SHEET NO.
0002	(103,104)BR-1	MADISON	178	20

CONTRACT NO. 76N65

ILLINOIS | FED. AID PROJECT

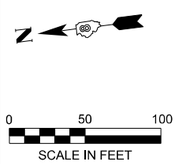

LEGEND

- CONCRETE MEDIAN SURFACE REMOVAL
- COMBINATION CURB AND GUTTER REMOVAL
- SHOULDER REMOVAL
- PAVEMENT REMOVAL

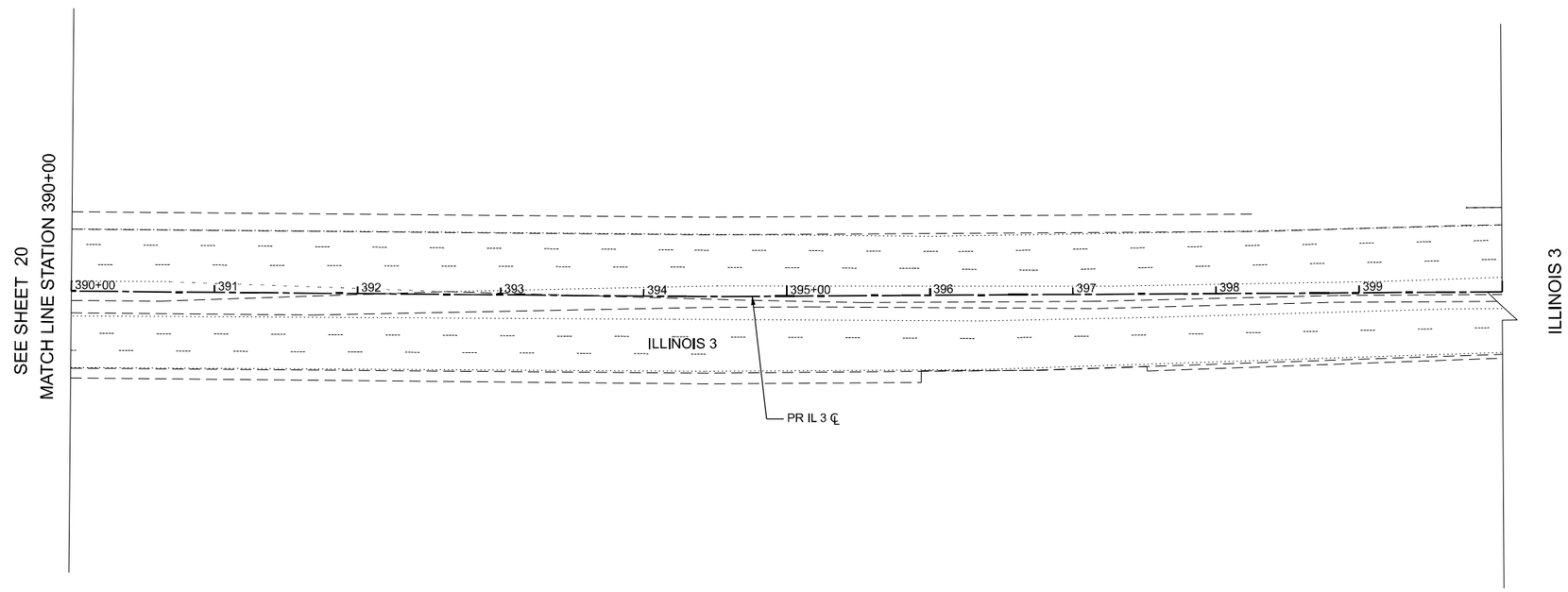

NOTES

1. SEE EXISTING DRAINAGE REMOVAL PLANS FOR DRAINAGE REMOVALS.
2. SEE STRUCTURAL PLANS FOR BRIDGE REMOVALS

MODEL: IL3_MOT - Plan 8
FILE NAME: pw://hq-pwint01.a-e.transyscorp.com:transyscorp-pw1/Documents/Projects_2020/CI-H401/401200165/Road/303.04 - Standard Sheets/05 - Roadway Removals/D876N65-sht-removal2.dgn

TRANSYSTEMS

USER NAME = mbmcwhorter	DESIGNED - MBM	REVISED -	
	DRAWN - MBM	REVISED -	
	CHECKED - KKY	REVISED -	
PLOT DATE = 10/15/2025	DATE - 10/15/2025	REVISED -	

STATE OF ILLINOIS
DEPARTMENT OF TRANSPORTATION

ILLINOIS 3 OVER PORT DISTRICT RAILYARD
REMOVAL PLAN

SCALE: 50 SCALE | SHEET 10 OF 10 SHEETS | STA. 390+00 TO STA. 400+00

F.A.P RTE.	SECTION	COUNTY	TOTAL SHEETS	SHEET NO.
0002	(103,104)BR-1	MADISON	178	21

CONTRACT NO. 76N65

ILLINOIS | FED. AID PROJECT

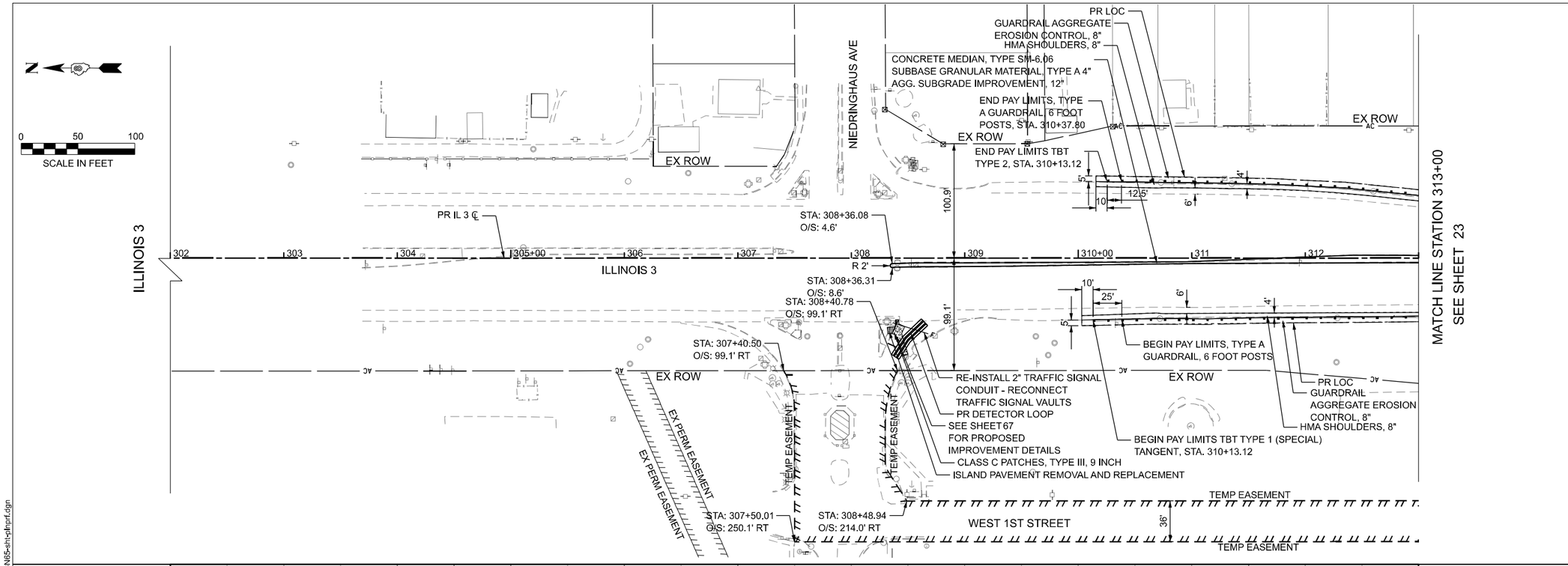

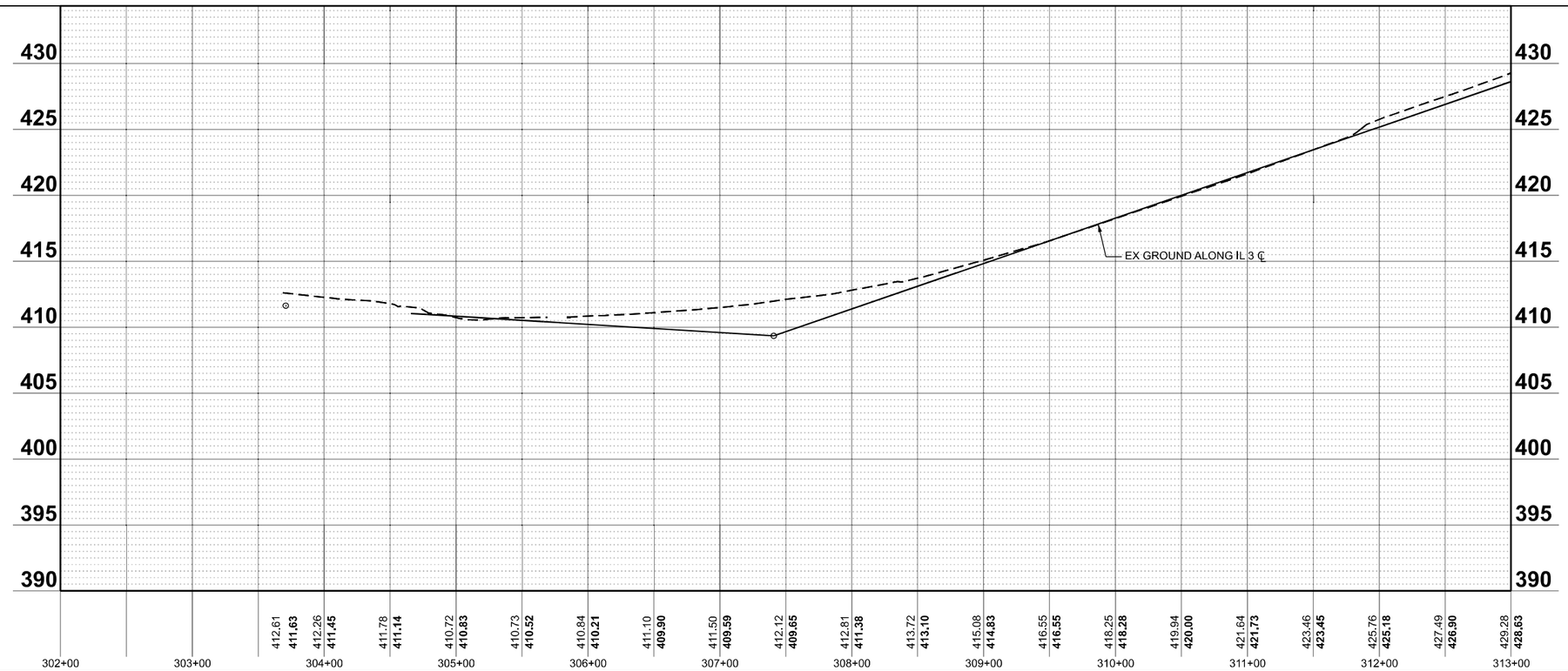

NOTES

1. SEE STRUCTURAL SHEETS FOR BRIDGE IMPROVEMENT DETAILS.

MODEL: CL_IL3 - Plan 1-1
FILE NAME: pw://hq-pwin01.a-e.transyscorp.com:transyscorp-pw1:Documents/Projects_2020/CH401401200165/Road/303.04 - Standard Sheets/06 - Road Plan & Profiles/D876N65-sht-pltnprf.dgn

TRANSYSTEMS

USER NAME = mbmcwhorter	DESIGNED - MBM	REVISED -	
	DRAWN - MBM	REVISED -	
	CHECKED - KKY	REVISED -	
PLOT DATE = 10/15/2025	DATE - 10/15/2025	REVISED -	

STATE OF ILLINOIS
DEPARTMENT OF TRANSPORTATION

ILLINOIS 3 OVER PORT DISTRICT RAILYARD
ROADWAY PLAN AND PROFILE

SCALE: 50 SCALE | SHEET 1 OF 3 SHEETS | STA. 302+00 TO STA. 313+00

F.A.P RTE.	SECTION	COUNTY	TOTAL SHEETS	SHEET NO.
0002	(103,104)BR-1	MADISON	178	22
		CONTRACT NO. 76N65		
	ILLINOIS	FED. AID PROJECT		

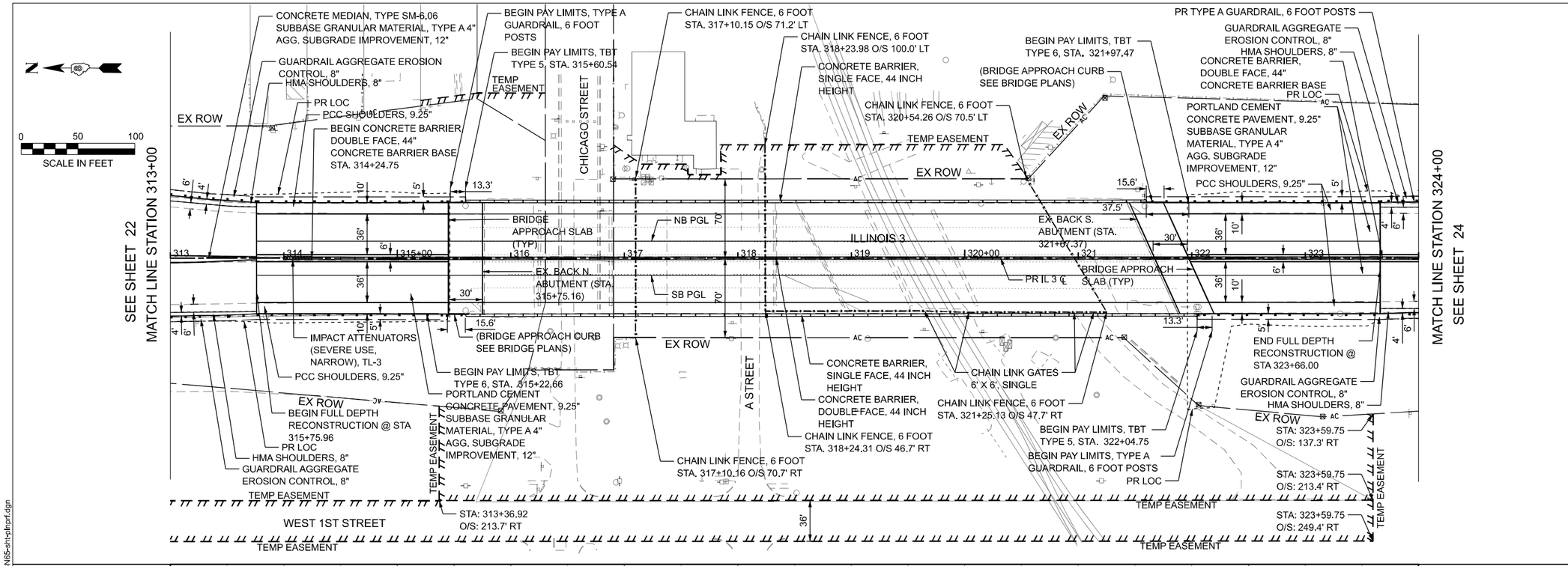

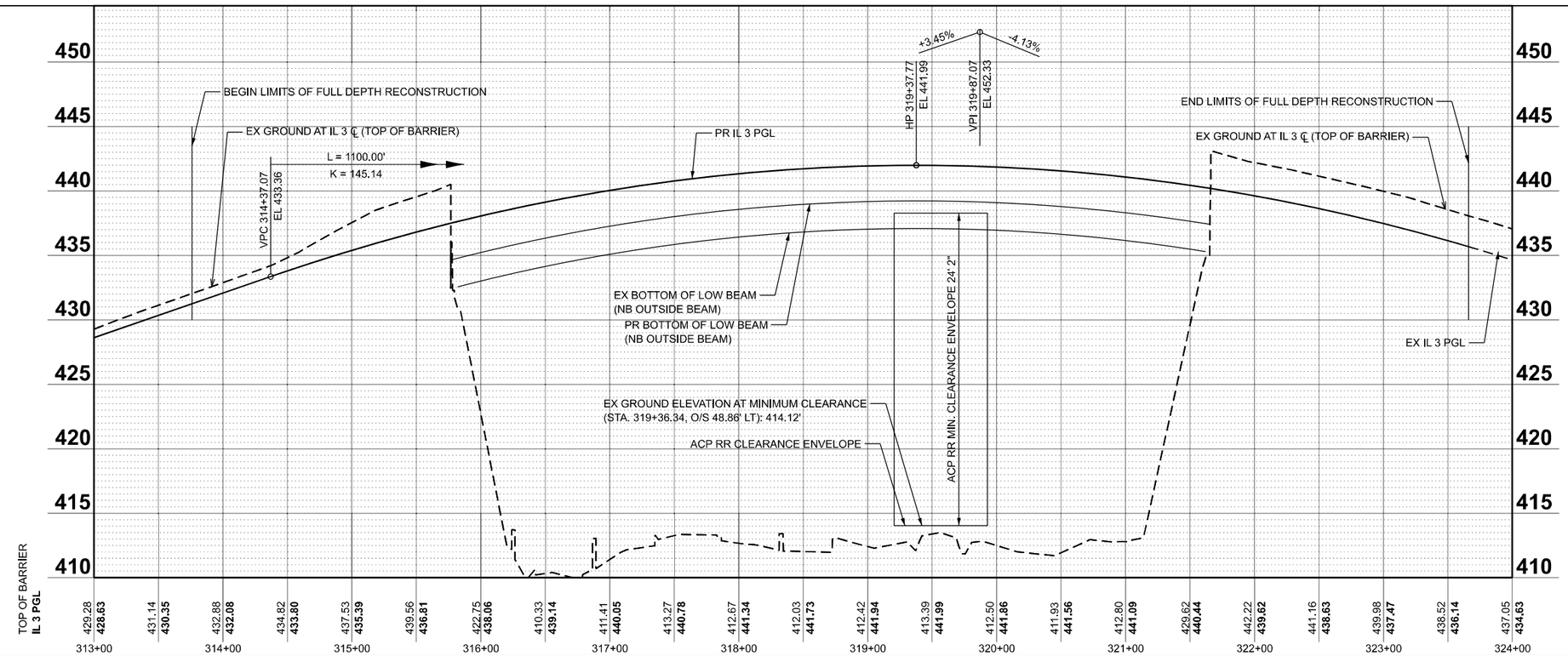

NOTES

1. SEE STRUCTURAL SHEETS FOR BRIDGE IMPROVEMENT DETAILS.

MODEL: CL_IL3 - Plan 2-1
FILE NAME: pw://hq-pwin01.a-e.transyscorp.com:transyscorp-pw1:Documents/Projects_2020/CH401401200165/Road/303.04 - Standard Sheets/06 - Road Plan & Profiles/D876N65-sht-plnprf.dgn

TRANSYSTEMS

USER NAME = mbmcwhorter	DESIGNED - MBM	REVISED -	
	DRAWN - MBM	REVISED -	
	CHECKED - KKY	REVISED -	
PLOT DATE = 10/15/2025	DATE - 10/15/2025	REVISED -	

STATE OF ILLINOIS
DEPARTMENT OF TRANSPORTATION

ILLINOIS 3 OVER PORT DISTRICT RAILYARD
ROADWAY PLAN AND PROFILE

SCALE: 50 SCALE | SHEET 2 OF 3 SHEETS | STA. 313+00 TO STA. 324+00

F.A.P RTE.	SECTION	COUNTY	TOTAL SHEETS	SHEET NO.
0002	(103,104)BR-1	MADISON	178	23
		CONTRACT NO. 76N65		
		ILLINOIS	FED. AID PROJECT	

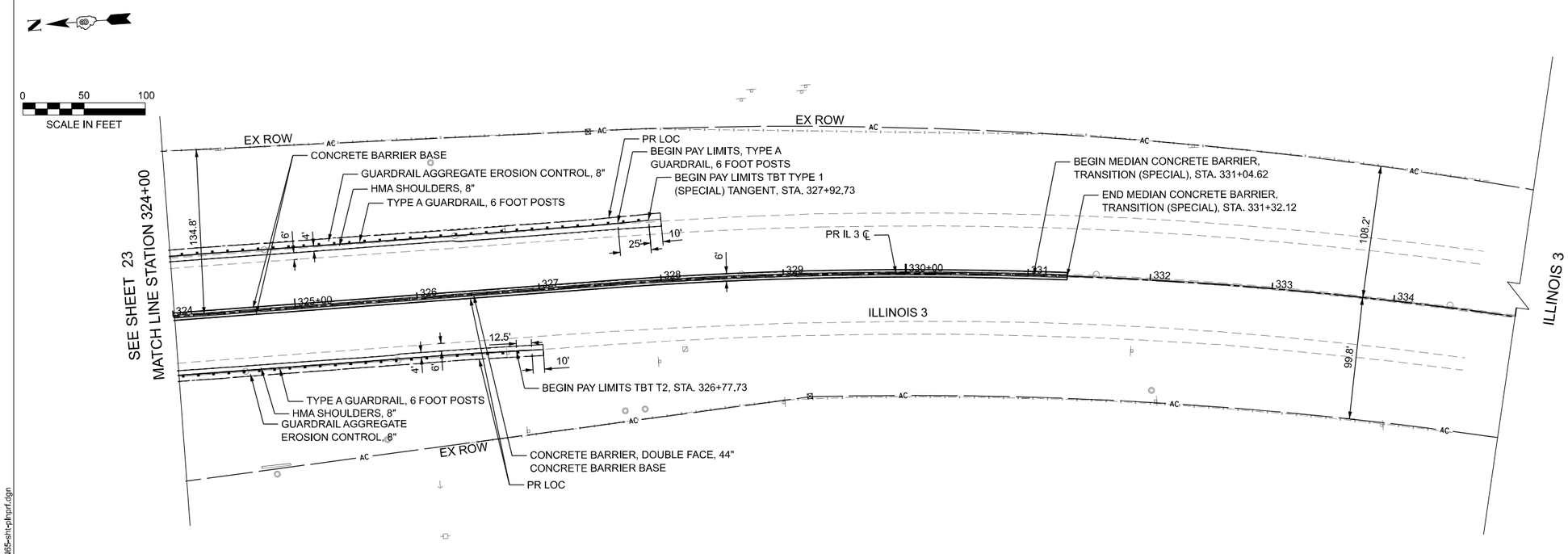

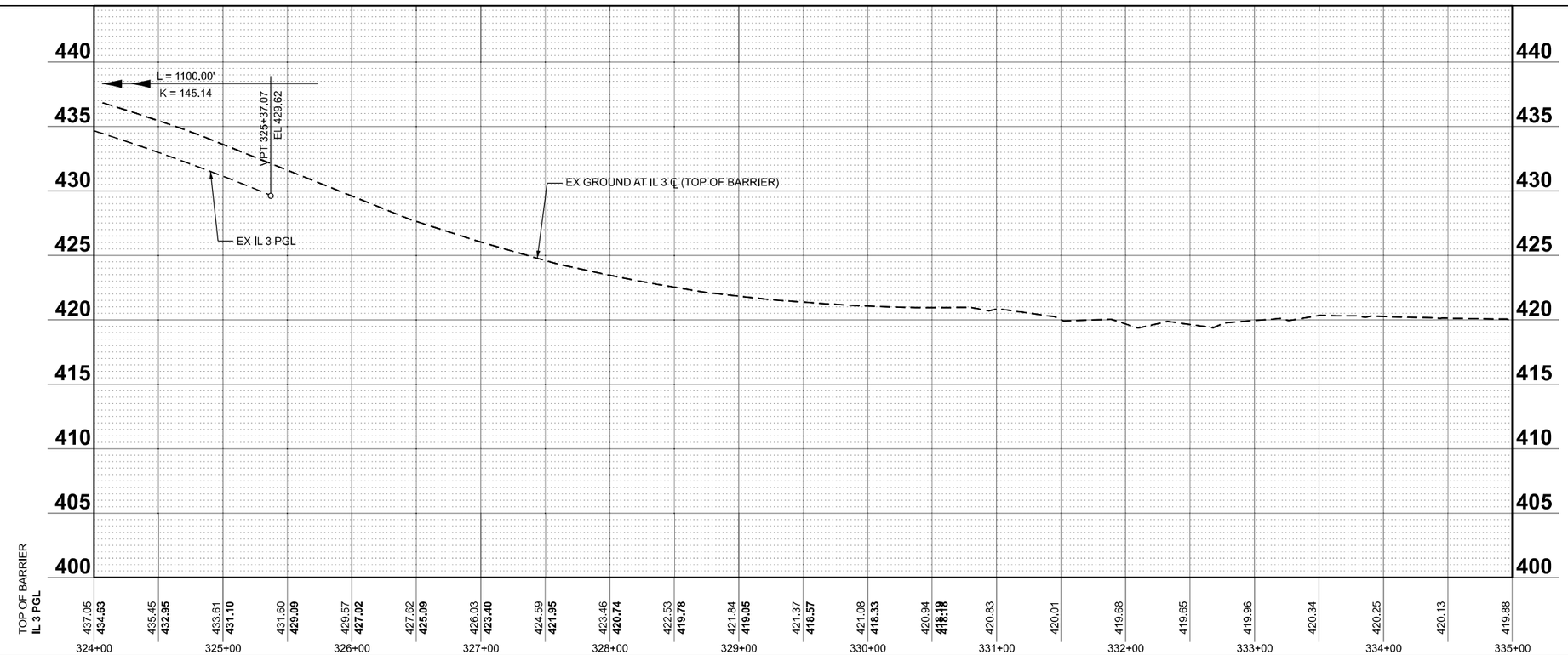

NOTES

1. SEE STRUCTURAL SHEETS FOR BRIDGE IMPROVEMENT DETAILS.

MODEL: CL_IL3 - Plan 3-1
FILE NAME: pw://hq-pwin01.a-e.transyscorp.com:transyscorp-pw1/Documents/Projects_2020/CH401401200165/Road/303.04 - Standard Sheets/06 - Road Plan & Profiles/D876N65-sht-pltnprf.dgn

TRANSYSTEMS

USER NAME = mbmcwhorter	DESIGNED - MBM	REVISED -	
	DRAWN - MBM	REVISED -	
	CHECKED - KKY	REVISED -	
PLOT DATE = 11/20/2025	DATE - 10/15/2025	REVISED -	

STATE OF ILLINOIS
DEPARTMENT OF TRANSPORTATION

ILLINOIS 3 OVER PORT DISTRICT RAILYARD
ROADWAY PLAN AND PROFILE

SCALE: 50 SCALE | SHEET 3 OF 3 SHEETS | STA. 324+00 | TO STA. 335+00

F.A.P RTE.	SECTION	COUNTY	TOTAL SHEETS	SHEET NO.
0002	(103,104)BR-1	MADISON	178	24
		CONTRACT NO. 76N65		
		ILLINOIS	FED. AID PROJECT	

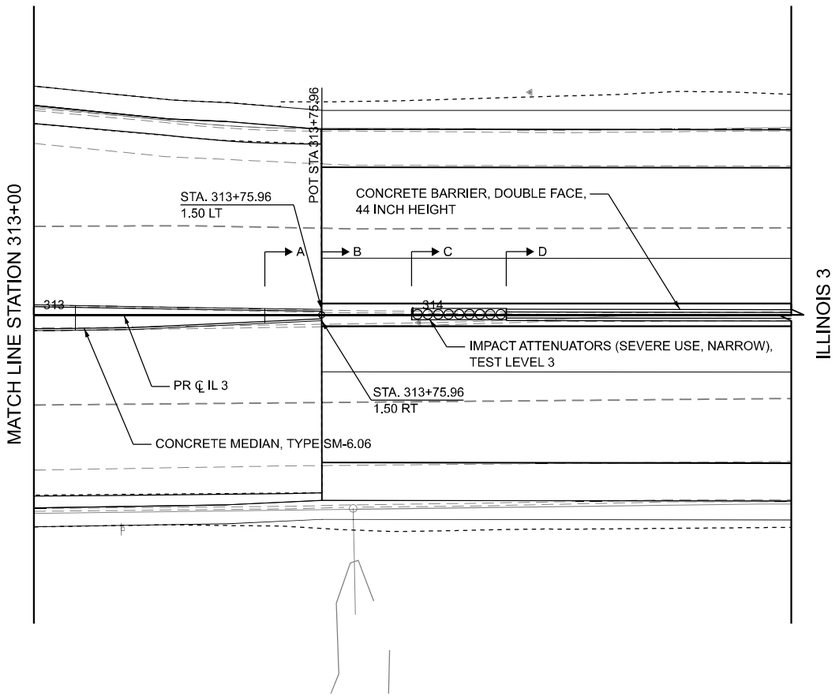

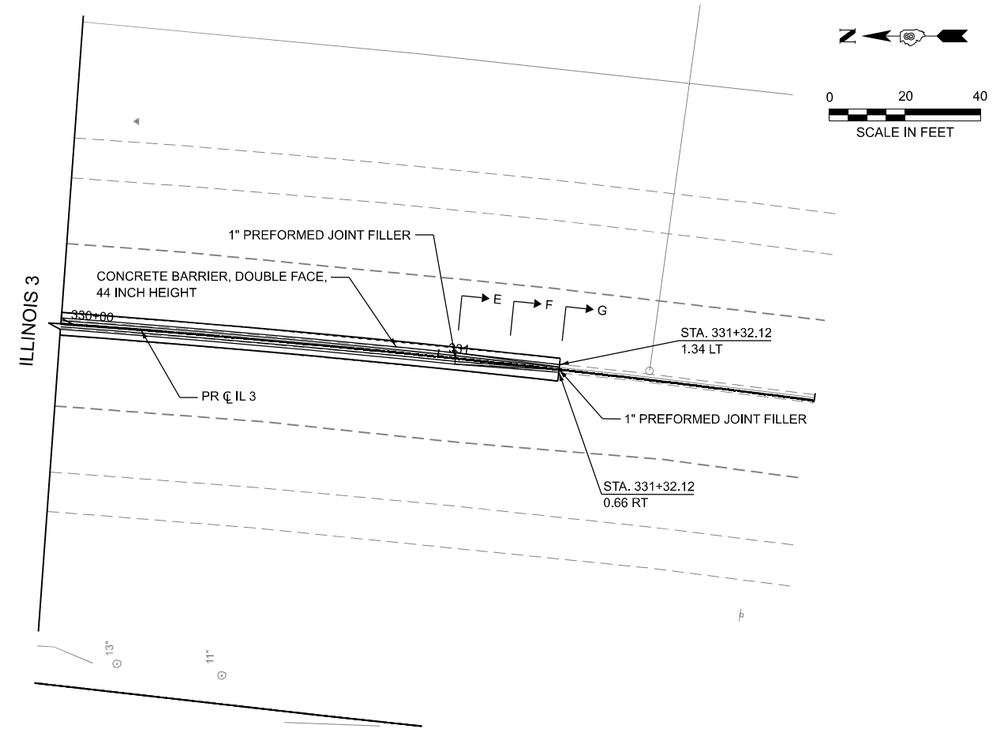

PLAN

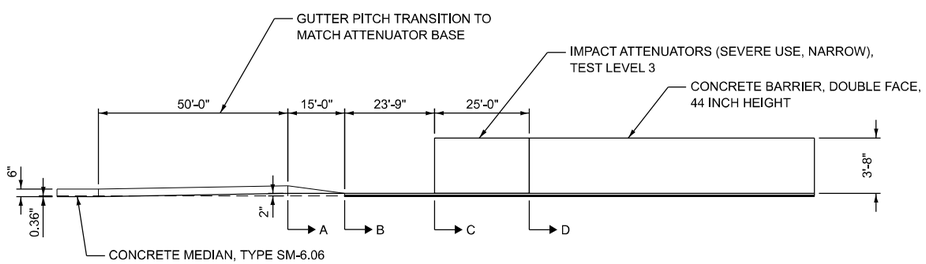

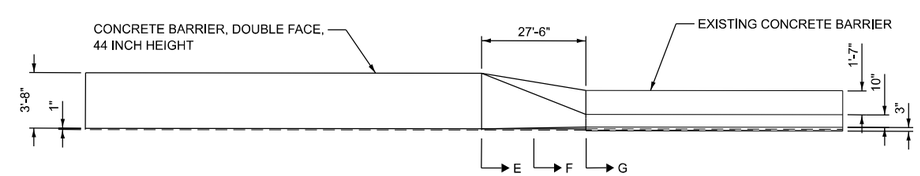

ELEVATION
NOT TO SCALE

MODEL: CL_IL13 - Plan 1 [Sheet]
FILE NAME: pw://hq-pwin101.a-e-b.transyscorp.com:transyscorp-pw1/Documents/Projects_2020/CH401/401200165/Road/303.04 - Standard Sheets/07 - Road Details/0165-CON-MEDIAN_BARRIER_TRANSITION.dgn

Kaskaskia Engineering Group, LLC

USER NAME = mbmcwhorter	DESIGNED - ZRB	REVISED -	
	DRAWN - ZRB	REVISED -	
	CHECKED - EJL	REVISED -	
PLOT DATE = 10/15/2025	DATE - 10/15/2025	REVISED -	

STATE OF ILLINOIS
DEPARTMENT OF TRANSPORTATION

ILLINOIS 3 OVER PORT DISTRICT RAILYARD
MEDIAN BARRIER WALL TRANSITION DETAIL

SCALE: NTS | SHEET 1 OF 2 SHEETS | STA. TO STA.

F.A.P RTE.	SECTION	COUNTY	TOTAL SHEETS	SHEET NO.
0002	(103,104)BR-1	MADISON	178	25
		CONTRACT NO. 76N65		
	ILLINOIS	FED. AID PROJECT		

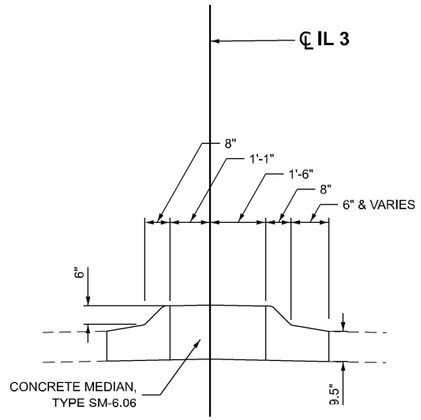

SECTION A-A

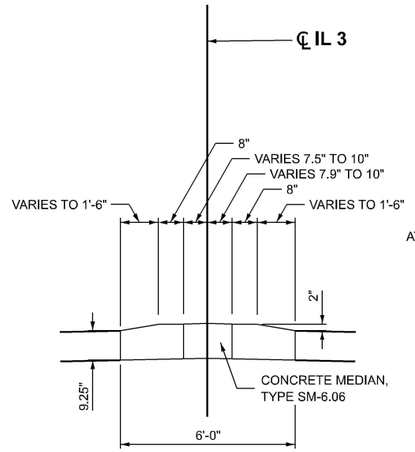

SECTION B-B

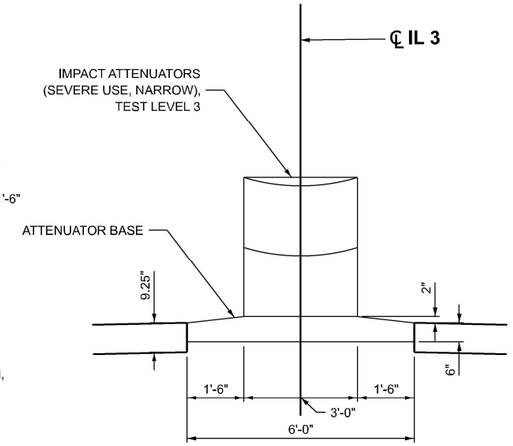

SECTION C-C

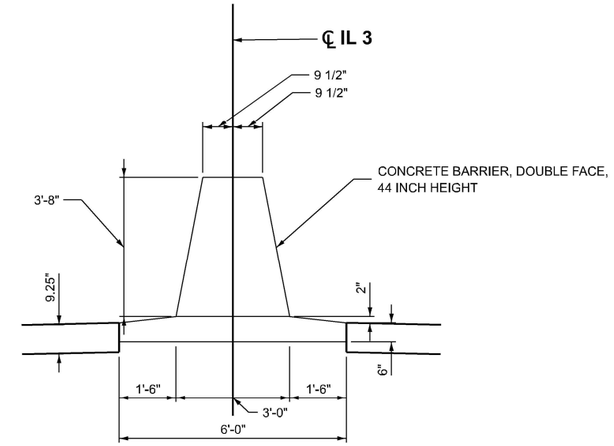

SECTION D-D

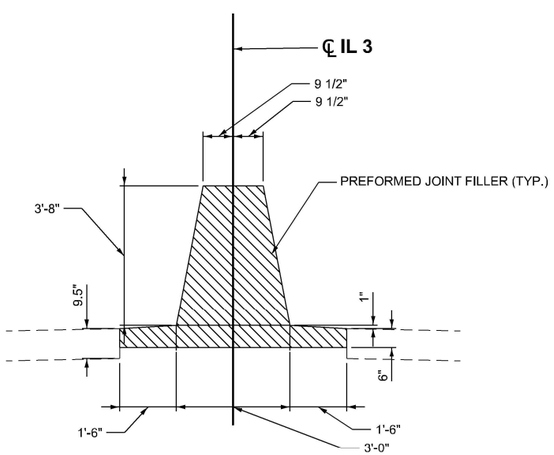

SECTION E-E

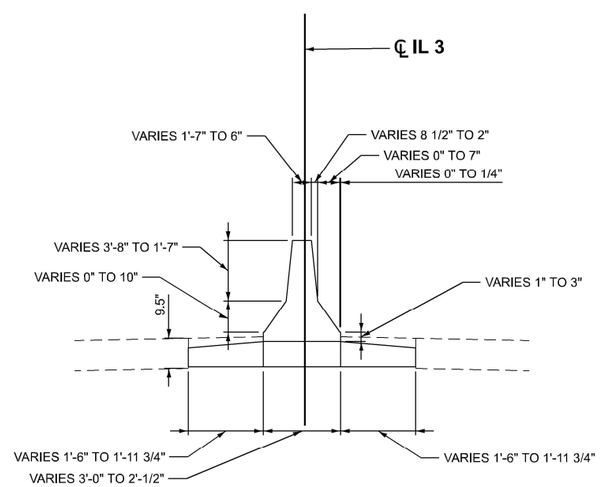

SECTION F-F

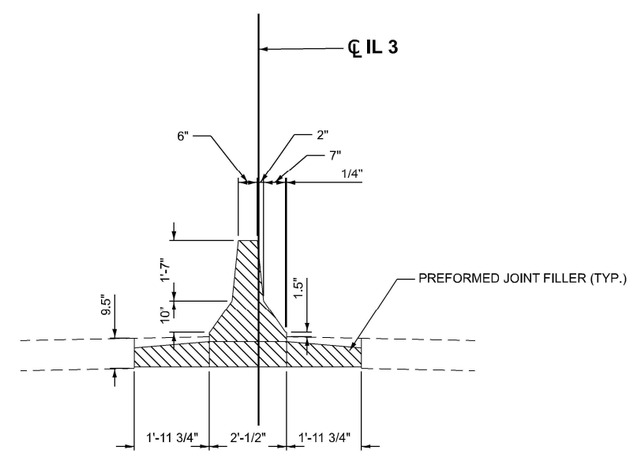

SECTION G-G

MODEL: CL_IL13 - Plan 2 [Sheet]
FILE NAME: pw://fhq-pwinfo1.a-e.transyscorp.com:transyscorp-pw1/Documents/Projects_2020/CH401/401200165/Road/303.04 - Standard Sheets/07 - Road Details/0165-CON-MEDIAN_BARRIER_TRANSITION.dgn

Kaskaskia Engineering Group, LLC

USER NAME = mbmcwhorter	DESIGNED - ZRB	REVISED -	
	DRAWN - ZRB	REVISED -	
	CHECKED - EJL	REVISED -	
PLOT DATE = 10/15/2025	DATE - 10/15/2025	REVISED -	

STATE OF ILLINOIS
DEPARTMENT OF TRANSPORTATION

ILLINOIS 3 OVER PORT DISTRICT RAILYARD
MEDIAN BARRIER WALL TRANSITION DETAIL

SCALE: NTS | SHEET 2 OF 2 SHEETS | STA. TO STA.

F.A.P RTE.	SECTION	COUNTY	TOTAL SHEETS	SHEET NO.
0002	(103,104)BR-1	MADISON	178	26
		CONTRACT NO. 76N65		
	ILLINOIS	FED. AID PROJECT		

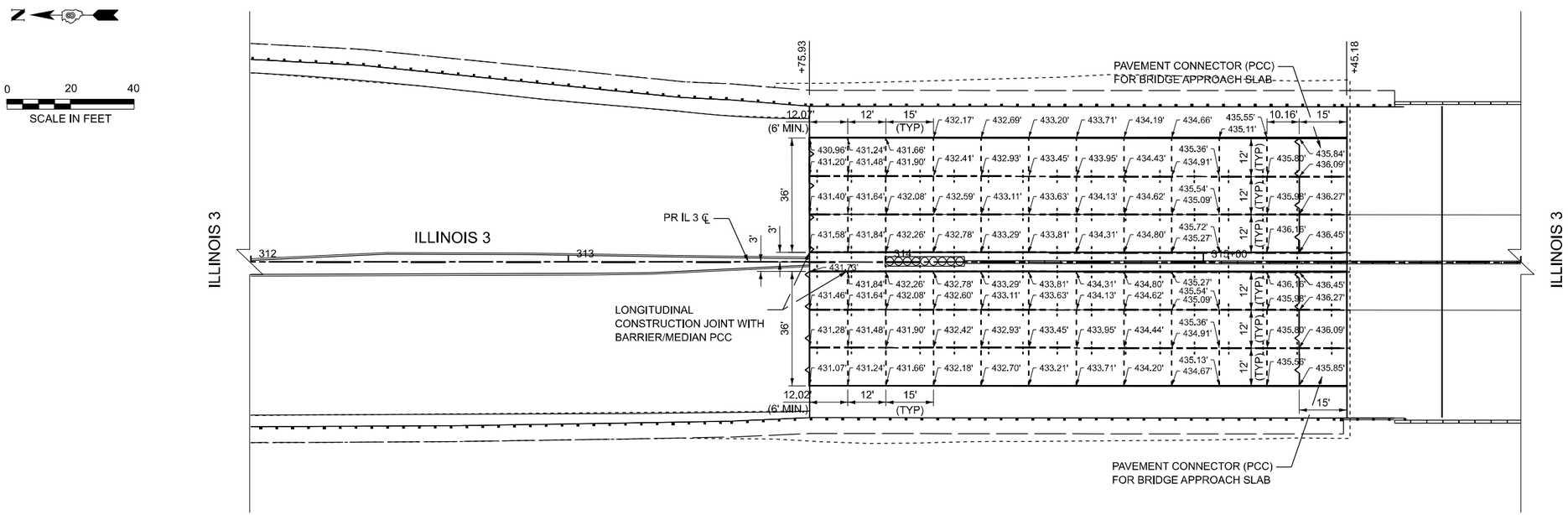

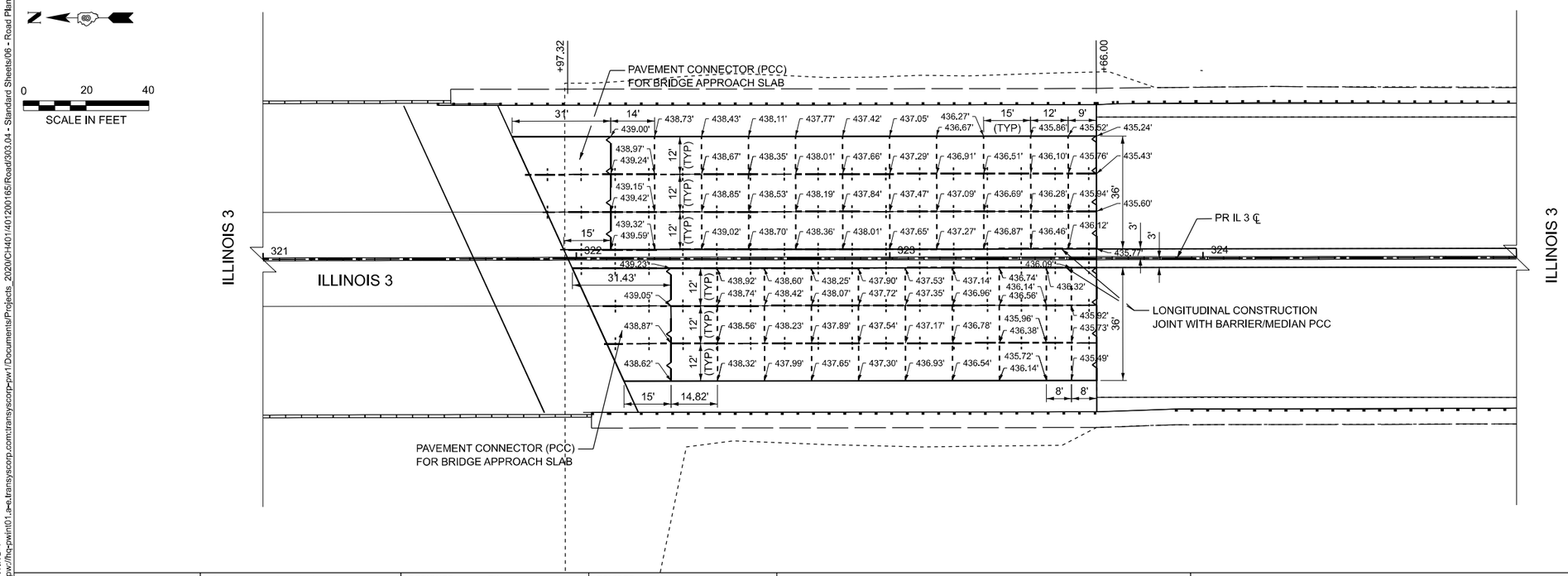

LEGEND

- TRANSVERSE CONTRACTION JOINT
- LONGITUDINAL JOINT
- TRANSVERSE EXPANSION JOINT

NOTE:
JOINTED PCC PAVEMENT SHALL BE CONSTRUCTED AS SHOWN ON HIGHWAY STANDARD 420106.

PAVEMENT CONNECTOR FOR BRIDGE APPROACH SLAB SHALL BE CONSTRUCTED AS SHOWN ON HIGHWAY STANDARD 420401.

JOINTING ELEVATION DESIGN TO BE PROVIDED FOR PRE-FINAL AFTER PAVEMENT DESIGN COMPLETED

MODEL: JOINTING-1
FILE NAME: pw://hq-pwint01.ae.transyscorp.com:transyscorp-pw1/Documents/Projects_2020/CH401/401200165/Road/303.04 - Standard Sheets/06 - Road Plan & Profile/D876N65-sht-pvtjoint.dgn

TERRA ENGINEERING LTD.

USER NAME = mbmcwhorter	DESIGNED - TW	REVISED -	
	DRAWN - TW	REVISED -	
	CHECKED - CCC	REVISED -	
PLOT DATE = 10/15/2025	DATE - 10/15/2025	REVISED -	

STATE OF ILLINOIS
DEPARTMENT OF TRANSPORTATION

ILLINOIS 3 OVER PORT DISTRICT RAILYARD
JOINTING PLAN

SCALE: 1"=20' | SHEET 1 OF 1 SHEETS | STA. 312+00 TO STA. 327+00

F.A.P RTE.	SECTION	COUNTY	TOTAL SHEETS	SHEET NO.
0002	(103,104)BR-1	MADISON	178	27

CONTRACT NO. 76N65

ILLINOIS | FED. AID PROJECT

LEGEND:

PRE-STAGE 1B

STAGE 1

STAGE 2

STAGE 3
AND PRESTAGE 1A

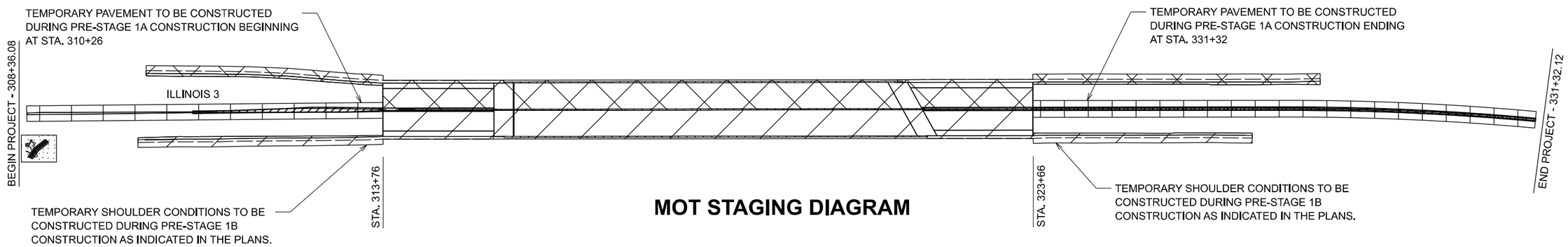

MOT STAGING DIAGRAM

MAINTENANCE OF TRAFFIC SCHEDULE OF QUANTITIES

DESCRIPTION	UNIT	QUANTITY
MODULAR GLARE SCREEN SYSTEM, TEMPORARY	FOOT	2,749
TRAFFIC CONTROL SURVEILLANCE	CAL DA	540
CHANGEABLE MESSAGE SIGN	CAL DA	56
TEMPORARY PAVEMENT MARKING - LINE 6" - PAINT	FOOT	4,240
TEMPORARY PAVEMENT MARKING LETTERS AND SUMBOLS - TYPE IV TAPE	SQ FT	256
TEMPORARY PAVEMENT MARKING - LINE 6" - TYPE IV TAPE	FOOT	60,495
TEMPORARY PAVEMENT MARKING - LINE 12" - TYPE IV TAPE	FOOT	229
TEMPORARY PAVEMENT MARKING - LINE 24" - TYPE IV TAPE	FOOT	12
TEMPORARY CONCRETE BARRIER	FOOT	3,400
PINNING TEMPORARY CONCRETE BARRIER	EACH	474
RELOCATE TEMPORARY CONCRETE BARRIER	FOOT	2,988
IMPACT ATTENUATORS, TEMPORARY (NON-REDIRECTIVE), TEST LEVEL 3	EACH	2
IMPACT ATTENUATORS, RELOCATE (NON-REDIRECTIVE), TEST LEVEL 3	EACH	1
BARRIER WALL REFLECTORS, TYPE B	EACH	60
MAINTENANCE OF EXISTING TRAFFIC SIGNAL INSTALLATION	EACH	1
TEMPORARY PAVEMENT REMOVAL	SQ YD	618
TRAFFIC CONTROL AND PROTECTION, (SPECIAL)	L SUM	1
WIDTH RESTRICTION SIGNING	L SUM	1
TEMPORARY PAVEMENT	SQ YD	618

NOTE: QUANTITIES ARE APPROXIMATE FOR THE ITEMS ABOVE AND HAVE BEEN INCLUDED TO ESTABLISH UNIT PRICES. QUANTITIES MAY VARY BASED ON DIRECTION FROM THE ENGINEER AT THE TIME OF CONSTRUCTION.

NOTES:

1. SEE STANDARD 701101 FOR SHOULDER OPERATIONS LESS THAN 15' FROM EDGE OF TRAFFIC CONTROL MEASURES.

2. SEE STANDARD 701106 FOR SHOULDER OPERATIONS MORE THAN 15' FROM EDGE OF TRAFFIC CONTROL MEASURES.

3. SEE STANDARD 701400 FOR PLACEMENT OF CHANGEABLE MESSAGE BOARDS IN ADVANCE OF CROSSOVER STAGES FOR NORTHBOUND AND SOUTHBOUND TRAFFIC. CHANGEABLE MESSAGE BOARDS WILL BE OPERATIONAL 1 WEEK PRIOR AND 1 WEEK DURING THE TEMPORARY LANE CONFIGURATIONS.

4. SEE STANDARD 701416 FOR LANE CLOSURE WITH CROSSOVER AND BARRIER.

5. SEE STANDARD 701422 FOR SINGLE LANE CLOSURE AND ADVANCED SIGNAGE FOR ALL STAGES.

6. SEE STANDARD 701446 FOR TWO LANE CLOSURE.

7. SEE STANDARD 701901 FOR TRAFFIC CONTROL DEVICES.

8. SEE STANDARD 704001 FOR TEMPORARY CONCRETE BARRIER.

PRE-STAGE 1A TRAFFIC CONTROL:

1. THE INSIDE THROUGH LANE OF BOTH NORTHBOUND AND SOUTHBOUND ILLINOIS 3 TRAFFIC WILL BE DROPPED TO PROVIDE A WORK ZONE ALONG THE MEDIAN (NORTH OF THE BRIDGE) AND CONCRETE BARRIER WALL (SOUTH OF THE BRIDGE). THE LANES WILL BE RETURNED TO EXISTING CONFIGURATION AFTER THE WORK ZONE.

PRE-STAGE 1B TRAFFIC CONTROL:

1. UPON COMPLETION OF MEDIAN CONSTRUCTION, THE OUTSIDE THROUGH LANE OF SOUTHBOUND ILLINOIS 3 TRAFFIC WILL BE DROPPED TO PROVIDE A WORK ZONE ALONG THE SHOULDER (NORTH AND SOUTH OF THE BRIDGE). THE LANES WILL BE RETURNED TO EXISTING CONFIGURATION AFTER THE WORK ZONE.

2. THE RIGHT TURN LANE FROM EASTBOUND NIEDRINGHAUS AVENUE WILL BE CLOSED. THE SOUTHERN EASTBOUND THROUGH LANE AT NIEDRINGHAUS WILL BE UTILIZED AS AN OPTION THROUGH AND RIGHT TURN LANE WHILE THE EXISTING RIGHT TURN LANE IS CLOSED.

STAGE 1 TRAFFIC CONTROL:

1. NORTHBOUND LANES ON ILLINOIS 3 WILL BE REDUCED FROM 3 LANES TO 1 LANE, THEN THE NORTHBOUND LANE WILL CROSSOVER TO THE EXISTING SOUTHBOUND PAVEMENT. NORTHBOUND TRAFFIC WILL USE THE EASTERN MOST LANE OF THE EXISTING SOUTHBOUND PAVEMENT ACROSS THE BRIDGE, THEN CROSSOVER TO EXISTING NORTHBOUND PAVEMENT TO THE SOUTH OF THE INTERSECTION WITH NIEDRINGHAUS AVENUE. AT THE INTERSECTION THE NORTHBOUND APPROACH WILL CONSIST OF 1 LEFT TURN LANE, 2 THROUGH LANES, AND 1 RIGHT TURN LANE. THE NORTHBOUND TRAFFIC WILL RETURN TO 3 THROUGH LANES NORTH OF THE INTERSECTION.

2. SOUTHBOUND LANES ON ILLINOIS 3 WILL BE REDUCED FROM 3 LANES TO 2 LANES, THEN WILL USE THE WESTERN MOST 2 LANES ON THE EXISTING SOUTHBOUND PAVEMENT ACROSS THE BRIDGE, RETURNING TO 3 LANES AFTER THE WORK ZONE.

3. THE BIKE PATH CONNECTING CHICAGO STREET AND 1ST STREET WILL BE CLOSED AS NECESSARY FOR CONSTRUCTION. MADISON COUNTY TRANSIT FACILITY DIRECTOR IS TO BE NOTIFIED OF CLOSURE AT LEAST 1 WEEK PRIOR TO ANY CLOSURE OF THE BIKE PATH.

STAGE 2 TRAFFIC CONTROL:

1. NORTHBOUND LANES ON ILLINOIS 3 WILL BE REDUCED FROM 3 LANES TO 1 LANE, THEN WILL USE THE EASTERN MOST LANE OF THE NEWLY CONSTRUCTED NORTHBOUND PAVEMENT ACROSS THE BRIDGE. AT THE INTERSECTION WITH NIEDRINGHAUS AVENUE THE NORTHBOUND APPROACH WILL CONSIST OF 1 LEFT TURN LANE, 2 THROUGH LANES AND 1 RIGHT TURN LANE. THE NORTHBOUND TRAFFIC WILL RETURN TO 3 LANES NORTH OF THE INTERSECTION.

2. SOUTHBOUND LANES ON ILLINOIS 3 WILL BE REDUCED FROM 3 LANES TO 2 LANES, THEN THE 2 SOUTHBOUND LANES WILL CROSSOVER TO THE NEWLY CONSTRUCTED NORTHBOUND PAVEMENT TO THE SOUTH OF THE INTERSECTION WITH NIEDRINGHAUS AVENUE. SOUTHBOUND TRAFFIC WILL USE THE WESTERN MOST 2 LANES OF NEWLY CONSTRUCTED PAVEMENT ACROSS THE BRIDGE AND THEN CROSSOVER TO EXISTING SOUTHBOUND PAVEMENT AFTER THE WORK ZONE.

3. THE BIKE PATH CONNECTING CHICAGO STREET AND 1ST STREET WILL BE CLOSED AS NECESSARY FOR CONSTRUCTION. MADISON COUNTY TRANSIT FACILITY DIRECTOR IS TO BE NOTIFIED OF CLOSURE AT LEAST 1 WEEK PRIOR TO ANY CLOSURE OF THE BIKE PATH.

STAGE 3 TRAFFIC CONTROL:

1. THE INSIDE THROUGH LANE OF BOTH NORTHBOUND AND SOUTHBOUND ILLINOIS 3 TRAFFIC WILL BE DROPPED TO PROVIDE A WORK ZONE ALONG THE MEDIAN (NORTH OF THE BRIDGE) AND CONCRETE BARRIER WALL (SOUTH OF THE BRIDGE). THE LANES WILL BE RETURNED TO EXISTING CONFIGURATION AFTER THE WORK ZONE.

PRE-STAGE 1S CONSTRUCTION:

1. THE MEDIAN (NORTH OF THE BRIDGE) AND CONCRETE BARRIER WALL (SOUTH OF THE BRIDGE) WILL BE REMOVED THROUGH LIMITS SHOWN IN THE PRE-STAGE CONFIGURATION. TEMPORARY PAVEMENT IS TO BE INSTALLED TO FACILITATE SUBSEQUENT CROSSOVER STAGING.

PRE-STAGE 1B CONSTRUCITON:

1. SHOULDER CONSTRUCTION WILL BE CONSISTING OF INLET REMOVAL, CURB REMOVAL (SPECIAL), GUARDRAIL AGGREGATE EROSION CONTROL, AND CLASS C PATCHING. SPECIAL ATTENTION SHALL BE GIVEN TO THE MAINTENANCE OF EXISTING GUARDRAIL DURING CONSTRUCTION.

2. THE EXISTING MANHOLE STRUCTURE AT SW NIEDRINGHAUS WILL BE LOCATED, REMOVED, AND REPLACED AS INDICATED IN THE PLANS. THE SW STORM SEWER CONNECTION WILL ADDITIONALLY RECEIVE A COMPLETE REPLACEMENT. FURTHER STORM SEWER CONNECTIONS TO THE EXISTING MANHOLE STRUCTURE WILL BE REHABILITATED TO ACCOMMODATE THE NEW MANHOLE STRUCTURE.

STAGE 1 CONSTRUCTION:

1. THE EAST SIDE OF EXISTING BRIDGE SUPERSTRUCTURE WILL BE REMOVED AND RECONSTRUCTED. STAGE 1 SUPERSTRUCTURE CONSTRUCTION INCLUDES INSTALLATION OF SCUPPERS WITH REPLACEMENT OF THE EASTERN PARAPET AND CENTRAL DIVIDING CONCRETE BARRIER WALL ALONG THE BRIDGE DECK. ADDITIONALLY, EAST SIDE GUARDRAIL AND RESPECTIVE SHOULDER ARE TO BE RECONSTRUCTED DURING THIS STAGE.

STAGE 2 CONSTRUCTION:

1. THE WEST SIDE OF EXISTING BRIDGE SUPERSTRUCTURE WILL BE REMOVED AND RECONSTRUCTED. STAGE 2 SUPERSTRUCTURE CONSTRUCTION INCLUDES INSTALLATION OF SCUPPERS WITH REPLACEMENT OF THE WESTERN PARAPET. ADDITIONALLY, WEST SIDE GUARDRAIL AND RESPECTIVE SHOULDER ARE TO BE RECONSTRUCTED DURING THIS STAGE.

STAGE 3 CONSTRUCTION:

1. TEMPORARY PAVEMENT FROM CROSSOVERS (NORTH AND SOUTH OF THE BRIDGE) AND REMAINING MEDIAN UP TO THE INTERSECTION WITH NIEDRINGHAUS AVENUE (NORTH OF THE BRIDGE) WILL BE REMOVED. THE MEDIAN (NORTH OF THE BRIDGE) AND CONCRETE BARRIER WALL (SOUTH OF THE BRIDGE) WILL BE RECONSTRUCTED THROUGH LIMITS SHOWN IN THE STAGE 3 CONFIGURATION.

LEGEND

- EXISTING STRUCTURE
- EXISTING STRUCTURE TO BE REMOVED
- PROPOSED STRUCTURE

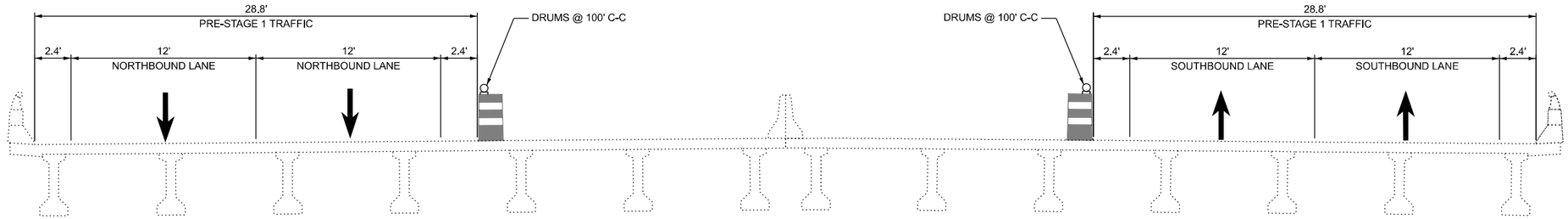

PRE-STAGE 1 CONSTRUCTION
(Looking South)

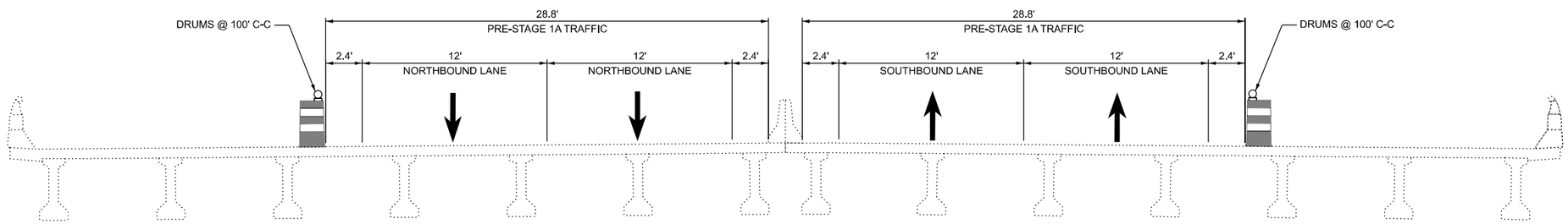

PRE-STAGE 1A CONSTRUCTION
(Looking South)

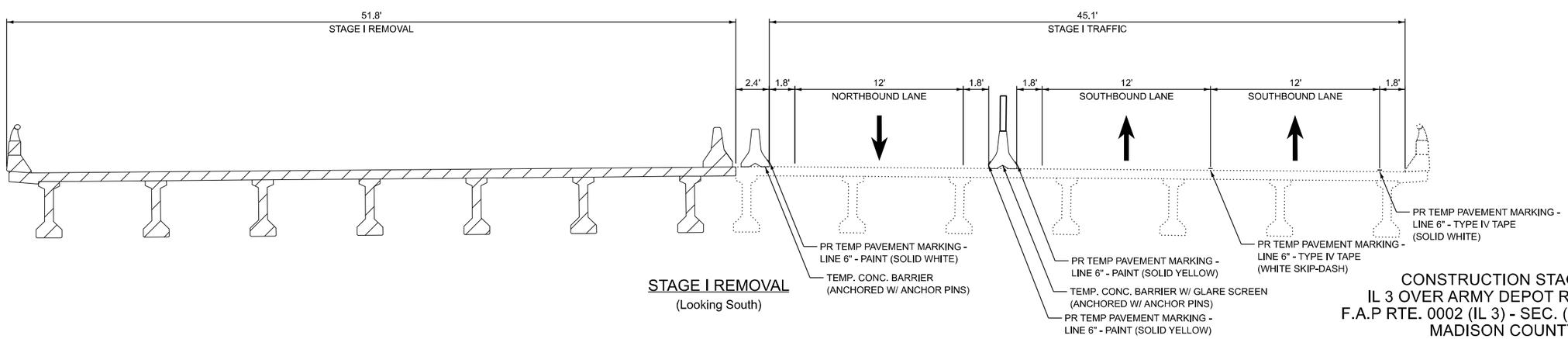

STAGE I REMOVAL
(Looking South)

CONSTRUCTION STAGING
IL 3 OVER ARMY DEPOT RAILROAD
F.A.P RTE. 0002 (IL 3) - SEC. (103,104)BR-1
MADISON COUNTY
STATION 313+76 TO 323+66
STRUCTURE NO. 060-0202

MODEL: Default
FILE NAME: pw://hq-cwin01.a-e.transyscorp.com:transyscorp-pw1/Documents/Projects_2020/CH401401200165/Road/303.04 - Standard Sheets/08 - MOT/D876N65-sht-typical1.dgn

TERRA ENGINEERING LTD.

USER NAME = mbmcwhorter	DESIGNED - TLH	REVISED -	
	DRAWN - TLH	REVISED -	
	CHECKED - NS	REVISED -	
PLOT DATE = 10/15/2025	DATE - 10/15/2025	REVISED -	

STATE OF ILLINOIS
DEPARTMENT OF TRANSPORTATION

ILLINOIS 3 OVER PORT DISTRICT RAILYARD
MAINTENANCE OF TRAFFIC - TYPICAL SECTIONS

SCALE: NONE | SHEET 1 OF 3 SHEETS | STA. TO STA.

F.A.P RTE.	SECTION	COUNTY	TOTAL SHEETS	SHEET NO.
0002	(103,104)BR-1	MADISON	178	30
		CONTRACT NO. 76N65		
		ILLINOIS	FED. AID PROJECT	

LEGEND

- EXISTING STRUCTURE
- EXISTING STRUCTURE TO BE REMOVED
- PROPOSED STRUCTURE

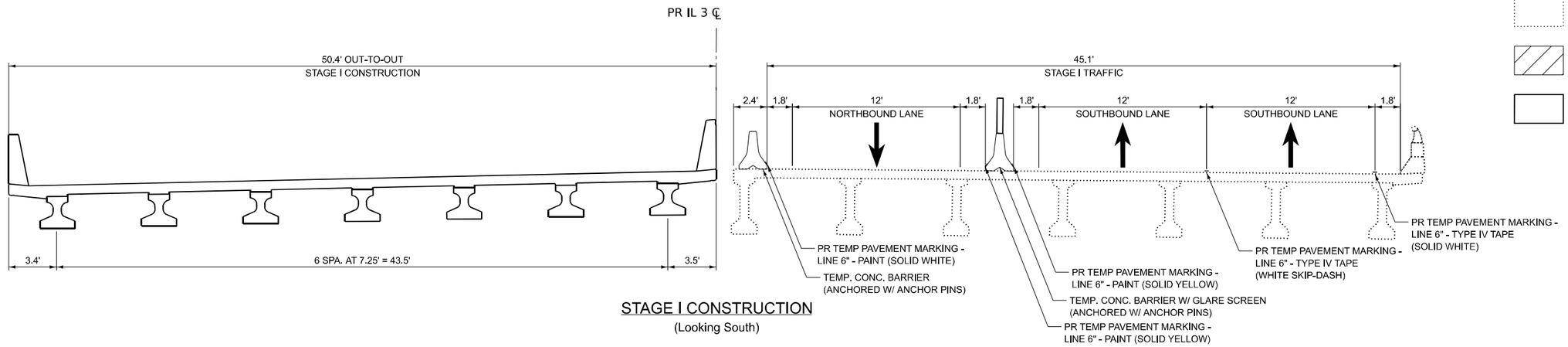

STAGE I CONSTRUCTION
(Looking South)

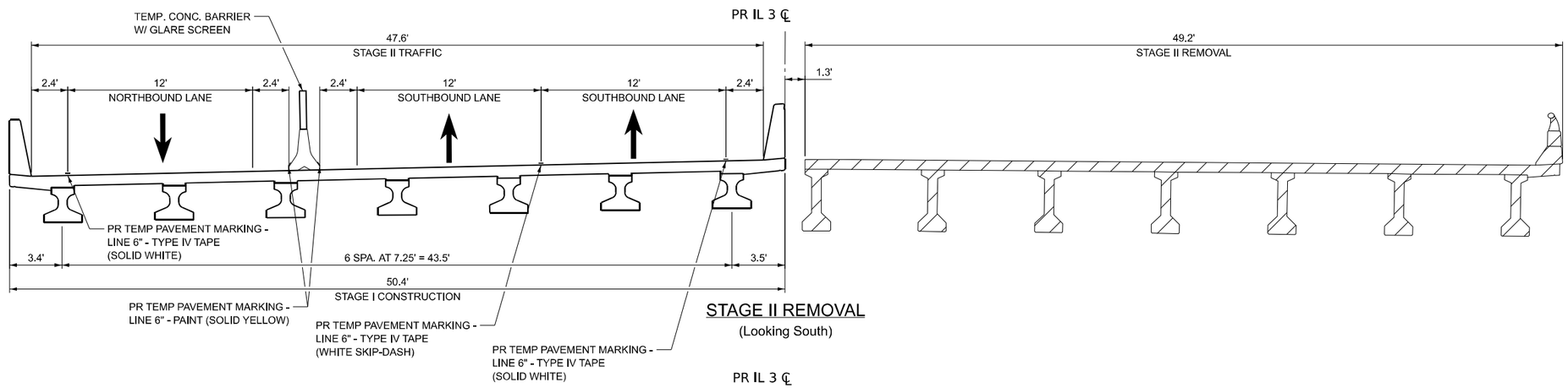

STAGE II REMOVAL
(Looking South)

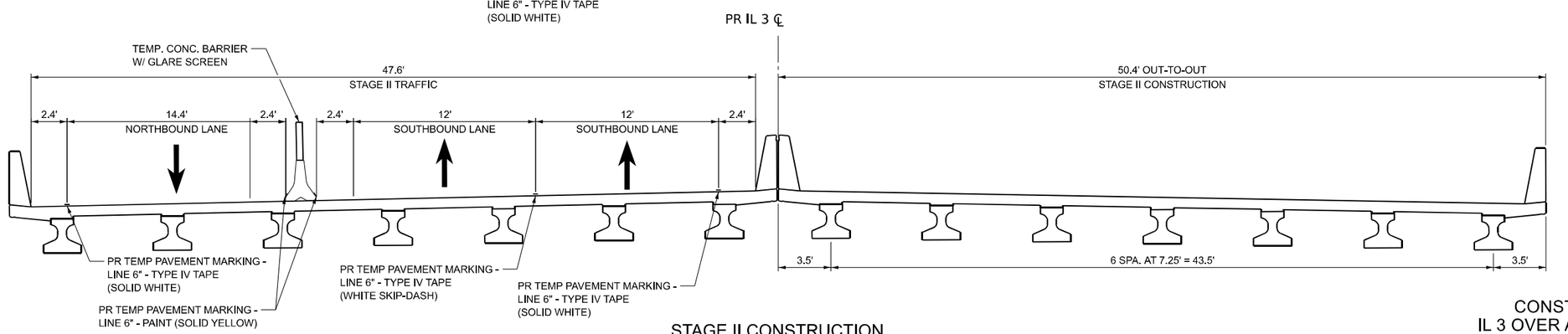

STAGE II CONSTRUCTION
(Looking South)

CONSTRUCTION STAGING
IL 3 OVER ARMY DEPOT RAILROAD
F.A.P RTE. 0002 (IL 3) - SEC. (103,104)BR-1
MADISON COUNTY
STATION 313+76 TO 323+66
STRUCTURE NO. 060-0202

MODEL: Default
FILE NAME: pw://hq-pwint01.a-e.transyscorp.com:transyscorp-pw1/Documents/Projects_2020/CH401401200165/Road/303.04 - Standard Sheets/08 - MOT/D876N65-sht-typical2.dgn

TERRA ENGINEERING LTD.

USER NAME = mbmcwhorter	DESIGNED - TLH	REVISED -	
	DRAWN - TLH	REVISED -	
	CHECKED - NS	REVISED -	
PLOT DATE = 10/15/2025	DATE - 10/15/2025	REVISED -	

STATE OF ILLINOIS
DEPARTMENT OF TRANSPORTATION

ILLINOIS 3 OVER PORT DISTRICT RAILYARD
MAINTENANCE OF TRAFFIC - TYPICAL SECTIONS

SCALE: NONE | SHEET 2 OF 3 SHEETS | STA. TO STA.

F.A.P RTE.	SECTION	COUNTY	TOTAL SHEETS	SHEET NO.
0002	(103,104)BR-1	MADISON	178	31
		CONTRACT NO. 76N65		
	ILLINOIS	FED. AID PROJECT		

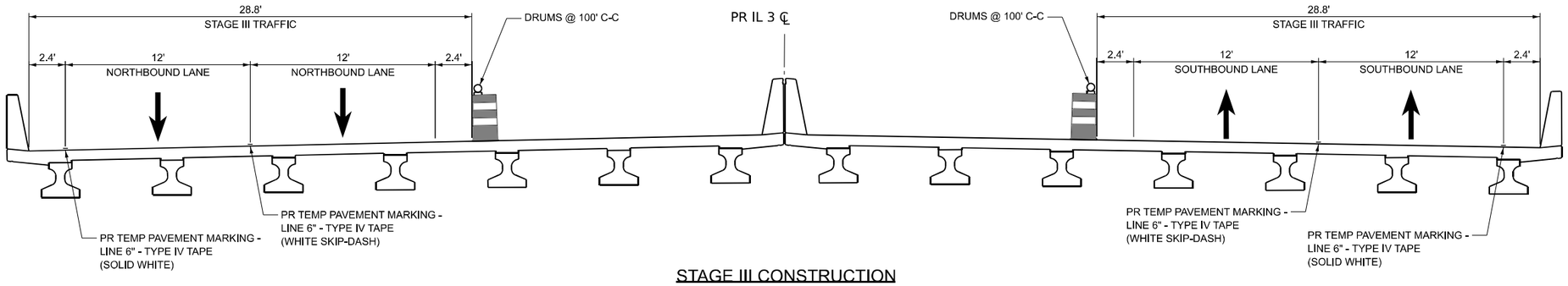

STAGE III CONSTRUCTION

(Looking South)

LEGEND

- EXISTING STRUCTURE
- EXISTING STRUCTURE TO BE REMOVED
- PROPOSED STRUCTURE

CONSTRUCTION STAGING
IL 3 OVER ARMY DEPOT RAILROAD
F.A.P RTE. 0003 (IL 3) - SEC. (103,104)BR-1
MADISON COUNTY
STATION 313+76 TO 323+66
STRUCTURE NO. 060-0303

MODEL: Default
FILE NAME: pw://ho-pwint01.ae.transyscorp.com:transyscorp-pw1/Documents/Projects_2020/CH401/401200165/Road/303.04 - Standard Sheets/08 - MOT/D876N65-sht-typical3.dgn

TERRA ENGINEERING LTD.

USER NAME = mbmcwhorter	DESIGNED - TLH	REVISED -	
	DRAWN - TLH	REVISED -	
	CHECKED - NS	REVISED -	
PLOT DATE = 10/15/2025	DATE - 10/15/2025	REVISED -	

STATE OF ILLINOIS
DEPARTMENT OF TRANSPORTATION

ILLINOIS 3 OVER PORT DISTRICT RAILYARD
MAINTENANCE OF TRAFFIC - TYPICAL SECTIONS

SCALE: NONE | SHEET 3 OF 3 SHEETS | STA. TO STA.

F.A.P RTE.	SECTION	COUNTY	TOTAL SHEETS	SHEET NO.
0002	(103,104)BR-1	MADISON	178	32
		CONTRACT NO. 76N65		
		ILLINOIS	FED. AID PROJECT	

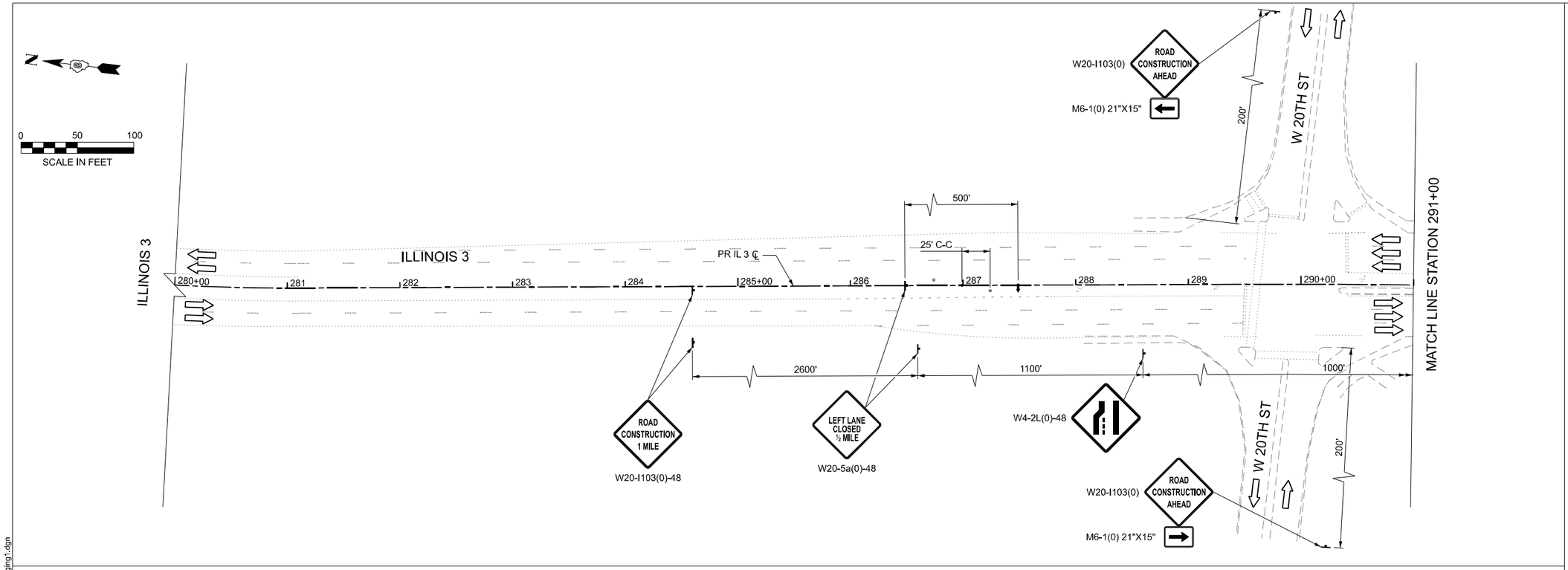

LEGEND

- DRUM WITH STEADY BURN MONODIRECTIONAL LIGHT
- TYPE II BARRICADE WITH STEADY BURN MONODIRECTIONAL LIGHT
- DIRECTION INDICATOR BARRICADE WITH STEADY BURN MONODIRECTIONAL LIGHT
- VERTICAL PANEL
- ARROW BOARD
- DIRECTION OF TRAFFIC
- TYPE III BARRICADE WITH FLASHING LIGHT (2- EA)
- TEMPORARY CONCRETE BARRIER
- IMPACT ATTENUATOR
- TEMPORARY PAVEMENT - PCC 9" DEPTH
- WORK AREA

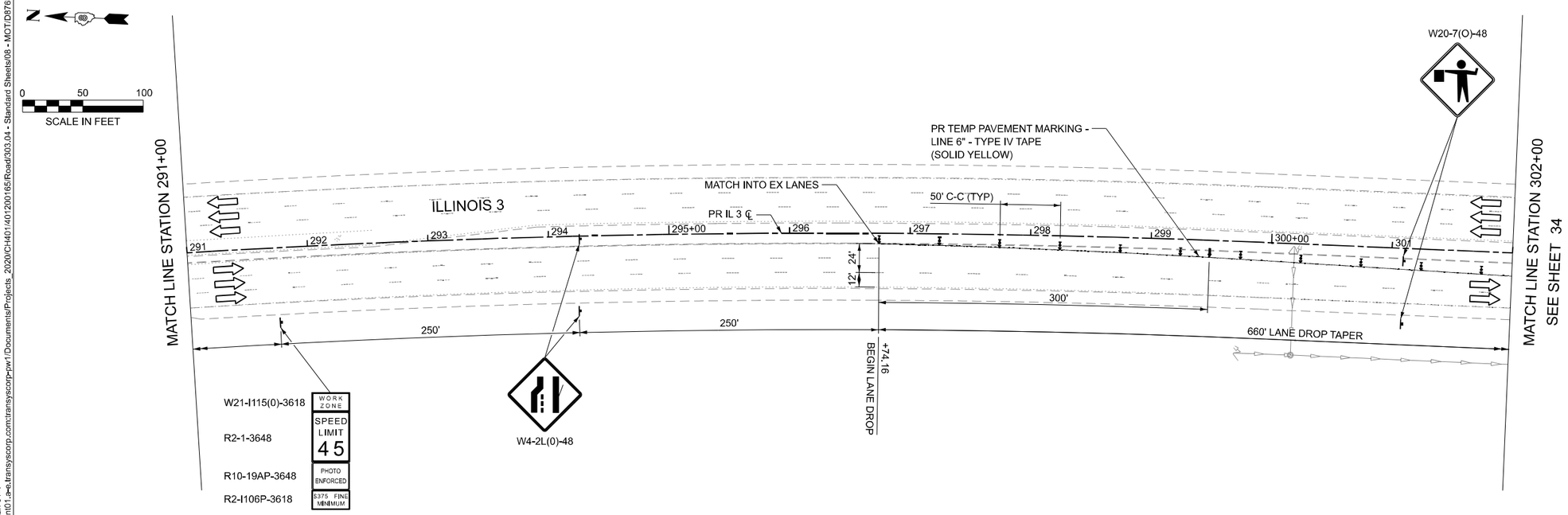

MODEL: IL3_MOT-1 - Plan 01-1
FILE NAME: pw://ho-pwin101.a-e.transyscorp.com:transyscorp-pw1/Documents/Projects_2020/CH401/401200165/Road/303.04 - Standard Sheets/08 - MOT/D876N65-sh1-staging1.dgn

TERRA ENGINEERING LTD.

USER NAME = mbmcwhorter	DESIGNED - TLH	REVISED -	
	DRAWN - TLH	REVISED -	
	CHECKED - NS	REVISED -	
PLOT DATE = 10/15/2025	DATE - 10/15/2025	REVISED -	

STATE OF ILLINOIS
DEPARTMENT OF TRANSPORTATION

ILLINOIS 3 OVER PORT DISTRICT RAILYARD
MAINTENANCE OF TRAFFIC PRE-STAGE 1A

SCALE: 1"=50' | SHEET 1 OF 4 SHEETS | STA. 280+00 TO STA. 302+00

F.A.P RTE.	SECTION	COUNTY	TOTAL SHEETS	SHEET NO.
0002	(103,104)BR-1	MADISON	178	33

CONTRACT NO. 76N65

ILLINOIS | FED. AID PROJECT

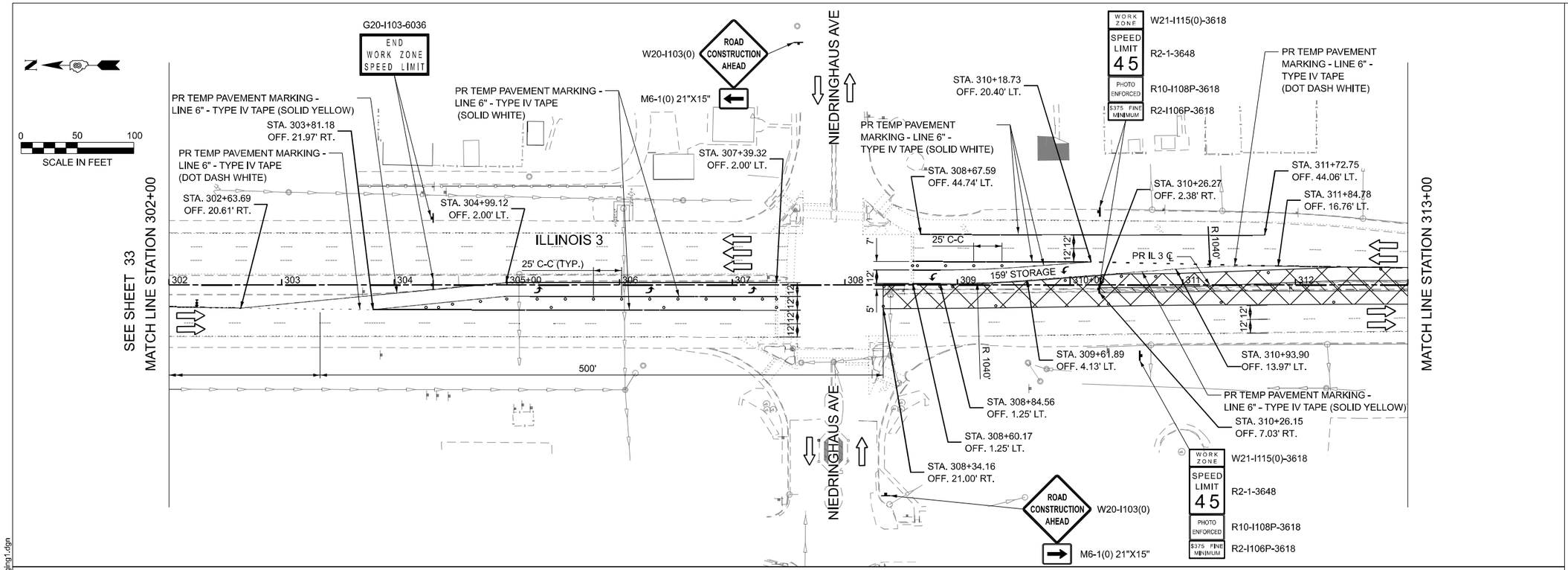

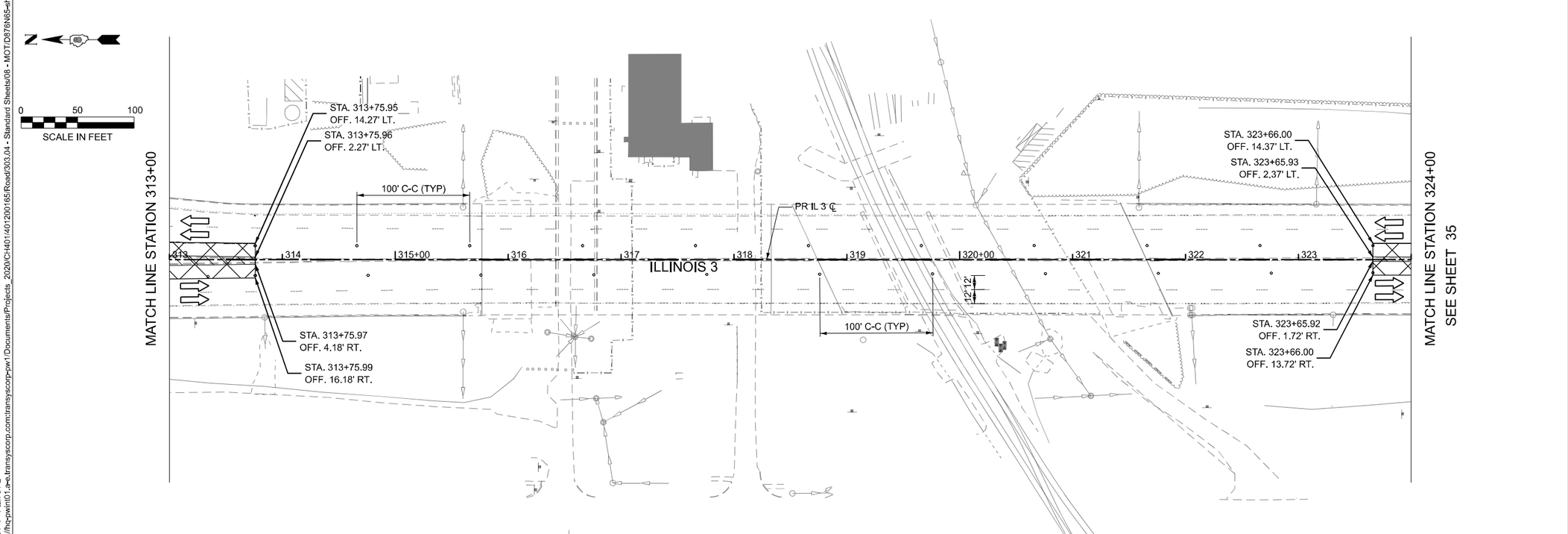

LEGEND

- DRUM WITH STEADY BURN MONODIRECTIONAL LIGHT
- TYPE II BARRICADE WITH STEADY BURN MONODIRECTIONAL LIGHT
- DIRECTION INDICATOR BARRICADE WITH STEADY BURN MONODIRECTIONAL LIGHT
- VERTICAL PANEL
- ARROW BOARD
- DIRECTION OF TRAFFIC
- TYPE III BARRICADE WITH FLASHING LIGHT (2- EA)
- TEMPORARY CONCRETE BARRIER
- IMPACT ATTENUATOR
- TEMPORARY PAVEMENT - PCC 9" DEPTH
- WORK AREA

MODEL: IL3_MOT-1 - Plan 01-2
FILE NAME: pw://ho-pwin101.a-e.transyscorp.com:transyscorp-pw1/Documents/Projects_2020/CH401/401200165/Road/303.04 - Standard Sheets/08 - MOT/D876N65-sht-staging1.dgn

TERRA ENGINEERING LTD.

USER NAME = mbmcwhorter	DESIGNED - TLH	REVISED -	
	DRAWN - TLH	REVISED -	
	CHECKED - NS	REVISED -	
PLOT DATE = 10/15/2025	DATE - 10/15/2025	REVISED -	

STATE OF ILLINOIS
DEPARTMENT OF TRANSPORTATION

ILLINOIS 3 OVER PORT DISTRICT RAILYARD
MAINTENANCE OF TRAFFIC PRE-STAGE 1A

SCALE: 1"=50' | SHEET 2 OF 4 SHEETS | STA. 302+00 TO STA. 324+00

F.A.P RTE.	SECTION	COUNTY	TOTAL SHEETS	SHEET NO.
0002	(103,104)BR-1	MADISON	178	34

CONTRACT NO. 76N65

ILLINOIS | FED. AID PROJECT

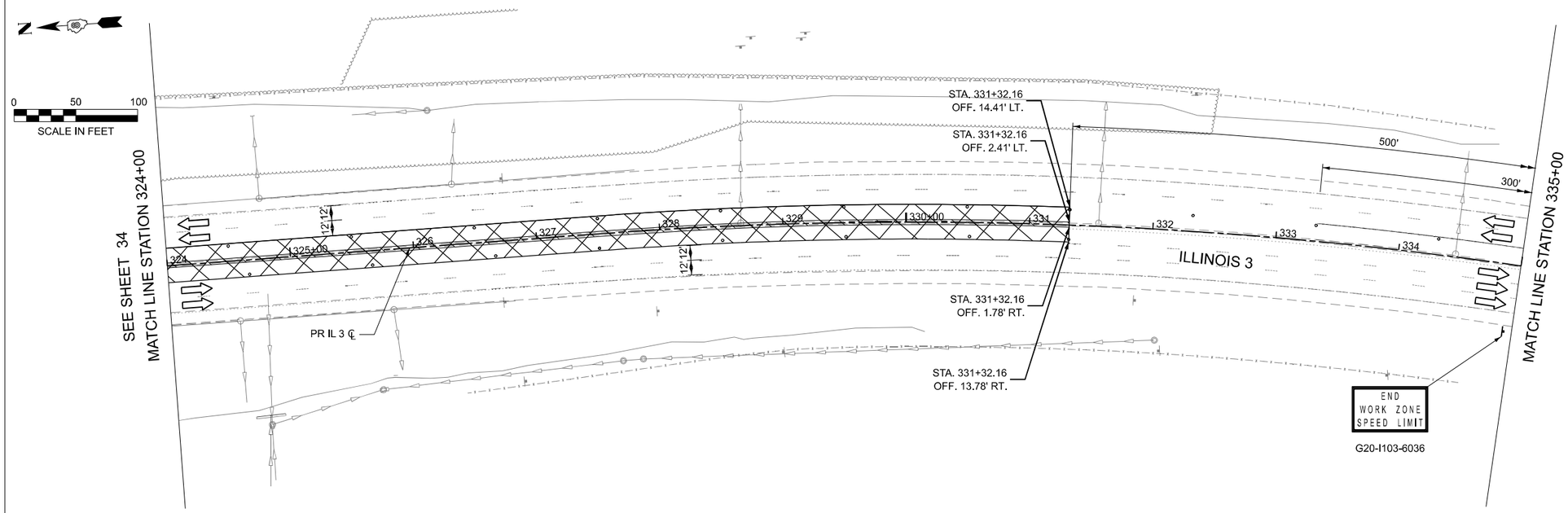

LEGEND

- DRUM WITH STEADY BURN MONODIRECTIONAL LIGHT
- TYPE II BARRICADE WITH STEADY BURN MONODIRECTIONAL LIGHT
- DIRECTION INDICATOR BARRICADE WITH STEADY BURN MONODIRECTIONAL LIGHT
- VERTICAL PANEL
- ARROW BOARD
- DIRECTION OF TRAFFIC
- TYPE III BARRICADE WITH FLASHING LIGHT (2- EA)
- TEMPORARY CONCRETE BARRIER
- IMPACT ATTENUATOR
- TEMPORARY PAVEMENT - PCC 9" DEPTH
- WORK AREA

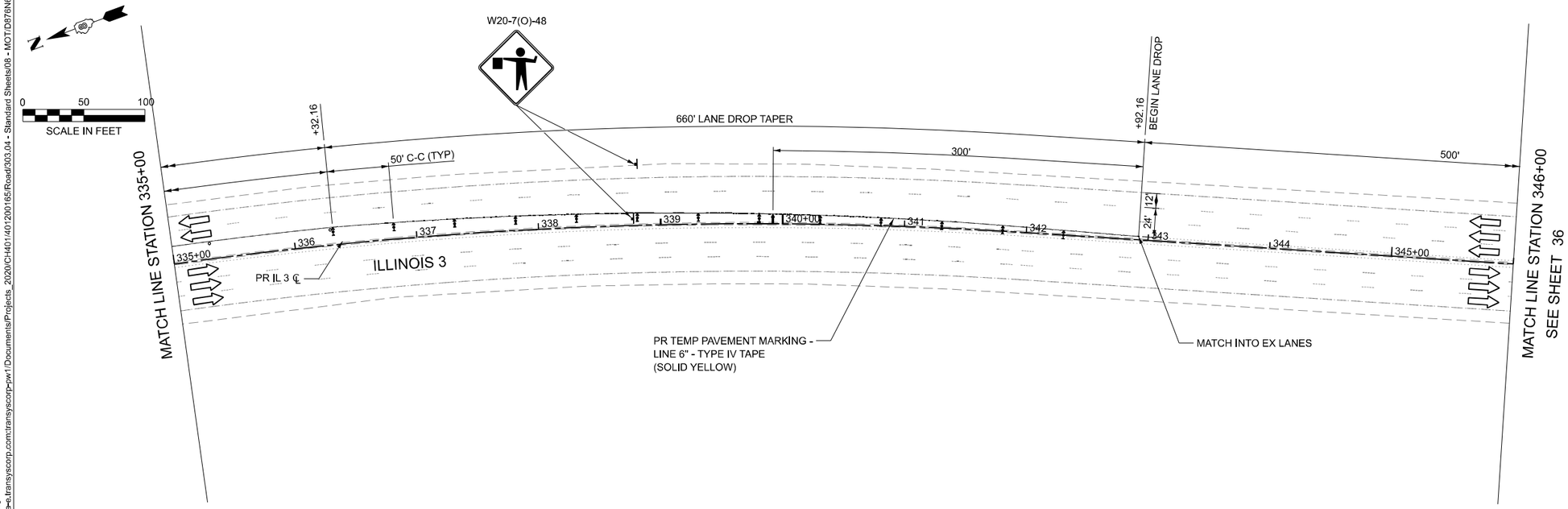

MODEL: IL3_MOT-1 - Plan 01-3
FILE NAME: pw://ho-pwin101.a-e.transyscorp.com:transyscorp-pw1/Documents/Projects_2020/CH401/40120016S/Road/303.04 - Standard Sheets/08 - MOT/D876N65-sh-staging1.dgn

TERRA ENGINEERING LTD.

USER NAME = mbmcwhorter	DESIGNED - TLH	REVISED -	
	DRAWN - TLH	REVISED -	
	CHECKED - NS	REVISED -	
PLOT DATE = 10/15/2025	DATE - 10/15/2025	REVISED -	

STATE OF ILLINOIS
DEPARTMENT OF TRANSPORTATION

ILLINOIS 3 OVER PORT DISTRICT RAILYARD
MAINTENANCE OF TRAFFIC PRE-STAGE 1A

SCALE: 1"=50' | SHEET 3 OF 4 SHEETS | STA. 324+00 TO STA. 346+00

F.A.P RTE.	SECTION	COUNTY	TOTAL SHEETS	SHEET NO.
0002	(103,104)BR-1	MADISON	178	35

CONTRACT NO. 76N65

ILLINOIS | FED. AID PROJECT

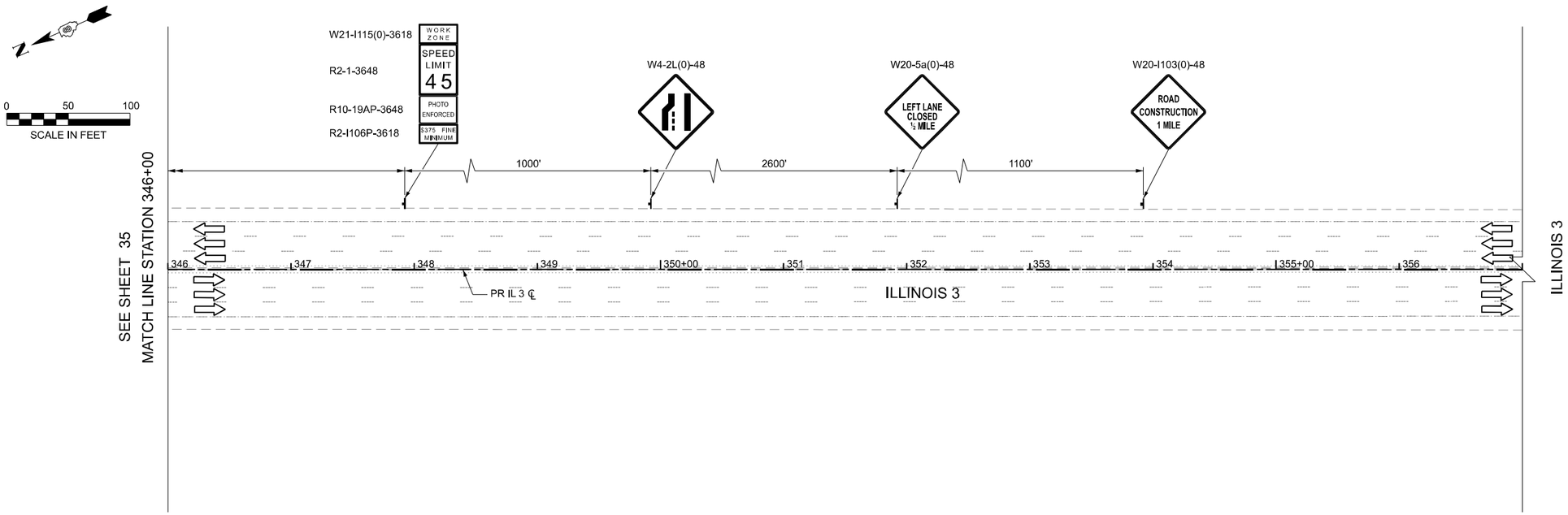

LEGEND

- DRUM WITH STEADY BURN MONODIRECTIONAL LIGHT
- TYPE II BARRICADE WITH STEADY BURN MONODIRECTIONAL LIGHT
- DIRECTION INDICATOR BARRICADE WITH STEADY BURN MONODIRECTIONAL LIGHT
- VERTICAL PANEL
- ARROW BOARD
- DIRECTION OF TRAFFIC
- TYPE III BARRICADE WITH FLASHING LIGHT (2- EA)
- TEMPORARY CONCRETE BARRIER
- IMPACT ATTENUATOR
- TEMPORARY PAVEMENT - PCC 9" DEPTH
- WORK AREA

MODEL: IL3_MOT-1 - Plan 01-4
FILE NAME: pw://ho-pwint01.a-e.transyscorp.com:transyscorp-pw1/Documents/Projects_2020/CH401/401200165/Road/303.04 - Standard Sheets/08 - MOT/D876N65-sht-staging1.dgn

TERRA ENGINEERING LTD.

USER NAME = mbmcwhorter	DESIGNED - TLH	REVISED -	
	DRAWN - TLH	REVISED -	
	CHECKED - NS	REVISED -	
PLOT DATE = 10/15/2025	DATE - 10/15/2025	REVISED -	

STATE OF ILLINOIS
DEPARTMENT OF TRANSPORTATION

ILLINOIS 3 OVER PORT DISTRICT RAILYARD
MAINTENANCE OF TRAFFIC PRE-STAGE 1A

SCALE: 1"=50' | SHEET 4 OF 4 SHEETS | STA. 346+00 TO STA. 357+00

F.A.P RTE.	SECTION	COUNTY	TOTAL SHEETS	SHEET NO.
0002	(103,104)BR-1	MADISON	178	36

CONTRACT NO. 76N65

ILLINOIS | FED. AID PROJECT

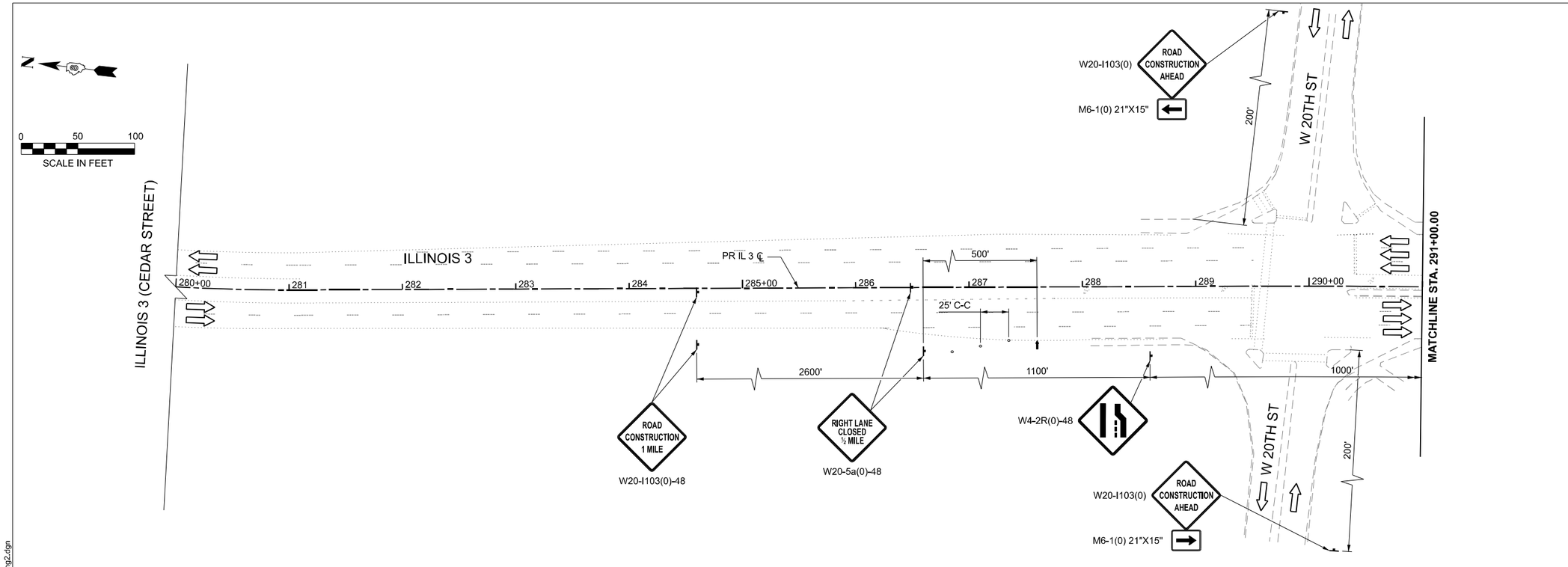

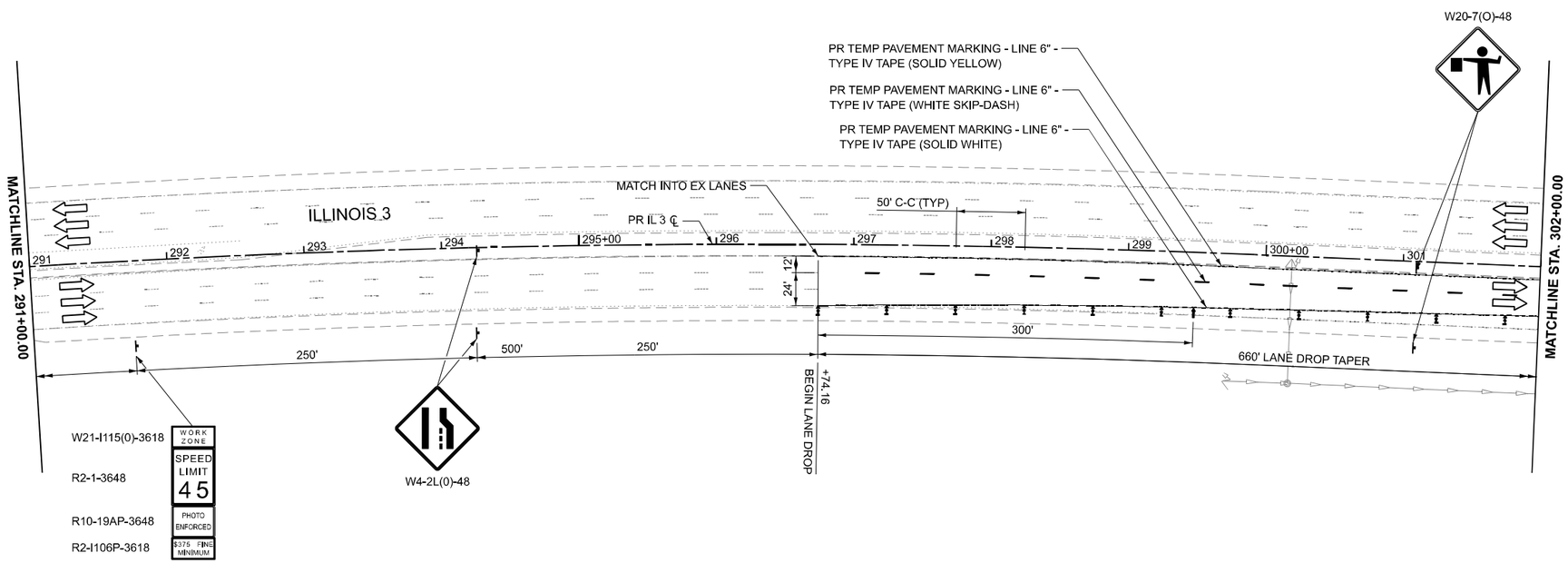

LEGEND

- DRUM WITH STEADY BURN MONODIRECTIONAL LIGHT
- TYPE II BARRICADE WITH STEADY BURN MONODIRECTIONAL LIGHT
- DIRECTION INDICATOR BARRICADE WITH STEADY BURN MONODIRECTIONAL LIGHT
- VERTICAL PANEL
- ARROW BOARD
- DIRECTION OF TRAFFIC
- TYPE III BARRICADE WITH FLASHING LIGHT (2- EA)
- TEMPORARY CONCRETE BARRIER
- IMPACT ATTENUATOR
- TEMPORARY PAVEMENT - PCC 9" DEPTH
- WORK AREA

NOTES

1. MAINTAIN NORTHBOUND SIGNAGE FROM PRE-STAGE 1A.
2. MAINTAIN EXISTING GUARDRAIL
3. PATCH INLET AREA AND EXISTING SHOULDER PATCH.

MODEL: IL3_MOT-1 - Plan 1-1
FILE NAME: pw://hq-pwin01.s-e.transyscorp.com:transyscorp-pw1/Documents/Projects_2020/CH401401200165/Road/303.04 - Standard Sheets/08 - MOT/D876N65-sht-staging2.dgn

TERRA ENGINEERING LTD.

USER NAME = mbmcwhorter	DESIGNED - TLH	REVISED -	
	DRAWN - TLH	REVISED -	
	CHECKED - NS	REVISED -	
PLOT DATE = 10/15/2025	DATE - 10/15/2025	REVISED -	

STATE OF ILLINOIS
DEPARTMENT OF TRANSPORTATION

ILLINOIS 3 OVER PORT DISTRICT RAILYARD
MAINTENANCE OF TRAFFIC PRE-STAGE 1B

SCALE: 1"=50' | SHEET 1 OF 4 SHEETS | STA. 280+00 TO STA. 302+00

F.A.P RTE.	SECTION	COUNTY	TOTAL SHEETS	SHEET NO.
0002	(103,104)BR-1	MADISON	178	37
		CONTRACT NO. 76N65		
		ILLINOIS	FED. AID PROJECT	

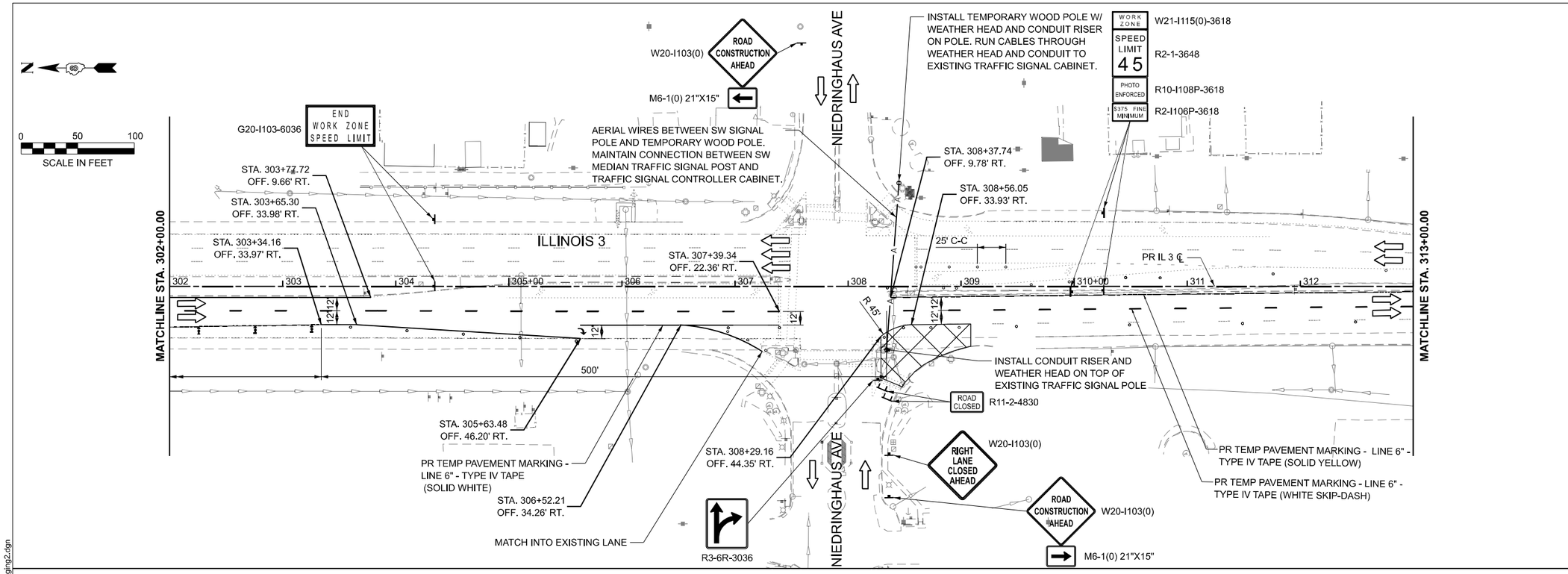

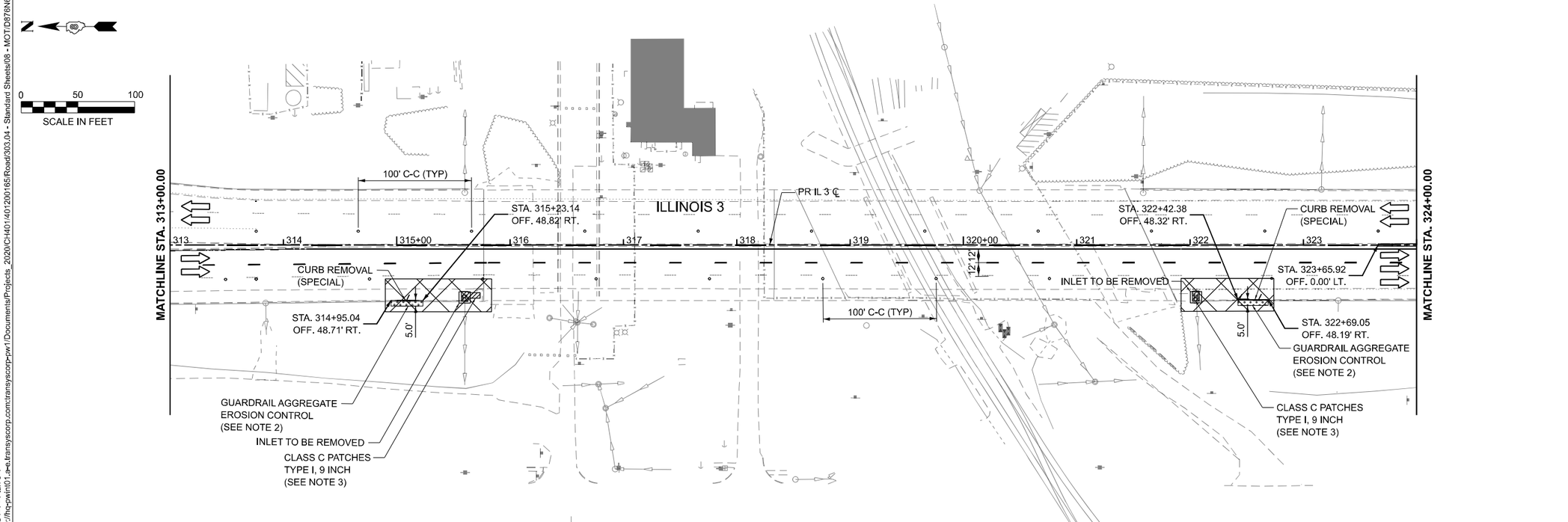

LEGEND

- DRUM WITH STEADY BURN MONODIRECTIONAL LIGHT
- TYPE II BARRICADE WITH STEADY BURN MONODIRECTIONAL LIGHT
- DIRECTION INDICATOR BARRICADE WITH STEADY BURN MONODIRECTIONAL LIGHT
- VERTICAL PANEL
- ARROW BOARD
- DIRECTION OF TRAFFIC
- TYPE III BARRICADE WITH FLASHING LIGHT (2- EA)
- TEMPORARY CONCRETE BARRIER
- IMPACT ATTENUATOR
- TEMPORARY PAVEMENT - PCC 9" DEPTH
- WORK AREA

NOTES

1. MAINTAIN NORTHBOUND SIGNAGE FROM PRE-STAGE 1A.
2. MAINTAIN EXISTING GUARDRAIL
3. PATCH INLET AREA AND EXISTING SHOULDER PATCH.

MODEL: IL3_MOT-1 - Plan 3-1
FILE NAME: pw://hq-pwin01.s-e.transyscorp.com:transyscorp-pw1/Documents/Projects_2020/CH401401200165/Road/303.04 - Standard Sheets/08 - MOT/D876N65-sht-staging2.dgn

TERRA ENGINEERING LTD.

USER NAME = mbmcwhorter	DESIGNED - TLH	REVISED -	
	DRAWN - TLH	REVISED -	
	CHECKED - NS	REVISED -	
PLOT DATE = 10/15/2025	DATE - 10/15/2025	REVISED -	

STATE OF ILLINOIS
DEPARTMENT OF TRANSPORTATION

ILLINOIS 3 OVER PORT DISTRICT RAILYARD
MAINTENANCE OF TRAFFIC PRE-STAGE 1B

SCALE: 1"=50' | SHEET 2 OF 4 SHEETS | STA. 302+00 TO STA. 324+00

F.A.P RTE.	SECTION	COUNTY	TOTAL SHEETS	SHEET NO.
0002	(103,104)BR-1	MADISON	178	38
		CONTRACT NO. 76N65		
		ILLINOIS	FED. AID PROJECT	

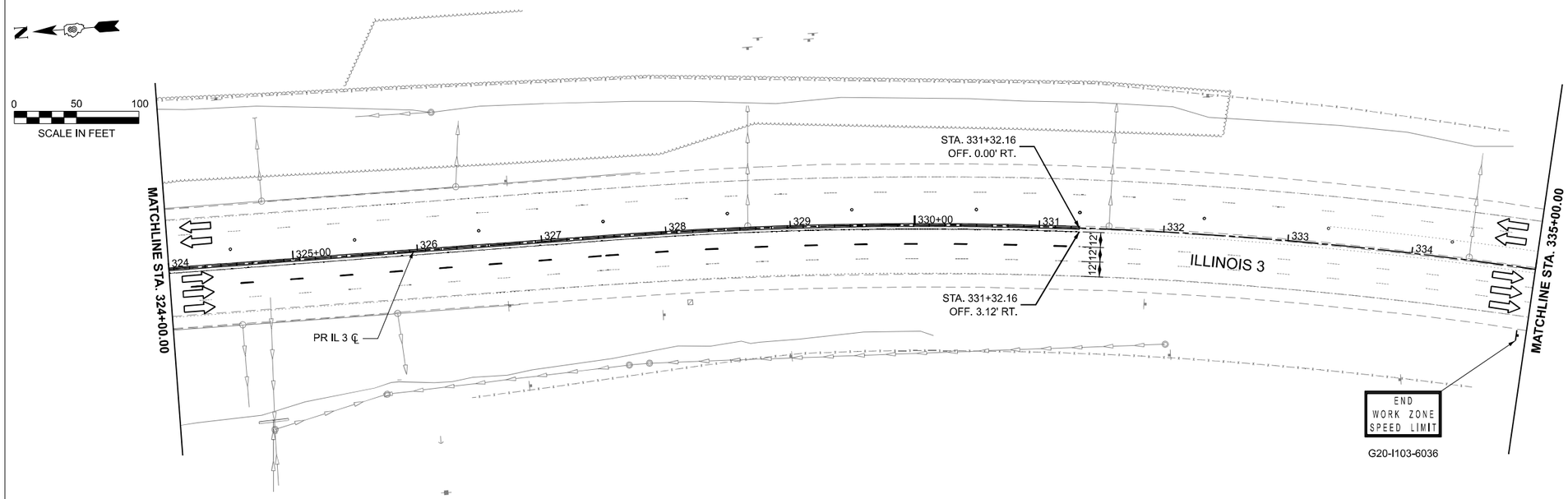

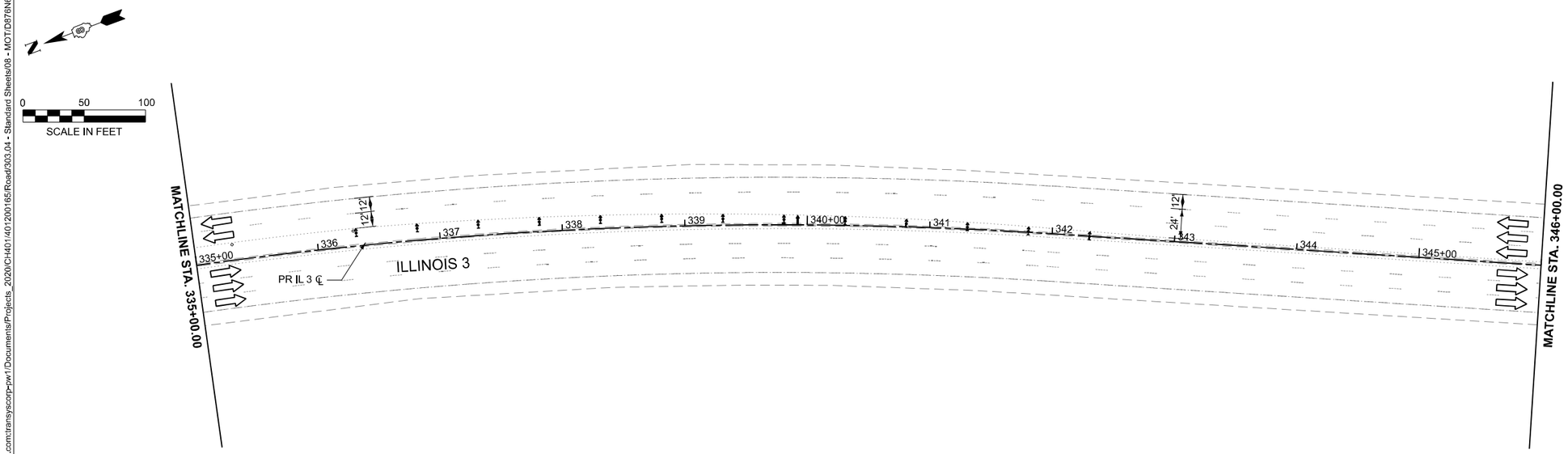

LEGEND

- DRUM WITH STEADY BURN MONODIRECTIONAL LIGHT
- TYPE II BARRICADE WITH STEADY BURN MONODIRECTIONAL LIGHT
- DIRECTION INDICATOR BARRICADE WITH STEADY BURN MONODIRECTIONAL LIGHT
- VERTICAL PANEL
- ARROW BOARD
- DIRECTION OF TRAFFIC
- TYPE III BARRICADE WITH FLASHING LIGHT (2- EA)
- TEMPORARY CONCRETE BARRIER
- IMPACT ATTENUATOR
- TEMPORARY PAVEMENT - PCC 9" DEPTH
- WORK AREA

NOTES

1. MAINTAIN NORTHBOUND SIGNAGE FROM PRE-STAGE 1A.
2. MAINTAIN EXISTING GUARDRAIL
3. PATCH INLET AREA AND EXISTING SHOULDER PATCH.

MODEL: IL3_MOT-1 - Plan 5-1
FILE NAME: pw://hq-pwin01.s-e.transyscorp.com:transyscorp-pw1/Documents/Projects_2020/CH401401200165/Road/303.04 - Standard Sheets/08 - MOT/D876N65-sht-staging2.dgn

TERRA ENGINEERING LTD.

USER NAME = mbmcwhorter	DESIGNED - TLH	REVISED -	
	DRAWN - TLH	REVISED -	
	CHECKED - NS	REVISED -	
PLOT DATE = 10/15/2025	DATE - 10/15/2025	REVISED -	

STATE OF ILLINOIS
DEPARTMENT OF TRANSPORTATION

ILLINOIS 3 OVER PORT DISTRICT RAILYARD
MAINTENANCE OF TRAFFIC PRE-STAGE 1B

SCALE: 1"=50' | SHEET 3 OF 4 SHEETS | STA. 324+00 TO STA. 346+00

F.A.P RTE.	SECTION	COUNTY	TOTAL SHEETS	SHEET NO.
0002	(103,104)BR-1	MADISON	178	39
		CONTRACT NO. 76N65		
		ILLINOIS	FED. AID PROJECT	

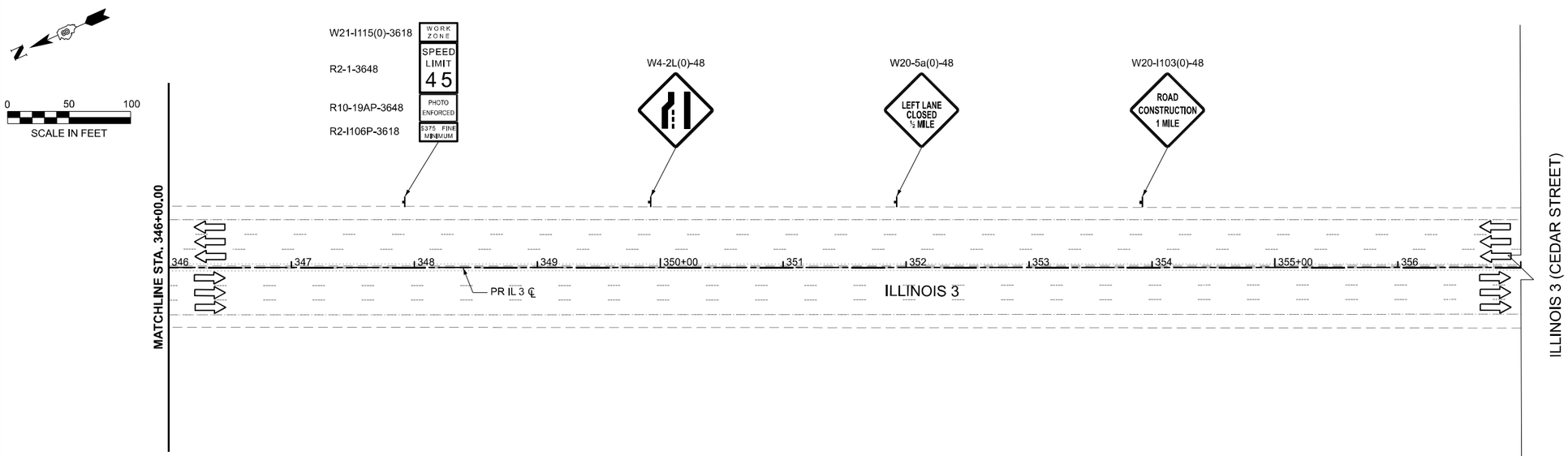

LEGEND

- DRUM WITH STEADY BURN MONODIRECTIONAL LIGHT
- TYPE II BARRICADE WITH STEADY BURN MONODIRECTIONAL LIGHT
- DIRECTION INDICATOR BARRICADE WITH STEADY BURN MONODIRECTIONAL LIGHT
- VERTICAL PANEL
- ARROW BOARD
- DIRECTION OF TRAFFIC
- TYPE III BARRICADE WITH FLASHING LIGHT (2- EA)
- TEMPORARY CONCRETE BARRIER
- IMPACT ATTENUATOR
- TEMPORARY PAVEMENT - PCC 9" DEPTH
- WORK AREA

NOTES

1. MAINTAIN NORTHBOUND SIGNAGE FROM PRE-STAGE 1A.
2. MAINTAIN EXISTING GUARDRAIL
3. PATCH INLET AREA AND EXISTING SHOULDER PATCH.

MODEL: IL3_MOT-1 - Plan 7-1
FILE NAME: pw://hq-pwin01.s-e.transyscorp.com:transyscorp-pw1/Documents/Projects_2020/CH401401200165/Road/303.04 - Standard Sheets/08 - MOT/D876N65-sht-staging2.dgn

TERRA ENGINEERING LTD.

USER NAME = mbmcwhorter	DESIGNED - TLH	REVISED -	
	DRAWN - TLH	REVISED -	
	CHECKED - NS	REVISED -	
PLOT DATE = 10/15/2025	DATE - 10/15/2025	REVISED -	

STATE OF ILLINOIS
DEPARTMENT OF TRANSPORTATION

ILLINOIS 3 OVER PORT DISTRICT RAILYARD
MAINTENANCE OF TRAFFIC PRE-STAGE 1B

SCALE: 1"=50' | SHEET 4 OF 4 SHEETS | STA. 346+00 TO STA. 357+00

F.A.P RTE.	SECTION	COUNTY	TOTAL SHEETS	SHEET NO.
0002	(103,104)BR-1	MADISON	178	40

CONTRACT NO. 76N65

ILLINOIS | FED. AID PROJECT

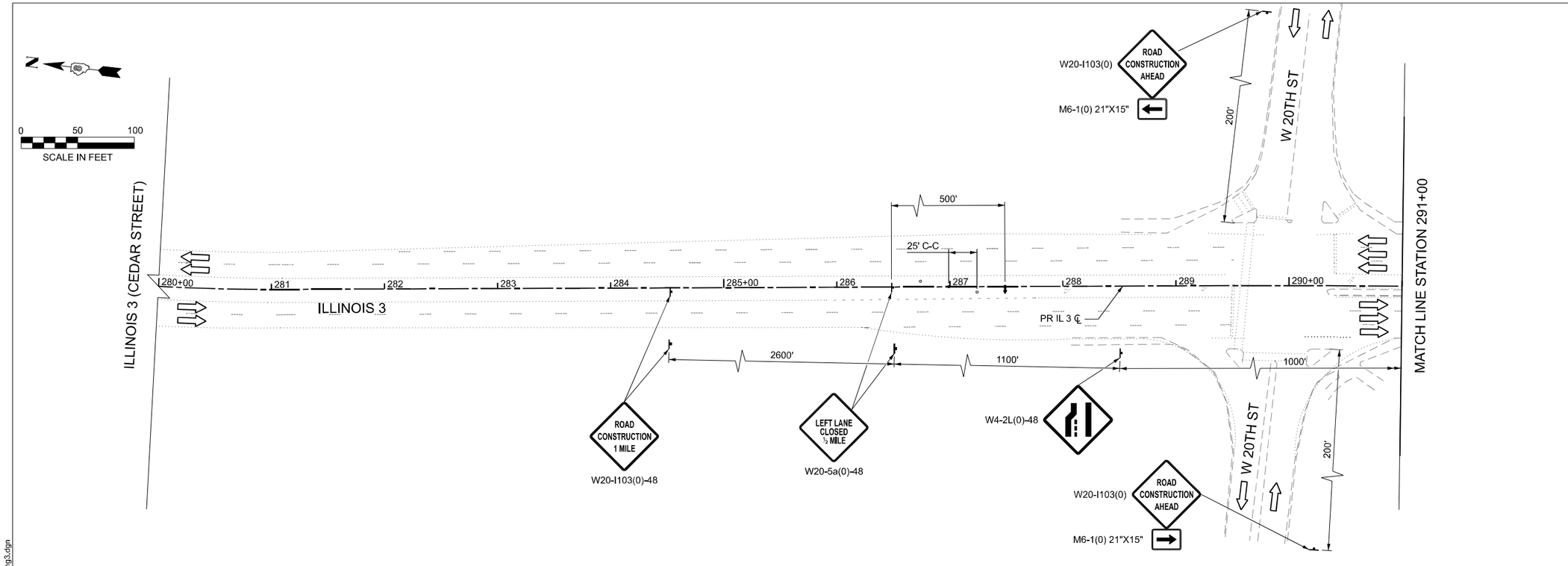

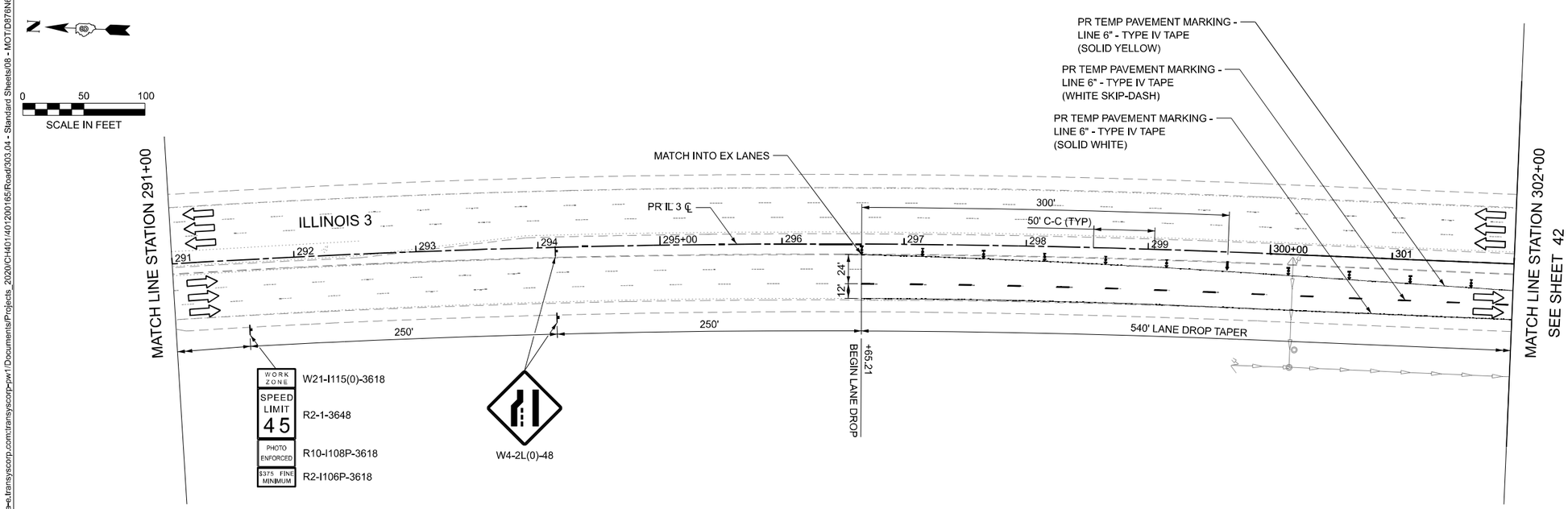

LEGEND

- DRUM WITH STEADY BURN MONODIRECTIONAL LIGHT
- TYPE II BARRICADE WITH STEADY BURN MONODIRECTIONAL LIGHT
- DIRECTION INDICATOR BARRICADE WITH STEADY BURN MONODIRECTIONAL LIGHT
- VERTICAL PANEL
- ARROW BOARD
- DIRECTION OF TRAFFIC
- TYPE III BARRICADE WITH FLASHING LIGHT (2- EA)
- TEMPORARY CONCRETE BARRIER
- IMPACT ATTENUATOR
- TEMPORARY PAVEMENT - PCC 9" DEPTH
- WORK AREA

NOTES

1. TEMPORARY CONCRETE BARRIER PARALLEL WITH TRAFFIC SHALL INCLUDE TEMPORARY PAVEMENT MARKING - LINE 6" - PAINT FOR PAINTING THE BOTTOM 6" OF THE BARRIER PER DISTRICT 8 GENERAL NOTE 16.

MODEL: IL3_MOT - Plan 9
FILE NAME: pw://hq-pwin01.a-e.transyscorp.com:transyscorp-pw1/Documents/Projects_2020/CH401401200165/Road/303.04 - Standard Sheets/08 - MOT/D876N65-sht-staging3.dgn

TERRA ENGINEERING LTD.

USER NAME = mbmcwhorter	DESIGNED - TLH	REVISED -	
	DRAWN - TLH	REVISED -	
	CHECKED - NS	REVISED -	
PLOT DATE = 10/15/2025	DATE - 10/15/2025	REVISED -	

STATE OF ILLINOIS
DEPARTMENT OF TRANSPORTATION

ILLINOIS 3 OVER PORT DISTRICT RAILYARD
MAINTENANCE OF TRAFFIC PLAN - STAGE 1

SCALE: 1"=50' | SHEET 1 OF 6 SHEETS | STA. 280+00 TO STA. 302+00

F.A.P RTE.	SECTION	COUNTY	TOTAL SHEETS	SHEET NO.
0002	(103,104)BR-1	MADISON	178	41
		CONTRACT NO. 76N65		
		ILLINOIS	FED. AID PROJECT	

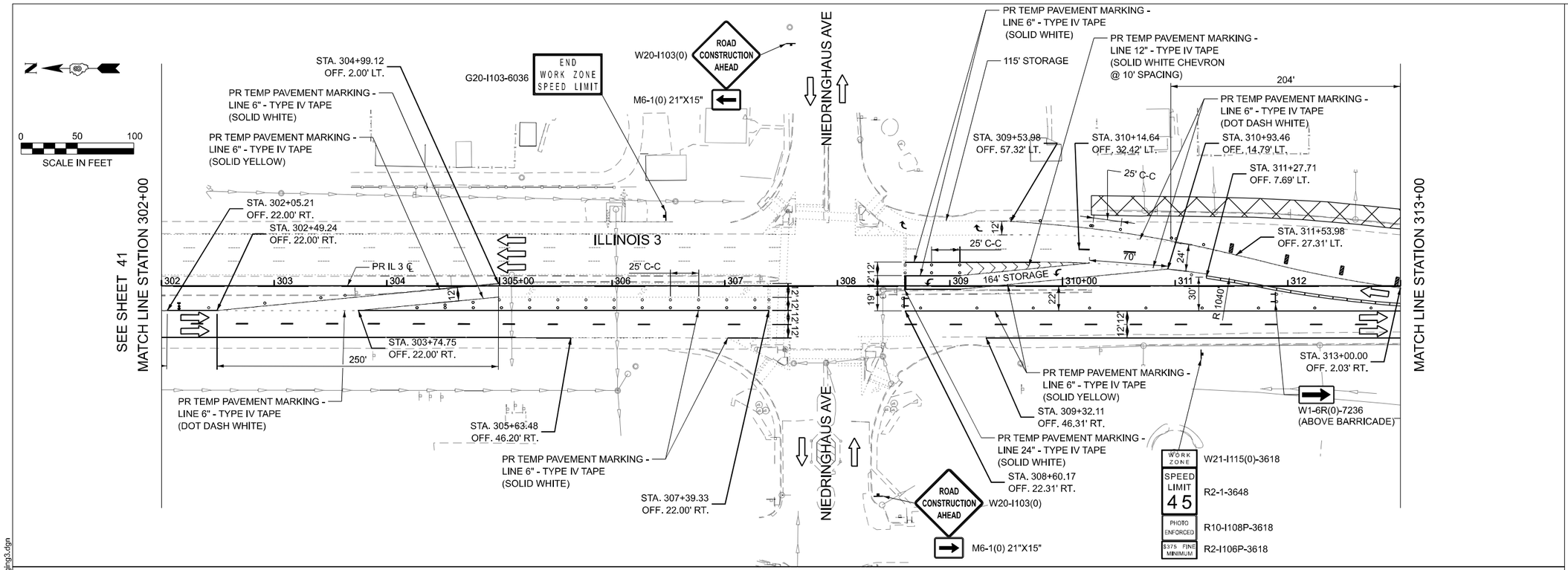

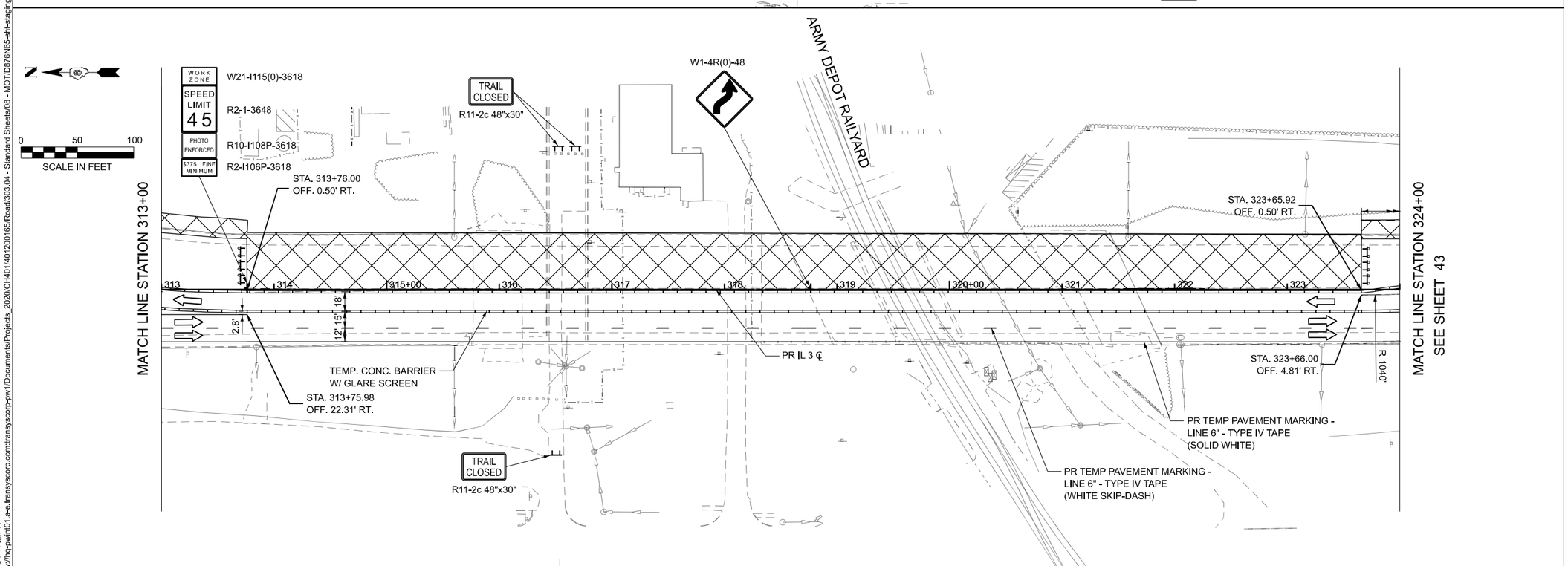

LEGEND

- DRUM WITH STEADY BURN MONODIRECTIONAL LIGHT
- TYPE II BARRICADE WITH STEADY BURN MONODIRECTIONAL LIGHT
- DIRECTION INDICATOR BARRICADE WITH STEADY BURN MONODIRECTIONAL LIGHT
- VERTICAL PANEL
- ARROW BOARD
- DIRECTION OF TRAFFIC
- TYPE III BARRICADE WITH FLASHING LIGHT (2- EA)
- TEMPORARY CONCRETE BARRIER
- IMPACT ATTENUATOR
- TEMPORARY PAVEMENT - PCC 9" DEPTH
- WORK AREA

NOTES

1. TEMPORARY CONCRETE BARRIER PARALLEL WITH TRAFFIC SHALL INCLUDE TEMPORARY PAVEMENT MARKING - LINE 6" - PAINT FOR PAINTING THE BOTTOM 6" OF THE BARRIER PER DISTRICT 8 GENERAL NOTE 16.

MODEL: IL3_MOT - Plan 11
FILE NAME: pw://hq-pwin101.a-e.transyscorp.com:transyscorp-pw1/Documents/Projects_2020/CH401/401200165/Road/303.04 - Standard Sheets/08 - MOT/D876N65-sht-staging3.dgn

TERRA ENGINEERING LTD.

USER NAME = mbmcwhorter	DESIGNED - TLH	REVISED -	
	DRAWN - TLH	REVISED -	
	CHECKED - NS	REVISED -	
PLOT DATE = 10/15/2025	DATE - 10/15/2025	REVISED -	

STATE OF ILLINOIS
DEPARTMENT OF TRANSPORTATION

ILLINOIS 3 OVER PORT DISTRICT RAILYARD
MAINTENANCE OF TRAFFIC PLAN - STAGE 1

SCALE: 1"=50' | SHEET 2 OF 6 SHEETS | STA. 302+00 TO STA. 324+00

F.A.P RTE.	SECTION	COUNTY	TOTAL SHEETS	SHEET NO.
0002	(103,104)BR-1	MADISON	178	42

CONTRACT NO. 76N65

ILLINOIS | FED. AID PROJECT

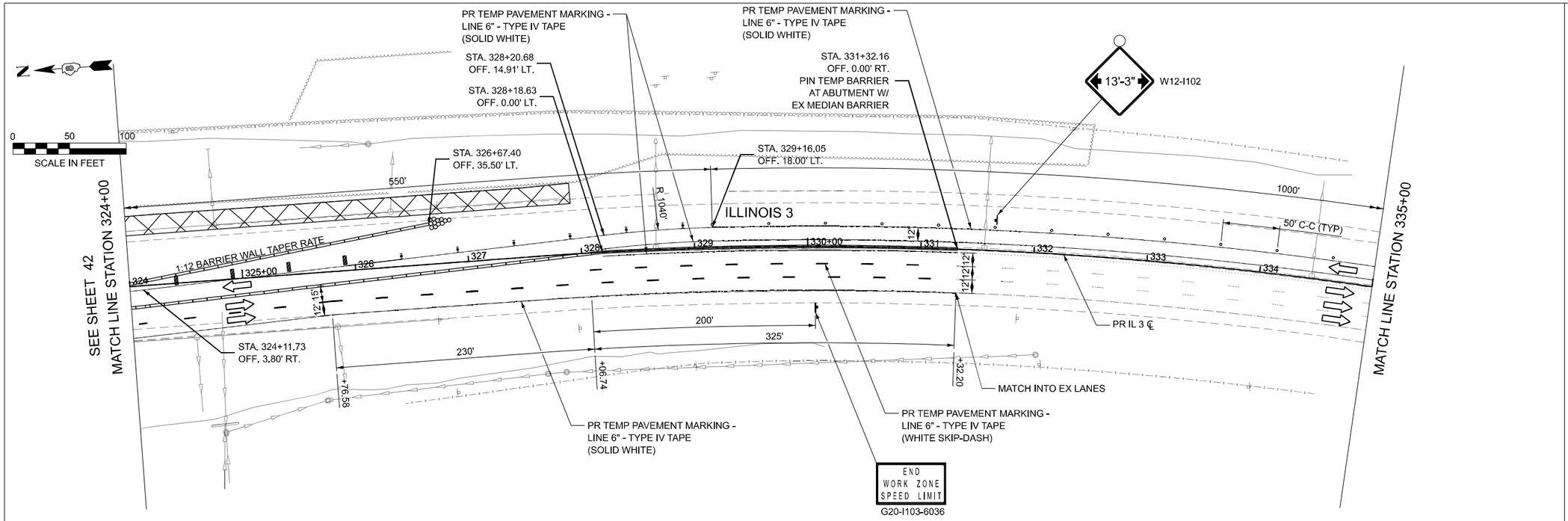

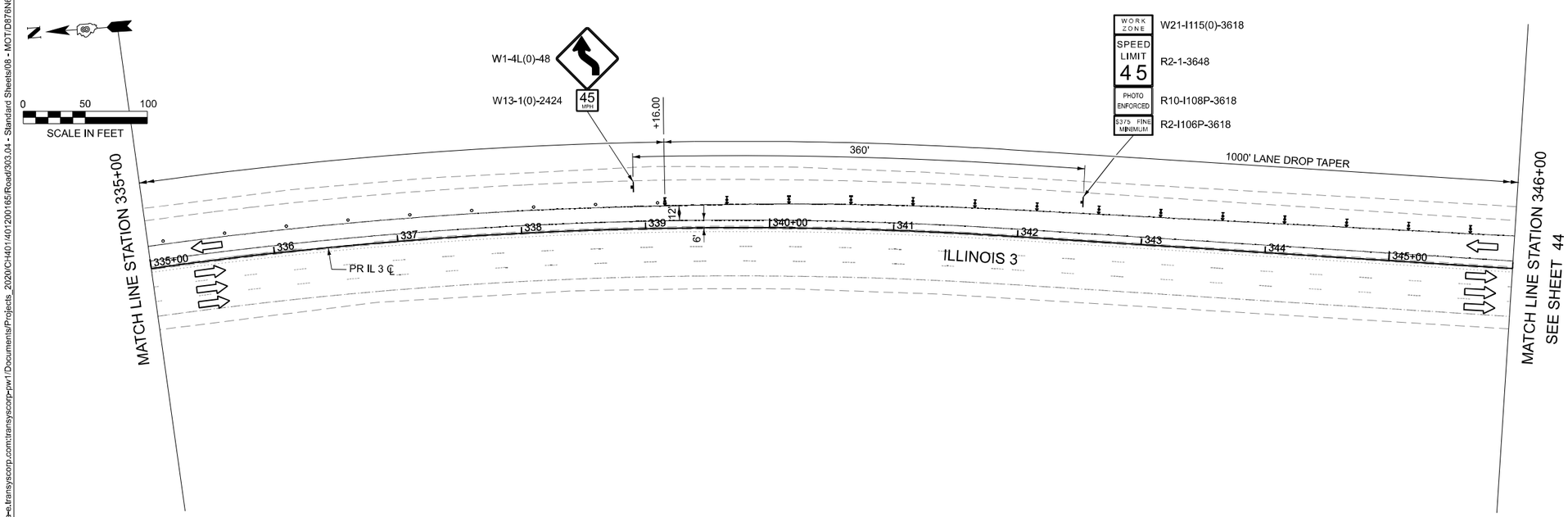

LEGEND

- DRUM WITH STEADY BURN MONODIRECTIONAL LIGHT
- TYPE II BARRICADE WITH STEADY BURN MONODIRECTIONAL LIGHT
- DIRECTION INDICATOR BARRICADE WITH STEADY BURN MONODIRECTIONAL LIGHT
- VERTICAL PANEL
- ARROW BOARD
- DIRECTION OF TRAFFIC
- TYPE III BARRICADE WITH FLASHING LIGHT (2- EA)
- TEMPORARY CONCRETE BARRIER
- IMPACT ATTENUATOR
- TEMPORARY PAVEMENT - PCC 9" DEPTH
- WORK AREA

NOTES

1. TEMPORARY CONCRETE BARRIER PARALLEL WITH TRAFFIC SHALL INCLUDE TEMPORARY PAVEMENT MARKING - LINE 6" - PAINT FOR PAINTING THE BOTTOM 6" OF THE BARRIER PER DISTRICT 8 GENERAL NOTE 16.

MODEL: IL3_MOT - Plan 13
FILE NAME: pw://hq-pwin01.a-e.transyscorp.com:transyscorp-pw1/Documents/Projects_2020/CH401401200165/Road/303.04 - Standard Sheets/08 - MOT/D876N65-sht-staging3.dgn

TERRA ENGINEERING LTD.

USER NAME = mbmcwhorter	DESIGNED - TLH	REVISED -	
	DRAWN - TLH	REVISED -	
	CHECKED - NS	REVISED -	
PLOT DATE = 10/15/2025	DATE - 10/15/2025	REVISED -	

STATE OF ILLINOIS
DEPARTMENT OF TRANSPORTATION

ILLINOIS 3 OVER PORT DISTRICT RAILYARD
MAINTENANCE OF TRAFFIC PLAN - STAGE 1

SCALE: 1"=50' | SHEET 3 OF 6 SHEETS | STA. 324+00 TO STA. 346+00

F.A.P RTE.	SECTION	COUNTY	TOTAL SHEETS	SHEET NO.
0002	(103,104)BR-1	MADISON	178	43
		CONTRACT NO. 76N65		
		ILLINOIS	FED. AID PROJECT	

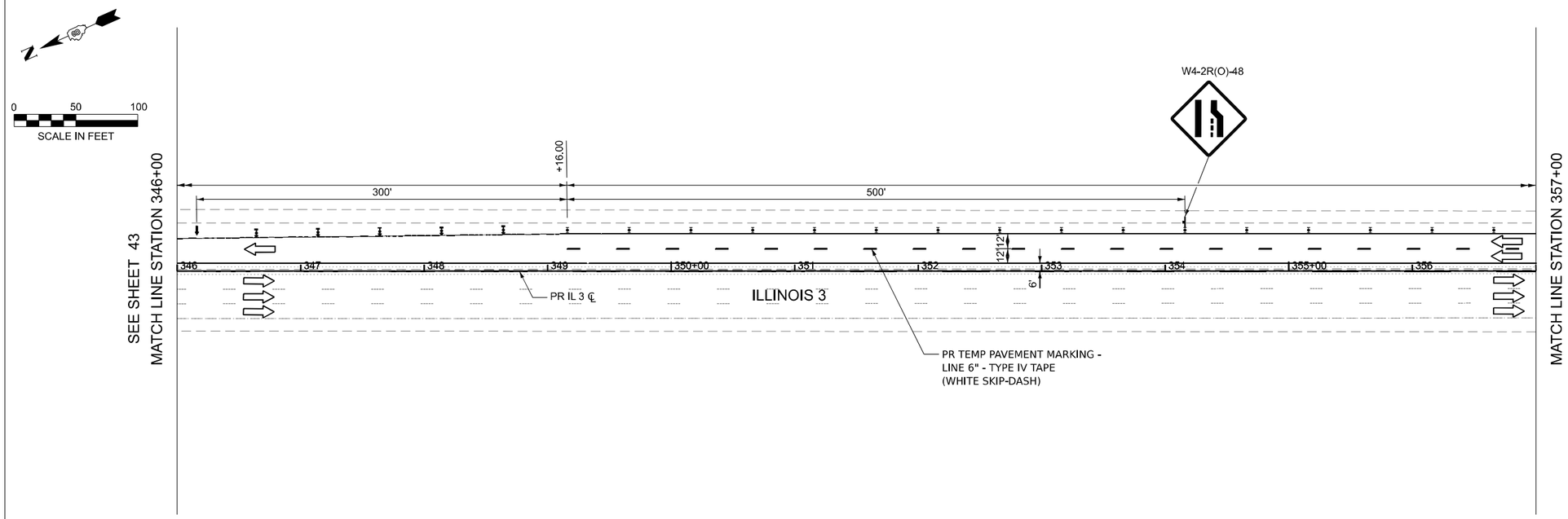

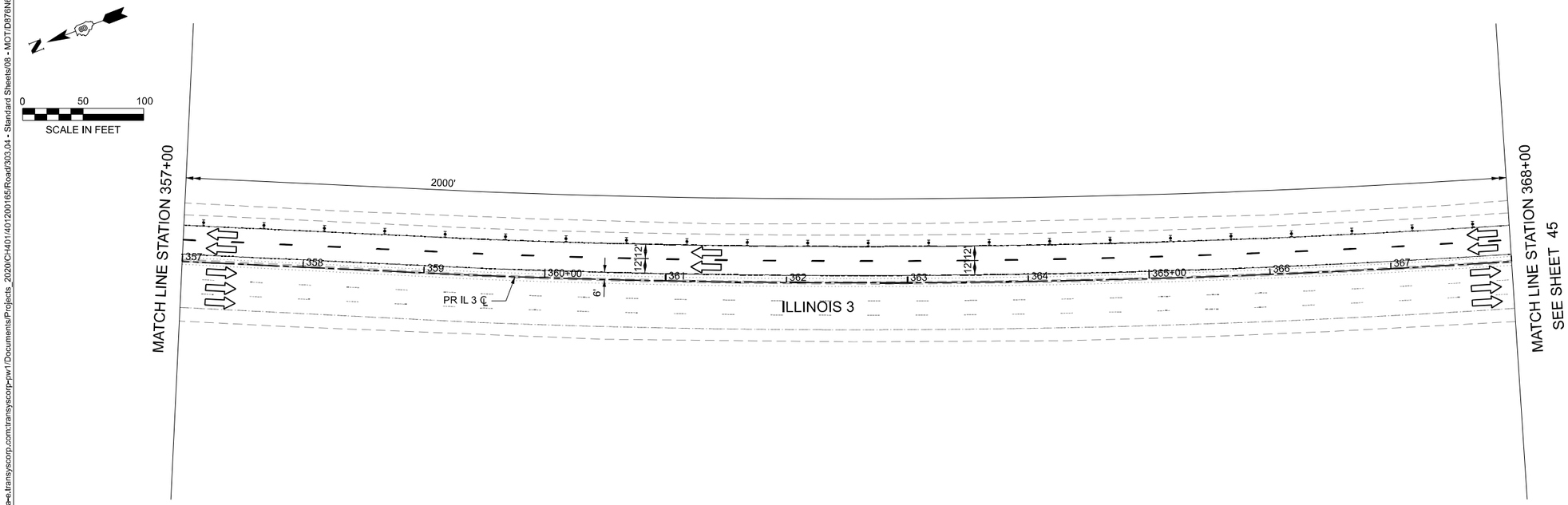

LEGEND

- DRUM WITH STEADY BURN MONODIRECTIONAL LIGHT
- TYPE II BARRICADE WITH STEADY BURN MONODIRECTIONAL LIGHT
- DIRECTION INDICATOR BARRICADE WITH STEADY BURN MONODIRECTIONAL LIGHT
- VERTICAL PANEL
- ARROW BOARD
- DIRECTION OF TRAFFIC
- TYPE III BARRICADE WITH FLASHING LIGHT (2- EA)
- TEMPORARY CONCRETE BARRIER
- IMPACT ATTENUATOR
- TEMPORARY PAVEMENT - PCC 9" DEPTH
- WORK AREA

NOTES

1. TEMPORARY CONCRETE BARRIER PARALLEL WITH TRAFFIC SHALL INCLUDE TEMPORARY PAVEMENT MARKING - LINE 6" - PAINT FOR PAINTING THE BOTTOM 6" OF THE BARRIER PER DISTRICT 8 GENERAL NOTE 16.

MODEL: IL3_MOT - Plan 15
FILE NAME: pw://hq-pwin01.a-e.transyscorp.com:transyscorp-pw1/Documents/Projects_2020/CH401401200165/Road/303.04 - Standard Sheets/08 - MOT/D876N65-sht-staging3.dgn

TERRA ENGINEERING LTD.

USER NAME = mbmcwhorter	DESIGNED - TLH	REVISED -	
	DRAWN - TLH	REVISED -	
	CHECKED - NS	REVISED -	
PLOT DATE = 10/15/2025	DATE - 10/15/2025	REVISED -	

STATE OF ILLINOIS
DEPARTMENT OF TRANSPORTATION

ILLINOIS 3 OVER PORT DISTRICT RAILYARD
MAINTENANCE OF TRAFFIC PLAN - STAGE 1

SCALE: 1"=50' | SHEET 4 OF 6 SHEETS | STA. 346+00 TO STA. 368+00

F.A.P RTE.	SECTION	COUNTY	TOTAL SHEETS	SHEET NO.
0002	(103,104)BR-1	MADISON	178	44
		CONTRACT NO. 76N65		
		ILLINOIS	FED. AID PROJECT	

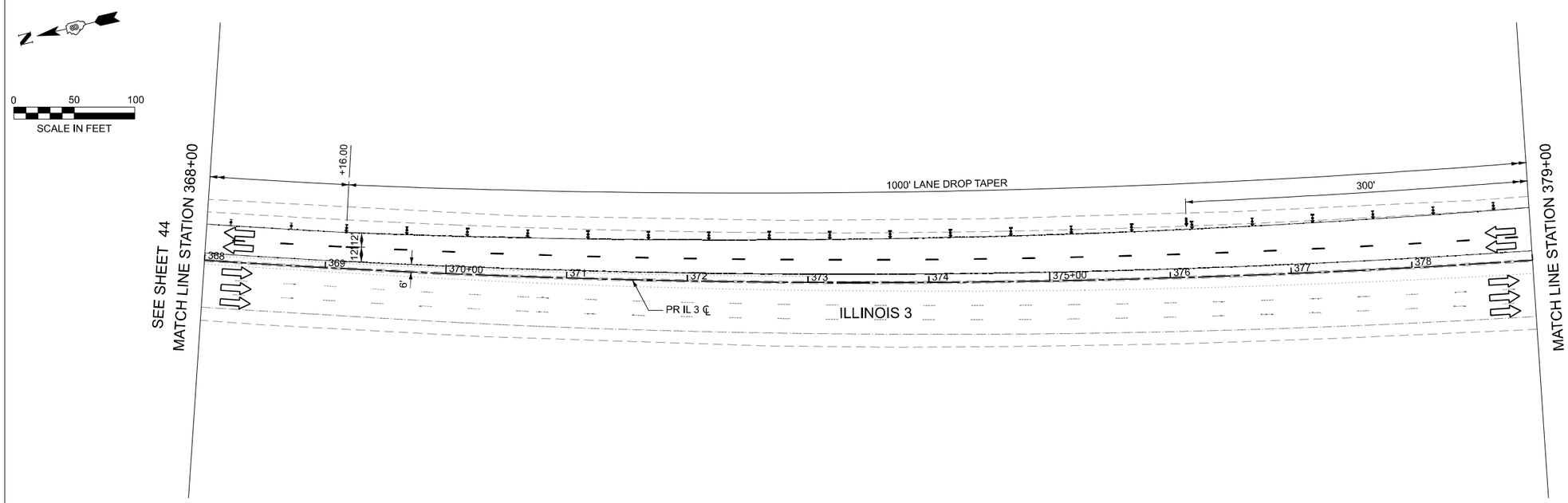

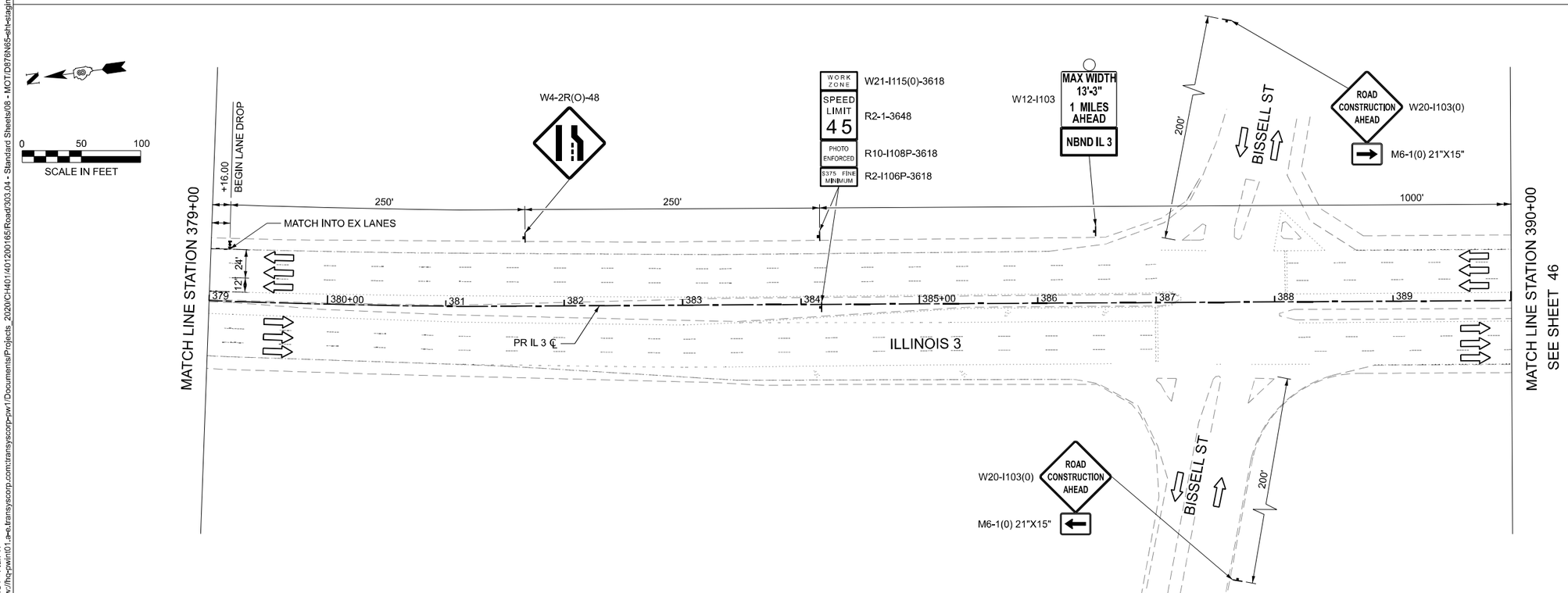

LEGEND

- DRUM WITH STEADY BURN MONODIRECTIONAL LIGHT
- TYPE II BARRICADE WITH STEADY BURN MONODIRECTIONAL LIGHT
- DIRECTION INDICATOR BARRICADE WITH STEADY BURN MONODIRECTIONAL LIGHT
- VERTICAL PANEL
- ARROW BOARD
- DIRECTION OF TRAFFIC
- TYPE III BARRICADE WITH FLASHING LIGHT (2- EA)
- TEMPORARY CONCRETE BARRIER
- IMPACT ATTENUATOR
- TEMPORARY PAVEMENT - PCC 9" DEPTH
- WORK AREA

NOTES

1. TEMPORARY CONCRETE BARRIER PARALLEL WITH TRAFFIC SHALL INCLUDE TEMPORARY PAVEMENT MARKING - LINE 6" - PAINT FOR PAINTING THE BOTTOM 6" OF THE BARRIER PER DISTRICT 8 GENERAL NOTE 16.

MODEL: IL3_MOT - Plan 17
FILE NAME: pw://hq-pwim01.s-e.transyscorp.com:transyscorp-pw1/Documents/Projects_2020/CH401401200165/Road/303.04 - Standard Sheets/08 - MOT/D876N65-sht-staging3.dgn

TERRA ENGINEERING LTD.

USER NAME = mbmcwhorter	DESIGNED - TLH	REVISED -	
	DRAWN - TLH	REVISED -	
	CHECKED - NS	REVISED -	
PLOT DATE = 10/15/2025	DATE - 10/15/2025	REVISED -	

STATE OF ILLINOIS
DEPARTMENT OF TRANSPORTATION

ILLINOIS 3 OVER PORT DISTRICT RAILYARD
MAINTENANCE OF TRAFFIC PLAN - STAGE 1

SCALE: 1"=50' | SHEET 5 OF 6 SHEETS | STA. 368+00 TO STA. 390+00

F.A.P RTE.	SECTION	COUNTY	TOTAL SHEETS	SHEET NO.
0002	(103,104)BR-1	MADISON	178	45
		CONTRACT NO. 76N65		
		ILLINOIS	FED. AID PROJECT	

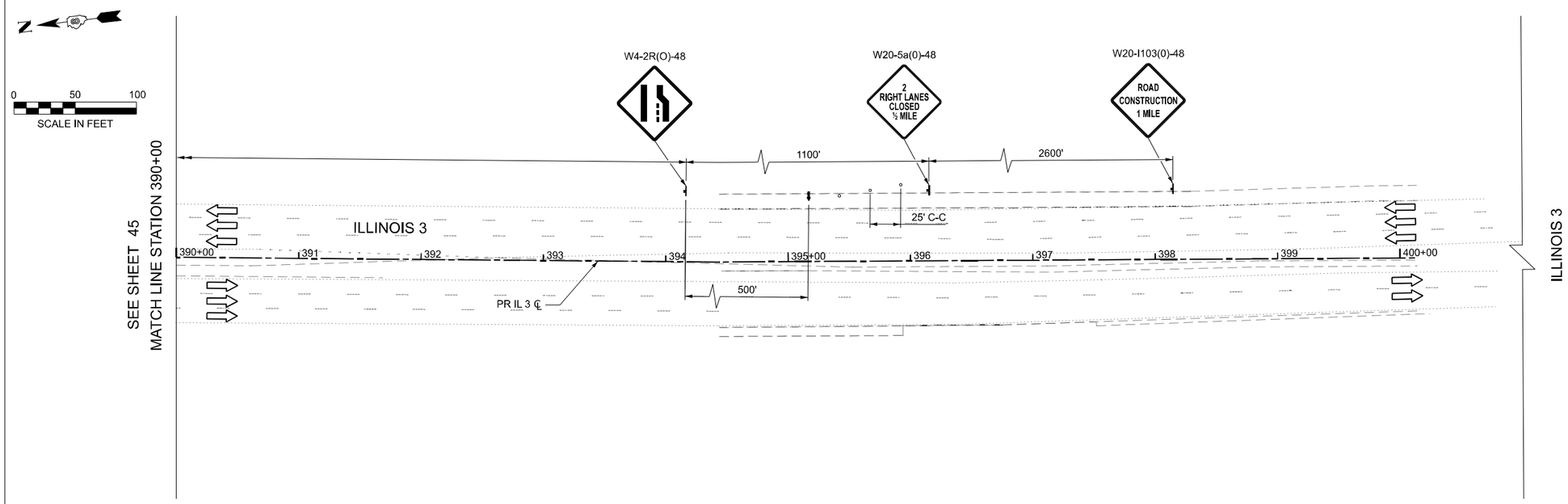

LEGEND

- DRUM WITH STEADY BURN MONODIRECTIONAL LIGHT
- TYPE II BARRICADE WITH STEADY BURN MONODIRECTIONAL LIGHT
- DIRECTION INDICATOR BARRICADE WITH STEADY BURN MONODIRECTIONAL LIGHT
- VERTICAL PANEL
- ARROW BOARD
- DIRECTION OF TRAFFIC
- TYPE III BARRICADE WITH FLASHING LIGHT (2- EA)
- TEMPORARY CONCRETE BARRIER
- IMPACT ATTENUATOR
- TEMPORARY PAVEMENT - PCC 9" DEPTH
- WORK AREA

NOTES

1. TEMPORARY CONCRETE BARRIER PARALLEL WITH TRAFFIC SHALL INCLUDE TEMPORARY PAVEMENT MARKING - LINE 6" - PAINT FOR PAINTING THE BOTTOM 6" OF THE BARRIER PER DISTRICT 8 GENERAL NOTE 16.

MODEL: IL3_MOT - Plan 19
FILE NAME: pw://hq-pwin01.s-e.transyscorp.com:transyscorp-pw1/Documents/Projects_2020/CH401401200165/Road/303.04 - Standard Sheets/08 - MOT/D876N65-sht-staging3.dgn

TERRA ENGINEERING LTD.

USER NAME = mbmcwhorter	DESIGNED - TLH	REVISED -	
	DRAWN - TLH	REVISED -	
	CHECKED - NS	REVISED -	
PLOT DATE = 10/15/2025	DATE - 10/15/2025	REVISED -	

STATE OF ILLINOIS
DEPARTMENT OF TRANSPORTATION

ILLINOIS 3 OVER PORT DISTRICT RAILYARD
MAINTENANCE OF TRAFFIC PLAN - STAGE 1

SCALE: 1"=50' | SHEET 6 OF 6 SHEETS | STA. 390+00 TO STA. n/a

F.A.P RTE.	SECTION	COUNTY	TOTAL SHEETS	SHEET NO.
0002	(103,104)BR-1	MADISON	178	46
		CONTRACT NO. 76N65		
		ILLINOIS	FED. AID PROJECT	

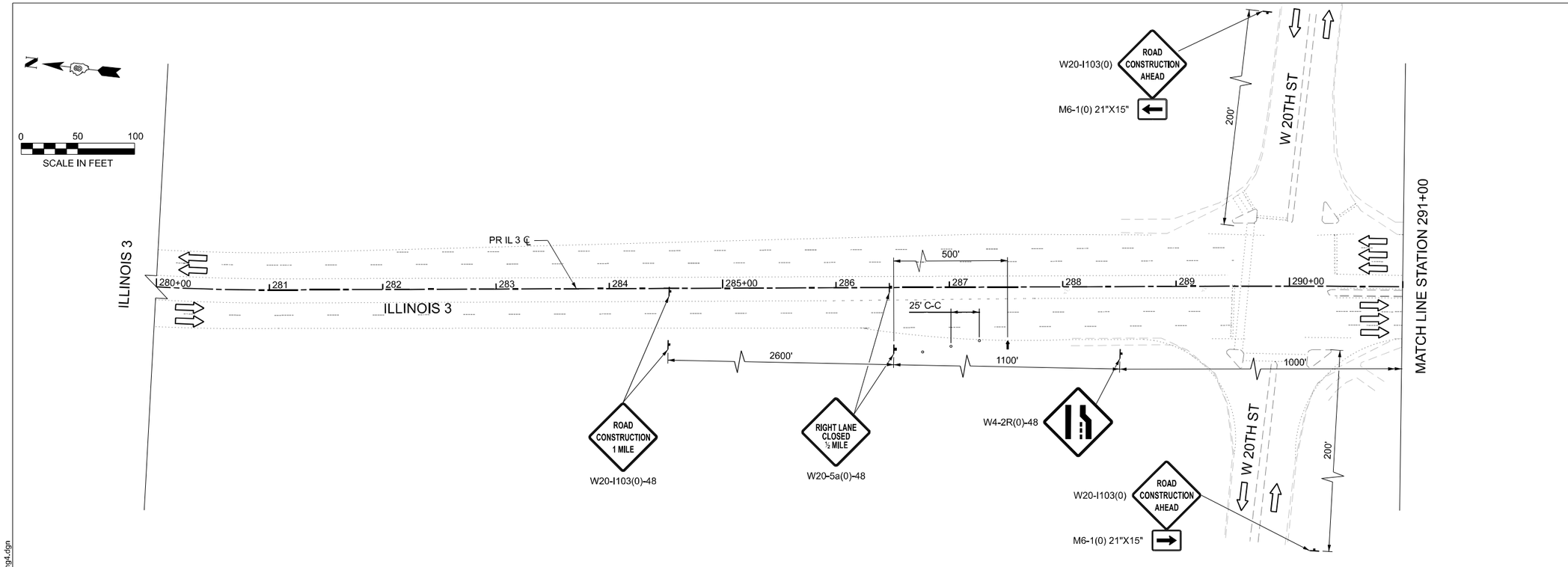

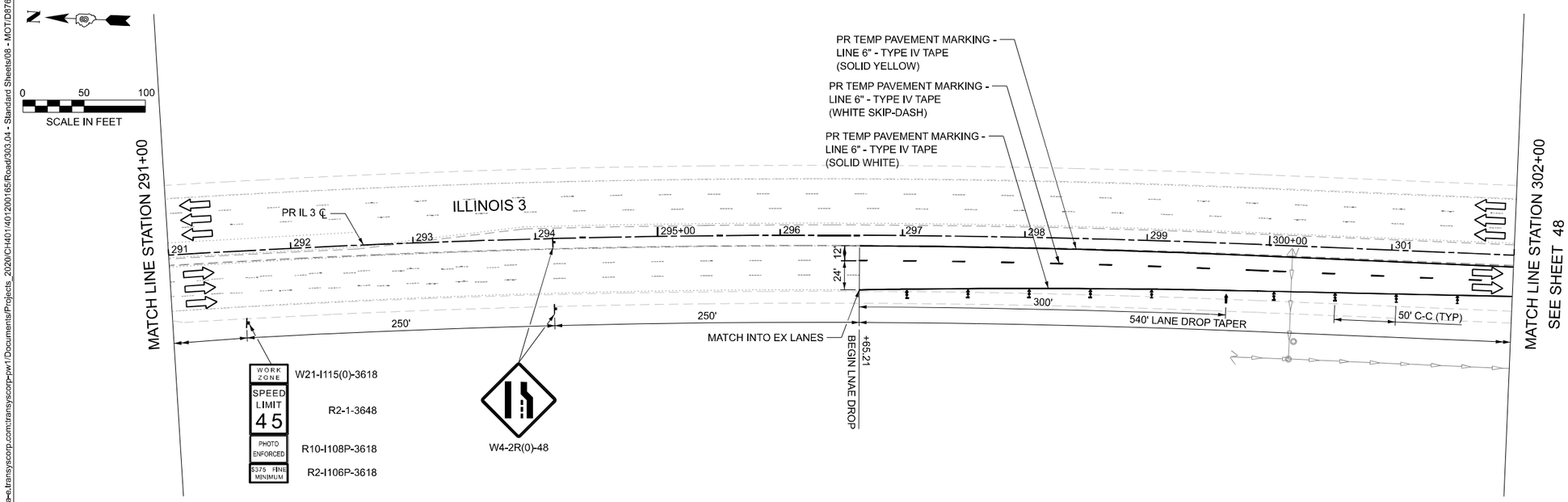

LEGEND

- DRUM WITH STEADY BURN MONODIRECTIONAL LIGHT
- TYPE II BARRICADE WITH STEADY BURN MONODIRECTIONAL LIGHT
- DIRECTION INDICATOR BARRICADE WITH STEADY BURN MONODIRECTIONAL LIGHT
- VERTICAL PANEL
- ARROW BOARD
- DIRECTION OF TRAFFIC
- TYPE III BARRICADE WITH FLASHING LIGHT (2- EA)
- TEMPORARY CONCRETE BARRIER
- IMPACT ATTENUATOR
- TEMPORARY PAVEMENT - PCC 9" DEPTH
- WORK AREA

NOTES

1. TEMPORARY CONCRETE BARRIER PARALLEL WITH TRAFFIC SHALL INCLUDE TEMPORARY PAVEMENT MARKING - LINE 6" - PAINT FOR PAINTING THE BOTTOM 6" OF THE BARRIER PER DISTRICT 8 GENERAL NOTE 16.

MODEL: IL3_MOT - Plan 1-2
FILE NAME: pw://hq-pwin01.s-e.transyscorp.com:transyscorp-pw1/Documents/Projects_2020/CI-H0114012001651/Road/303.04 - Standard Sheets/08 - MOT/D876N65-sht-staging4.dgn

TERRA ENGINEERING LTD.

USER NAME = mbmcwhorter	DESIGNED - TLH	REVISED -	
	DRAWN - TLH	REVISED -	
	CHECKED - NS	REVISED -	
PLOT DATE = 10/15/2025	DATE - 10/15/2025	REVISED -	

STATE OF ILLINOIS
DEPARTMENT OF TRANSPORTATION

ILLINOIS 3 OVER PORT DISTRICT RAILYARD
MAINTENANCE OF TRAFFIC PLAN - STAGE 2

SCALE: 1"=50' | SHEET 1 OF 6 SHEETS | STA. 280+00 TO STA. 302+00

F.A.P RTE.	SECTION	COUNTY	TOTAL SHEETS	SHEET NO.
0002	(103,104)BR-1	MADISON	178	47
		CONTRACT NO. 76N65		
		ILLINOIS	FED. AID PROJECT	

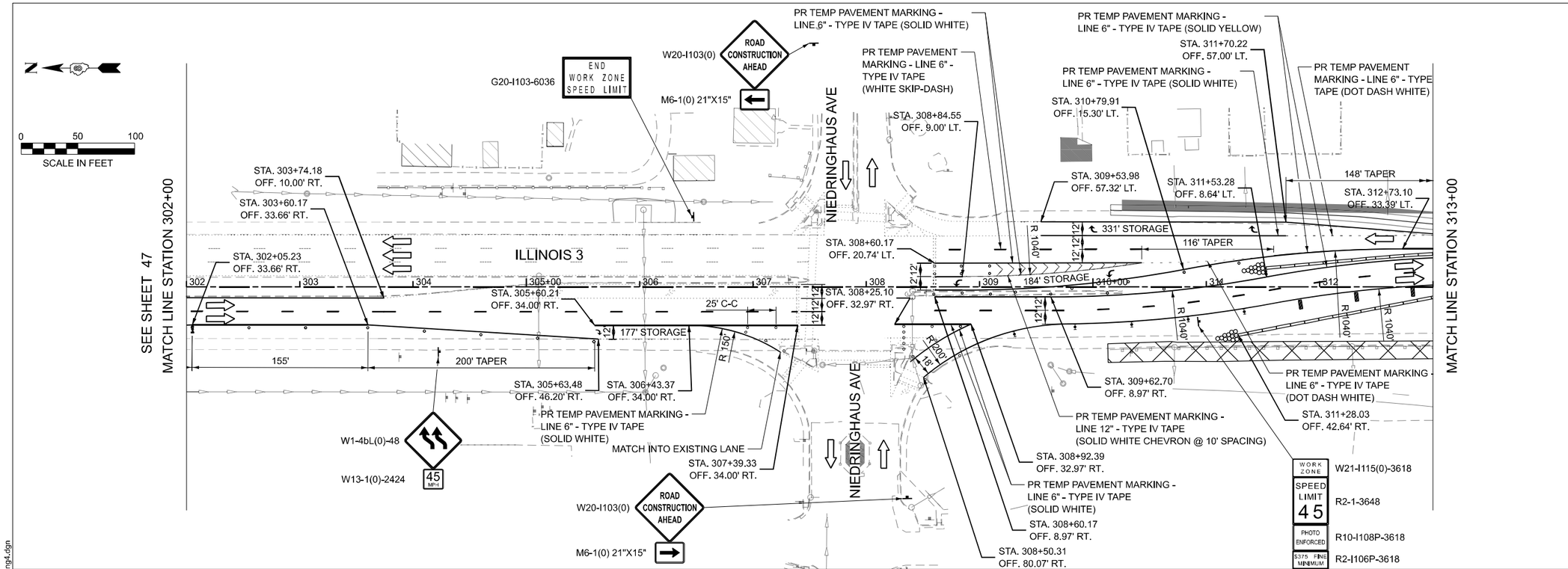

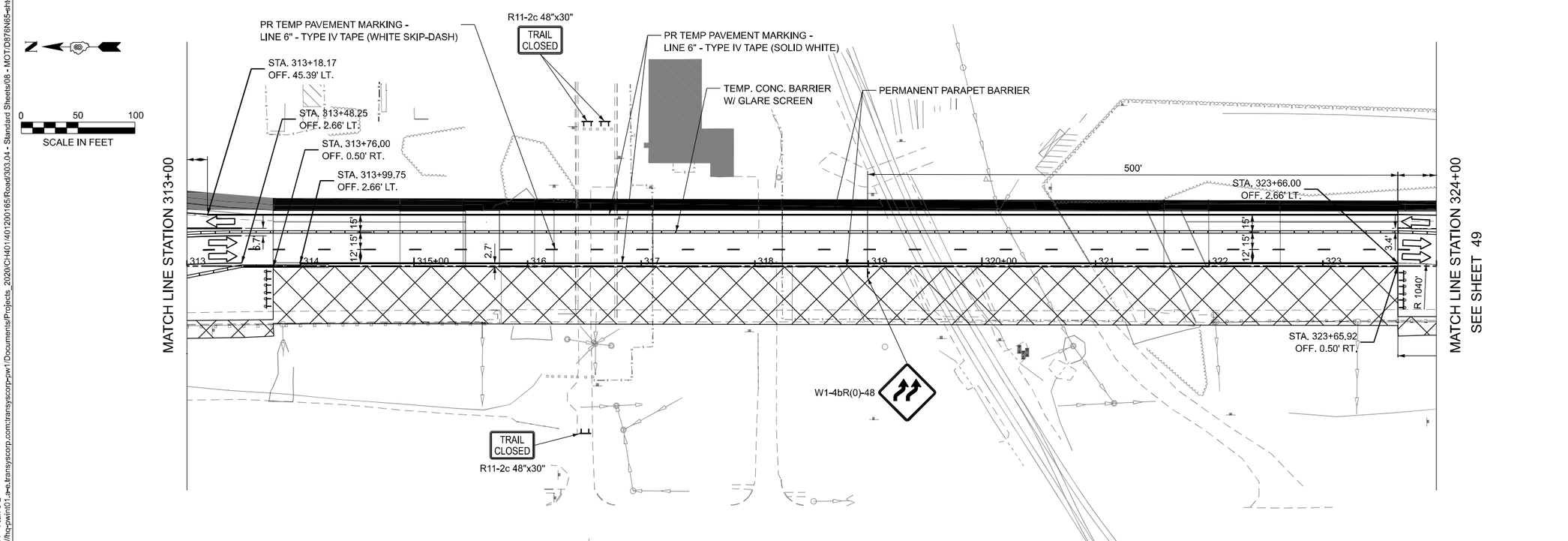

LEGEND

- DRUM WITH STEADY BURN MONODIRECTIONAL LIGHT
- TYPE II BARRICADE WITH STEADY BURN MONODIRECTIONAL LIGHT
- DIRECTION INDICATOR BARRICADE WITH STEADY BURN MONODIRECTIONAL LIGHT
- VERTICAL PANEL
- ARROW BOARD
- DIRECTION OF TRAFFIC
- TYPE III BARRICADE WITH FLASHING LIGHT (2- EA)
- TEMPORARY CONCRETE BARRIER
- IMPACT ATTENUATOR
- TEMPORARY PAVEMENT - PCC 9" DEPTH
- WORK AREA

NOTES

1. TEMPORARY CONCRETE BARRIER PARALLEL WITH TRAFFIC SHALL INCLUDE TEMPORARY PAVEMENT MARKING - LINE 6" - PAINT FOR PAINTING THE BOTTOM 6" OF THE BARRIER PER DISTRICT 8 GENERAL NOTE 16.

MODEL: IL3_MOT - Plan 3-2
FILE NAME: pw://hq-pwin01.a-e.transyscorp.com:transyscorp-pw1/Documents/Projects_2020/CH401401200165/Road/303.04 - Standard Sheets/08 - MOT/D876N65-sht-staging4.dgn

TERRA ENGINEERING LTD.

USER NAME = mbmcwhorter	DESIGNED - TLH	REVISED -	
	DRAWN - TLH	REVISED -	
	CHECKED - NS	REVISED -	
PLOT DATE = 10/15/2025	DATE - 10/15/2025	REVISED -	

STATE OF ILLINOIS
DEPARTMENT OF TRANSPORTATION

ILLINOIS 3 OVER PORT DISTRICT RAILYARD
MAINTENANCE OF TRAFFIC PLAN - STAGE 2

SCALE: 1"=50' | SHEET 2 OF 6 SHEETS | STA. 302+00 TO STA. 324+00

F.A.P RTE.	SECTION	COUNTY	TOTAL SHEETS	SHEET NO.
0002	(103,104)BR-1	MADISON	178	48

CONTRACT NO. 76N65

ILLINOIS FED. AID PROJECT

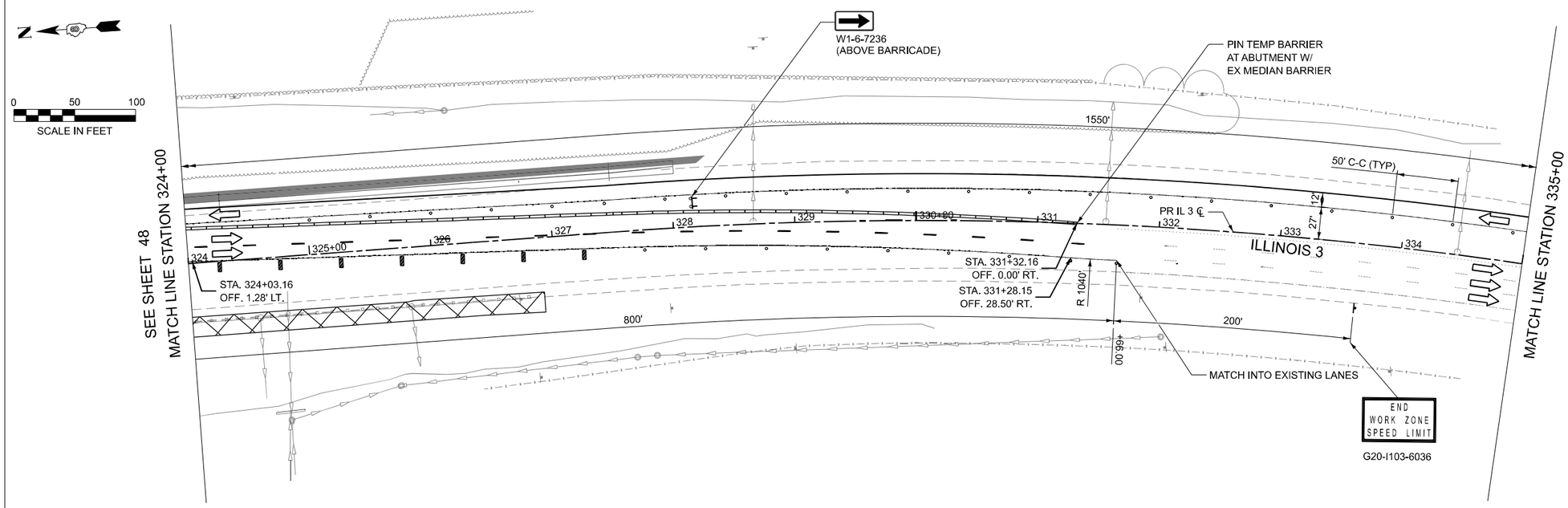

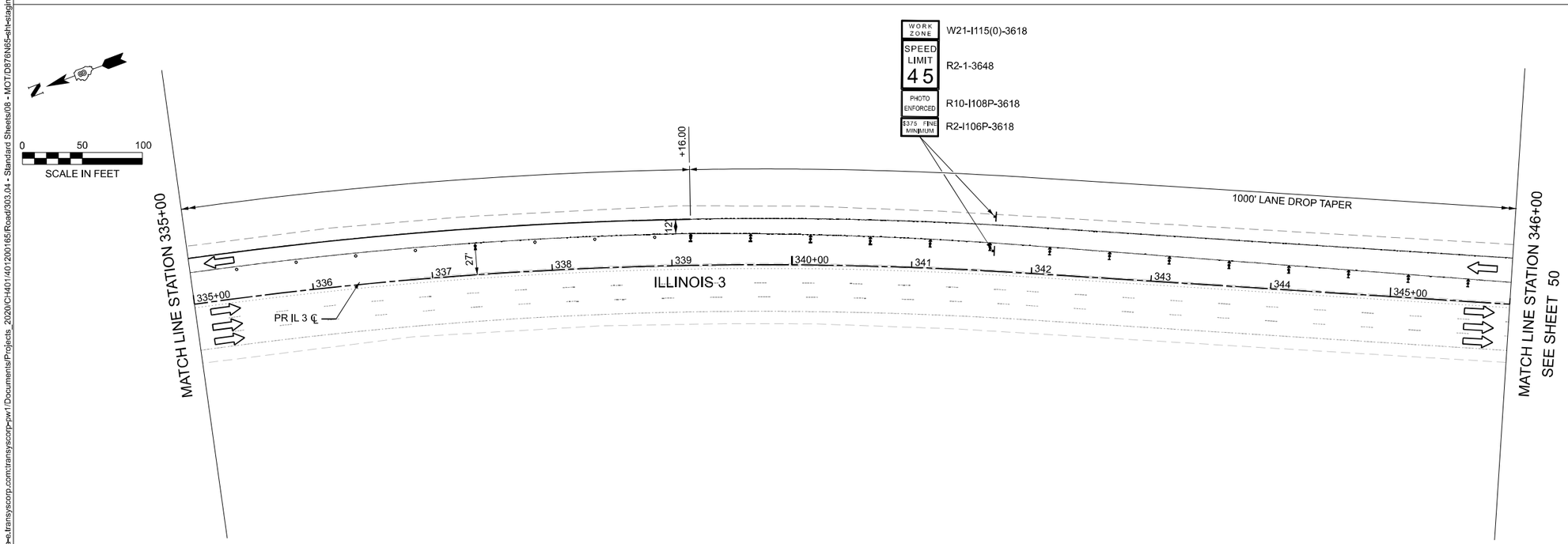

LEGEND

- DRUM WITH STEADY BURN MONODIRECTIONAL LIGHT
- TYPE II BARRICADE WITH STEADY BURN MONODIRECTIONAL LIGHT
- DIRECTION INDICATOR BARRICADE WITH STEADY BURN MONODIRECTIONAL LIGHT
- VERTICAL PANEL
- ARROW BOARD
- DIRECTION OF TRAFFIC
- TYPE III BARRICADE WITH FLASHING LIGHT (2- EA)
- TEMPORARY CONCRETE BARRIER
- IMPACT ATTENUATOR
- TEMPORARY PAVEMENT - PCC 9" DEPTH
- WORK AREA

NOTES

1. TEMPORARY CONCRETE BARRIER PARALLEL WITH TRAFFIC SHALL INCLUDE TEMPORARY PAVEMENT MARKING - LINE 6" - PAINT FOR PAINTING THE BOTTOM 6" OF THE BARRIER PER DISTRICT 8 GENERAL NOTE 16.

MODEL: IL3_MOT - Plan 5-2
FILE NAME: pw://hq-pwin01.a-e.transyscorp.com:transyscorp-pw1/Documents/Projects_2020/CH401/401200165/Road/303.04 - Standard Sheets/08 - MOT/D876N65-sht-staging4.dgn

TERRA ENGINEERING LTD.

USER NAME = mbmcwhorter	DESIGNED - TLH	REVISED -	
	DRAWN - TLH	REVISED -	
	CHECKED - NS	REVISED -	
PLOT DATE = 10/15/2025	DATE - 10/15/2025	REVISED -	

STATE OF ILLINOIS
DEPARTMENT OF TRANSPORTATION

ILLINOIS 3 OVER PORT DISTRICT RAILYARD
MAINTENANCE OF TRAFFIC PLAN - STAGE 2

SCALE: 1"=50' | SHEET 3 OF 6 SHEETS | STA. 324+00 TO STA. 346+00

F.A.P RTE.	SECTION	COUNTY	TOTAL SHEETS	SHEET NO.
0002	(103,104)BR-1	MADISON	178	49
		CONTRACT NO. 76N65		
		ILLINOIS	FED. AID PROJECT	

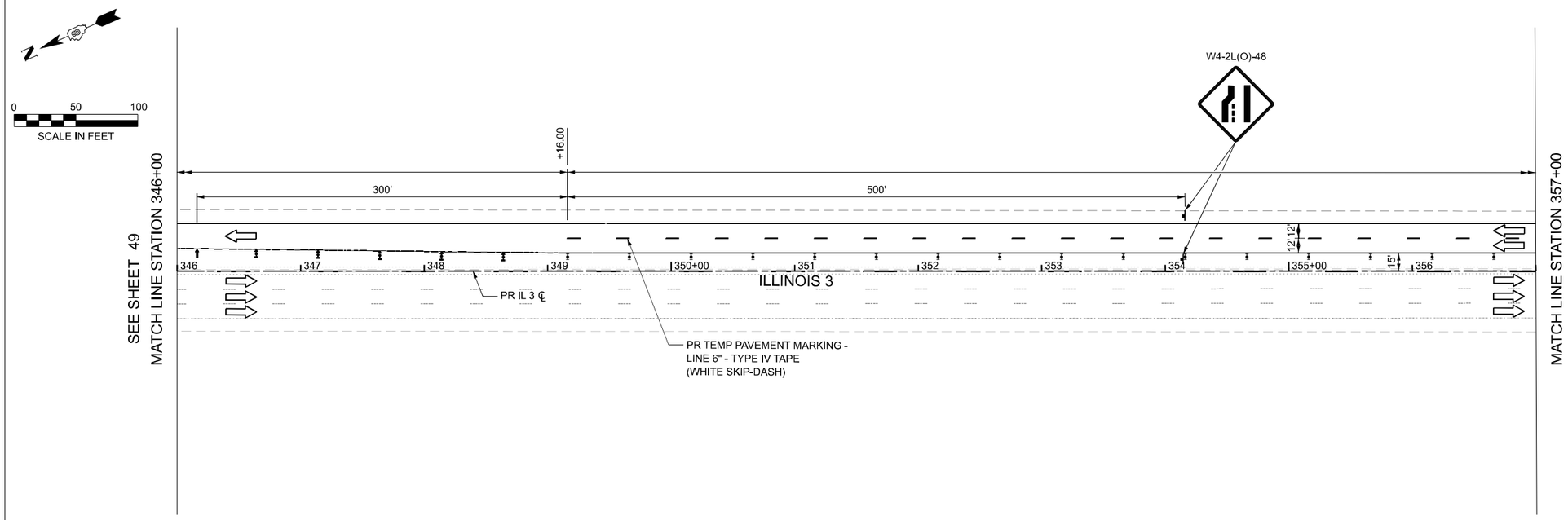

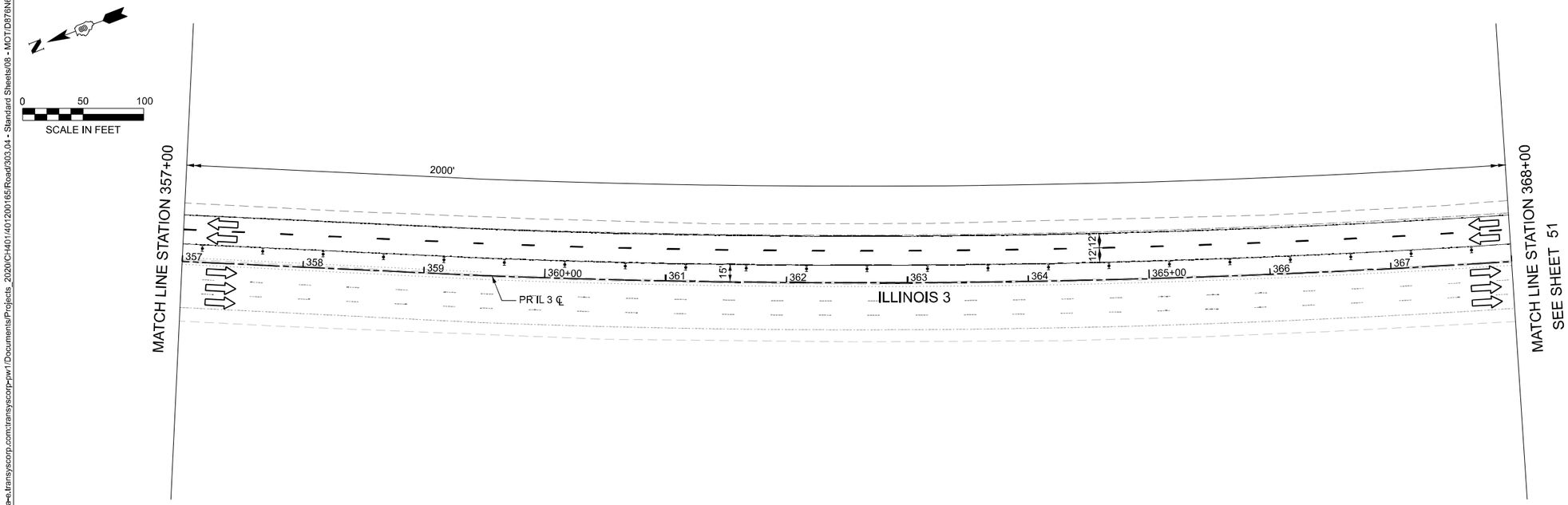

LEGEND

- DRUM WITH STEADY BURN MONODIRECTIONAL LIGHT
- TYPE II BARRICADE WITH STEADY BURN MONODIRECTIONAL LIGHT
- DIRECTION INDICATOR BARRICADE WITH STEADY BURN MONODIRECTIONAL LIGHT
- VERTICAL PANEL
- ARROW BOARD
- DIRECTION OF TRAFFIC
- TYPE III BARRICADE WITH FLASHING LIGHT (2- EA)
- TEMPORARY CONCRETE BARRIER
- IMPACT ATTENUATOR
- TEMPORARY PAVEMENT - PCC 9" DEPTH
- WORK AREA

NOTES

1. TEMPORARY CONCRETE BARRIER PARALLEL WITH TRAFFIC SHALL INCLUDE TEMPORARY PAVEMENT MARKING - LINE 6" - PAINT FOR PAINTING THE BOTTOM 6" OF THE BARRIER PER DISTRICT 8 GENERAL NOTE 16.

MODEL: IL3_MOT - Plan 7-2
FILE NAME: pw://hq-pwin01.a-e.transyscorp.com:transyscorp-pw1/Documents/Projects_2020/CH401401200165/Road/303.04 - Standard Sheets/08 - MOT/D876N65-sht-staging4.dgn

TERRA ENGINEERING LTD.

USER NAME = mbmcwhorter	DESIGNED - TLH	REVISED -	
	DRAWN - TLH	REVISED -	
	CHECKED - NS	REVISED -	
PLOT DATE = 10/15/2025	DATE - 10/15/2025	REVISED -	

STATE OF ILLINOIS
DEPARTMENT OF TRANSPORTATION

ILLINOIS 3 OVER PORT DISTRICT RAILYARD
MAINTENANCE OF TRAFFIC PLAN - STAGE 2

SCALE: 1"=50' | SHEET 4 OF 6 SHEETS | STA. 346+00 TO STA. 368+00

F.A.P RTE.	SECTION	COUNTY	TOTAL SHEETS	SHEET NO.
0002	(103,104)BR-1	MADISON	178	50
		CONTRACT NO. 76N65		
		ILLINOIS	FED. AID PROJECT	

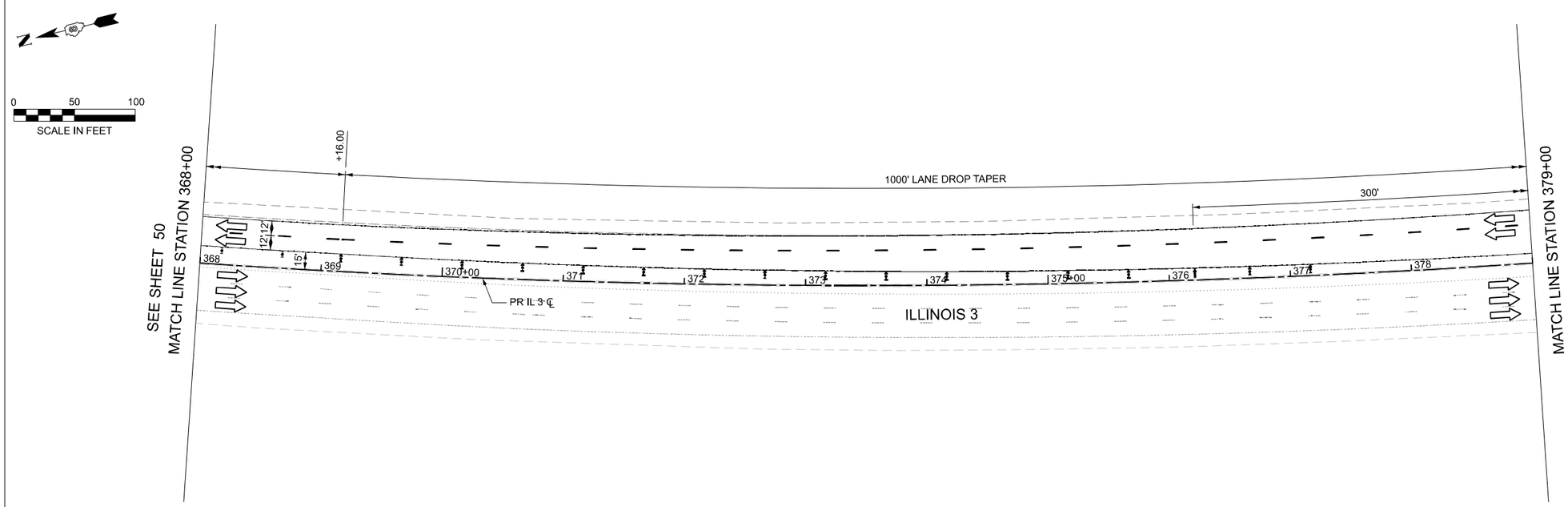

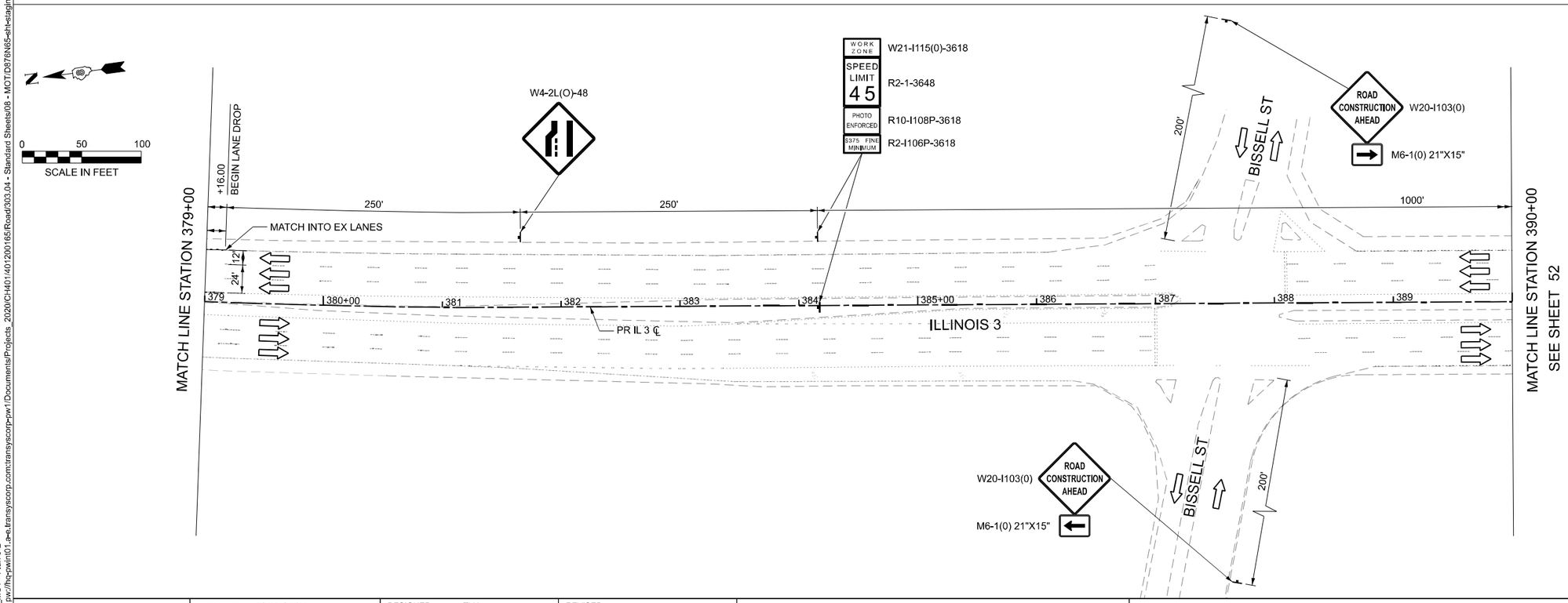

LEGEND

- DRUM WITH STEADY BURN MONODIRECTIONAL LIGHT
- TYPE II BARRICADE WITH STEADY BURN MONODIRECTIONAL LIGHT
- DIRECTION INDICATOR BARRICADE WITH STEADY BURN MONODIRECTIONAL LIGHT
- VERTICAL PANEL
- ARROW BOARD
- DIRECTION OF TRAFFIC
- TYPE III BARRICADE WITH FLASHING LIGHT (2- EA)
- TEMPORARY CONCRETE BARRIER
- IMPACT ATTENUATOR
- TEMPORARY PAVEMENT - PCC 9" DEPTH
- WORK AREA

NOTES

1. TEMPORARY CONCRETE BARRIER PARALLEL WITH TRAFFIC SHALL INCLUDE TEMPORARY PAVEMENT MARKING - LINE 6" - PAINT FOR PAINTING THE BOTTOM 6" OF THE BARRIER PER DISTRICT 8 GENERAL NOTE 16.

MODEL: IL3_MOT - Plan 9-2
FILE NAME: pw://hq-pwim01.a-e.transyscorp.com:transyscorp-pw1/Documents/Projects_2020/CH401401200165/Road/303.04 - Standard Sheets/08 - MOT/D876N65-sht-staging4.dgn

TERRA ENGINEERING LTD.

USER NAME = mbmcwhorter	DESIGNED - TLH	REVISED -	
	DRAWN - TLH	REVISED -	
	CHECKED - NS	REVISED -	
PLOT DATE = 10/15/2025	DATE - 10/15/2025	REVISED -	

STATE OF ILLINOIS
DEPARTMENT OF TRANSPORTATION

ILLINOIS 3 OVER PORT DISTRICT RAILYARD
MAINTENANCE OF TRAFFIC PLAN - STAGE 2

SCALE: 1"=50' | SHEET 5 OF 6 SHEETS | STA. 368+00 TO STA. 390+00

F.A.P RTE.	SECTION	COUNTY	TOTAL SHEETS	SHEET NO.
0002	(103,104)BR-1	MADISON	178	51
		CONTRACT NO. 76N65		
		ILLINOIS	FED. AID PROJECT	

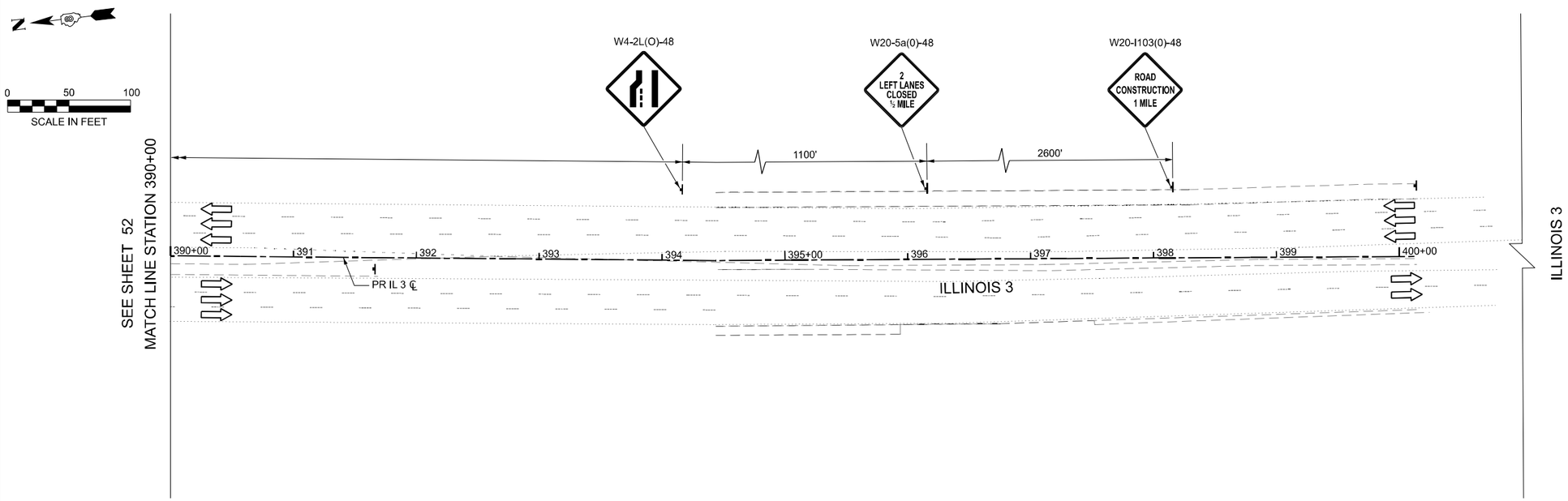

LEGEND

- DRUM WITH STEADY BURN MONODIRECTIONAL LIGHT
- TYPE II BARRICADE WITH STEADY BURN MONODIRECTIONAL LIGHT
- DIRECTION INDICATOR BARRICADE WITH STEADY BURN MONODIRECTIONAL LIGHT
- VERTICAL PANEL
- ARROW BOARD
- DIRECTION OF TRAFFIC
- TYPE III BARRICADE WITH FLASHING LIGHT (2- EA)
- TEMPORARY CONCRETE BARRIER
- IMPACT ATTENUATOR
- TEMPORARY PAVEMENT - PCC 9" DEPTH
- WORK AREA

NOTES

1. TEMPORARY CONCRETE BARRIER PARALLEL WITH TRAFFIC SHALL INCLUDE TEMPORARY PAVEMENT MARKING - LINE 6" - PAINT FOR PAINTING THE BOTTOM 6" OF THE BARRIER PER DISTRICT 8 GENERAL NOTE 16.

MODEL: IL3_MOT - Plan 11-2
FILE NAME: pw://hq-pwin01.a-e.transyscorp.com:transyscorp-pw1/Documents/Projects_2020/CH401401200165/Road/303.04 - Standard Sheets/08 - MOT/D876N65-sht-staging4.dgn

TERRA ENGINEERING LTD.

USER NAME = mbmcwhorter	DESIGNED - TLH	REVISED -	
	DRAWN - TLH	REVISED -	
	CHECKED - NS	REVISED -	
PLOT DATE = 10/15/2025	DATE - 10/15/2025	REVISED -	

STATE OF ILLINOIS
DEPARTMENT OF TRANSPORTATION

ILLINOIS 3 OVER PORT DISTRICT RAILYARD
MAINTENANCE OF TRAFFIC PLAN - STAGE 2

SCALE: 1"=50' | SHEET 6 OF 6 SHEETS | STA. 390+00 TO STA. n/a

F.A.P RTE.	SECTION	COUNTY	TOTAL SHEETS	SHEET NO.
0002	(103,104)BR-1	MADISON	178	52
		CONTRACT NO. 76N65		
		ILLINOIS	FED. AID PROJECT	

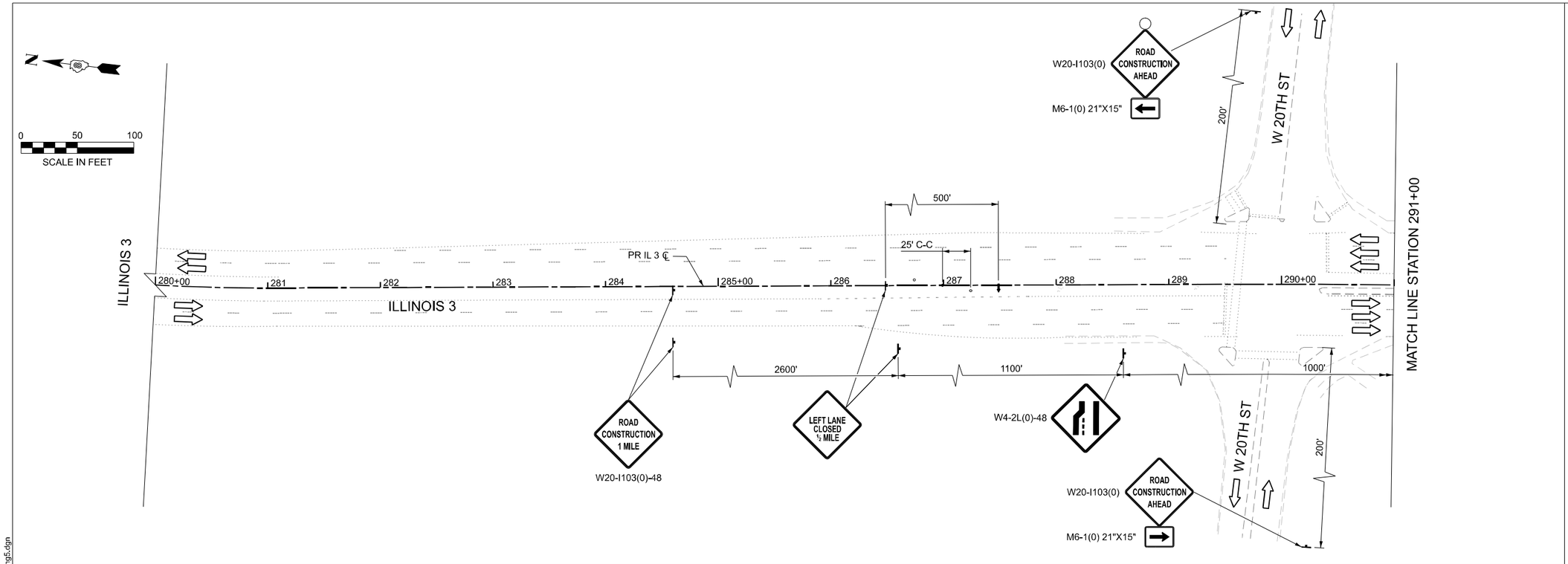

LEGEND

- DRUM WITH STEADY BURN MONODIRECTIONAL LIGHT
- TYPE II BARRICADE WITH STEADY BURN MONODIRECTIONAL LIGHT
- DIRECTION INDICATOR BARRICADE WITH STEADY BURN MONODIRECTIONAL LIGHT
- VERTICAL PANEL
- ARROW BOARD
- DIRECTION OF TRAFFIC
- TYPE III BARRICADE WITH FLASHING LIGHT (2- EA)
- TEMPORARY CONCRETE BARRIER
- IMPACT ATTENUATOR
- TEMPORARY PAVEMENT - PCC 9" DEPTH
- WORK AREA

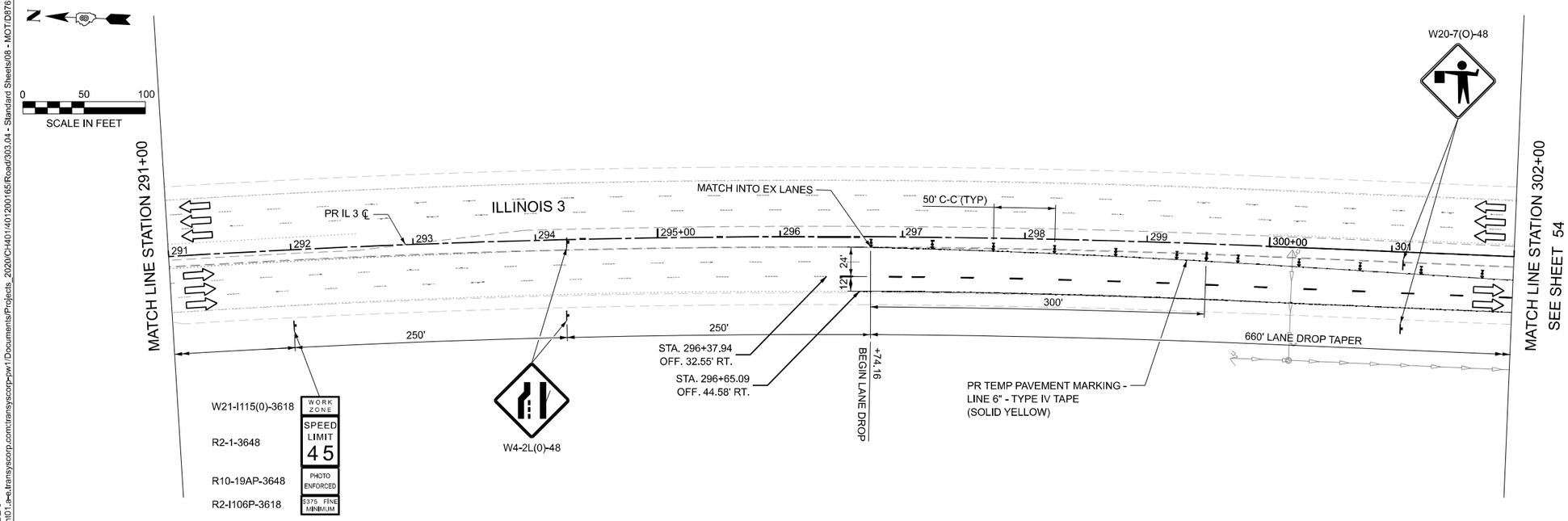

MODEL: SHT-MOT-STAGE-3
FILE NAME: pw://hq-pwint01.a-e.transyscorp.com:transyscorp-pw1/Documents/Projects_2020/CH401/401200165/Road/303.04 - Standard Sheets/08 - MOT/D876N65-sht-staging5.dgn

TERRA ENGINEERING LTD.

USER NAME = mbmcwhorter	DESIGNED - TLH	REVISED -	
	DRAWN - TLH	REVISED -	
	CHECKED - NS	REVISED -	
PLOT DATE = 10/15/2025	DATE - 10/15/2025	REVISED -	

STATE OF ILLINOIS
DEPARTMENT OF TRANSPORTATION

ILLINOIS 3 OVER PORT DISTRICT RAILYARD
MAINTENANCE OF TRAFFIC PLAN - STAGE 3

SCALE: 1"=50' | SHEET 1 OF 5 SHEETS | STA. 280+00 TO STA. 302+00

F.A.P RTE.	SECTION	COUNTY	TOTAL SHEETS	SHEET NO.
0002	(103,104)BR-1	MADISON	178	53

CONTRACT NO. 76N65

ILLINOIS | FED. AID PROJECT

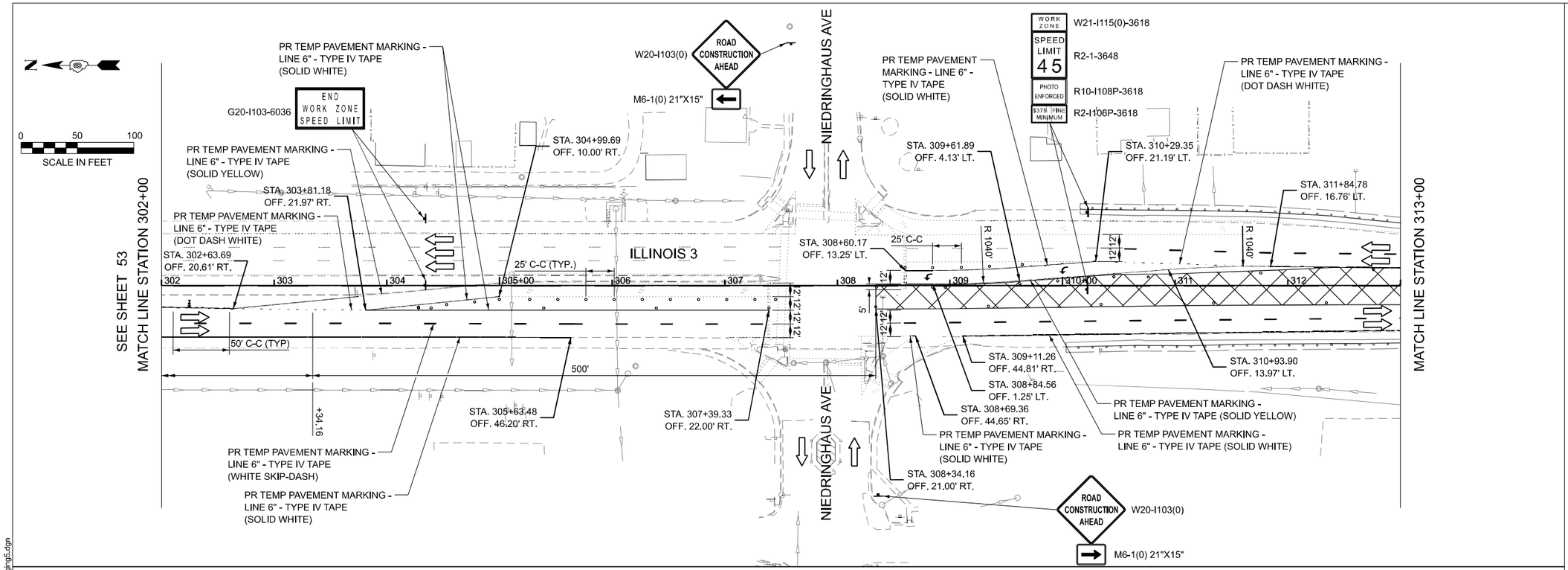

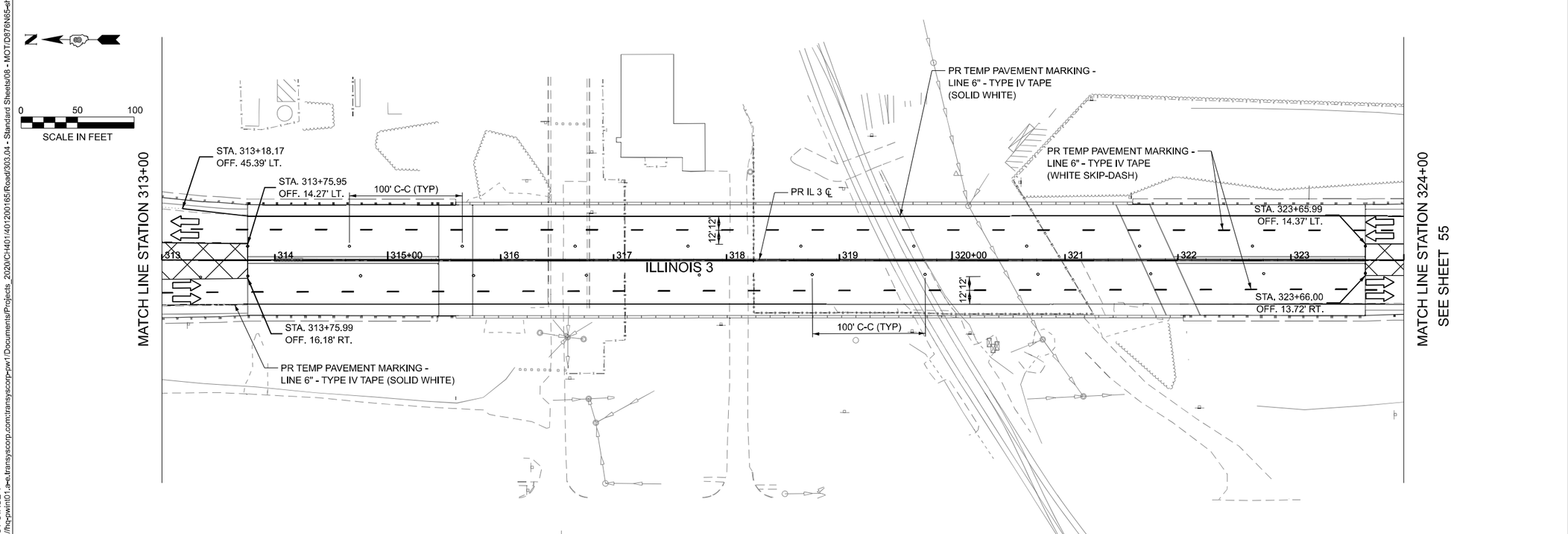

LEGEND

- DRUM WITH STEADY BURN MONODIRECTIONAL LIGHT
- TYPE II BARRICADE WITH STEADY BURN MONODIRECTIONAL LIGHT
- DIRECTION INDICATOR BARRICADE WITH STEADY BURN MONODIRECTIONAL LIGHT
- VERTICAL PANEL
- ARROW BOARD
- DIRECTION OF TRAFFIC
- TYPE III BARRICADE WITH FLASHING LIGHT (2- EA)
- TEMPORARY CONCRETE BARRIER
- IMPACT ATTENUATOR
- TEMPORARY PAVEMENT - PCC 9" DEPTH
- WORK AREA

MODEL: SHT-MOT-STAGE-4
FILE NAME: pw://hq-pwint01.a-e.transyscorp.com:transyscorp-pw1/Documents/Projects_2020/CH401/401200165/Road/303.04 - Standard Sheets/08 - MOT/D876N65-sht-staging5.dgn

TERRA ENGINEERING LTD.

USER NAME = mbmcwhorter	DESIGNED - TLH	REVISED -	
	DRAWN - TLH	REVISED -	
	CHECKED - NS	REVISED -	
PLOT DATE = 10/15/2025	DATE - 10/15/2025	REVISED -	

STATE OF ILLINOIS
DEPARTMENT OF TRANSPORTATION

ILLINOIS 3 OVER PORT DISTRICT RAILYARD
MAINTENANCE OF TRAFFIC PLAN - STAGE 3

SCALE: 1"=50' | SHEET 2 OF 5 SHEETS | STA. 302+00 TO STA. 324+00

F.A.P RTE.	SECTION	COUNTY	TOTAL SHEETS	SHEET NO.
0002	(103,104)BR-1	MADISON	178	54

CONTRACT NO. 76N65

ILLINOIS | FED. AID PROJECT

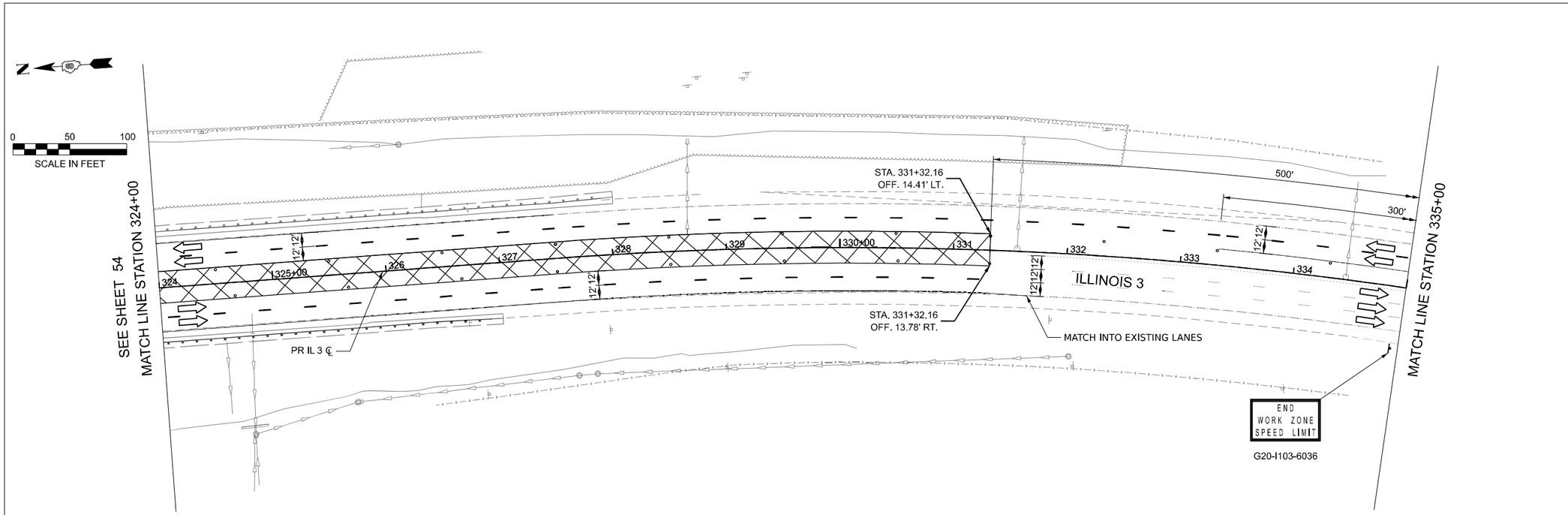

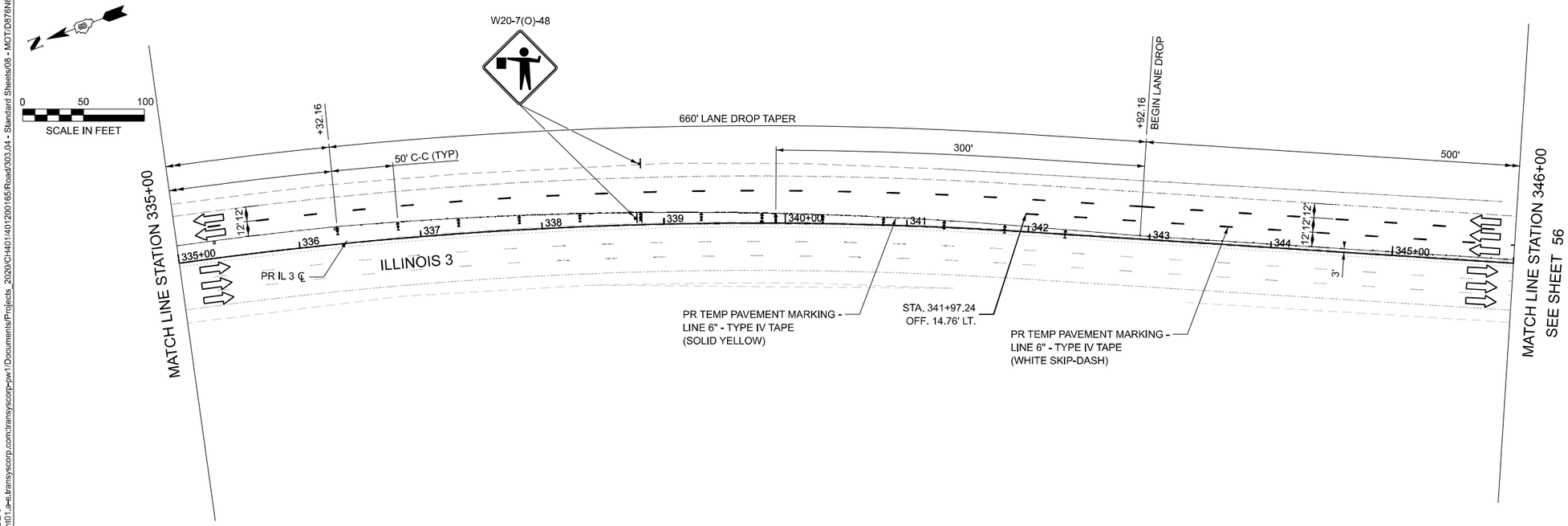

LEGEND

- DRUM WITH STEADY BURN MONODIRECTIONAL LIGHT
- TYPE II BARRICADE WITH STEADY BURN MONODIRECTIONAL LIGHT
- DIRECTION INDICATOR BARRICADE WITH STEADY BURN MONODIRECTIONAL LIGHT
- VERTICAL PANEL
- ARROW BOARD
- DIRECTION OF TRAFFIC
- TYPE III BARRICADE WITH FLASHING LIGHT (2- EA)
- TEMPORARY CONCRETE BARRIER
- IMPACT ATTENUATOR
- TEMPORARY PAVEMENT - PCC 9" DEPTH
- WORK AREA

MODEL: SHT-MOT-STAGE-5
FILE NAME: pw://hq-pwint01.a-e.transyscorp.com:transyscorp-pw1/Documents/Projects_2020/CH401/4012001650 Road/303.04 - Standard Sheets/08 - MOT/D876N65-sht-staging5.dgn

TERRA ENGINEERING LTD.

USER NAME = mbmcwhorter	DESIGNED - TLH	REVISED -	
	DRAWN - TLH	REVISED -	
	CHECKED - NS	REVISED -	
PLOT DATE = 10/15/2025	DATE - 10/15/2025	REVISED -	

STATE OF ILLINOIS
DEPARTMENT OF TRANSPORTATION

ILLINOIS 3 OVER PORT DISTRICT RAILYARD
MAINTENANCE OF TRAFFIC PLAN - STAGE 3

SCALE: 1"=50' | SHEET 3 OF 5 SHEETS | STA. 324+00 TO STA. 346+00

F.A.P RTE.	SECTION	COUNTY	TOTAL SHEETS	SHEET NO.
0002	(103,104)BR-1	MADISON	178	55

CONTRACT NO. 76N65

ILLINOIS FED. AID PROJECT

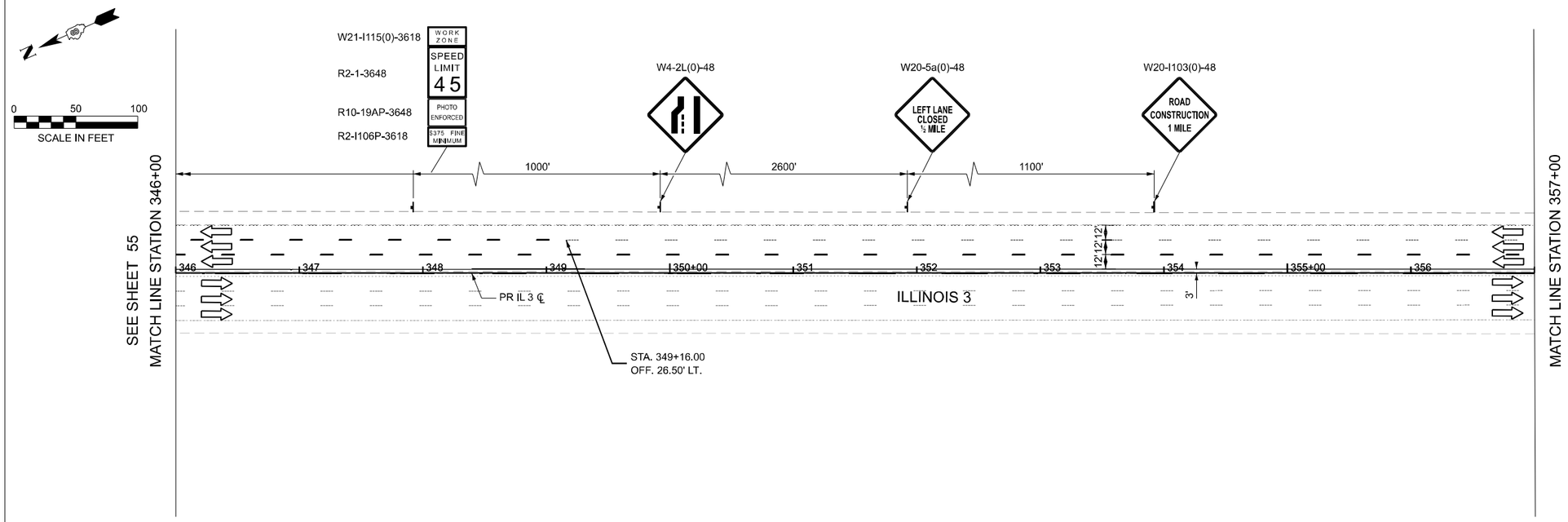

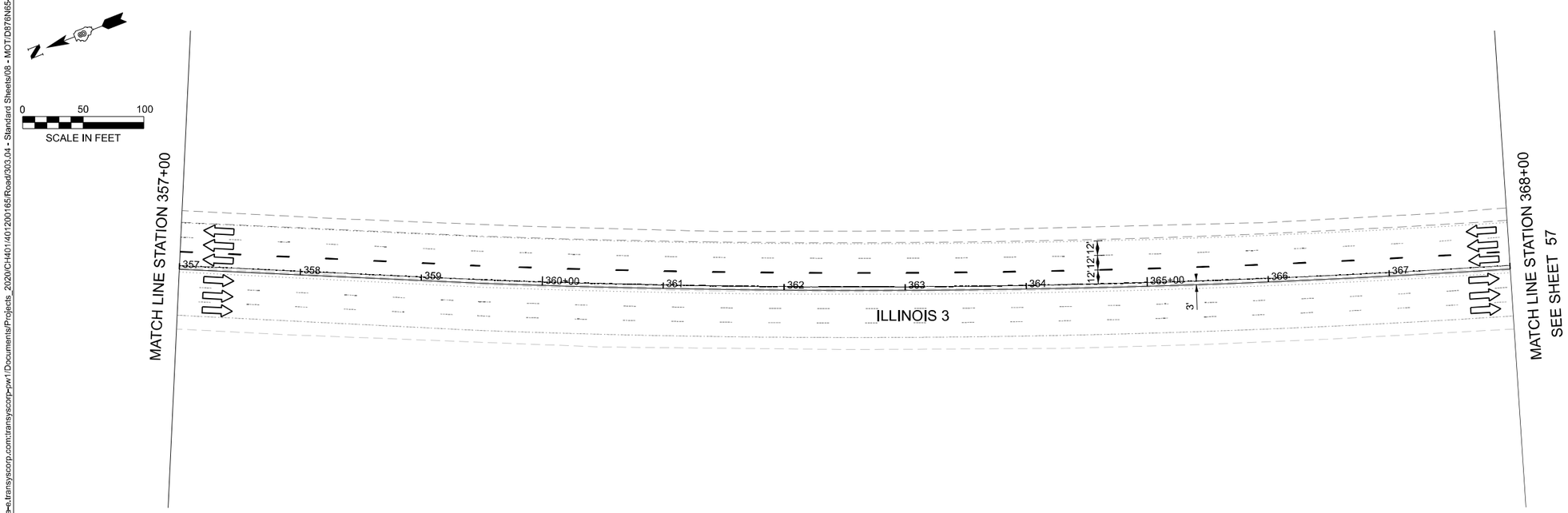

LEGEND

- DRUM WITH STEADY BURN MONODIRECTIONAL LIGHT
- TYPE II BARRICADE WITH STEADY BURN MONODIRECTIONAL LIGHT
- DIRECTION INDICATOR BARRICADE WITH STEADY BURN MONODIRECTIONAL LIGHT
- VERTICAL PANEL
- ARROW BOARD
- DIRECTION OF TRAFFIC
- TYPE III BARRICADE WITH FLASHING LIGHT (2- EA)
- TEMPORARY CONCRETE BARRIER
- IMPACT ATTENUATOR
- TEMPORARY PAVEMENT - PCC 9" DEPTH
- WORK AREA

MODEL: SHT-MOT-STAGE-6
FILE NAME: pw://hq-pwint01.ae.transyscorp.com:transyscorp-pw1/Documents/Projects_2020/CH401/401200165/Road/303.04 - Standard Sheets/08 - MOT/D876N65-sht-staging5.dgn

TERRA ENGINEERING LTD.

USER NAME = mbmcwhorter	DESIGNED - TLH	REVISED -	
	DRAWN - TLH	REVISED -	
	CHECKED - NS	REVISED -	
PLOT DATE = 10/15/2025	DATE - 10/15/2025	REVISED -	

STATE OF ILLINOIS
DEPARTMENT OF TRANSPORTATION

ILLINOIS 3 OVER PORT DISTRICT RAILYARD
MAINTENANCE OF TRAFFIC PLAN - STAGE 3

SCALE: 1"=50' | SHEET 4 OF 5 SHEETS | STA. 346+00 TO STA. 368+00

F.A.P RTE.	SECTION	COUNTY	TOTAL SHEETS	SHEET NO.
0002	(103,104)BR-1	MADISON	178	56

CONTRACT NO. 76N65

ILLINOIS FED. AID PROJECT

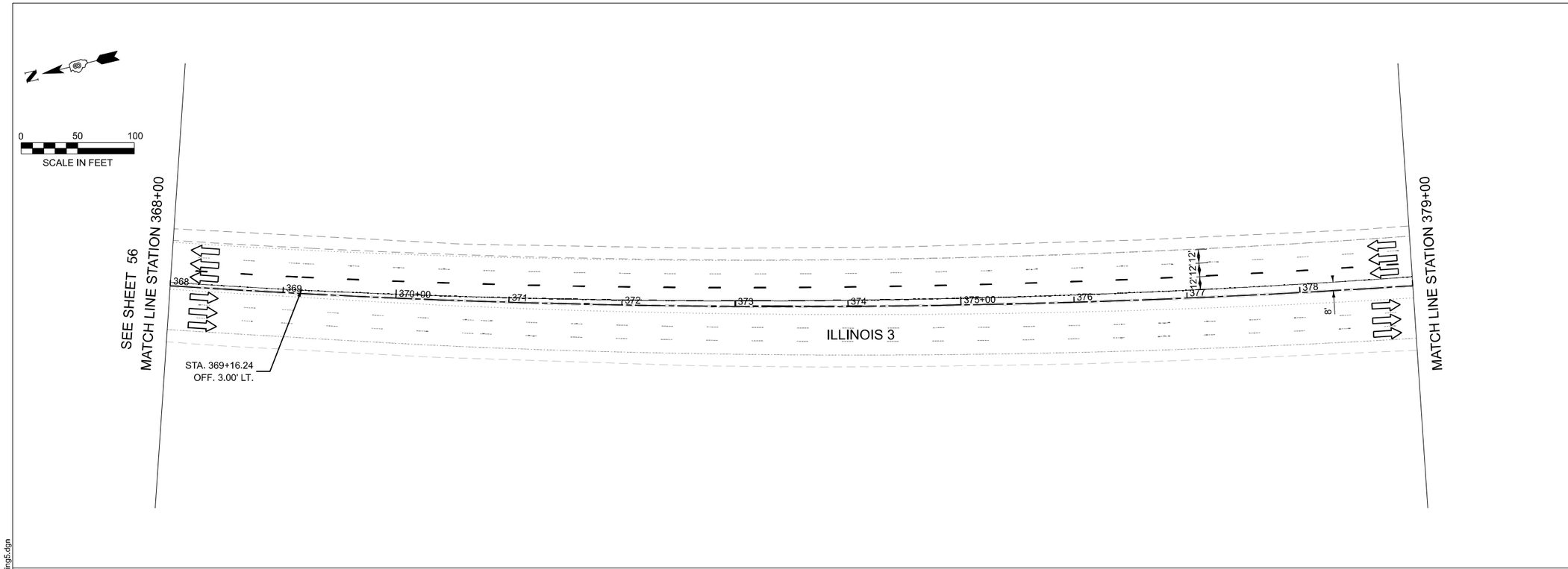

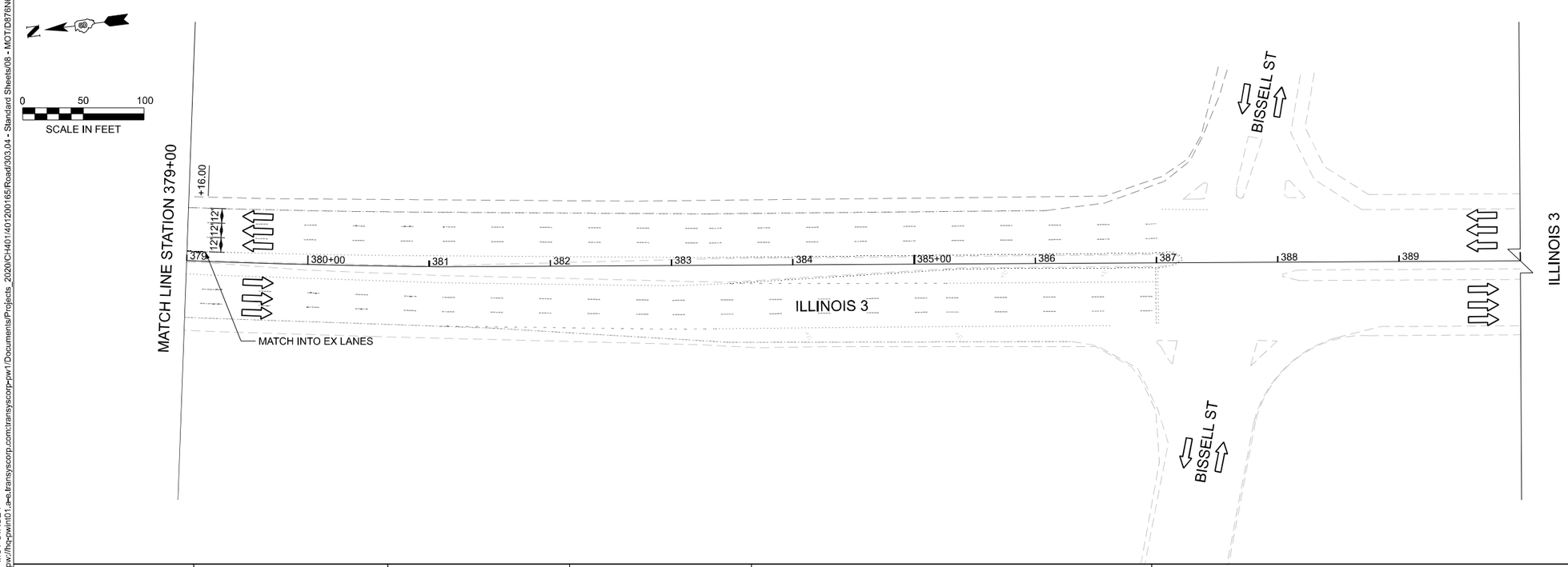

LEGEND

- DRUM WITH STEADY BURN MONODIRECTIONAL LIGHT
- TYPE II BARRICADE WITH STEADY BURN MONODIRECTIONAL LIGHT
- DIRECTION INDICATOR BARRICADE WITH STEADY BURN MONODIRECTIONAL LIGHT
- VERTICAL PANEL
- ARROW BOARD
- DIRECTION OF TRAFFIC
- TYPE III BARRICADE WITH FLASHING LIGHT (2- EA)
- TEMPORARY CONCRETE BARRIER
- IMPACT ATTENUATOR
- TEMPORARY PAVEMENT - PCC 9" DEPTH
- WORK AREA

MODEL: SHT-MOT-STAGE-7
FILE NAME: pw://hq-pwint01.ae.transyscorp.com:transyscorp-pw1/Documents/Projects_2020/CH401/401200165/Road/303.04 - Standard Sheets/08 - MOT/D876N65-sht-staging5.dgn

TERRA ENGINEERING LTD.

USER NAME = mbmcwhorter	DESIGNED - TLH	REVISED -	
	DRAWN - TLH	REVISED -	
	CHECKED - NS	REVISED -	
PLOT DATE = 10/15/2025	DATE - 10/15/2025	REVISED -	

STATE OF ILLINOIS
DEPARTMENT OF TRANSPORTATION

ILLINOIS 3 OVER PORT DISTRICT RAILYARD
MAINTENANCE OF TRAFFIC PLAN - STAGE 3

SCALE: 1"=50' | SHEET 5 OF 5 SHEETS | STA. 368+00 TO STA. 390+00

F.A.P RTE.	SECTION	COUNTY	TOTAL SHEETS	SHEET NO.
0002	(103,104)BR-1	MADISON	178	57

CONTRACT NO. 76N65

ILLINOIS FED. AID PROJECT

N

NOTES:

1. ALL SIGNS REQUIRED WILL BE SUPPLIED TO THE CONTRACTOR BY IDOT.
2. THE CONTRACTOR SHALL FURNISH THE POSTS AND ERECT SIGNS AT THE LOCATIONS SHOWN ON THIS SHEET, AS DIRECTED BY RE/RT THE POSTS SHALL REMAIN THE PROPERTY OF THE CONTRACTOR.
3. THE CONTRACTOR SHALL GIVE ILLINOIS DEPARTMENT OF TRANSPORTATION, BUREAU OF OPERATIONS TWO WEEKS NOTICE FOR SIGNS. THE CONTRACTOR SHALL PICK UP THE SIGNS AT THE T.M. BUILDING IN FAIRVIEW HEIGHTS, AND SHALL RETURN THEM UPON COMPLETION OF THE CONTRACT. CONTACT JEAN SLAPE AT (618)394-2189.
4. THE ABOVE NOTED WORK SHALL BE PAID FOR AT THE CONTRACT UNIT PRICE, LUMP SUM, FOR WIDE LOAD SIGNING AND NO OTHER COMPENSATION WILL BE ALLOWED.
5. SIGN SPACING WILL BE 400' OR TO FIT FIELD CONDITIONS.
6. THE HEIGHT TO THE BOTTOM OF THE LOWEST SIGN SHALL NOT BE LESS THAN 6'.

NOTE: NOT TO SCALE

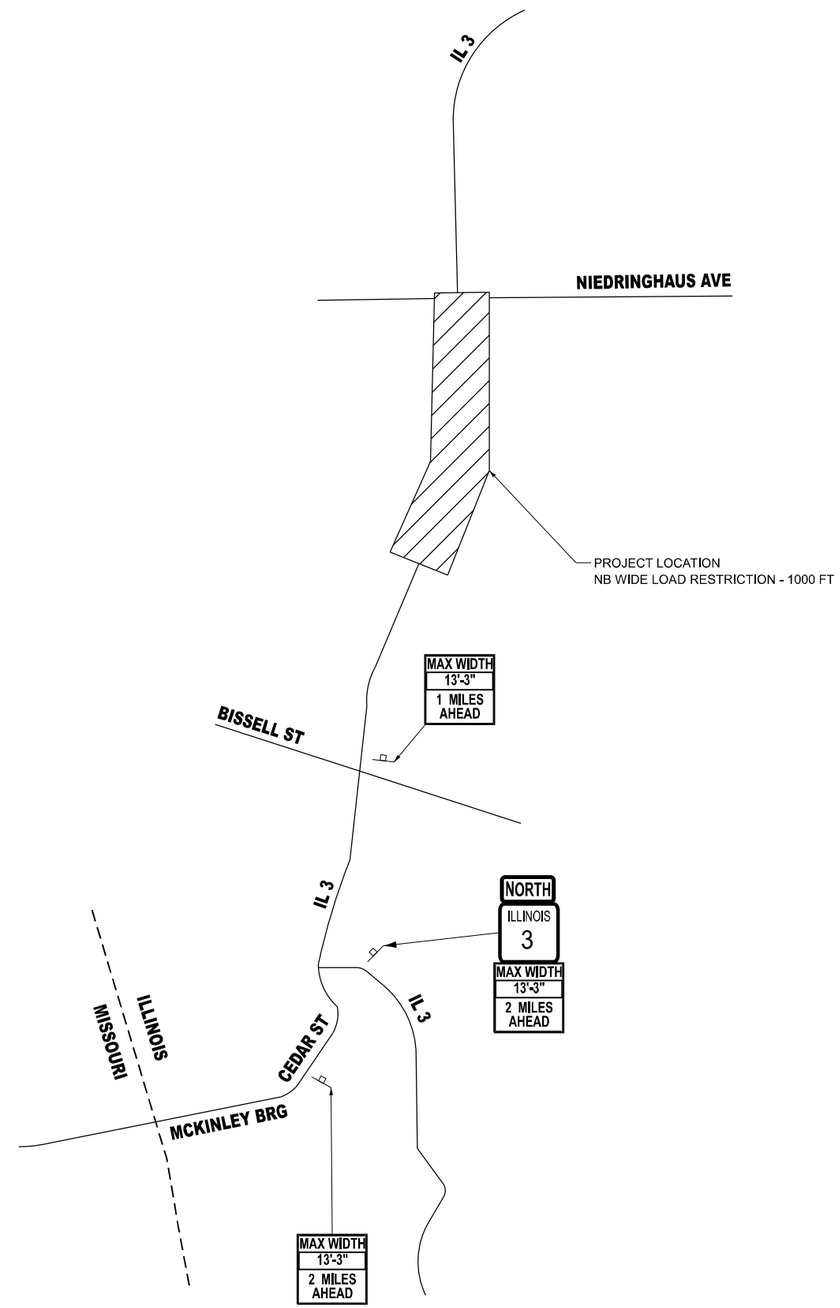

SIGNS REQUIRED

MAX WIDTH 13'-3" 1 MILES AHEAD	(1)	ILLINOIS 3	(3)
MAX WIDTH 13'-3" 2 MILES AHEAD	(2)	NORTH	(4)

MODEL: Default
FILE NAME: pw://ho-pwint01.ae.transyscorp.com:transyscorp-pw1/Documents/Projects_2020/CH401/4012001165/Road/303.04 - Standard Sheets/15 - PMK & Signing/D876N65-sht-signing.dgn

TERRA ENGINEERING LTD.

USER NAME = mbmcwhorter	DESIGNED - TLH	REVISED -	
	DRAWN - TLH	REVISED -	
	CHECKED - NS	REVISED -	
PLOT DATE = 10/15/2025	DATE - 10/15/2025	REVISED -	

STATE OF ILLINOIS
DEPARTMENT OF TRANSPORTATION

ILLINOIS 3 OVER PORT DISTRICT RAILYARD
WIDE LOAD SIGNING PLAN

SCALE: 1"=50' | SHEET 1 OF 1 SHEETS | STA. TO STA.

F.A.P RTE.	SECTION	COUNTY	TOTAL SHEETS	SHEET NO.
0002	(103,104)BR-1	MADISON	178	58

CONTRACT NO. 76N65

ILLINOIS FED. AID PROJECT

GENERAL NOTES

1. ALL EROSION CONTROL PRODUCTS SHALL BE SPECIFICALLY RECOMMENDED BY THE MANUFACTURER FOR THE USE SPECIFIED IN THE EROSION CONTROL PLAN, PRIOR TO APPROVAL AND USE OF THE PRODUCT. THE CONTRACTOR SHALL SUBMIT TO THE ENGINEER A NOTARIZED CERTIFICATION BY THE PRODUCER STATING THE INTENDED USE OF THE PRODUCT AND THAT THE PHYSICAL PROPERTIES REQUIRED FOR THIS APPLICATION ARE MET OR EXCEEDED. THE CONTRACTOR SHALL PROVIDE MANUFACTURER RECOMMENDED INSTALLATION PROCEDURE TO FACILITATE THE ENGINEER IN CONSTRUCTION INSPECTION.

2. STRAW BALES, HAY BALES PERIMETER EROSION BARRIER, AND SILT FENCES WILL NOT BE PERMITTED FOR TEMPORARY OR PERMANENT DITCH CHECKS. DITCH CHECKS SHALL BE COMPOSED OF AGGREGATE, SILT PANELS, ROLLED EXCELSIOR, URETHANE FOAM/GEOTEXTILE (SILT WEDGES), EARTH MEDIAN AND/OR OTHER MATERIAL APPROVED BY THE EROSION AND SEDIMENT CONTROL COORDINATOR.

3. TEMPORARY DITCH CHECK, GEOTEXTILES, ROLLED EXCELSIOR, SILT WEDGES, PANELS SHALL BE LOCATED AT EVERY 1.5 FT FALL/RISE IN DITCH GRADE.

4. TEMPORARY DITCH CHECKS, AGGREGATE USES GRADING NO. 3 SHALL BE REMOVED AT END OF CONSTRUCTION.

5. TEMPORARY SEEDING SHALL BE COMPLETED ON A WEEKLY BASIS ON EXPOSED GROUND AND SHALL BE PAID FOR AS "TEMPORARY EROSION SEEDING" AND NO OTHER PAYMENT WILL BE PERMITTED. FOR CALCULATION PURPOSES, TWELVE APPLICATIONS OF TEMPORARY SEEDING WERE ASSUMED.

6. AREAS DISTURBED FOR ANY REASON SHALL BE PERMANENTLY SEEDED AS DIRECTED BY THE ENGINEER. ALL AREAS DISTURBED BY THE CONTRACTOR OUTSIDE THE PROPOSED CONSTRUCTION LIMITS SHALL BE SEEDED AT THE CONTRACTOR'S EXPENSE.

7. CLASS 2A SEEDING AND EROSION CONTROL BLANKET IS TO BE PLACED AS SOON AS EARTHWORK IS COMPLETED.

8. EARTH STOCKPILES SHALL BE TEMPORARILY SEEDED IF THEY ARE TO REMAIN UNUSED FOR MORE THAN FOURTEEN DAYS.

9. ALL SEEDING SHALL BE PERFORMED AS SOON AS POSSIBLE.

EROSION CONTROL SCHEDULE

LOCATION			TEMPORARY EROSION CONTROL SEEDING	TEMPORARY DITCH CHECKS	PERIMETER EROSION BARRIER	TEMPORARY EROSION CONTROL BLANKET
FROM STATION	TO STATION	LT/RT	POUND	FOOT	FOOT	SQ YD
310+20.50	316+42.04	LT	18.50	13	733	893
316+55.49	316+76.49	LT	1.00			46
316+79.02	318+03.4	LT	9.25			442
318+17.77	319+13.55	LT	6.50			313
321+55.84	327+97.73	LT	16.50	16	909	797
310+13.12	316+42.99	RT	14.50	33	773	700
316+55.60	318+02.77	RT	52.75			2,548
318+18.85	320+47.69	RT	63.25			3,058
322+02.57	326+92.20	RT	13.00	28	670	621
		TOTAL	**195.25**	**90**	**3,085**	**9,418**

INLET FILTER SCHEDULE

LOCATION		INLET FILTERS
STATION	LT/RT	EACH
308+20.35	LT	1
310+72.94	LT	1
311+35.32	LT	1
312+60.09	LT	1
315+60.14	LT	1
318+21.19	LT	1
320+14.35	LT	1
321+58.81	LT	1
323+15.95	LT	1
324+78.23	LT	1
326+19.18	LT	1
326+34.50	LT	1
328+65.89	LT	1
331+55.87	LT	1
307+61.30	RT	1
307+90.08	RT	1
308+40.46	RT	1
308+40.81	RT	1
308+47.95	RT	1
310+71.88	RT	1
312+28.35	RT	1
313+84.31	RT	1
315+60.23	RT	1
316+34.87	RT	1
316+59.30	RT	1
316+75.02	RT	1
316+78.08	RT	1
316+84.37	RT	1
316+94.00	RT	1
318+51.79	RT	1
319+14.57	RT	1
320+80.22	RT	1
321+16.19	RT	1
322+04.15	RT	1
322+04.33	RT	1
323+30.90	RT	1
324+55.80	RT	1
324+75.37	RT	1
325+67.33	RT	1
325+80.49	RT	1
	TOTAL	**40**

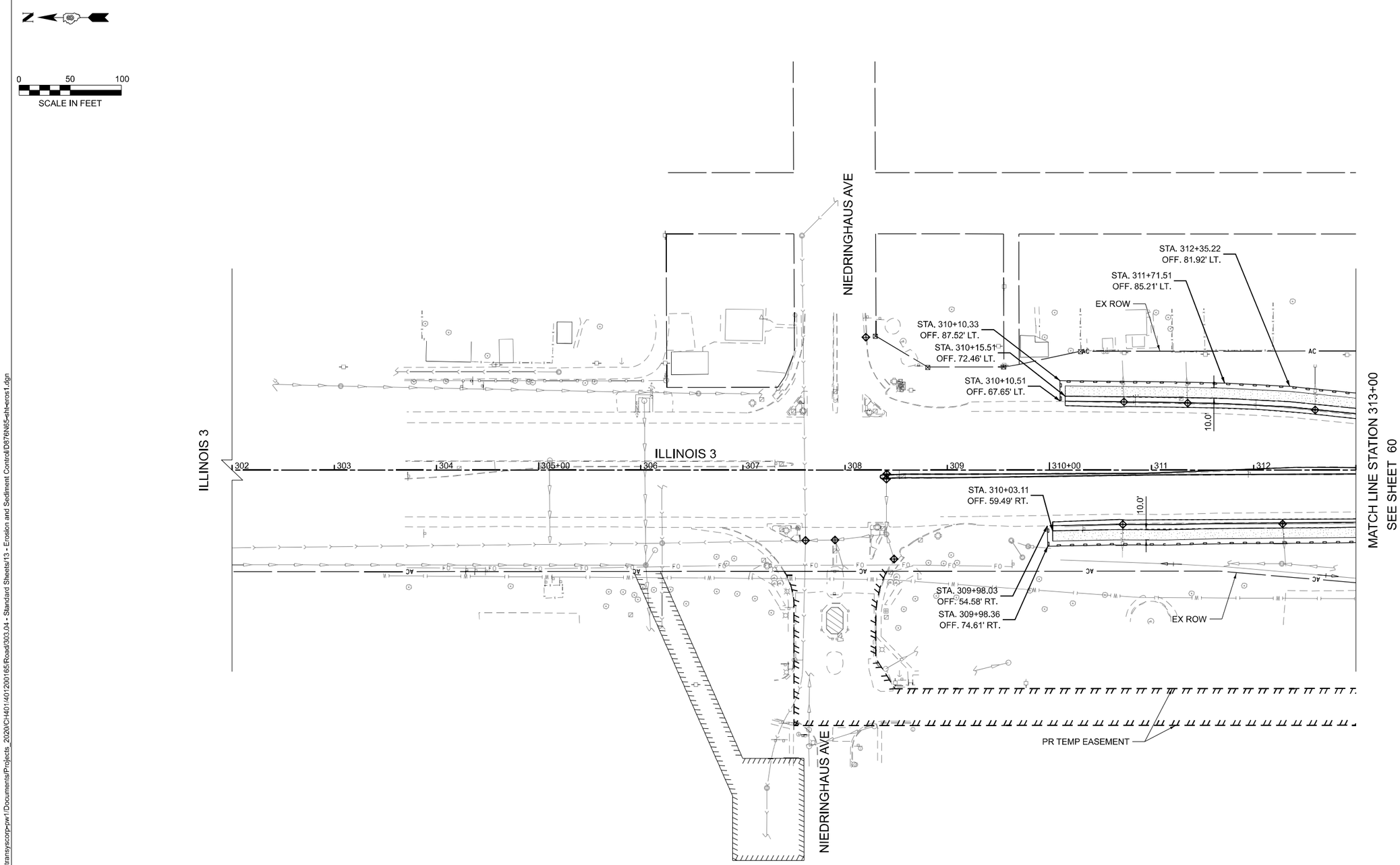

LEGEND

- INLET FILTERS (28000510)
- TEMPORARY DITCH CHECKS (28000305)
- PERIMETER EROSION BARRIER (28000400)
- TEMPORARY EROSION CONTROL SEEDING (28000250) TEMPORARY EROSION CONTROL BLANKET (28001100)
- GUARDRAIL AGGREGATE EROSION CONTRL (Z0001002)

NOTE:
ALL ITEMS SHALL BE CONSTRUCTED AS SHOWN ON STANDARD 280001-07 AND AS DIRECTED BY THE ENGINEER.

MODEL: 50 SCALE PLAN - Plan 1
FILE NAME: pw://hq-pwinfo1.ae.transyscorp.com:transyscorp-pw1/Documents/Projects_2020/CH401/401200165/Road/303.04 - Standard Sheets/13 - Erosion and Sediment Control/D876N65-sht-eros1.dgn

TERRA ENGINEERING LTD.

USER NAME = mbmcwhorter	DESIGNED - XL	REVISED -	
	DRAWN - XL	REVISED -	
	CHECKED - JRH	REVISED -	
PLOT DATE = 10/15/2025	DATE - 10/15/2025	REVISED -	

STATE OF ILLINOIS
DEPARTMENT OF TRANSPORTATION

ILLINOIS 3 OVER PORT DISTRICT RAILYARD
EROSION AND SEDIMENT CONTROL PLAN

SCALE: 1"=50' | SHEET 1 OF 3 SHEETS | STA. 302+00 TO STA. 313+00

F.A.P RTE.	SECTION	COUNTY	TOTAL SHEETS	SHEET NO.
0002	(103,104)BR-1	MADISON	178	60

CONTRACT NO. 76N65

ILLINOIS | FED. AID PROJECT

LEGEND

- INLET FILTERS (28000510)
- TEMPORARY DITCH CHECKS (28000305)
- PERIMETER EROSION BARRIER (28000400)
- TEMPORARY EROSION CONTROL SEEDING (28000250) TEMPORARY EROSION CONTROL BLANKET (28001100)
- GUARDRAIL AGGREGATE EROSION CONTRL (Z0001002)

0 50 100
SCALE IN FEET

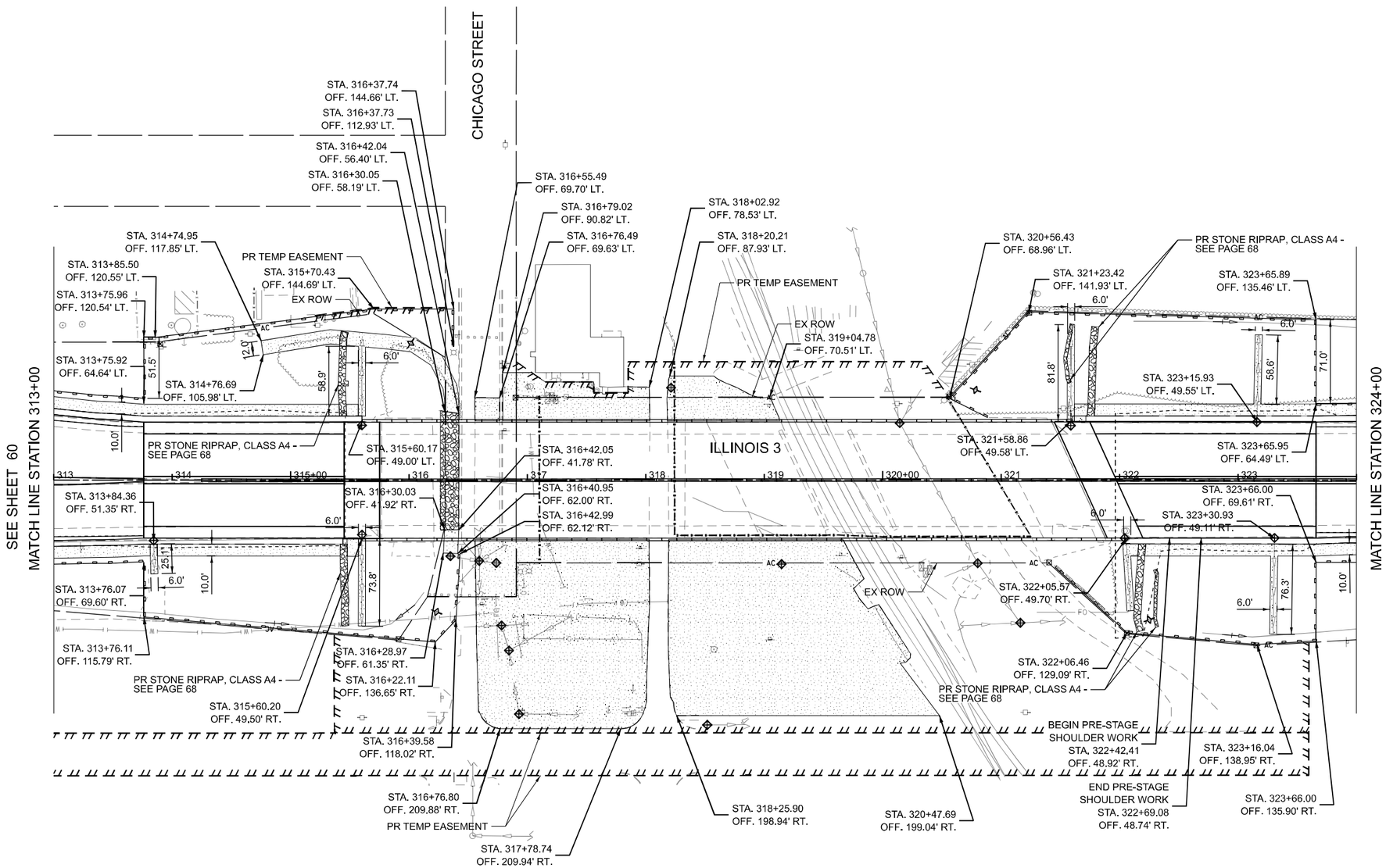

NOTE:
ALL ITEMS SHALL BE CONSTRUCTED AS SHOWN ON STANDARD 280001-07 AND AS DIRECTED BY THE ENGINEER.

MODEL: 50 SCALE PLAN - Plan 2
FILE NAME: pw://hq-pwin101.ae.transyscorp.com:transyscorp-pw1/Documents/Projects_2020/CH401/401200165/Road/303.04 - Standard Sheets/13 - Erosion and Sediment Control/D876N65-sht-eros1.dgn

TERRA ENGINEERING LTD.

USER NAME = mbmcwhorter	DESIGNED - XL	REVISED -	
	DRAWN - XL	REVISED -	
	CHECKED - JRH	REVISED -	
PLOT DATE = 10/15/2025	DATE - 10/15/2025	REVISED -	

STATE OF ILLINOIS
DEPARTMENT OF TRANSPORTATION

ILLINOIS 3 OVER PORT DISTRICT RAILYARD
EROSION AND SEDIMENT CONTROL PLAN

SCALE: 1"=50' | SHEET 2 OF 3 SHEETS | STA. 313+00 TO STA. 324+00

F.A.P RTE.	SECTION	COUNTY	TOTAL SHEETS	SHEET NO.
0002	(103,104)BR-1	MADISON	178	61

CONTRACT NO. 76N65

ILLINOIS | FED. AID PROJECT

LEGEND

- INLET FILTERS (28000510)
- TEMPORARY DITCH CHECKS (28000305)
- PERIMETER EROSION BARRIER (28000400)
- TEMPORARY EROSION CONTROL SEEDING (28000250) TEMPORARY EROSION CONTROL BLANKET (28001100)
- GUARDRAIL AGGREGATE EROSION CONTRL (Z0001002)

0 50 100
SCALE IN FEET

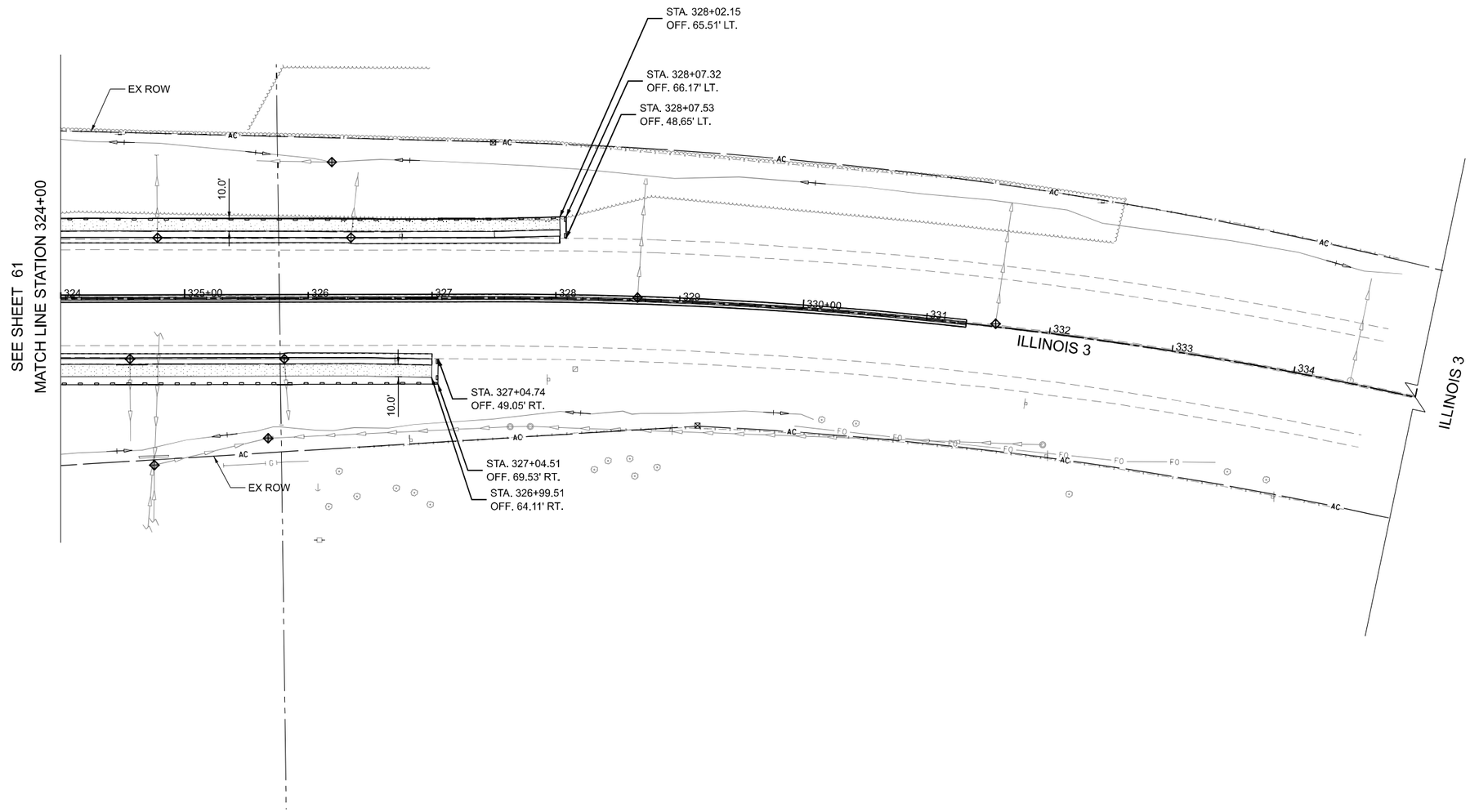

NOTE:
ALL ITEMS SHALL BE CONSTRUCTED AS SHOWN ON STANDARD 280001-07 AND AS DIRECTED BY THE ENGINEER.

MODEL: 50 SCALE PLAN - Plan 3
FILE NAME: pw://hq-pwin01.ze-b.transyscorp.com:transyscorp-pw1/Documents/Projects_2020/CH401/401200165/Road/303.04 - Standard Sheets/13 - Erosion and Sediment Control/D876N65-sht-eros1.dgn

TERRA ENGINEERING LTD.

USER NAME = mbmcwhorter	DESIGNED - XL	REVISED -	
	DRAWN - XL	REVISED -	
	CHECKED - JRH	REVISED -	
PLOT DATE = 10/15/2025	DATE - 10/15/2025	REVISED -	

STATE OF ILLINOIS
DEPARTMENT OF TRANSPORTATION

ILLINOIS 3 OVER PORT DISTRICT RAILYARD
EROSION AND SEDIMENT CONTROL PLAN

SCALE: 1"=50' | SHEET 3 OF 3 SHEETS | STA. 324+00 TO STA. 335+00

F.A.P RTE.	SECTION	COUNTY	TOTAL SHEETS	SHEET NO.
0002	(103,104)BR-1	MADISON	178	62
		CONTRACT NO. 76N65		
		ILLINOIS	FED. AID PROJECT	

MANHOLE REPLACEMENT SCHEDULE

LOCATION		TRENCH BACKFILL	CONCRETE COLLAR	STORM SEWERS CLASS A, TYPE 2			STORM SEWER REMOVAL			MANHOLE, SPECIAL, FRAME AND LID
				12"	15"	24"	12"	15"	24"	
STATION	LT/RT	CU YD	CU YD	FOOT	FOOT	FOOT	FOOT	FOOT	FOOT	EACH
308+40.46	RT	15	0.8	6	22	6	6	22	6	1
	TOTAL	**15**	**0.8**	**6**	**22**	**6**	**6**	**22**	**6**	**1**

DRAINAGE SCHEDULE

LOCATION		REMOVING INLETS	PIPE DRAIN REMOVAL	GRADING AND SHAPING DITCHES	DRAINAGE STRUCTURES TO BE CLEANED	STORM SEWER TO BE CLEANED 12"	STORM SEWER TO BE CLEANED 24"	CONCRETE HEADWALLS FOR PIPE DRAINS
STATION	LT/RT	EACH	FOOT	FOOT	EACH	FOOT	FOOT	EACH
308+18.73	LT					28		
308+20.35	LT				1			
308+40.81	LT				1			
310+72.94	LT	1	40					
311+35.32	LT	1	40					
312+60.09	LT	1	45					
314+75.73	LT			319				
315+47.18	LT							1
315+60.14	LT	1	73					
321+57.86	LT							1
321+58.81	LT	1	85					
323+15.95	LT	1	74					
326+19.18	LT				1		61	
307+94.10	RT					28		
308+15.27	RT					79		
308+40.46	RT				1	43		
308+47.95	RT				1			
310+71.88	RT	1	33					
312+28.35	RT	1	42					
313+84.31	RT	1	28					
315+47.13	RT							1
315+60.21	RT	1	77					
322+02.57	RT							1
322+05.42	RT	1	64					
323.30.90	RT	1	81					
	TOTAL	**12**	**682**	**319**	**5**	**178**	**61**	**4**

PATCHING & CURB SCHEDULE

LOCATION			CLASS C PATHES, TYPE I, 9 INCH	CURB REMOVAL (SPECIAL)
FROM STATION	TO STATION	LT/RT	SQ FT	FOOT
291+00.00	302+00.00			
302+00.00	313+00.00			
313+00.00	324+00.00	RT	18	56
324+00.00	335+00.00			
335+00.00	346+00.00			
346+00.00	357+00.00			
357+00.00	368+00.00			
368+00.00	379+00.00			
379+00.00	390+00.00			
		TOTAL	**18**	**56**

RIPRAP SCHEDULE

LOCATION			STONE RIPRAP, CLASS A4	FILTER FABRIC
FROM STATION	TO STATION	LT/RT	SQ YD	SQ YD
310+20.50	316+42.04	LT	151	458
316+55.49	316+76.49	LT		
316+79.02	318+03.4	LT		
318+17.77	319+13.55	LT		
321+55.84	327+97.73	LT	72	426
310+13.12	316+42.99	RT	122	424
316+55.60	318+02.77	RT		
318+18.85	320+47.69	RT		
322+02.57	326+92.20	RT	70	347
		TOTAL	**415**	**1655**

MODEL: Default
FILE NAME: pw://hq-pwint01.a-e.transyscorp.com:transyscorp-pw1/Documents/Projects_2020/CH401/401200165/Road/303.04 - Standard Sheets/11 - Drainage Plan & Profile/D876N65-sh-drain3.dgn

TERRA ENGINEERING LTD.

USER NAME = mbmcwhorter	DESIGNED - JRH	REVISED -	
	DRAWN - AE	REVISED -	
	CHECKED - TW	REVISED -	
PLOT DATE = 10/15/2025	DATE - 10/15/2025	REVISED -	

STATE OF ILLINOIS
DEPARTMENT OF TRANSPORTATION

ILLINOIS 3 OVER PORT DISTRICT RAILYARD
DRAINAGE AND UTILITY SCHEDULE

SCALE: NONE | SHEET 1 OF 1 SHEETS | STA. TO STA.

F.A.P RTE.	SECTION	COUNTY	TOTAL SHEETS	SHEET NO.
0002	(103,104)BR-1	MADISON	178	63
		CONTRACT NO. 76N65		
		ILLINOIS	FED. AID PROJECT	

LEGEND

- R — REMOVING INLETS
- PIPE DRAIN REMOVAL
- PAVEMENT REMOVAL
- ISLAND PAVEMENT REMOVAL AND REPLACEMENT

0 50 100
SCALE IN FEET

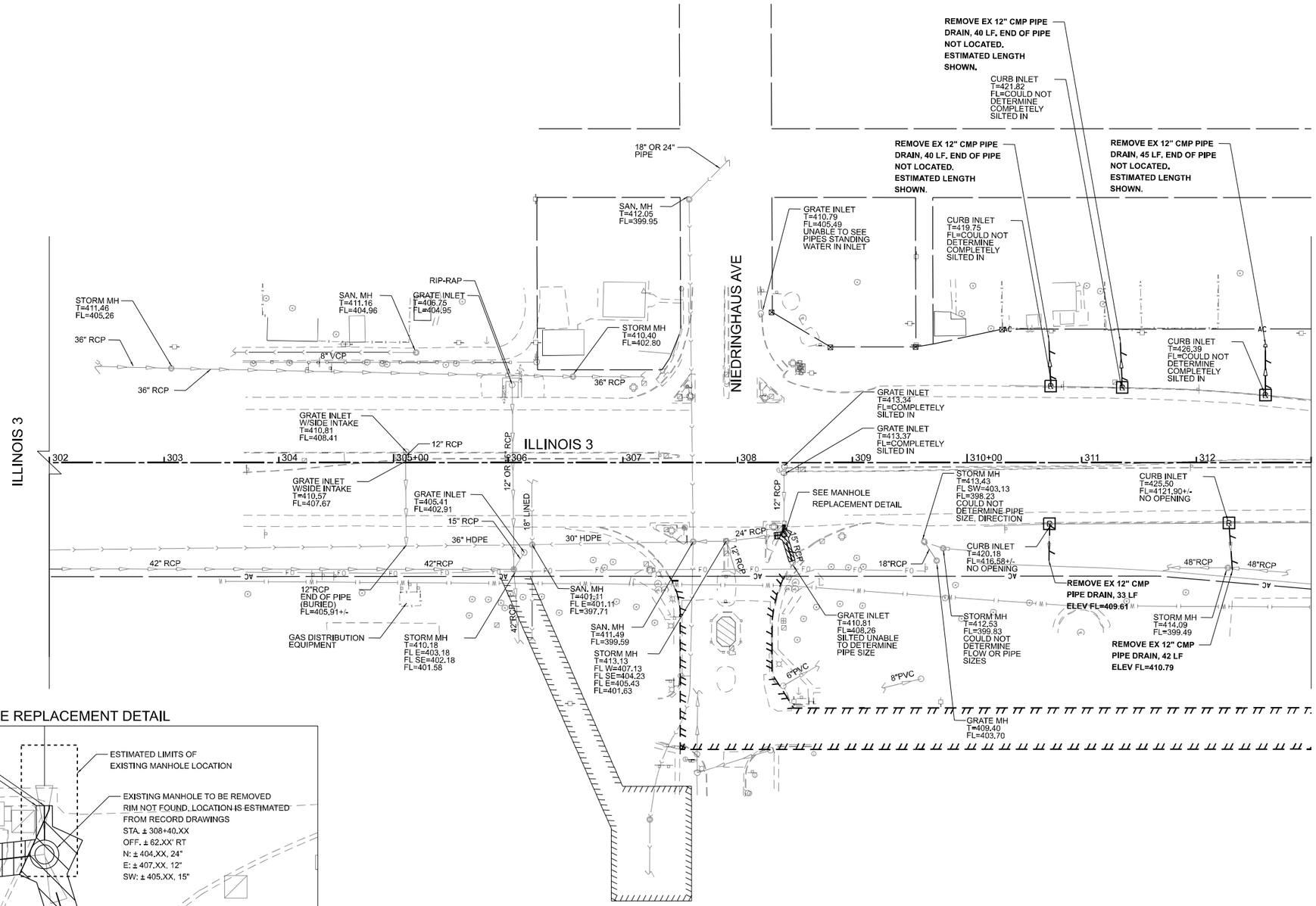

MANHOLE REPLACEMENT DETAIL

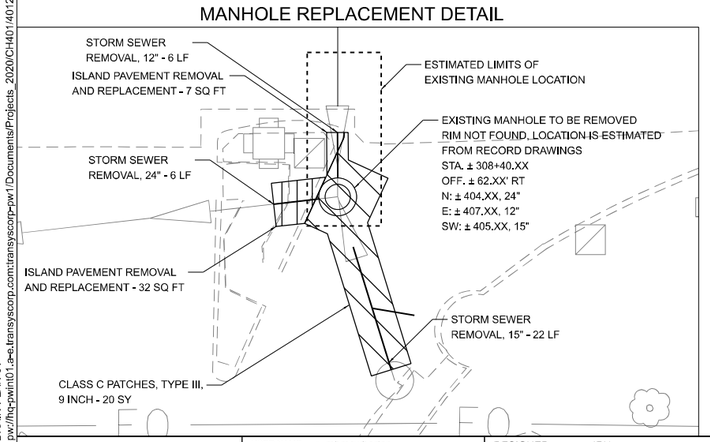

NOTE: REMOVAL AND REPLACEMENT OF EXISTING MANHOLE TO BE PAID AS MANHOLE, SPECIAL, FRAME AND LID.
ELEVATIONS AND MEASUREMENTS ESTIMATED FROM RECORD DRAWING ARE INDICATED AS "##.XX".

MODEL: EX-DRAIN-PLAN-01
FILE NAME: pw://hq-pwin101.a-e-t.transyscorp.com:transyscorp-pw1/Documents/Projects_2020/CH401/401200165/Road/303.04 - Standard Sheets/11 - Drainage Plan & Profile/D876N65-sh-drain2.dgn

TERRA ENGINEERING LTD.

USER NAME = mbmcwhorter	DESIGNED - JRH	REVISED -	
	DRAWN - AE	REVISED -	
	CHECKED - TW	REVISED -	
PLOT DATE = 10/15/2025	DATE - 10/15/2025	REVISED -	

STATE OF ILLINOIS
DEPARTMENT OF TRANSPORTATION

ILLINOIS 3 OVER PORT DISTRICT RAILYARD
EXISTING DRAINAGE REMOVAL PLAN

SCALE: 1"=50' | SHEET 1 OF 3 SHEETS | STA. 302+00 TO STA. 313+00

F.A.P RTE.	SECTION	COUNTY	TOTAL SHEETS	SHEET NO.
0002	(103,104)BR-1	MADISON	178	64

CONTRACT NO. 76N65

ILLINOIS | FED. AID PROJECT

LEGEND

- R — REMOVING INLETS
- PIPE DRAIN REMOVAL
- PAVEMENT REMOVAL
- ISLAND PAVEMENT REMOVAL AND REPLACEMENT

0 50 100
SCALE IN FEET

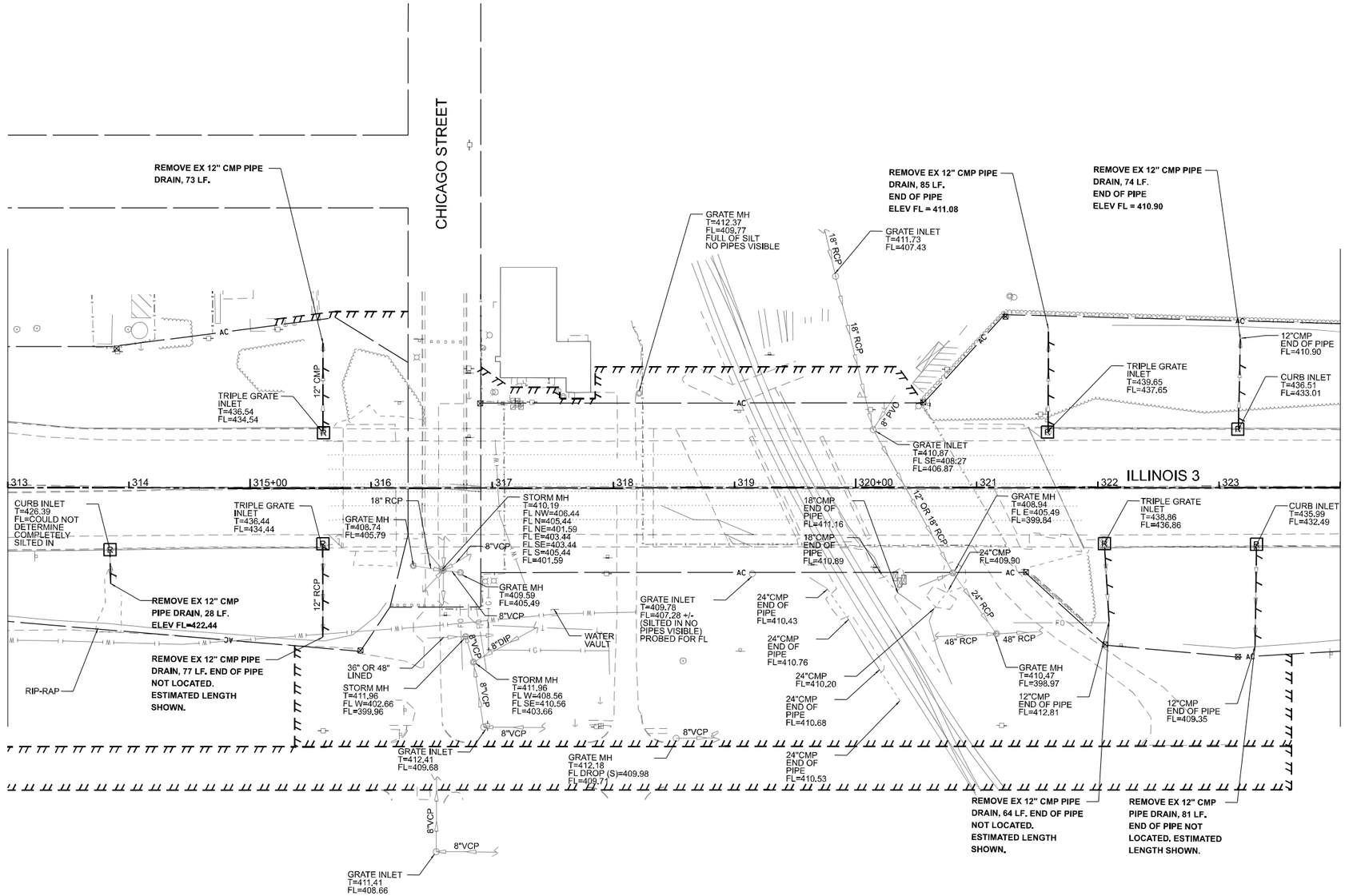

MODEL: EX-DRAIN-PLAN-02
FILE NAME: pw://hq-pwin01.a-e.transyscorp.com:transyscorp-pw1/Documents/Projects_2020/CH401401200165/Road/303.04 - Standard Sheets/11 - Drainage Plan & Profile/D876N65-sh-drain2.dgn

TERRA ENGINEERING LTD.

USER NAME = mbmcwhorter	DESIGNED - JRH	REVISED -	
	DRAWN - AE	REVISED -	
	CHECKED - TW	REVISED -	
PLOT DATE = 10/15/2025	DATE - 10/15/2025	REVISED -	

STATE OF ILLINOIS
DEPARTMENT OF TRANSPORTATION

ILLINOIS 3 OVER PORT DISTRICT RAILYARD
EXISTING DRAINAGE REMOVAL PLAN

SCALE: 1"=50' | SHEET 2 OF 3 SHEETS | STA. 313+00 TO STA. 324+00

F.A.P RTE.	SECTION	COUNTY	TOTAL SHEETS	SHEET NO.
0002	(103,104)BR-1	MADISON	178	65

CONTRACT NO. 76N65

ILLINOIS | FED. AID PROJECT

LEGEND

- R — REMOVING INLETS
- PIPE DRAIN REMOVAL
- PAVEMENT REMOVAL
- ISLAND PAVEMENT REMOVAL AND REPLACEMENT

0 50 100
SCALE IN FEET

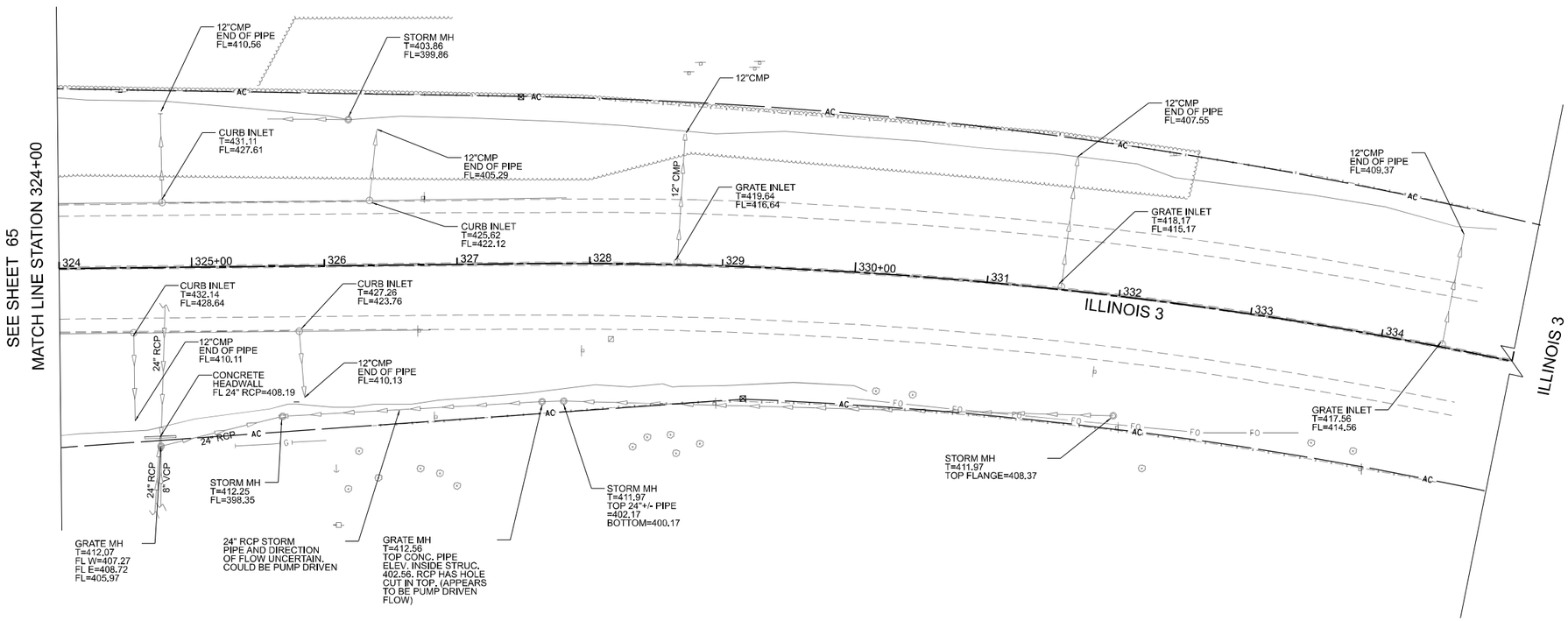

MODEL: EX-DRAIN-PLAN-03
FILE NAME: pw://hq-pwin01.a-e.transyscorp.com:transyscorp-pw1/Documents/Projects_2020/CH401/401200165/Road/303.04 - Standard Sheets/11 - Drainage Plan & Profile/D876N65-sh-drain2.dgn

TERRA ENGINEERING LTD.

USER NAME = mbmcwhorter	DESIGNED - JRH	REVISED -	
	DRAWN - AE	REVISED -	
	CHECKED - TW	REVISED -	
PLOT DATE = 10/15/2025	DATE - 10/15/2025	REVISED -	

STATE OF ILLINOIS
DEPARTMENT OF TRANSPORTATION

ILLINOIS 3 OVER PORT DISTRICT RAILYARD
EXISTING DRAINAGE REMOVAL PLAN

SCALE: 1"=50' | SHEET 3 OF 3 SHEETS | STA. 324+00 TO STA. 335+00

F.A.P RTE.	SECTION	COUNTY	TOTAL SHEETS	SHEET NO.
0002	(103,104)BR-1	MADISON	178	66

CONTRACT NO. 76N65

ILLINOIS | FED. AID PROJECT

0 50 100
SCALE IN FEET

ILLINOIS 3

302 303 304 305+00 306 307 308 309 310+00 311 312

ILLINOIS 3

NIEDRINGHAUS AVE

DRAINAGE STRUCTURE TO BE CLEANED - INLET

STORM SEWER TO BE CLEANED, 12"

EX ROW

STORM SEWER TO BE CLEANED, 12"

DRAINAGE STRUCTURES TO BE CLEANED - INLET

SEE MANHOLE REPLACEMENT DETAIL

STORM SEWER TO BE CLEANED, 12"

DRAINAGE STRUCTURE TO BE CLEANED - INLET

EX ROW

MATCH LINE STATION 313+00
SEE SHEET 68

MANHOLE REPLACEMENT DETAIL

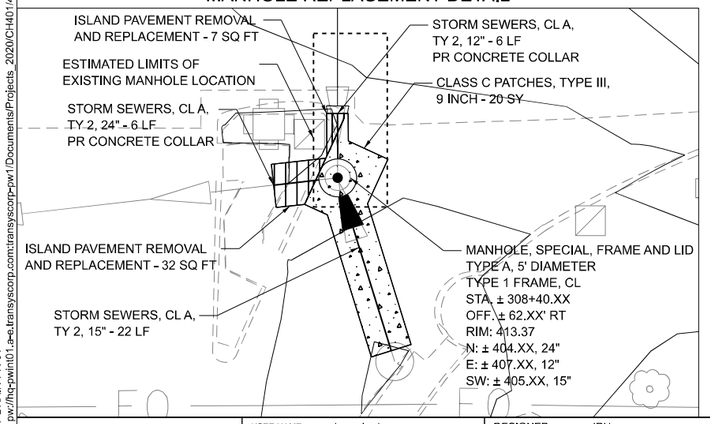

NOTE: REMOVAL AND REPLACEMENT OF EXISTING MANHOLE TO BE PAID AS MANHOLE, SPECIAL, FRAME AND LID.
ELEVATIONS AND MEASUREMENTS ESTIMATED FROM RECORD DRAWING ARE INDICATED AS "##.XX".

MODEL: SHT-DRAIN-PR-01
FILE NAME: pw://hq-pwint01.ae.transyscorp.com:transyscorp-pw1/Documents/Projects_2020/CH401/401200165/Road/303.04 - Standard Sheets/11 - Drainage Plan & Profile/D876N65-sh-drain1.dgn

TERRA ENGINEERING LTD.

USER NAME = mbmcwhorter	DESIGNED - JRH	REVISED -	
	DRAWN - AE	REVISED -	
	CHECKED - TW	REVISED -	
PLOT DATE = 10/15/2025	DATE - 10/15/2025	REVISED -	

STATE OF ILLINOIS
DEPARTMENT OF TRANSPORTATION

ILLINOIS 3 OVER PORT DISTRICT RAILYARD
PROPOSED DRAINAGE AND UTILITIES PLAN

SCALE: 1"=50' | SHEET 1 OF 3 SHEETS | STA. 302+00 TO STA. 313+00

F.A.P RTE.	SECTION	COUNTY	TOTAL SHEETS	SHEET NO.
0002	(103,104)BR-1	MADISON	178	67

CONTRACT NO. 76N65

ILLINOIS | FED. AID PROJECT

PROPOSED IMPROVED SWALE *					
ID	STA	OFF	LT/RT	ELEV	GRADE
A	314+75.73	111.9'	LT	*EX. 412.00*	± 1.0%
B	315+33.49	121.2'	LT	411.42	± 1.0%
C	316+03.50	114.4'	LT	410.71	± 1.5%
D	316+22.97	101.6'	LT	410.36	± 1.5%
E	316+34.48	79.1'	LT	409.99	± 1.5%
F	316+36.12	68.7'	LT	409.83	± 0.6%
G	316+36.05	41.7'	RT	409.15	± 0.6%
H	316+34.96	61.7'	RT	*EX. 409.02*	± 0.6%

** PAID AS GRADING AND SHAPING DITCHES*
± GRADE FOR POSITIVE DRAINAGE

0 50 100
SCALE IN FEET

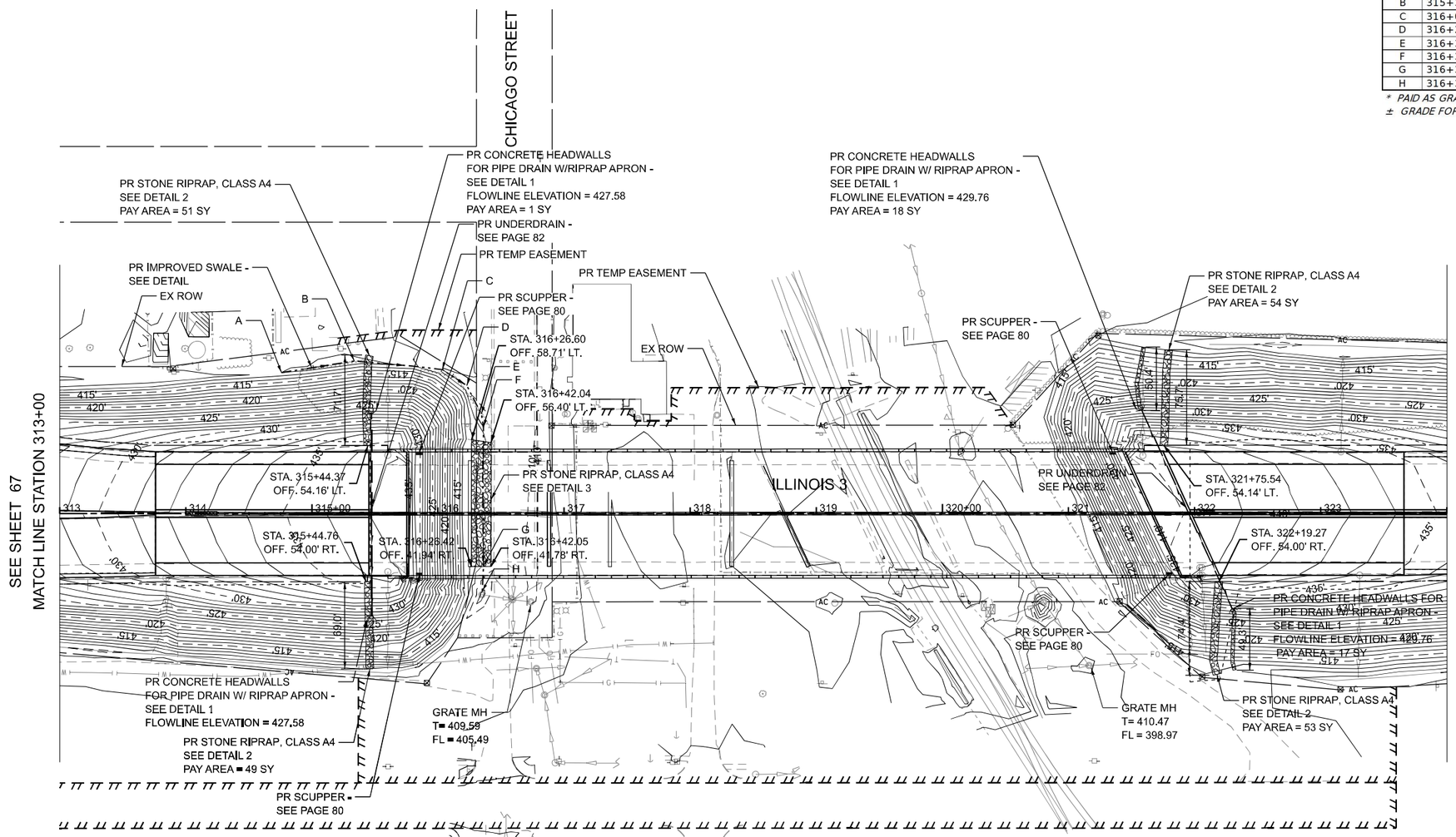

VARIABLES FOR STONE RIPRAP SWALE DETAIL				
ID	W (FT)	H	MATERIAL	PAY AREA (SY)
DETAIL 1	3	3	RR4	36
DETAIL 2	6	6	RR4	207
DETAIL 3	12	8	RR4	172

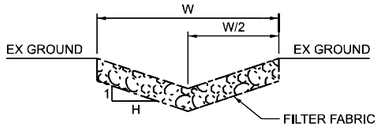

STONE RIPRAP CHANNEL DETAIL

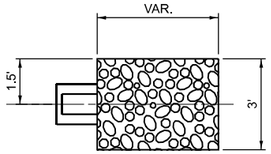

UNDERDRAIN RIPRAP APRON PLAN

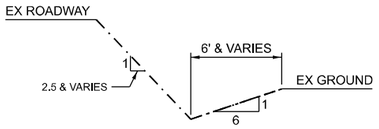

IMPROVED SWALE DETAIL

MODEL: SHT-DRAIN-PR-02
FILE NAME: pw://ho-pwlm01.pw.transyscorp.com:transyscorp-pw1/Documents/Projects_2020/CH401401200165/Road/303.04 - Standard Sheets/11 - Drainage Plan & Profile/D876N65-sh-drain1.dgn

TERRA ENGINEERING LTD.

USER NAME = mbmcwhorter	DESIGNED - JRH	REVISED -
	DRAWN - AE	REVISED -
	CHECKED - TW	REVISED -
PLOT DATE = 10/15/2025	DATE - 10/15/2025	REVISED -

STATE OF ILLINOIS
DEPARTMENT OF TRANSPORTATION

ILLINOIS 3 OVER PORT DISTRICT RAILYARD
PROPOSED DRAINAGE AND UTILITIES PLAN

SCALE: 1"=50' | SHEET 2 OF 3 SHEETS | STA. 313+00 TO STA. 324+00

F.A.P RTE.	SECTION	COUNTY	TOTAL SHEETS	SHEET NO.
0002	(103,104)BR-1	MADISON	178	68
		CONTRACT NO. 76N65		
		ILLINOIS	FED. AID PROJECT	

0 50 100
SCALE IN FEET

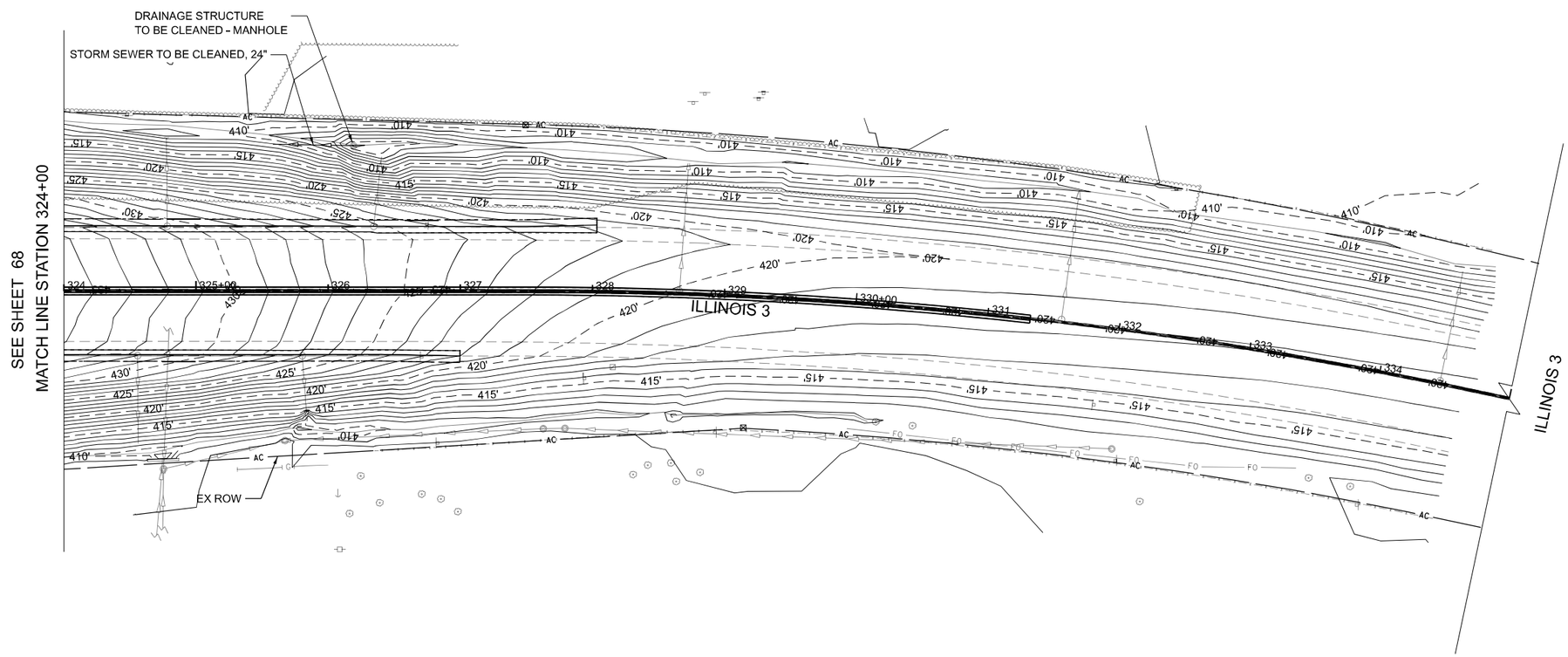

MODEL: SHT-DRAIN-PR-03
FILE NAME: pw://hq-pwin01.s-e.transyscorp.com:transyscorp-pw1/Documents/Projects_2020/CH401/401200165/Road/303.04 - Standard Sheets/11 - Drainage Plan & Profile/D876N65-sh-drain1.dgn

TERRA ENGINEERING LTD.

USER NAME = mbmcwhorter	DESIGNED - JRH	REVISED -	
	DRAWN - AE	REVISED -	
	CHECKED - TW	REVISED -	
PLOT DATE = 10/15/2025	DATE - 10/15/2025	REVISED -	

STATE OF ILLINOIS
DEPARTMENT OF TRANSPORTATION

ILLINOIS 3 OVER PORT DISTRICT RAILYARD
PROPOSED DRAINAGE AND UTILITIES PLAN

SCALE: 1"=50' | SHEET 3 OF 3 SHEETS | STA. 324+00 TO STA. 335+00

F.A.P RTE.	SECTION	COUNTY	TOTAL SHEETS	SHEET NO.
0002	(103,104)BR-1	MADISON	178	69

CONTRACT NO. 76N65

ILLINOIS | FED. AID PROJECT

PAVEMENT MARKING SCHEDULE

LOCATION		PREF THERMO PVMT MRK - L & S	PREF THERMO PVMT MRK - LINE 6"			PREF THERMO PVMT MRK - LINE 12"	PREF THERMO PVMT MRK - LINE 24"	MOD URETHANE PVMT MRK - LINE 6"			RAISED REFLECT PVMT MRK
		SYMBOLS	WHITE - SOLID LINE	YELLOW - SOLID LINE	WHITE - SKIP DASH LINE	WHITE - SOLID LINE	WHITE - SOLID LINE	WHITE - SOLID LINE	YELLOW - SOLID LINE	WHITE - SKIP DASH	
FROM STATION	TO STATION	SQ FT	FOOT	FOOT	FOOT	FOOT	FOOT	FOOT	FOOT	FOOT	EACH
291+00.00	302+00.00		535	535	274						28
302+00.00	313+00.00	96	1961	1479	721	43	96				73
313+00.00	324+00.00		221	220	110			1980	1980	990	11
324+00.00	335+00.00		2605	1867	935						94
335+00.00	346+00.00		1108	1101	553						56
346+00.00	357+00.00		1100	1100	550						55
357+00.00	368+00.00		1096	1100	549						55
368+00.00	379+00.00		1095	1100	549						55
379+00.00	390+00.00		16	16	8						1
SUB-TOTAL		**96**	**9,737**	**8,518**	**4,249**	**43**	**96**	**1,980**	**1,980**	**990**	**428**
PAY-ITEM TOTAL		**96**	**22,504**			**43**	**96**	**4,950**			**428**

PAVEMENT MARKING REMOVAL SCHEDULE

LOCATION		PVMT MRK REMOVAL - WATER BLASTING			RAISED PVMT MRK REMOVAL
		4" LINE	24" LINE	LETTERS AND SYMBOLS	
FROM STATION	TO STATION	SQ FT			EACH
291+00.00	302+00.00	365			28
302+00.00	313+00.00	1102	192	94	73
313+00.00	324+00.00	1543			61
324+00.00	335+00.00	1150			94
335+00.00	346+00.00	755			56
346+00.00	357+00.00	752			55
357+00.00	368+00.00	751			55
368+00.00	379+00.00	750			55
379+00.00	390+00.00	11			1
SUB-TOTAL		**7,179**	**192**	**94**	**478**
PAY-ITEM TOTAL		**7,465**			**478**

SIGN REMOVAL SCHEDULE

LOCATION			REMOVE AND RELOCATE SIGN PANEL ASSEMBLY-TYPE A	REMOVE AND RELOCATE SIGN PANEL ASSEMBLY-TYPE B
STATION	OFFSET		EACH	EACH
303+71.73	4.99	RT	1	
303+88.96	60.22	RT	1	
308+50.64	5.98	RT	1	
310+33.94	57.41	RT	1	
310+83.16	66.95	LT	1	
311+95.76	0.92	RT	1	
312+01.32	63.92	LT	1	
326+70.78	49.62	RT	1	
326+74.76	50.53	LT	1	
313+23.46	56.53	RT		1
321+57.60	55.36	LT		1
TOTAL			**9**	**2**

MODEL: Default
FILE NAME: pw://hq-pwint01.ae.transyscorp.com:transyscorp-pw1/Documents/Projects_2020/CH401/401200165/Road/303.04 - Standard Sheets/15 - PMK & Signing/D876N65-sht-schedule2.dgn

TERRA ENGINEERING LTD.

USER NAME = mbmcwhorter	DESIGNED - TLH	REVISED -	
	DRAWN - TLH	REVISED -	
	CHECKED - NS	REVISED -	
PLOT DATE = 10/15/2025	DATE - 10/15/2025	REVISED -	

STATE OF ILLINOIS
DEPARTMENT OF TRANSPORTATION

ILLINOIS 3 OVER PORT DISTRICT RAILYARD
PAVEMENT MARKING AND SIGNING PLAN SCHEDULE

SCALE: NONE | SHEET 1 OF 6 SHEETS | STA. TO STA.

F.A.P RTE.	SECTION	COUNTY	TOTAL SHEETS	SHEET NO.
0002	(103,104)BR-1	MADISON	178	70

CONTRACT NO. 76N65

ILLINOIS | FED. AID PROJECT

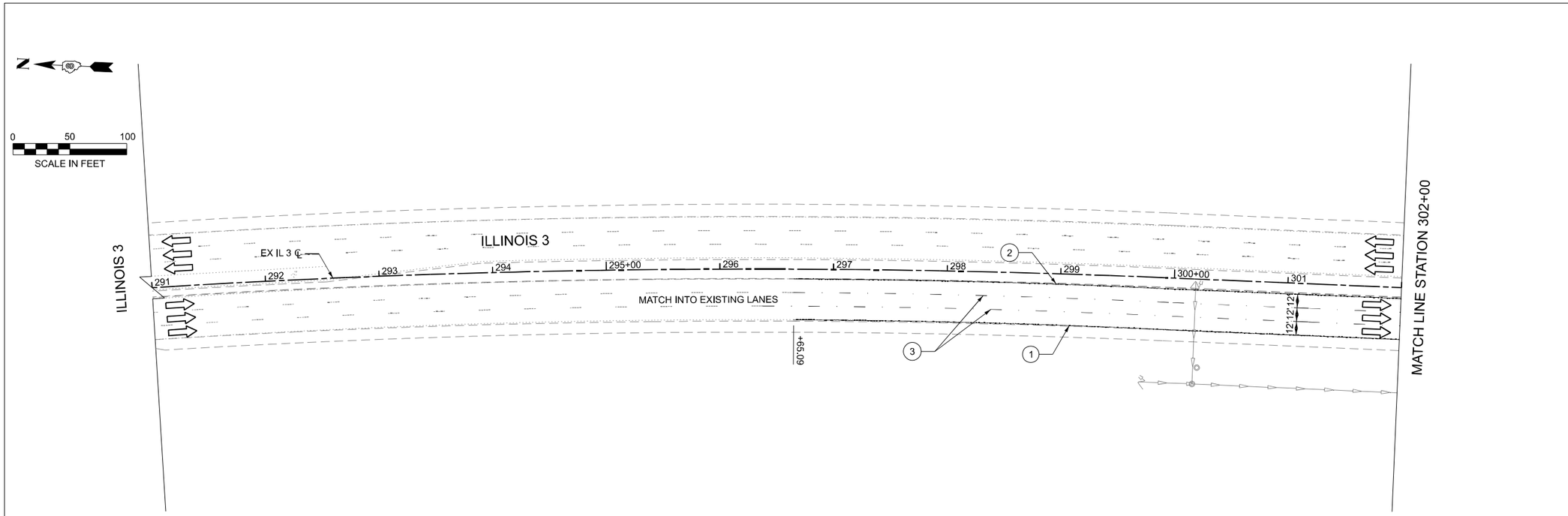

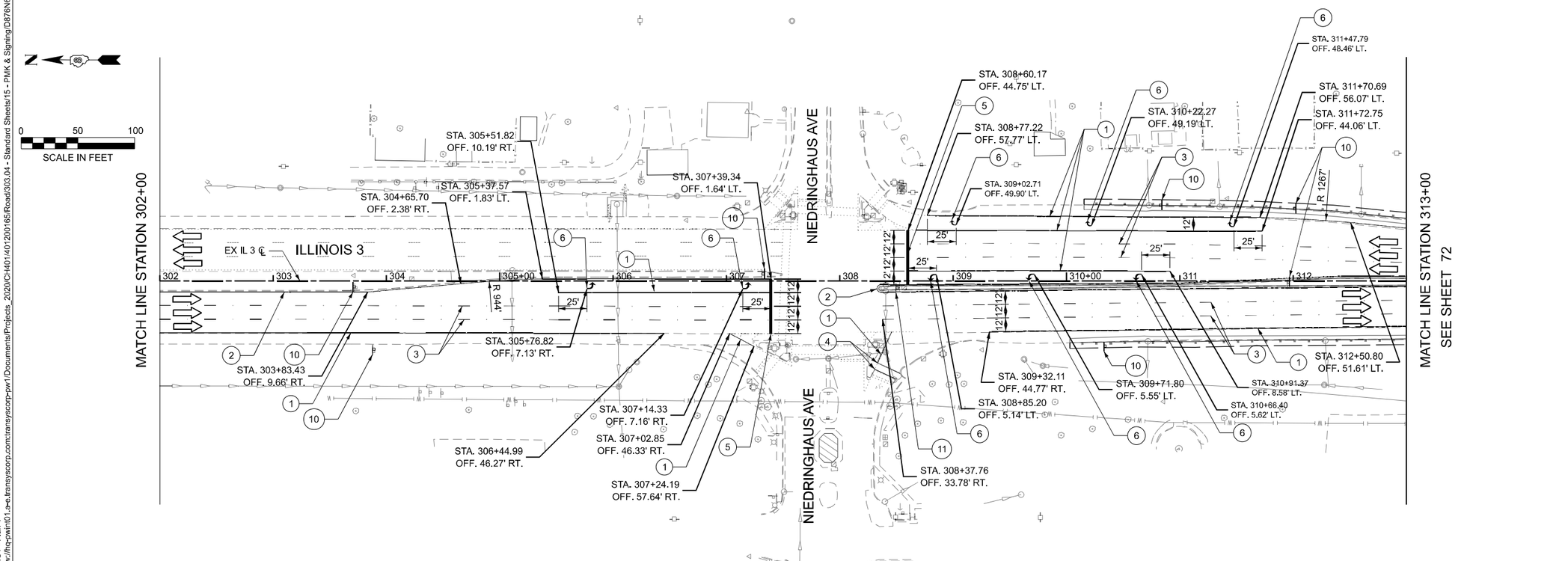

LEGEND

1. THERMOPLASTIC PAVEMENT MARKING - LINE 6" - WHITE
2. THERMOPLASTIC PAVEMENT MARKING - LINE 6" - YELLOW
3. THERMOPLASTIC PAVEMENT MARKING - LINE 6" - WHITE, 10' DASH 30' SKIP W/ RAISED REFLECTIVE PAVEMENT MARKER @ 40' SPACING
4. THERMOPLASTIC PAVEMENT MARKING - LINE 12" - WHITE
5. THERMOPLASTIC PAVEMENT MARKING - LINE 24" - WHITE
6. THERMOPLASTIC PAVEMENT MARKING - LETTER AND SYMBOLS
7. MODIFIED URETHANE PAVEMENT MARKING - LINE 6" - WHITE
8. MODIFIED URETHANE PAVEMENT MARKING - LINE 6" - YELLOW
9. MODIFIED URETHANE PAVEMENT MARKING - LINE 6" - WHITE, 10' DASH 30' SKIP
10. REMOVE AND RELOCATE SIGN PANEL ASSEMBLY - TYPE A
11. REMOVE AND RELOCATESIGN PANEL ASSEMBLY - TYPE B
12. BARRIER WALL REFLECTORS, TYPE C

MODEL: IL3_MOT - Plan 1
FILE NAME: pw://hq-pwint01.ae.transyscorp.com:transyscorp-pw1/Documents/Projects_2020/CH401/401200165/Road/303.04 - Standard Sheets/15 - PMK & Signing/D876N65-sht-pmk.dgn

TERRA ENGINEERING LTD.

USER NAME = mbmcwhorter	DESIGNED - TLH	REVISED -	
	DRAWN - TLH	REVISED -	
	CHECKED - NS	REVISED -	
PLOT DATE = 10/15/2025	DATE - 10/15/2025	REVISED -	

STATE OF ILLINOIS
DEPARTMENT OF TRANSPORTATION

ILLINOIS 3 OVER PORT DISTRICT RAILYARD
PAVEMENT MARKING AND SIGNING PLAN

SCALE: 1"=50' | SHEET 2 OF 6 SHEETS | STA. 291+00 TO STA. 313+00

F.A.P RTE.	SECTION	COUNTY	TOTAL SHEETS	SHEET NO.
0002	(103,104)BR-1	MADISON	178	71

CONTRACT NO. 76N65

ILLINOIS FED. AID PROJECT

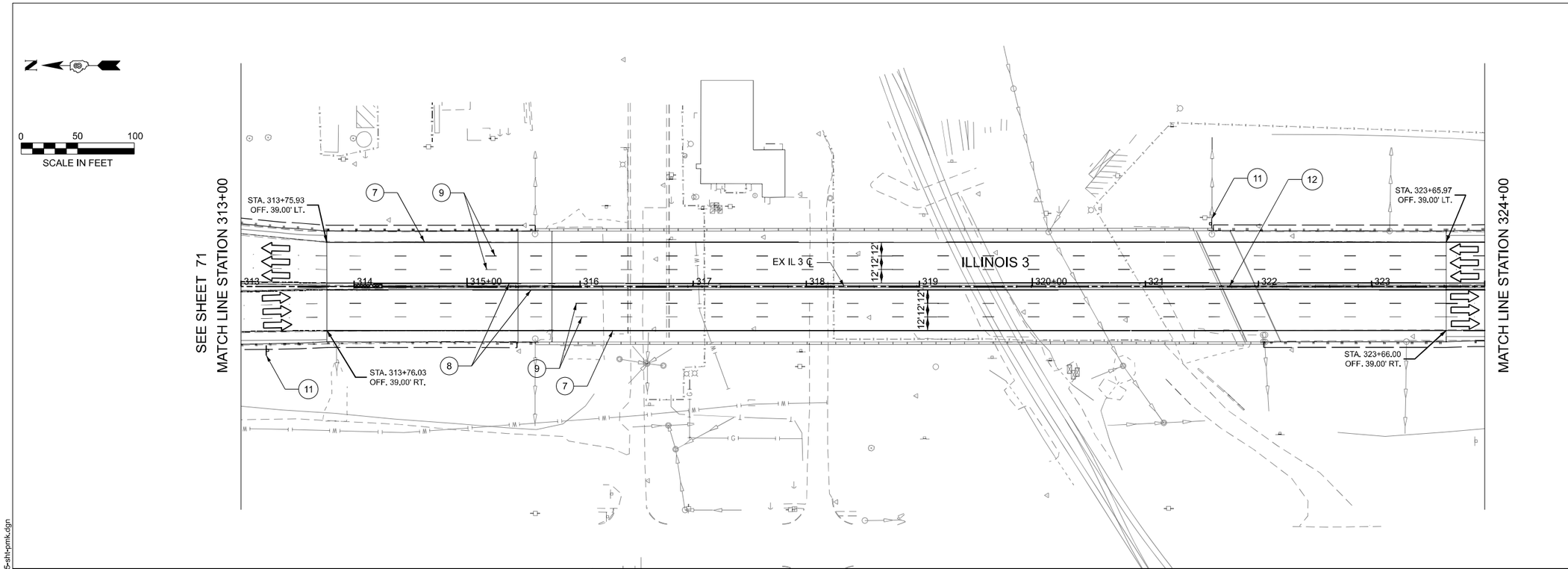

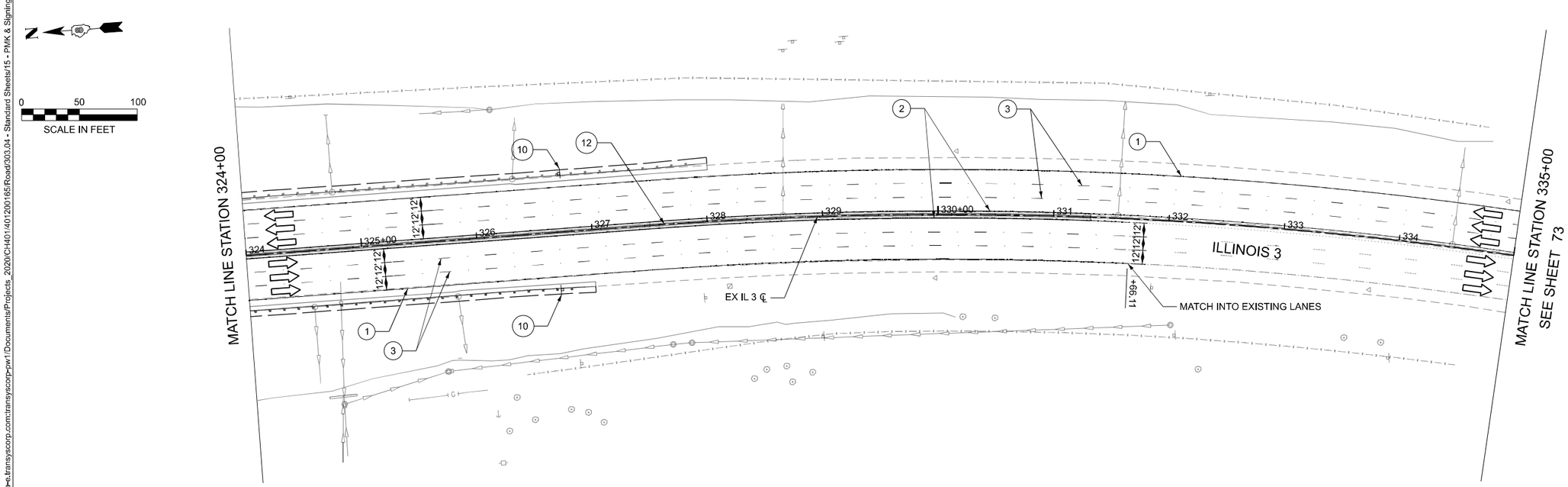

LEGEND

1. THERMOPLASTIC PAVEMENT MARKING - LINE 6" - WHITE
2. THERMOPLASTIC PAVEMENT MARKING - LINE 6" - YELLOW
3. THERMOPLASTIC PAVEMENT MARKING - LINE 6" - WHITE, 10' DASH 30' SKIP W/ RAISED REFLECTIVE PAVEMENT MARKER @ 40' SPACING
4. THERMOPLASTIC PAVEMENT MARKING - LINE 12" - WHITE
5. THERMOPLASTIC PAVEMENT MARKING - LINE 24" - WHITE
6. THERMOPLASTIC PAVEMENT MARKING - LETTER AND SYMBOLS
7. MODIFIED URETHANE PAVEMENT MARKING - LINE 6" - WHITE
8. MODIFIED URETHANE PAVEMENT MARKING - LINE 6" - YELLOW
9. MODIFIED URETHANE PAVEMENT MARKING - LINE 6" - WHITE, 10' DASH 30' SKIP
10. REMOVE AND RELOCATE SIGN PANEL ASSEMBLY - TYPE A
11. REMOVE AND RELOCATESIGN PANEL ASSEMBLY - TYPE B
12. BARRIER WALL REFLECTORS, TYPE C

MODEL: IL3_MOT - Plan 3
FILE NAME: pw://hq-pwint01.ae.transyscorp.com:transyscorp-pw1/Documents/Projects_2020/CH401/401200165/Road/303.04 - Standard Sheets/15 - PMK & Signing/D876N65-sht-pmk.dgn

TERRA ENGINEERING LTD.

USER NAME = mbmcwhorter	DESIGNED - TLH	REVISED -	
	DRAWN - TLH	REVISED -	
	CHECKED - NS	REVISED -	
PLOT DATE = 10/15/2025	DATE - 10/15/2025	REVISED -	

STATE OF ILLINOIS
DEPARTMENT OF TRANSPORTATION

ILLINOIS 3 OVER PORT DISTRICT RAILYARD
PAVEMENT MARKING AND SIGNING PLAN

SCALE: 1"=50' | SHEET 3 OF 6 SHEETS | STA. 313+00 TO STA. 335+00

F.A.P RTE.	SECTION	COUNTY	TOTAL SHEETS	SHEET NO.
0002	(103,104)BR-1	MADISON	178	72

CONTRACT NO. 76N65

ILLINOIS | FED. AID PROJECT

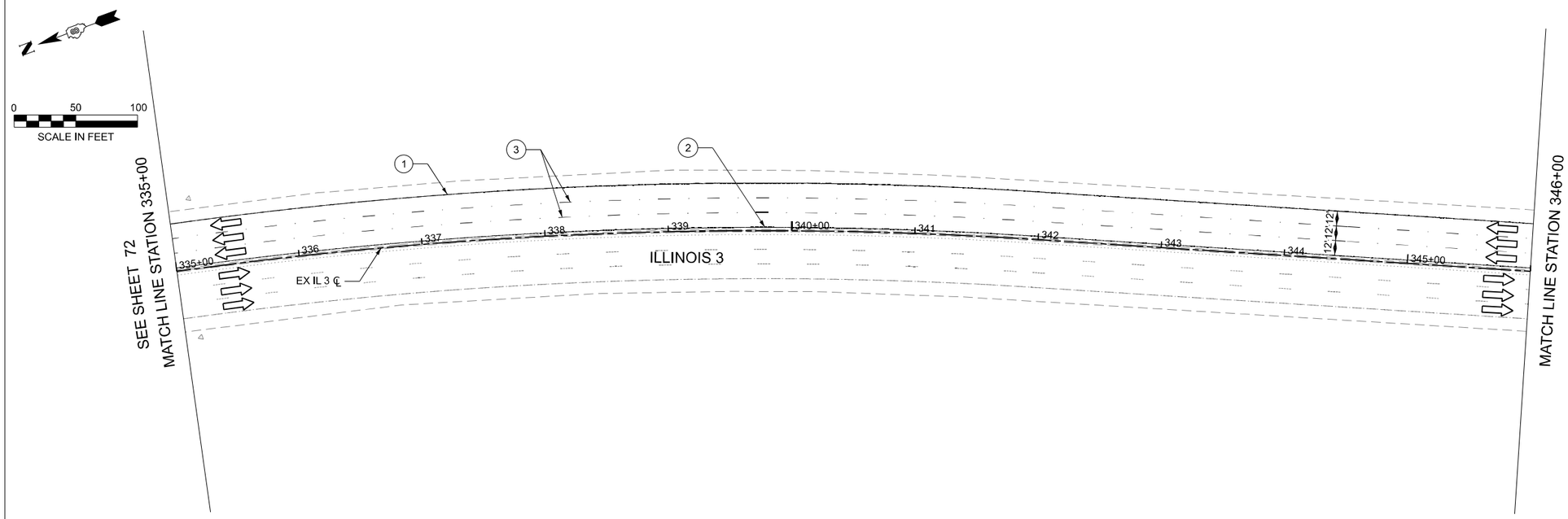

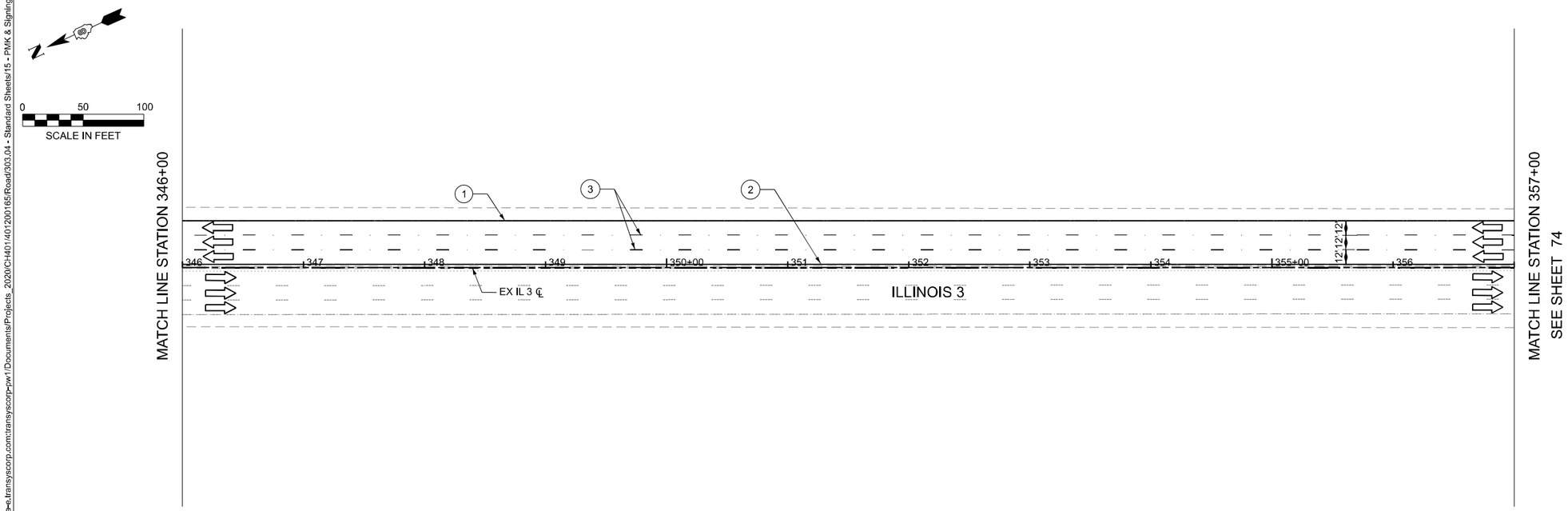

LEGEND

1. THERMOPLASTIC PAVEMENT MARKING - LINE 6" - WHITE
2. THERMOPLASTIC PAVEMENT MARKING - LINE 6" - YELLOW
3. THERMOPLASTIC PAVEMENT MARKING - LINE 6" - WHITE, 10' DASH 30' SKIP W/ RAISED REFLECTIVE PAVEMENT MARKER @ 40' SPACING
4. THERMOPLASTIC PAVEMENT MARKING - LINE 12" - WHITE
5. THERMOPLASTIC PAVEMENT MARKING - LINE 24" - WHITE
6. THERMOPLASTIC PAVEMENT MARKING - LETTER AND SYMBOLS
7. MODIFIED URETHANE PAVEMENT MARKING - LINE 6" - WHITE
8. MODIFIED URETHANE PAVEMENT MARKING - LINE 6" - YELLOW
9. MODIFIED URETHANE PAVEMENT MARKING - LINE 6" - WHITE, 10' DASH 30' SKIP
10. REMOVE AND RELOCATE SIGN PANEL ASSEMBLY - TYPE A
11. REMOVE AND RELOCATESIGN PANEL ASSEMBLY - TYPE B
12. BARRIER WALL REFLECTORS, TYPE C

MODEL: IL3_MOT - Plan 5
FILE NAME: pw://hq-pwint01.ae.transyscorp.com:transyscorp-pw1/Documents/Projects_2020/CH401/401200165/Road/303.04 - Standard Sheets/15 - PMK & Signing/D876N65-sht-pmk.dgn

TERRA ENGINEERING LTD.

USER NAME = mbmcwhorter	DESIGNED - TLH	REVISED -	
	DRAWN - TLH	REVISED -	
	CHECKED - NS	REVISED -	
PLOT DATE = 10/15/2025	DATE - 10/15/2025	REVISED -	

STATE OF ILLINOIS
DEPARTMENT OF TRANSPORTATION

ILLINOIS 3 OVER PORT DISTRICT RAILYARD
PAVEMENT MARKING AND SIGNING PLAN

SCALE: 1"=50' | SHEET 4 OF 6 SHEETS | STA. 335+00 TO STA. 357+00

F.A.P RTE.	SECTION	COUNTY	TOTAL SHEETS	SHEET NO.
0002	(103,104)BR-1	MADISON	178	73

CONTRACT NO. 76N65

ILLINOIS | FED. AID PROJECT

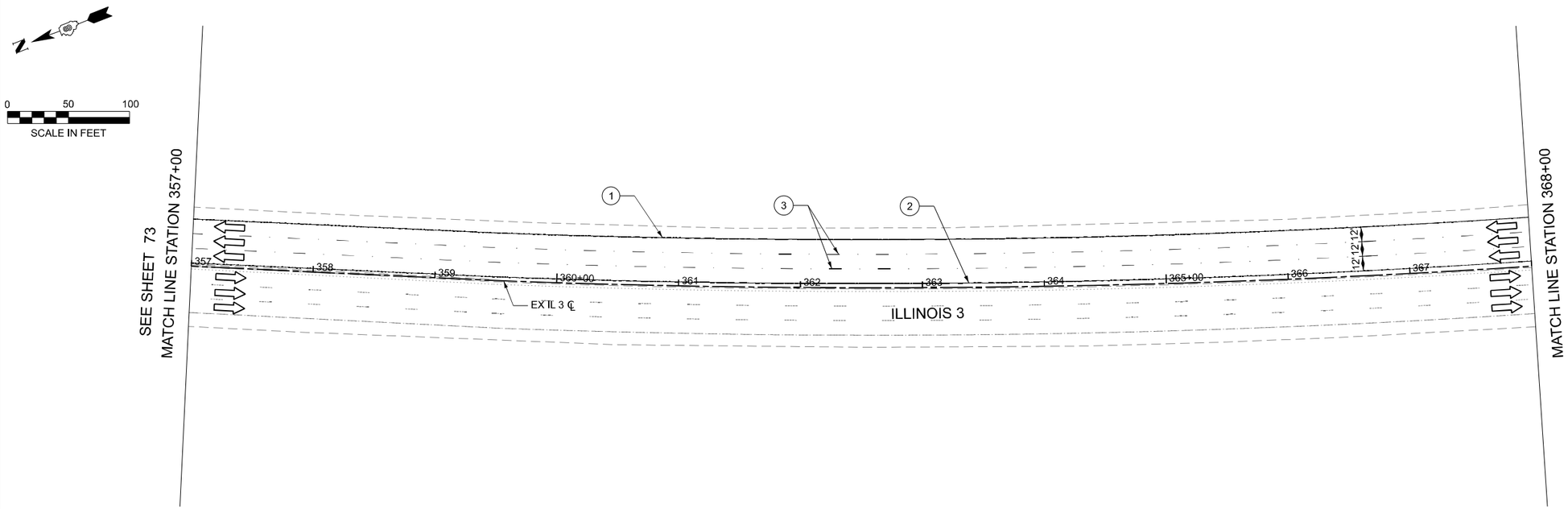

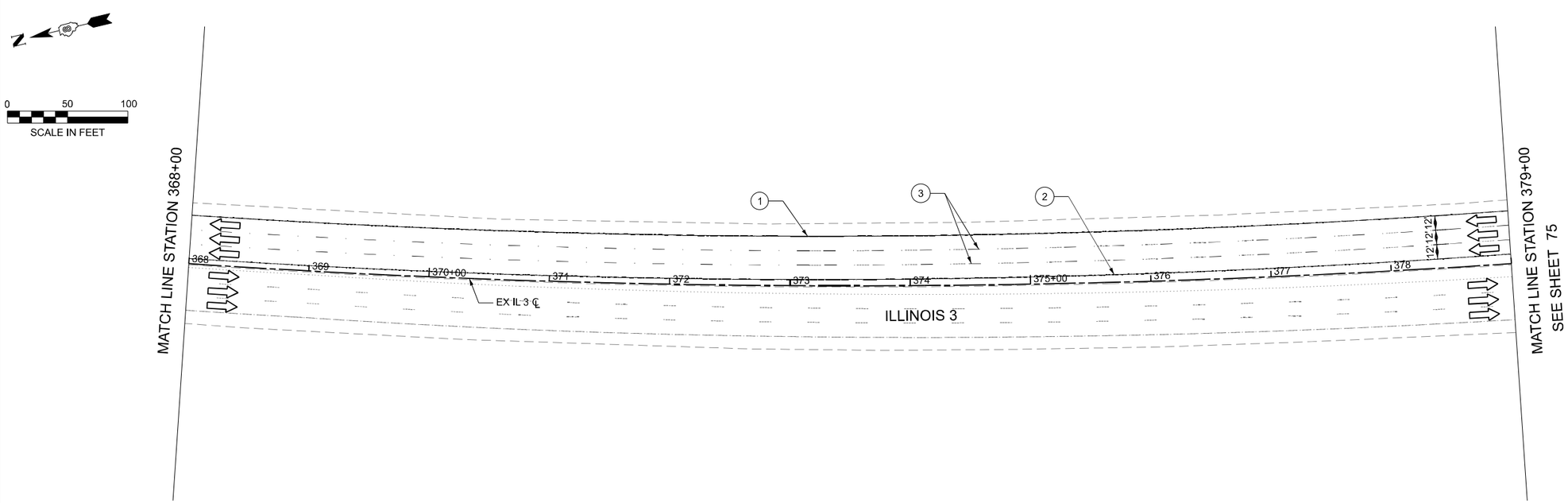

LEGEND

1. THERMOPLASTIC PAVEMENT MARKING - LINE 6" - WHITE
2. THERMOPLASTIC PAVEMENT MARKING - LINE 6" - YELLOW
3. THERMOPLASTIC PAVEMENT MARKING - LINE 6" - WHITE, 10' DASH 30' SKIP W/ RAISED REFLECTIVE PAVEMENT MARKER @ 40' SPACING
4. THERMOPLASTIC PAVEMENT MARKING - LINE 12" - WHITE
5. THERMOPLASTIC PAVEMENT MARKING - LINE 24" - WHITE
6. THERMOPLASTIC PAVEMENT MARKING - LETTER AND SYMBOLS
7. MODIFIED URETHANE PAVEMENT MARKING - LINE 6" - WHITE
8. MODIFIED URETHANE PAVEMENT MARKING - LINE 6" - YELLOW
9. MODIFIED URETHANE PAVEMENT MARKING - LINE 6" - WHITE, 10' DASH 30' SKIP
10. REMOVE AND RELOCATE SIGN PANEL ASSEMBLY - TYPE A
11. REMOVE AND RELOCATESIGN PANEL ASSEMBLY - TYPE B
12. BARRIER WALL REFLECTORS, TYPE C

MODEL: IL3_MOT - Plan 7
FILE NAME: pw://hq-pwint01.ae.transyscorp.com:transyscorp-pw1/Documents/Projects_2020/CH401/401200165/Road/303.04 - Standard Sheets/15 - PMK & Signing/D876N65-sht-pmk.dgn

TERRA ENGINEERING LTD.

USER NAME = mbmcwhorter	DESIGNED - TLH	REVISED -	
	DRAWN - TLH	REVISED -	
	CHECKED - NS	REVISED -	
PLOT DATE = 10/15/2025	DATE - 10/15/2025	REVISED -	

STATE OF ILLINOIS
DEPARTMENT OF TRANSPORTATION

ILLINOIS 3 OVER PORT DISTRICT RAILYARD
PAVEMENT MARKING AND SIGNING PLAN

SCALE: 1"=50' | SHEET 5 OF 6 SHEETS | STA. 357+00 TO STA. 379+00

F.A.P RTE.	SECTION	COUNTY	TOTAL SHEETS	SHEET NO.
0002	(103,104)BR-1	MADISON	178	74
		CONTRACT NO. 76N65		
		ILLINOIS	FED. AID PROJECT	

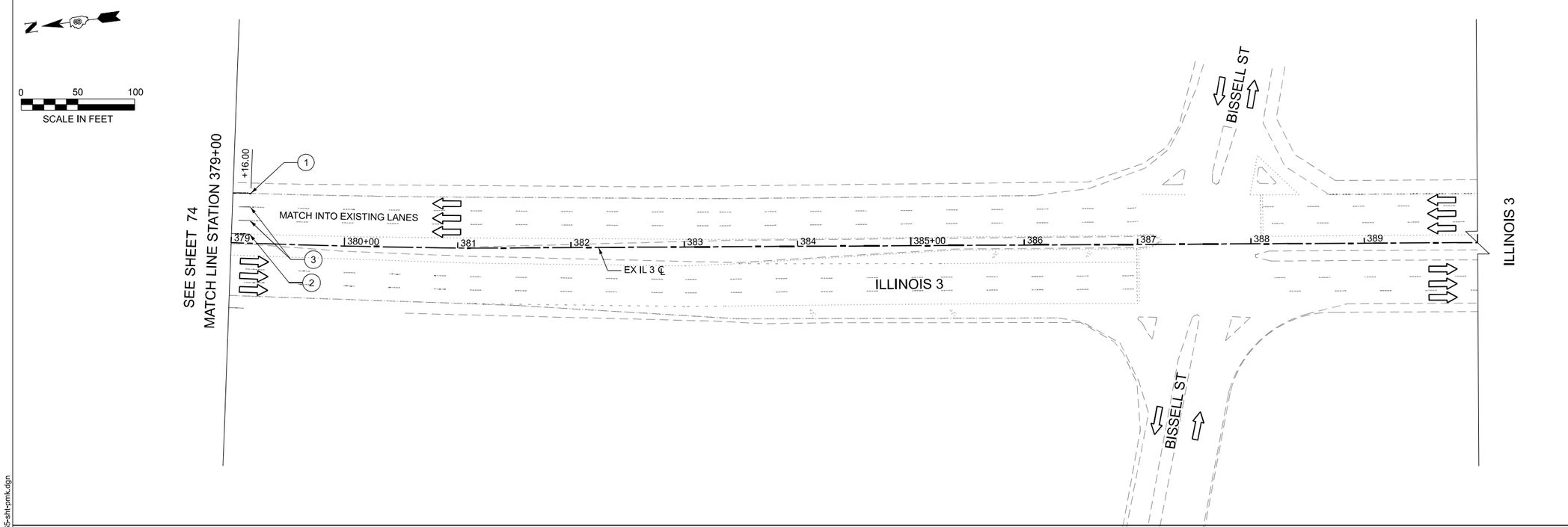

LEGEND

1. THERMOPLASTIC PAVEMENT MARKING - LINE 6" - WHITE
2. THERMOPLASTIC PAVEMENT MARKING - LINE 6" - YELLOW
3. THERMOPLASTIC PAVEMENT MARKING - LINE 6" - WHITE, 10' DASH 30' SKIP W/ RAISED REFLECTIVE PAVEMENT MARKER @ 40' SPACING
4. THERMOPLASTIC PAVEMENT MARKING - LINE 12" - WHITE
5. THERMOPLASTIC PAVEMENT MARKING - LINE 24" - WHITE
6. THERMOPLASTIC PAVEMENT MARKING - LETTER AND SYMBOLS
7. MODIFIED URETHANE PAVEMENT MARKING - LINE 6" - WHITE
8. MODIFIED URETHANE PAVEMENT MARKING - LINE 6" - YELLOW
9. MODIFIED URETHANE PAVEMENT MARKING - LINE 6" - WHITE, 10' DASH 30' SKIP
10. REMOVE AND RELOCATE SIGN PANEL ASSEMBLY - TYPE A
11. REMOVE AND RELOCATESIGN PANEL ASSEMBLY - TYPE B
12. BARRIER WALL REFLECTORS, TYPE C

MODEL: IL3_MOT - Plan 9
FILE NAME: pw://hq-pwint01.ae.transyscorp.com:transyscorp-pw1/Documents/Projects_2020/CH401/401200165/Road/303.04 - Standard Sheets/15 - PMK & Signing/D876N65-sht-pmk.dgn

TERRA ENGINEERING LTD.

USER NAME = mbmcwhorter	DESIGNED - TLH	REVISED -	
	DRAWN - TLH	REVISED -	
	CHECKED - NS	REVISED -	
PLOT DATE = 10/15/2025	DATE - 10/15/2025	REVISED -	

STATE OF ILLINOIS
DEPARTMENT OF TRANSPORTATION

ILLINOIS 3 OVER PORT DISTRICT RAILYARD
PAVEMENT MARKING AND SIGNING PLAN

SCALE: 1"=50' | SHEET 6 OF 6 SHEETS | STA. 379+00 TO STA. 390+00

F.A.P RTE.	SECTION	COUNTY	TOTAL SHEETS	SHEET NO.
0002	(103,104)BR-1	MADISON	178	75

CONTRACT NO. 76N65

ILLINOIS | FED. AID PROJECT

GENERAL NOTES

1. ALL LANDSCAPING PRODUCTS SHALL BE SPECIFICALLY RECOMMENDED BY THE MANUFACTURER FOR THE USE SPECIFIED IN THE LANDSCAPING PLAN, PRIOR TO APPROVAL AND USE OF THE PRODUCT. THE CONTRACTOR SHALL SUBMIT TO THE ENGINEER A NOTARIZED CERTIFICATION BY THE PRODUCER STATING THE INTENDED USE OF THE PRODUCT AND THAT THE PHYSICAL PROPERTIES REQUIRED FOR THIS APPLICATION ARE MET OR EXCEEDED. THE CONTRACTOR SHALL PROVIDE MANUFACTURER RECOMMENDED INSTALLATION PROCEDURE TO FACILITATE THE ENGINEER IN CONSTRUCTION INSPECTION.

2. ALL SOIL DISTURBED FOR ANY REASON SHALL BE PERMANENTLY SEEDED AS DIRECTED BY THE ENGINEER. ALL AREAS DISTURBED BY THE CONTRACTOR OUTSIDE THE PROPOSED CONSTRUCTION LIMITS SHALL BE SEEDED AT THE CONTRACTORS EXPENSE.

3. FINAL SEEDING SHALL BE PERFORMED AS SOON AS POSSIBLE.

4. THE FOLLOWING CONSTANTS WERE USED IN THE CALCULATION OF QUANTITIES FOR THIS PROJECT:

NITROGEN FERTILIZER NUTRIENT	90 LBS/ACRE
PHOSPHORUS FERTILIZER NUTRIENT	90 LBS/ACRE
POTASSIUM FERTILIZER NUTRIENT	90 LBS/ACRE
GRANULAR MATERIALS	2.05 TONS/CU. YD.

LANDSCAPING SCHEDULE

LOCATION			SEEDING, CLASS 2A	NITROGEN FERTILIZER NUTRIENT	PHOSPHORUS FERTILIZER NUTRIENT	POTASSIUM FERTILIZER NUTRIENT	EROSION CONTROL BLANKET
FROM STATION	TO STATION	LT/RT	ACRE	POUND	POUND	POUND	SQ YD
310+20.50	316+29.46	LT	0.25	16.75	16.75	16.75	893
320+56.40	327+97.18	LT	0.25	15.00	15.00	15.00	797
310+08.17	316+44.25	RT	0.25	13.25	13.25	13.25	700
321+45.62	326+95.38	RT	0.25	11.75	11.75	11.75	621
		TOTAL	**1.00**	**57**	**57**	**57**	**3011**

MODEL: Default
FILE NAME: pw://hq-pwint01.a-e.transyscorp.com:transyscorp-pw1/Documents/Projects_2020/CH401/401200165/Road/303.04 - Standard Sheets/16 - Landscaping/D876N65-sht-lndscp2.dgn

TERRA ENGINEERING LTD.

USER NAME = mbmcwhorter	DESIGNED - XL	REVISED -	
	DRAWN - XL	REVISED -	
	CHECKED - JRH	REVISED -	
PLOT DATE = 10/15/2025	DATE - 10/15/2025	REVISED -	

STATE OF ILLINOIS
DEPARTMENT OF TRANSPORTATION

ILLINOIS 3 OVER PORT DISTRICT RAILYARD
GRADING AND LANDSCAPING PLAN GENERAL NOTES

SCALE: NONE | SHEET 1 OF 1 SHEETS | STA. TO STA.

F.A.P RTE.	SECTION	COUNTY	TOTAL SHEETS	SHEET NO.
0002	(103,104)BR-1	MADISON	178	76

CONTRACT NO. 76N65

ILLINOIS | FED. AID PROJECT

LEGEND

SEEDING, CLASS 2A (25000210)
EROSION CONTROL BLANKET (25100630)

0 50 100
SCALE IN FEET

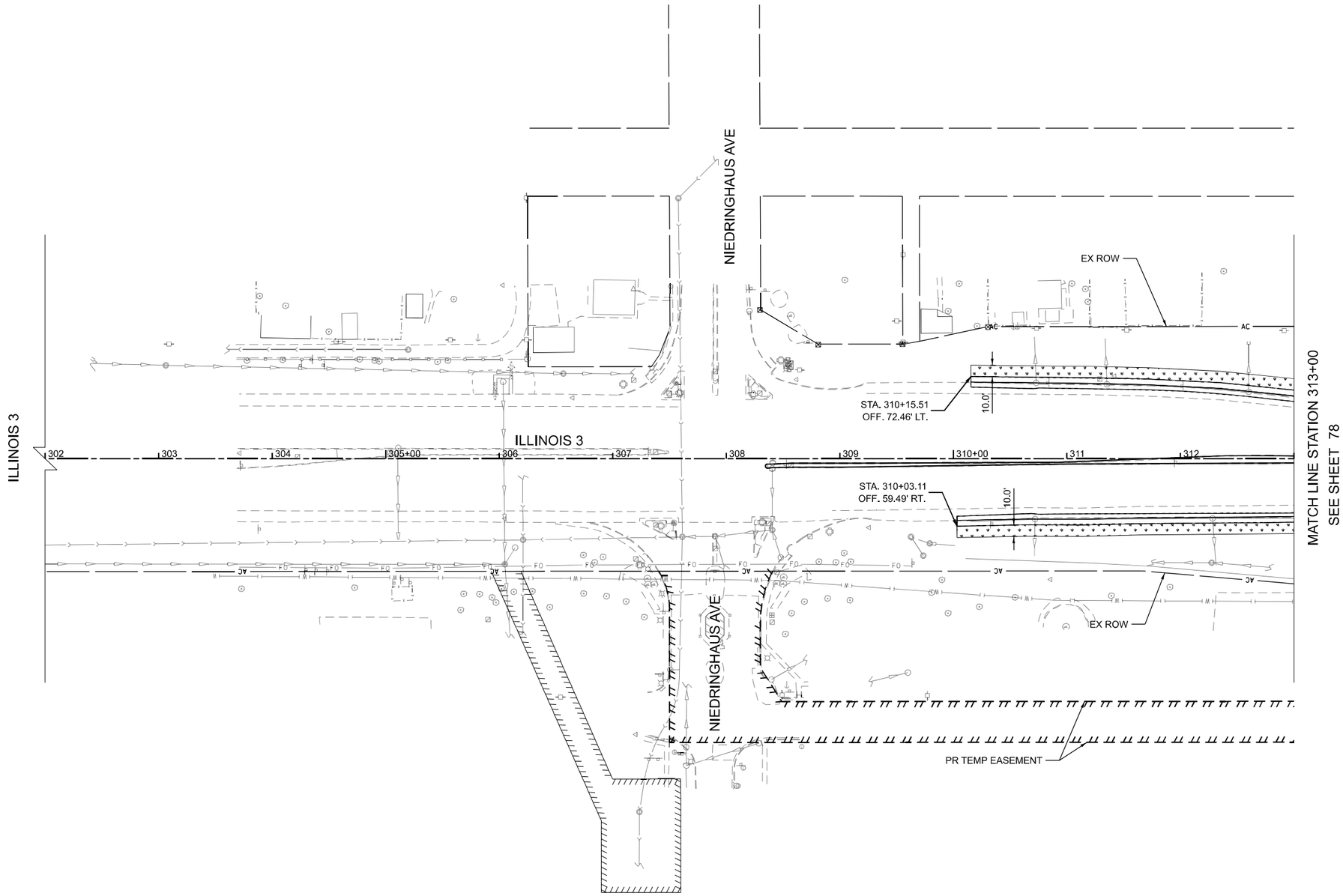

MODEL: 50 SCALE PLAN - Plan 1 [Sheet]
FILE NAME: pw://hq-pwint01.a-e-b.transyscorp.com:transyscorp-pw1/Documents/Projects_2020/CH401/401200165/Road/303.04 - Standard Sheets/16 - Landscaping/D876N65-sht-lndscp1.dgn

TERRA ENGINEERING LTD.

USER NAME = mbmcwhorter	DESIGNED - XL	REVISED -	
	DRAWN - XL	REVISED -	
	CHECKED - JRH	REVISED -	
PLOT DATE = 10/15/2025	DATE - 10/15/2025	REVISED -	

STATE OF ILLINOIS
DEPARTMENT OF TRANSPORTATION

ILLINOIS 3 OVER PORT DISTRICT RAILYARD
GRADING AND LANDSCAPING PLAN

SCALE: 1"=50' | SHEET 1 OF 3 SHEETS | STA. 302+00 TO STA. 313+00

F.A.P RTE.	SECTION	COUNTY	TOTAL SHEETS	SHEET NO.
0002	(103,104)BR-1	MADISON	178	77
		CONTRACT NO. 76N65		
	ILLINOIS	FED. AID PROJECT		

LEGEND

SEEDING, CLASS 2A (25000210)
EROSION CONTROL BLANKET (25100630)

0 50 100
SCALE IN FEET

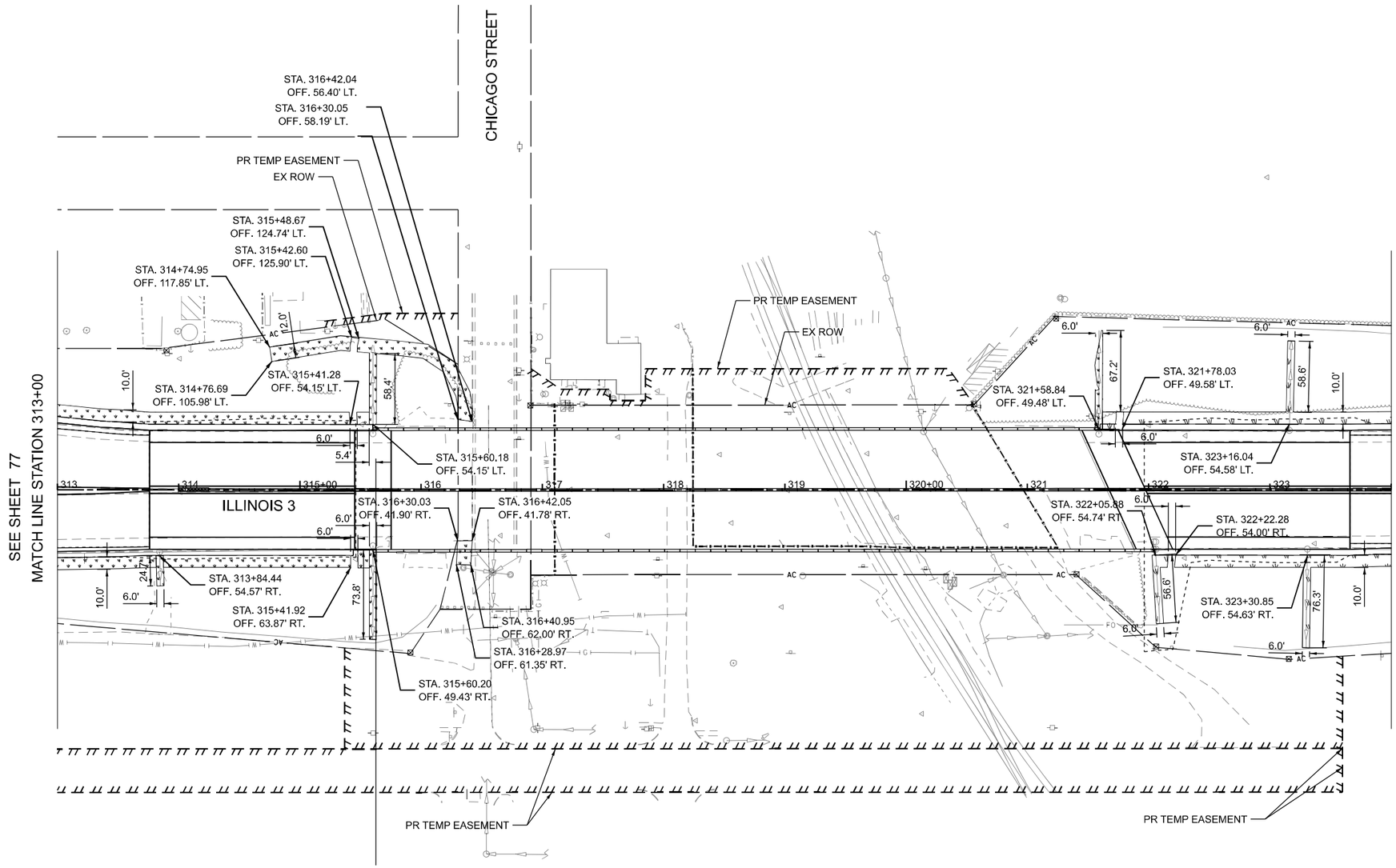

MODEL: 50 SCALE PLAN - Plan 2 [Sheet]
FILE NAME: pw://hq-pwin01.a-e.transyscorp.com:transyscorp-pw1/Documents/Projects_2020/CH401401200165/Road/303.04 - Standard Sheets/16 - Landscaping/D876N65-sht-lndscp1.dgn

TERRA ENGINEERING LTD.

USER NAME = mbmcwhorter	DESIGNED - XL	REVISED -	
	DRAWN - XL	REVISED -	
	CHECKED - JRH	REVISED -	
PLOT DATE = 10/15/2025	DATE - 10/15/2025	REVISED -	

STATE OF ILLINOIS
DEPARTMENT OF TRANSPORTATION

ILLINOIS 3 OVER PORT DISTRICT RAILYARD
GRADING AND LANDSCAPING PLAN

SCALE: 1"=50' | SHEET 2 OF 3 SHEETS | STA. 313+00 TO STA. 324+00

F.A.P RTE.	SECTION	COUNTY	TOTAL SHEETS	SHEET NO.
0002	(103,104)BR-1	MADISON	178	78
		CONTRACT NO. 76N65		
		ILLINOIS	FED. AID PROJECT	

LEGEND

SEEDING, CLASS 2A (25000210)
EROSION CONTROL BLANKET
(25100630)

0 50 100
SCALE IN FEET

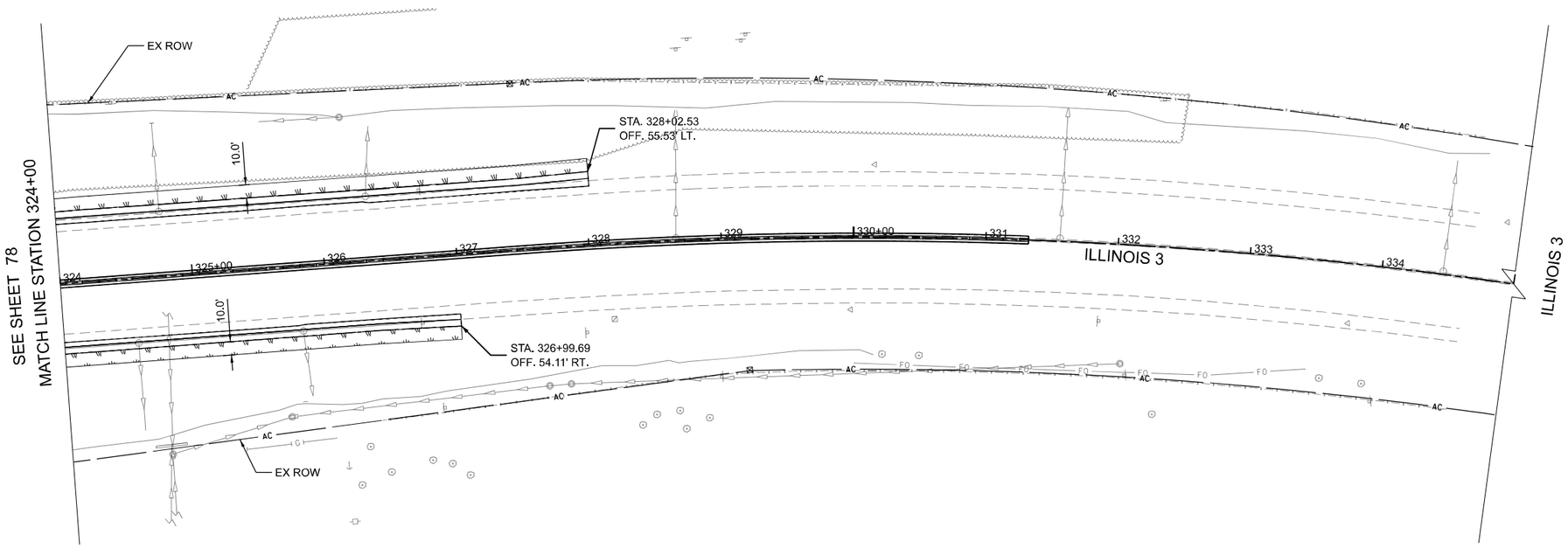

MODEL: 50 SCALE PLAN - Plan 3 [Sheet]
FILE NAME: pw://hq-pwint01.a-e.transyscorp.com:transyscorp-pw1/Documents/Projects_2020/CH401/401200165/Road/303.04 - Standard Sheets/16 - Landscaping/D876N65-sht-lndscp1.dgn

TERRA ENGINEERING LTD.

USER NAME = mbmcwhorter	DESIGNED - XL	REVISED -	
	DRAWN - XL	REVISED -	
	CHECKED - JRH	REVISED -	
PLOT DATE = 10/15/2025	DATE - 10/15/2025	REVISED -	

STATE OF ILLINOIS
DEPARTMENT OF TRANSPORTATION

ILLINOIS 3 OVER PORT DISTRICT RAILYARD
GRADING AND LANDSCAPING PLAN

SCALE: 1"=50' | SHEET 3 OF 3 SHEETS | STA. 324+00 TO STA. 335+00

F.A.P RTE.	SECTION	COUNTY	TOTAL SHEETS	SHEET NO.
0002	(103,104)BR-1	MADISON	178	79

CONTRACT NO. 76N65

ILLINOIS | FED. AID PROJECT

Bench Mark: Cut square on west side of traffic signal mast arm foundation in the southeast quad of Route 3 & Niedringhaus Ave. Elev. = 413.428.

Existing Structure: The existing bridge (SN 060-0202) was originally built in 1975 as an 11 span continuous prestressed concrete I beams structure. The back-to-back of abutments measures 592'-2⅝", and the out-to-out of deck is 101'-0" wide. The original deck is 7½" thick with 1½" bituminous concrete surface and it is supported by fourteen 48" prestressed concrete I beams spaced at 7'-7" on center. The substructure consists of cast-in-place reinforced concrete multi-column piers on creosote timber piles and cast-in-place reinforced concrete stub abutments on concrete piles. The bridge was repaved in 2005. In 2010 the bridge deck was cleaned and sealed.

Salvage: Traffic will be maintained utilizing Staged Construction.
No Salvage.

DESIGN STRESSES

FIELD UNIT (New Const.)
f'c = 4,000 psi (Superstructure)
f'c = 3,500 psi (Substructure)
fy = 60,000 psi (Reinforcement)
fy = 50,000 psi (M270 Grade 50)

FIELD UNIT (Exist. Const.)
fc = 1,400 psi (Substructure)
fs = 20,000 psi (Reinforcement)

PRECAST PRESTRESSED UNIT (New Const.)
f'c = 8,500 psi
f'ci = 6,500 psi
fpu = 270,000 psi (0.6" ∅ low lax. strands)
fpbt = 202,300 psi (0.6" ∅ low lax. strands)

DESIGN SPECIFICATIONS

2020 AASHTO LRFD Bridge Design Specifications, 9th Edition.

LOADING HL-93

Allow 50 lb/sq. ft. for future wearing surface

SEISMIC DATA

Seismic Retrofit Category (SRC) = B
Design Spectral Acceleration at 1.0 sec (SD1) = 0.230
Design Spectral Acceleration at 0.2 sec (SDS) = 0.516
Soil Site Class = D
Performance Level = PL1

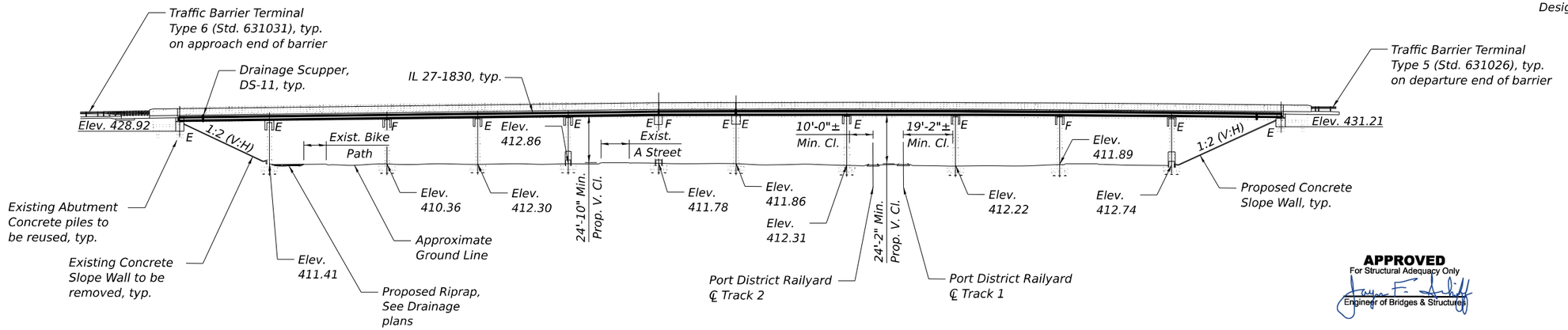

ELEVATION

(Looking East)

APPROVED
For Structural Adequacy Only
Engineer of Bridges & Structures

STATE OF ILLINOIS
ANNA M. DUKES
081-005598
CHICAGO, ILLINOIS
LICENSED STRUCTURAL ENGINEER

10/15/25
ANNA M DUKES, S.E.
NO. 081-005598
EXP. DATE 11/30/2026

Sheet S-1, S-2, S-4 - S-23, S-26 - S-33, S-36 - S-44, S-49 - S-63, S-69 - S-80, S-80A

LICENSED STRUCTURAL ENGINEER
ALEX C BENZ
081-007814
STATE OF ILLINOIS

10/15/25
ALEX C. BENZ, S.E.
NO. 081-007814
EXP. DATE 11/30/2026

Sheet S-3, S-24, S-25, S-34, S-35, S-45 - S-48, S-64 - S-68.

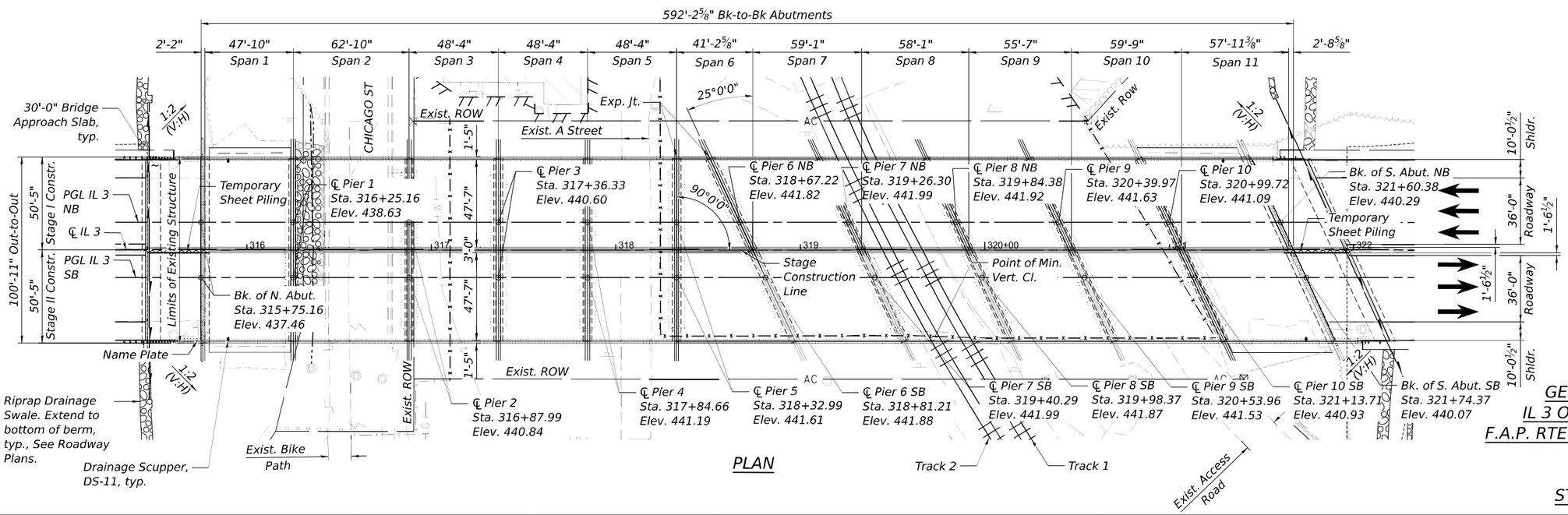

PLAN

Proposed Structure
Range 10W 3rd P.M.

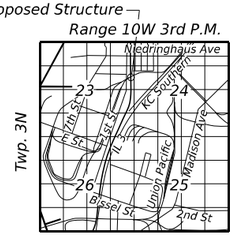

LOCATION SKETCH

GENERAL PLAN & ELEVATION
IL 3 OVER ARMY DEPOT RAILROAD
F.A.P. RTE. 0002 (IL 3) - SEC. (103,104)BR-1
MADISON COUNTY
STATION 318+71.27
STRUCTURE NO. 060-0202

TRANSYSTEMS

USER NAME = mbmcwhorter	DESIGNED - IIP	REVISED -	STATE OF ILLINOIS DEPARTMENT OF TRANSPORTATION	GENERAL PLAN AND ELEVATION STRUCTURE NO. 060-0202
	CHECKED - AMD	REVISED -		
PLOT SCALE =	DRAWN - IIP	REVISED -		
PLOT DATE = 11/13/2025	CHECKED - AMD	REVISED -		SHEET S-01 OF S-80 SHEETS

F.A.P. RTE.	SECTION	COUNTY	TOTAL SHEETS	SHEET NO.
0002	(103,104)BR-1	MADISON	178	80
		CONTRACT NO. 76N65		
		ILLINOIS	FED. AID PROJECT	

MODEL: Sheet View
FILE NAME: pw://hq-pwint01.a-e.transyscorp.com:transyscorp-pw1/Documents/Projects_2020/CH401/401201165/Bridge/304.02 - Sheet Files/06000202-D876N65-001-GPE.dgn

GENERAL NOTES:

1. Reinforcement bars designated (E) shall be epoxy coated.
2. Plan dimensions and details relative to existing plans are subject to nominal construction variations. The Contractor shall field verify existing dimensions and details affecting new construction and make necessary approved adjustments prior to construction or ordering of materials. Such variations shall not be cause for additional compensation for a change in scope of the work, however, the Contractor will be paid for the quantity actually furnished at the unit price bid for the work.
3. The existing bearings contain lead. The Contractor shall take appropriate precautions to address the presence of lead on this project.
4. Fasteners shall be ASTM F 3125 Grade A325 Type 1. Fasteners shall be hot dip galvanized. See Special Provision for "Hot Dip Galvanizing for Structural Steel." Bolts ¾ in. diameter, holes $^{15}/_{16}$ in. diameter, unless otherwise noted.
5. Cleaning and field painting of structural steel shall be done under a separate painting contract.

STATION 318+71.27
RE-BUILT 202_ BY
STATE OF ILLINOIS
F.A.P. RT. 0002
SEC. (103,104)BR-1
LOADING HL-93
STRUCTURE NO. 060-0202

NAME PLATE

See Std. 515001

Existing Name Plate shall be cleaned and relocated next to new Name Plate. Cost included with Name Plates.

Note:
When the deck pour is stopped for the day at one or more of the transverse bonded construction joints in the deck pouring sequence as shown, the next pour shall not be made until both of the following are met:
1. At least 72 hours shall have elapsed from the end of the previous pour.
2. The concrete strength shall have attained a minimum flexural strength of 675 psi or a minimum compressive strength of 4000 psi.

INDEX OF SHEETS

TOTAL BILL OF MATERIAL

ITEM	UNIT	SUPER	SUB	TOTAL
Removal of Existing Superstructures	Each	1		1
Concrete Removal	Cu Yd		340.1	340.1
Slope Wall Removal	Sq Yd		928	928
Protective Shield	Sq Yd	6,845		6,845
Structure Excavation	Cu Yd		722.0	722.0
Concrete Structures	Cu Yd		1,009.9	1,009.9
Concrete Superstructure	Cu Yd	2,257.8		2,257.8
Protective Coat	Sq Yd	8,643		8,643
Concrete Superstructure (Approach Slab)	Cu Yd	283.2		283.2
Furnishing and Erecting Precast Prestressed Concrete Beams, IL27N	Foot	8,097		8,097
Reinforcement Bars, Epoxy Coated	Pound	763,150	120,990	884,140
Bar Splicers	Each		36	36
Slope Wall 4 Inch	Sq Yd		1,356	1,356
Name Plates	Each	1		1
Preformed Joint Seal 2 1/2"	Foot	1,302		1,302
Preformed Joint Strip Seal	Foot	210		210
Elastomeric Bearing Assembly, Type I	Each	238		238
Anchor Bolts, 3/4"	Each	28		28
Anchor Bolts, 1"	Each	476		476
Temporary Sheet Piling	Sq Ft		794	794
Granular Backfill For Structures	Cu Yd		384.0	384.0
Concrete Sealer	Sq Ft		3,236	3,236
Epoxy Crack Injection	Foot		4	4
Geocomposite Wall Drain	Sq Yd		202	202
Pipe Underdrains for Structures 4"	Foot		282	282
Bridge Deck Grooving (Longitudinal)	Sq Yd	5,198		5,198
Bar Terminators	Each	1,212		1,212
Drainage Scuppers, DS-11	Each	4		4
Structural Repair of Concrete (depth Equal To Or Less Than 5 Inches)	Sq Ft		78	78
Diamond Grinding (Bridge Section)	Sq Yd	6,299		6,299

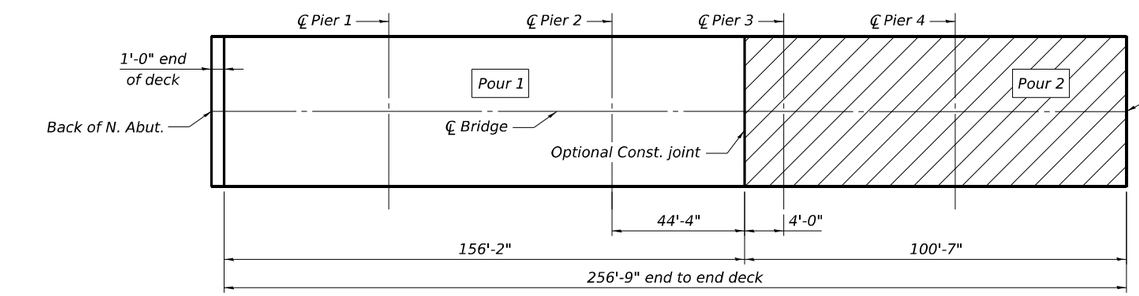

SPANS 1-5 DECK POURING SEQUENCE

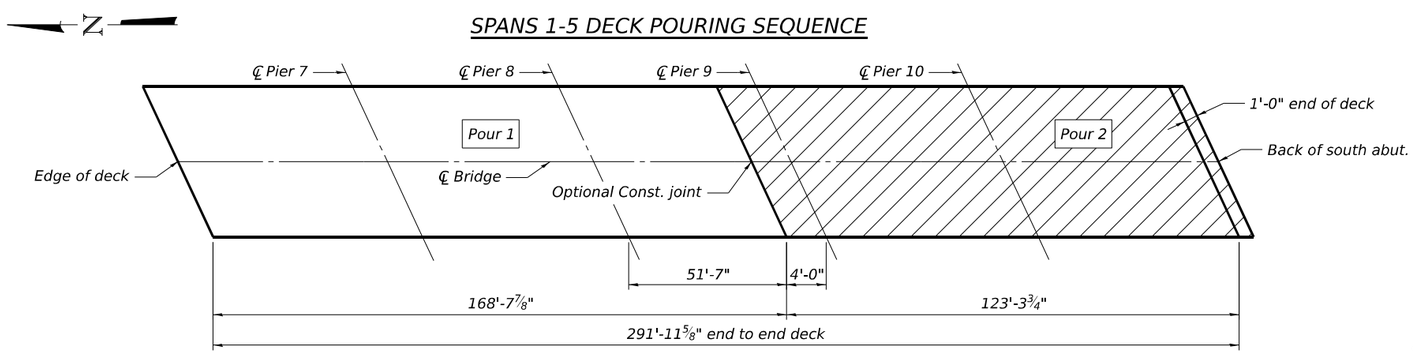

SPANS 7-11 DECK POURING SEQUENCE

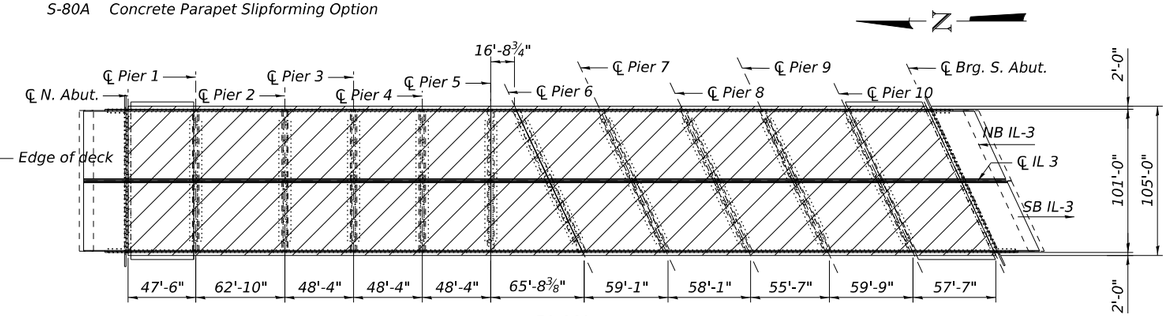

PLAN

(Limits of Protective Shield)

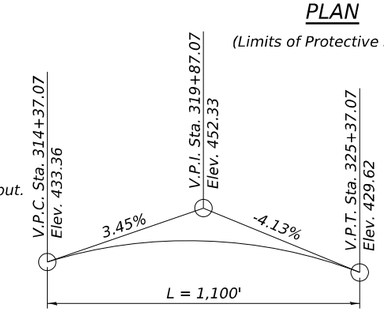

PROFILE GRADE IL 3 SB AND NB

Up to ¼ inch to be ground off the bridge deck and the bridge approach slabs. The Profile Grade shows the final grade after grinding.

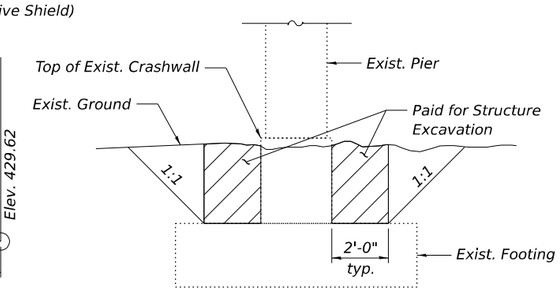

EXCAVATION AT PIER 4, 5 AND 10

MODEL: Sheet View
FILE NAME: pw://hq-pwint01.a-e.transyscorp.com:transyscorp-pw1/Documents/Projects_2020/CH401/401200165/Bridge/304.02 - Sheet Files/0600202-D876N65-002-GENERAL DATA.dgn

TRANSYSTEMS

USER NAME = mbmcwhorter	DESIGNED - IIP	REVISED -	
	CHECKED - AMD	REVISED -	
PLOT SCALE =	DRAWN - IIP	REVISED -	
PLOT DATE = 11/14/2025	CHECKED - AMD	REVISED -	

STATE OF ILLINOIS
DEPARTMENT OF TRANSPORTATION

GENERAL DATA
STRUCTURE NO. 060-0202

SHEET S-02 OF S-80 SHEETS

F.A.P. RTE.	SECTION	COUNTY	TOTAL SHEETS	SHEET NO.
0002	(103,104)BR-1	MADISON	178	81
		CONTRACT NO. 76N65		
		ILLINOIS	FED. AID PROJECT	

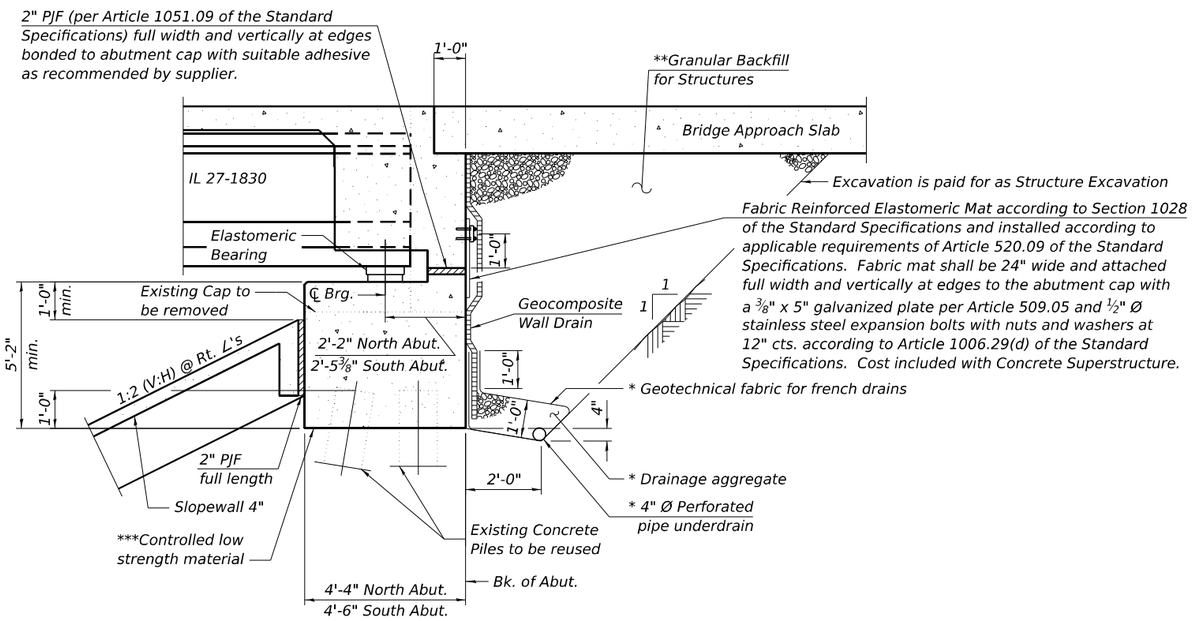

SECTION THRU SEMI-INTEGRAL ABUTMENT

(Horiz. dim. at Rt. ∠'s)

* Included in the cost of Pipe Underdrains for Structures. (See Special Provisions)

** Granular Backfill for Structures shall follow Standard Specification 586 except the course aggregate shall be grade CA 7, CA 11, or CA 14.

*** CLSM shall be used to fill all voids under abutments as determined by the Engineer. Cost included with Concrete Structures.

Note:
All drainage system components shall extend to 2'-0" from the end of each wingwall except an outlet pipe shall extend until intersecting with the side slopes. The pipes shall drain into concrete headwalls. (See Article 601.05 of the Standard Specifications and Highway Standard 601101).

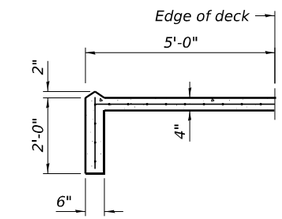

SECTION A-A

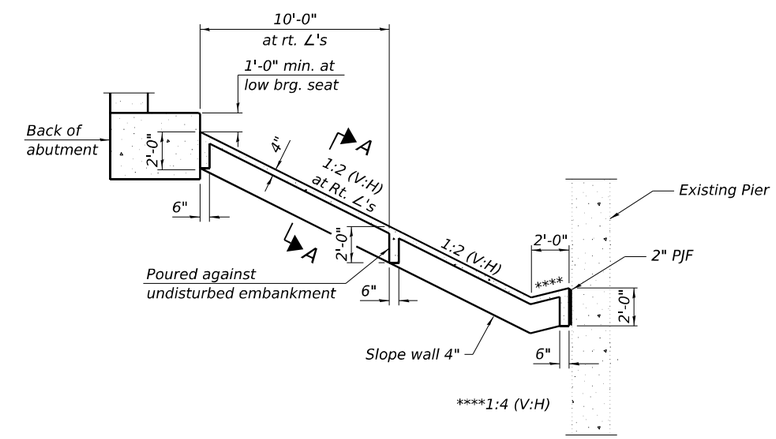

SECTION THRU CONCRETE SLOPE WALL

Slope wall shall be reinforced with welded wire fabric, 6 in. x 6 in. - W4.0 x W4.0, weighing 58 lbs. per 100 sq. ft.

MODEL: Default
FILE NAME: pw://hq-pwint01.a-e.transyscorp.com:transyscorp-pw1/Documents/Projects_2020/CH401/401200165/Bridge/304.04 - EFK/Sheet Files/0600202-D876N65-003-ABUTMENT SECTIONS AND SLOPE WALL DETAILS.dgn

11/13/2025 9:58:36 AM

EFK•Moen Civil Engineering Design

USER NAME = mbmcwhorter	DESIGNED - KRH	REVISED -	
	CHECKED - ACB	REVISED -	
PLOT SCALE =	DRAWN - KRH	REVISED -	
PLOT DATE = 11/13/2025	CHECKED - ACB	REVISED -	

STATE OF ILLINOIS
DEPARTMENT OF TRANSPORTATION

ABUTMENT SECTIONS AND SLOPE WALL DETAILS
STRUCTURE NO. 060-0202

SHEET S-03 OF S-80 SHEETS

F.A.P. RTE.	SECTION	COUNTY	TOTAL SHEETS	SHEET NO.
0002	(103,104)BR-1	MADISON	178	82
		CONTRACT NO. 76N65		
		ILLINOIS	FED. AID PROJECT	

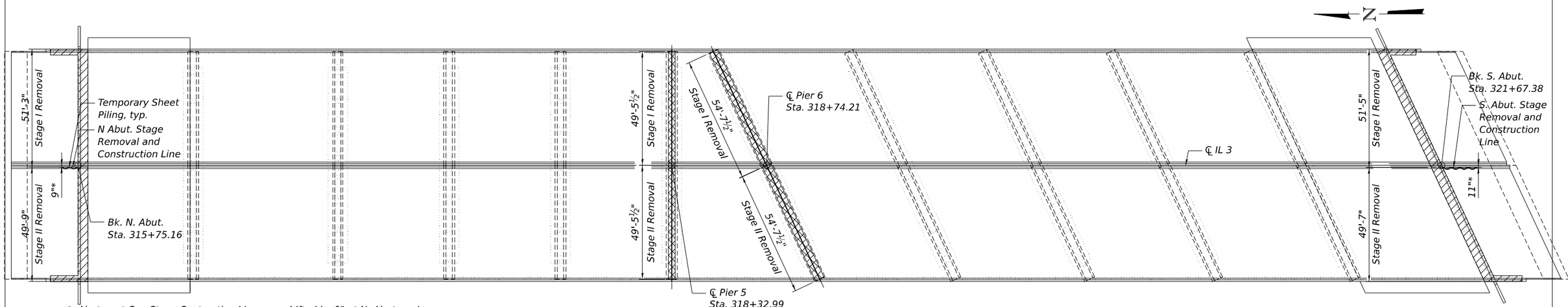

* Abutment Cap Stage Contruction Lines are shifted by 9" at N. Abut. and 11" at S. Abut. from ℄ IL 3 and superstructure Stage Conctruction Line.

PLAN

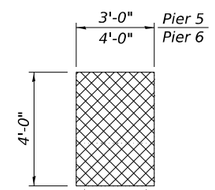

LEGEND:

Denotes Removal of Abutment Cap, Backwall and Wingwalls

Denotes Removal of Pier Cap

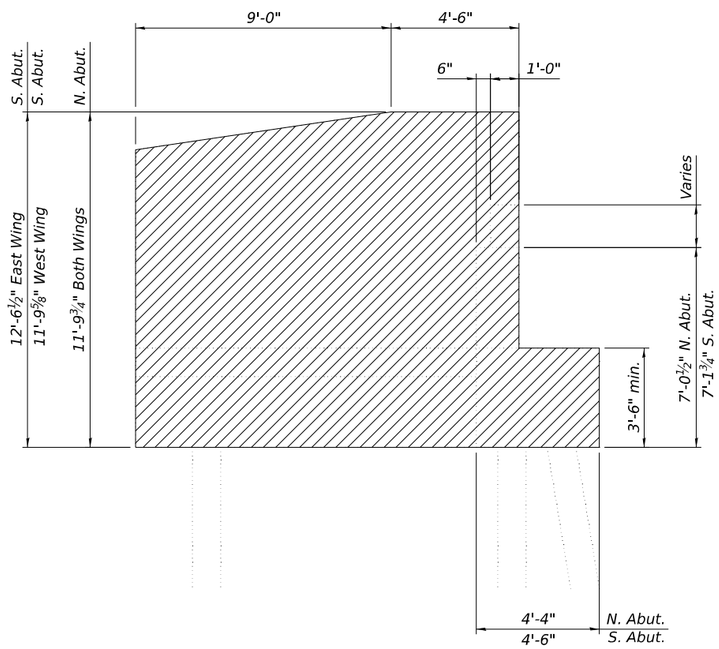

SECTION THRU EXISTING ABUTMENTS

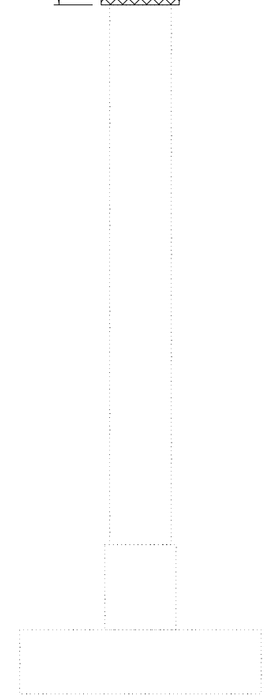

SECTION THRU EXISTING PIER 5 & 6

Steps not shown

BILL OF MATERIAL

ITEM	UNIT	TOTAL
Concrete Removal	Cu. Yd.	340.1

NOTE:

1. Partial removal of Abutments and Piers shall be in accordance with article 501.05 of the standard specifications.
2. Existing vertical column reinforcement extending into the pier cap at Pier 5 and 6 shall be cleaned, straightened and incorporated into the new construction. Cost included in Concrete Removal.
3. See sheet S-06 of S-80 for Temporary Sheet Piling details.

MODEL: Sheet View
FILE NAME: pw://hq-pwint01.a-e.transyscorp.com:transyscorp-pw1/Documents/Projects_2020/CH401/401200165/Bridge/304.02 - Sheet Files/0600202-D876N65-004-REMOVAL.dgn

TRANSYSTEMS

USER NAME = mbmcwhorter	DESIGNED - IIP	REVISED -	
	CHECKED - IS	REVISED -	
PLOT SCALE =	DRAWN - IIP	REVISED -	
PLOT DATE = 11/13/2025	CHECKED - IS	REVISED -	

STATE OF ILLINOIS
DEPARTMENT OF TRANSPORTATION

SUBSTRUCTURE REMOVAL DETAILS
STRUCTURE NO. 060-0202

SHEET S-04 OF S-80 SHEETS

F.A.P. RTE.	SECTION	COUNTY	TOTAL SHEETS	SHEET NO.
0002	(103,104)BR-1	MADISON	178	83
		CONTRACT NO. 76N65		
	ILLINOIS	FED. AID PROJECT		

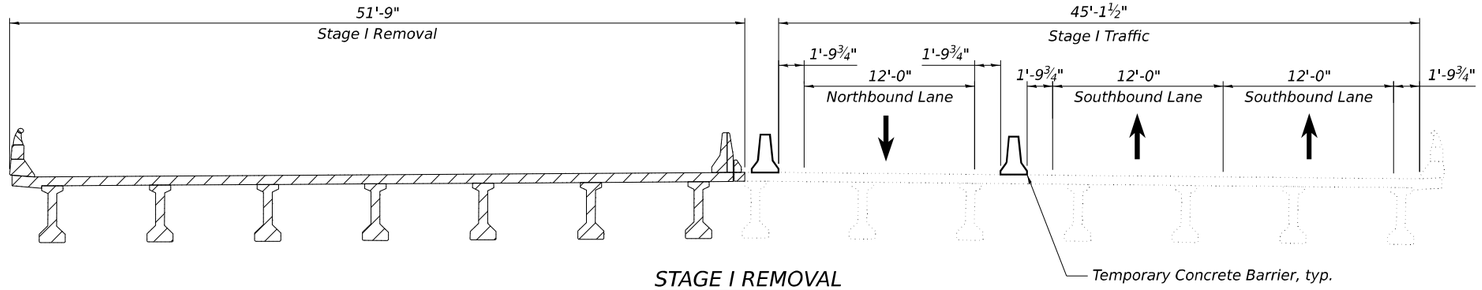

STAGE I REMOVAL

(Looking South)

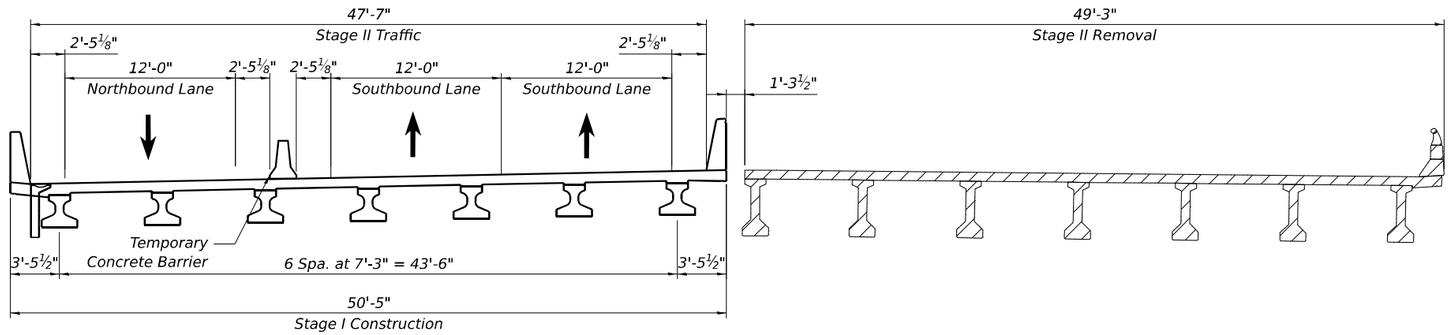

STAGE I CONSTRUCTION & STAGE II REMOVAL

(Looking South)

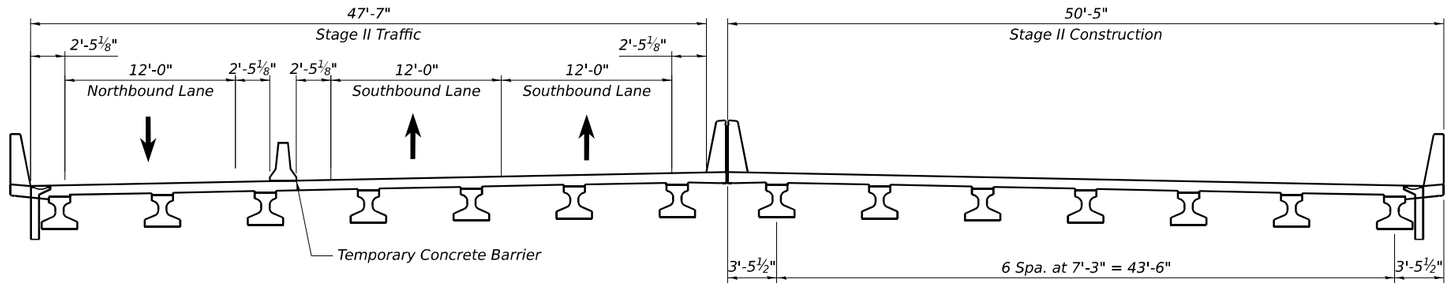

STAGE II CONSTRUCTION

(Looking South)

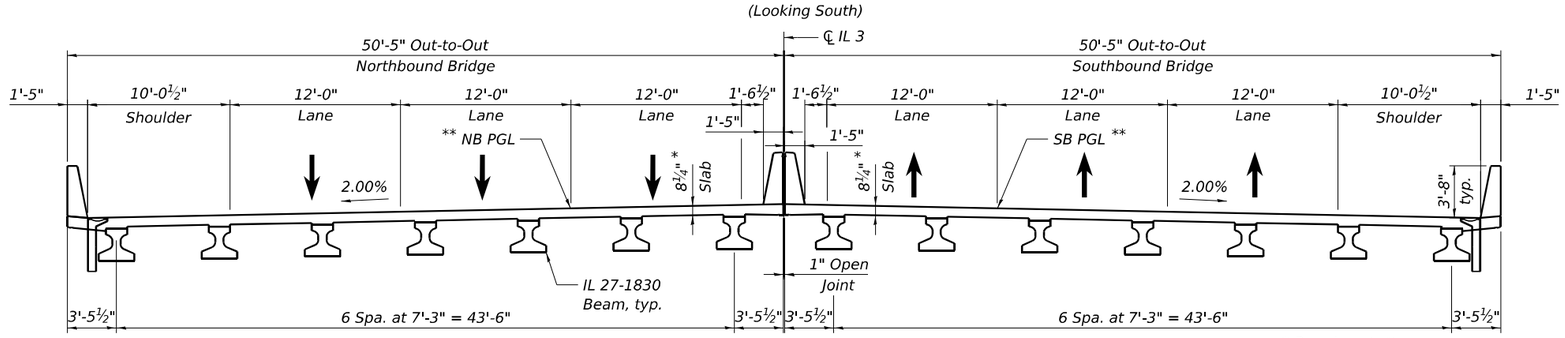

FINAL CROSS SECTION

(Looking South)

* Prior to grinding
** PGL after grinding

NOTE:

1. Hatched areas indicate removal of existing superstructure.

MODEL: Sheet View
FILE NAME: pw://hq-pwint01.a-e.transyscorp.com:transyscorp-pw1/Documents/Projects_2020/CH401/401200165/Bridge/304.02 - Sheet Files/0600202-D876N65-005-STAGING.dgn

TRANSYSTEMS

USER NAME = mbmcwhorter	DESIGNED - IIP	REVISED -	
	CHECKED - IS	REVISED -	
PLOT SCALE =	DRAWN - IIP	REVISED -	
PLOT DATE = 11/13/2025	CHECKED - IS	REVISED -	

STATE OF ILLINOIS
DEPARTMENT OF TRANSPORTATION

CONSTRUCTION STAGING DETAILS
STRUCTURE NO. 060-0202

SHEET S-05 OF S-80 SHEETS

F.A.P. RTE.	SECTION	COUNTY	TOTAL SHEETS	SHEET NO.
0002	(103,104)BR-1	MADISON	178	84

CONTRACT NO. 76N65

ILLINOIS | FED. AID PROJECT

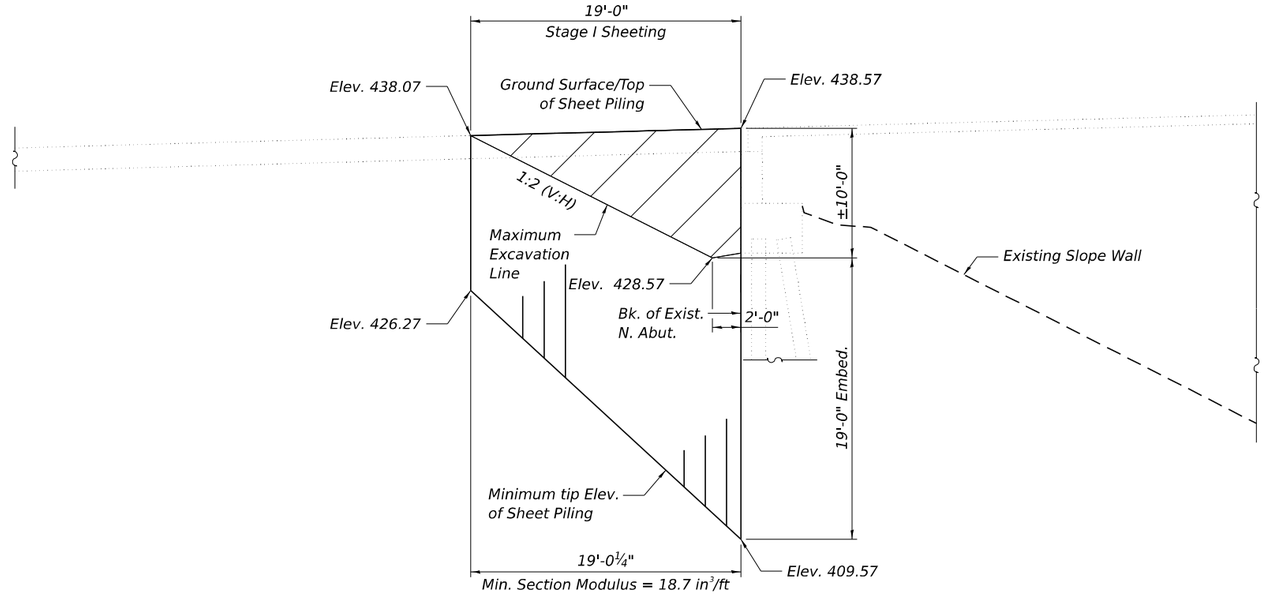

N. ABUTMENT ELEVATION

(Looking East)

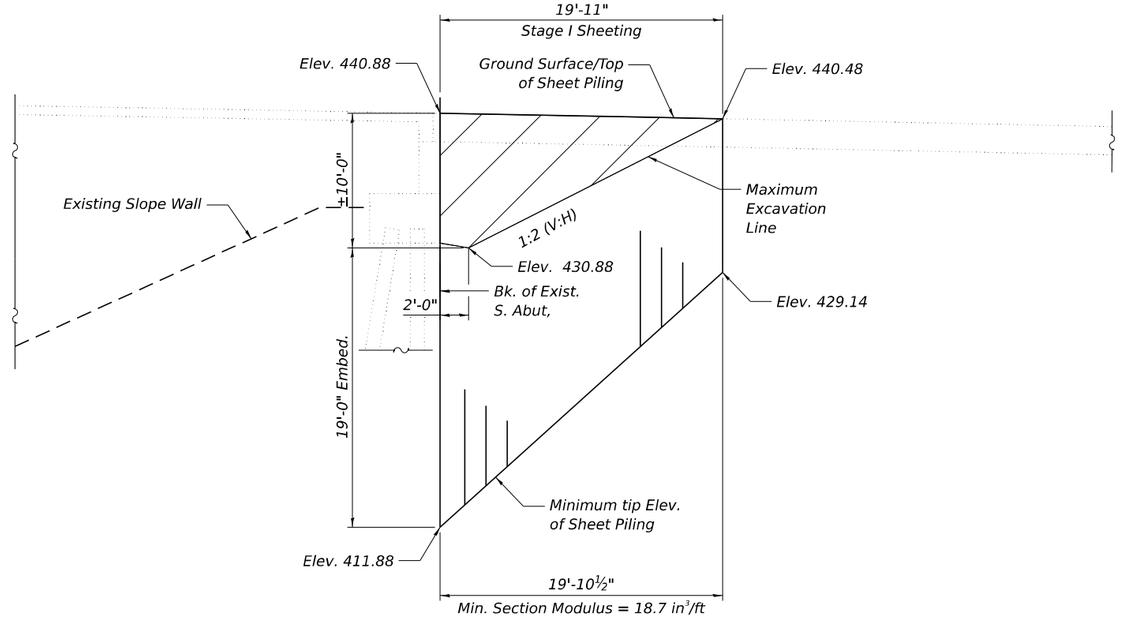

S. ABUTMENT ELEVATION

(Looking East)

NOTE:

1. If the Contractor chooses to alter the temporary cantilevered sheet piling design requirements shown on the plans, a design submittal including plan details and calculations will be required for review and acceptance by the Engineer.
2. Install Temporary Sheet Piling prior to stage I removal of the existing abutment to retain Stage I Construction.

MODEL: Sheet View
FILE NAME: pw://hq-pwint01.a-e.transyscorp.com:transyscorp-pw1/Documents/Projects_2020/CH401/401200165/Bridge/304.02 - Sheet Files/0600202-D876N65-006-TEMPORARY SHEETING DETAILS.dgn

TRANSYSTEMS

USER NAME = mbmcwhorter	DESIGNED - IIP	REVISED -	
	CHECKED - IS	REVISED -	
PLOT SCALE =	DRAWN - IIP	REVISED -	
PLOT DATE = 11/13/2025	CHECKED - IS	REVISED -	

STATE OF ILLINOIS
DEPARTMENT OF TRANSPORTATION

TEMPORARY SHEET PILING DETAILS
STRUCTURE NO. 060-0202

SHEET S-06 OF S-80 SHEETS

F.A.P. RTE.	SECTION	COUNTY	TOTAL SHEETS	SHEET NO.
0002	(103,104)BR-1	MADISON	178	85
		CONTRACT NO. 76N65		
		ILLINOIS	FED. AID PROJECT	

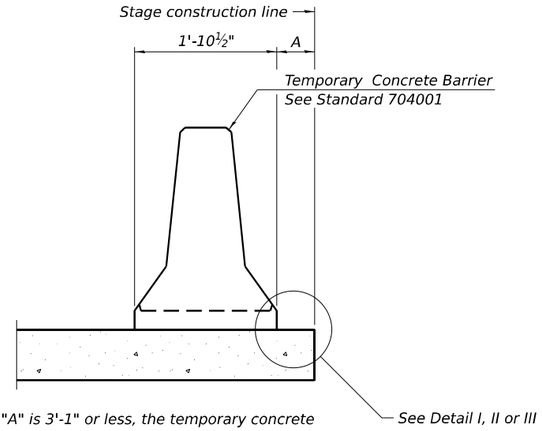

When "A" is 3'-1" or less, the temporary concrete barrier shall be restrained to the new slab according to Detail I, II or III. No restraint is required when "A" is greater than 3'-1".

NEW SLAB OR NEW DECK BEAM

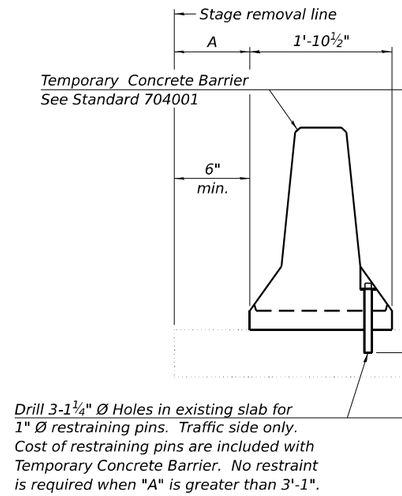

EXISTING SLAB

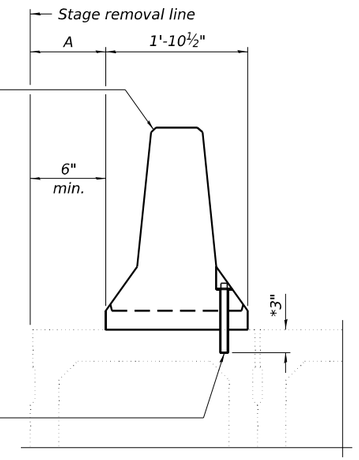

* When hot-mix asphalt wearing surface is present, embedment shall be 3" plus the wearing surface depth.

EXISTING DECK BEAM

SECTIONS THRU SLAB OR DECK BEAM

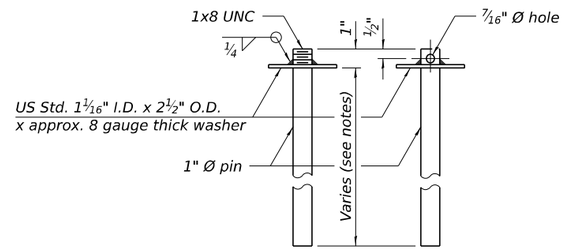

RESTRAINING PIN

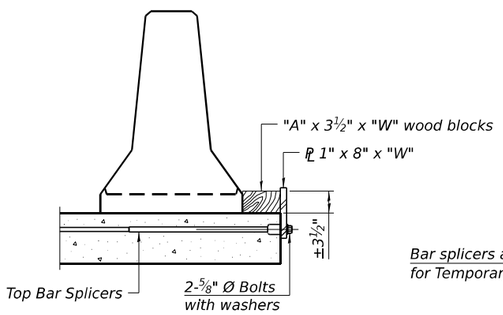

DETAIL I

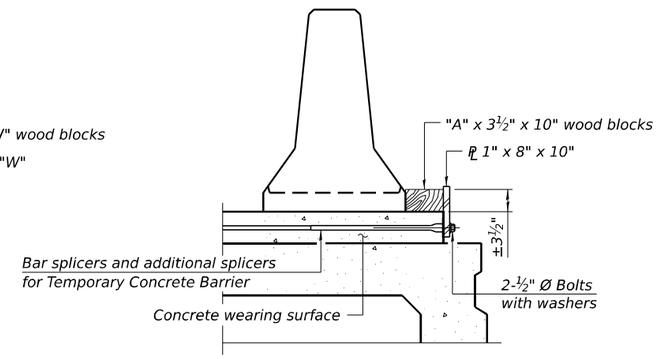

DETAIL II

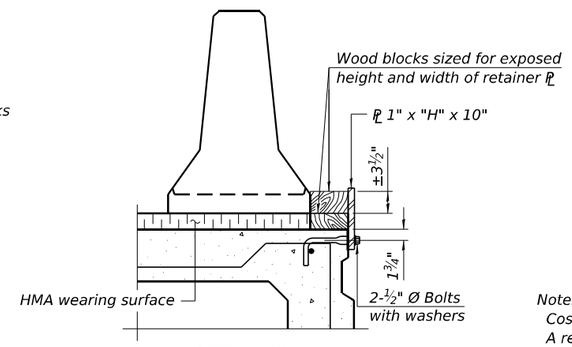

DETAIL III

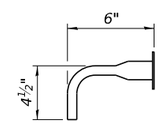

BAR SPLICER FOR #4 BAR - DETAIL III

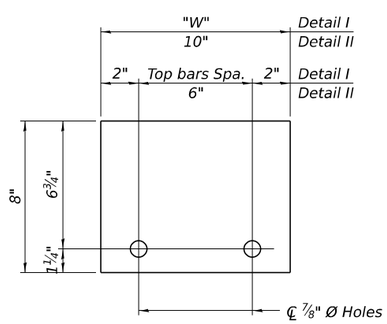

STEEL RETAINER PL 1" x 8" x "W"

(Detail I and II)

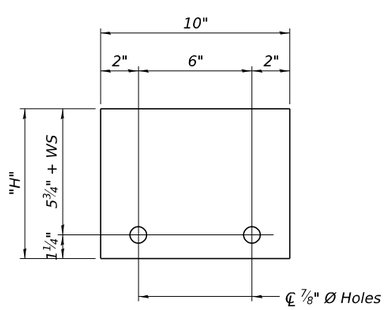

STEEL RETAINER PL 1" x "H" x 10"

(Detail III)

RAILING CRITERIA

NCHRP 350 Test Level	3
Railing Weight (plf)	440

Notes:

Cost of retainer assembly is included with Temporary Concrete Barrier.

A retainer assembly shall be located at the approximate ℄ of each temporary concrete barrier.

The retainer plate shall not be removed until the concrete on the adjacent stage is ready to be poured. For Detail III applications the retainer plate shall not be removed until just prior to placing the adjacent beam.

When the 'A' dimension is less than 1½", the wood block shall be omitted and the barrier shall be placed in direct contact with the steel retainer plate. For deck beam applications the minimum required 'A' distance is 6" to accommodate the shear key clamping device.

Detail I - Installation for a new bridge deck or bridge slab.

Detail II - Installation for a new deck beam with an initial concrete wearing surface. Additional bar splicers shall be provided at 6'-0" centers and paired with the bar splicers of the concrete wearing surface reinforcement to accommodate the installation of the retainer assemblies. The cost of the additional bar splicers is included with the concrete wearing surface.

Detail III - Installation for a new deck beam with no initial wearing surface or with an initial hot-mix asphalt (HMA) wearing surface present. The deck beam directly beneath the temporary concrete barrier shall be fabricated with bar splicer inserts in the side of the beam, as detailed, to accommodate the installation of the retainer assemblies. A pair of bar splicers, 6" apart, shall be placed at 6'-0" centers along the length of the beam. The cost of the bar splicers is included with the deck beam.

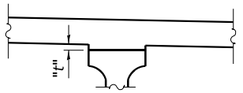

FILLET HEIGHTS

To determine "t": After all precast prestressed beams have been erected, elevations of the top flanges of the beams shall be taken at intervals shown below. These elevations subtracted from the "Theoretical Grade Elevations Adjusted for Dead Load Deflection and Grinding" shown on sheets S-10 thru S-23 of S-80, minus the initial slab thickness prior to grinding, equals the fillet height "t" above top flange of beams.

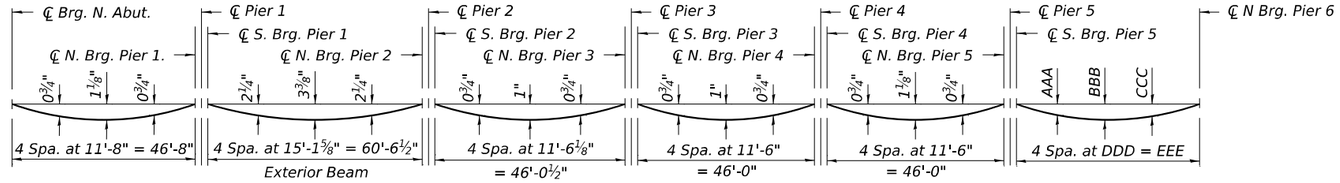

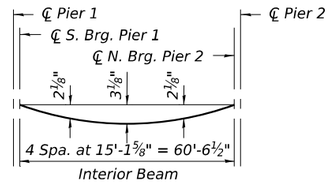

DEAD LOAD DEFLECTION DIAGRAM

(Includes weight of concrete only.)

Note:
The above deflections are not to be used in the field if the engineer is working from the grade elevations adjusted for dead load deflections and grinding as shown on sheets S-10 thru S-23 of S-80.

Span 6 DEAD LOAD DEFLECTION

Beam	AAA	BBB	CCC	DDD	EEE
1	0"	0"	0"	4'-2⅜"	16'-9½"
2	0"	0"	0"	5'-0½"	20'-2⅛"
3	0"	0"	0"	5'-10⅝"	23'-6⅝"
4	⅛"	⅛"	⅛"	6'-8¾"	26'-11¼"
5	⅛"	⅛"	⅛"	7'-7"	30'-3¾"
6	¼"	¼"	⅛"	8'-5⅛"	33'-8⅜"
7	⅜"	½"	⅜"	9'-3¼"	37'-0⅞"
8	½"	¾"	½"	10'-1"	40'-4⅛"
9	⅝"	⅞"	⅝"	10'-11⅛"	43'-8⅝"
10	⅞"	1⅛"	⅞"	11'-9¼"	47'-1¼"
11	1⅛"	1½"	1⅛"	12'-7½"	50'-5¾"
12	1⅜"	1⅞"	1⅜"	13'-5⅝"	53'-10⅜"
13	1¾"	2½"	1¾"	14'-3¾"	57'-3"
14	2⅜"	3½"	2¾"	15'-1⅞"	60'-7½"

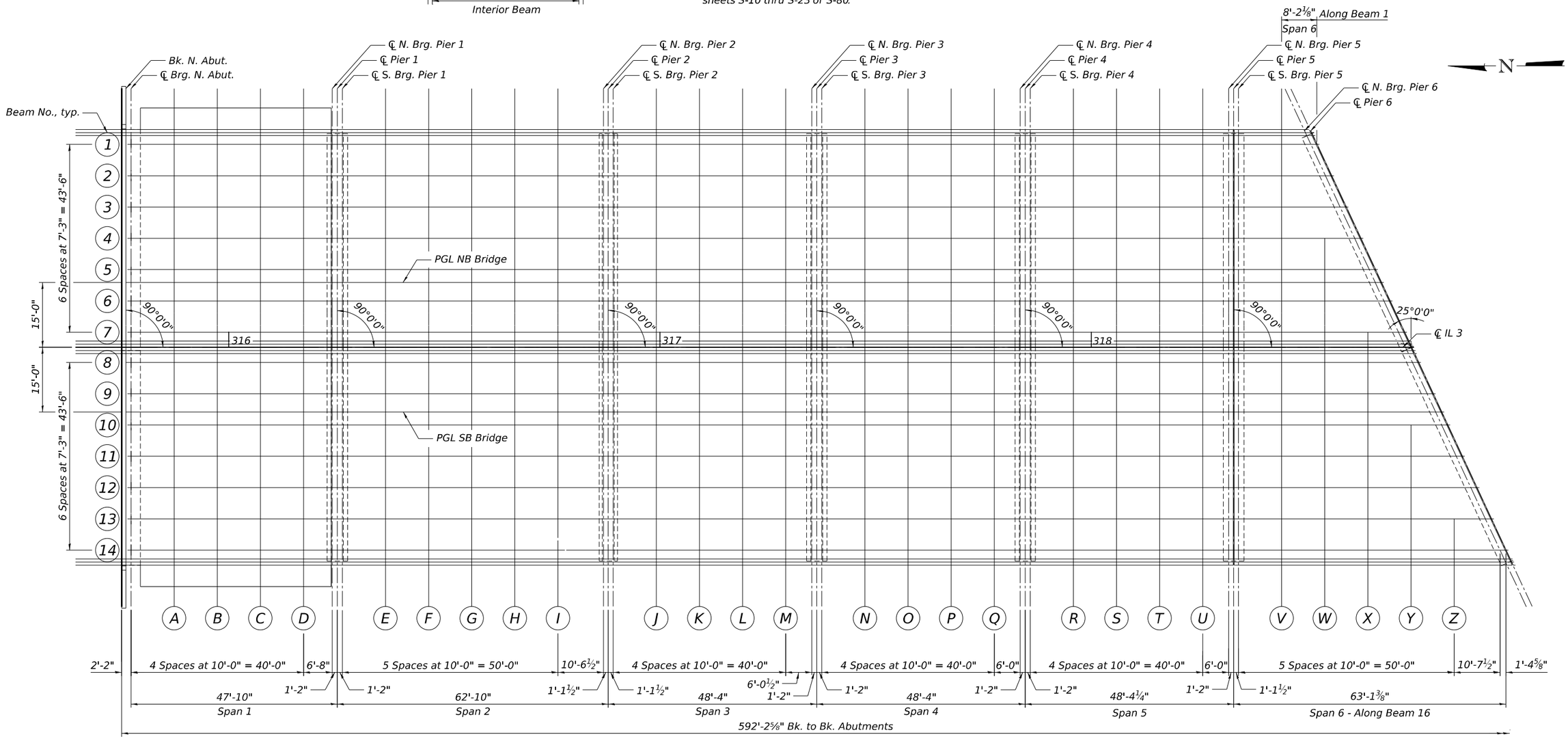

PLAN - SPAN 1 THRU 6

MODEL: Sheet
FILE NAME: pw://hq-pwint01.a-e.transyscorp.com:transyscorp-pw1/Documents/Projects_2020/CH401/401200165/Bridge/304.02 - Sheet Files/0600202-D876N65-008-TOP OF SLAB ELEVATION LOCATIONS 1.dgn

TRANSYSTEMS

USER NAME = mbmcwhorter	DESIGNED - AWT	REVISED -	
	CHECKED - IIP	REVISED -	
PLOT SCALE =	DRAWN - JSC	REVISED -	
PLOT DATE = 11/13/2025	CHECKED - AWT	REVISED -	

STATE OF ILLINOIS
DEPARTMENT OF TRANSPORTATION

TOP OF SLAB ELEVATION LOCATIONS 1
STRUCTURE NO. 060-0202

SHEET S-08 OF S-80 SHEETS

F.A.P. RTE.	SECTION	COUNTY	TOTAL SHEETS	SHEET NO.
0002	(103,104)BR-1	MADISON	178	87
		CONTRACT NO. 76N65		
		ILLINOIS	FED. AID PROJECT	

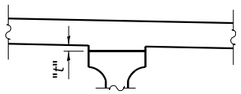

FILLET HEIGHTS

To determine "t": After all precast prestressed beams have been erected, elevations of the top flanges of the beams shall be taken at intervals shown below. These elevations subtracted from the "Theoretical Grade Elevations Adjusted for Dead Load Deflection and Grinding" shown on sheets S-10 thru S-23 of S-80, minus the initial slab thickness prior to grinding, equals the fillet height "t" above top flange of beams.

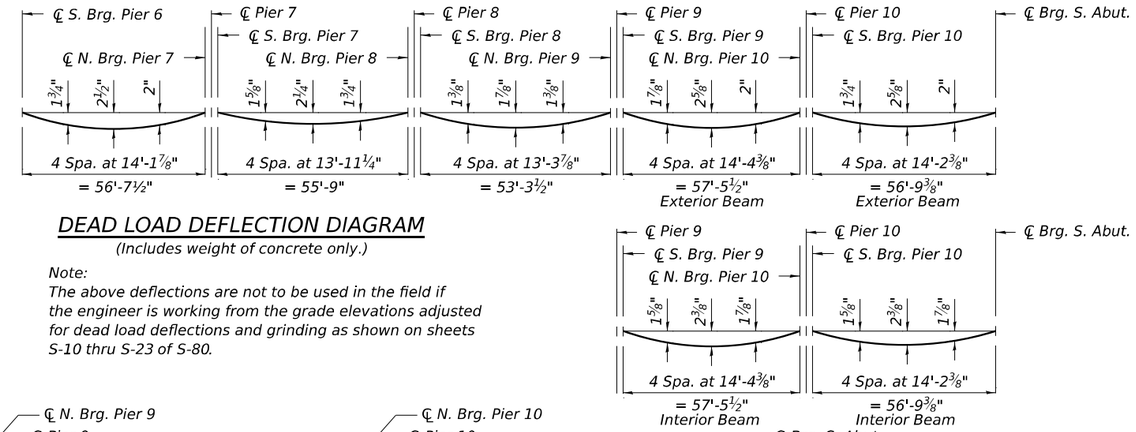

DEAD LOAD DEFLECTION DIAGRAM

(Includes weight of concrete only.)

Note:
The above deflections are not to be used in the field if the engineer is working from the grade elevations adjusted for dead load deflections and grinding as shown on sheets S-10 thru S-23 of S-80.

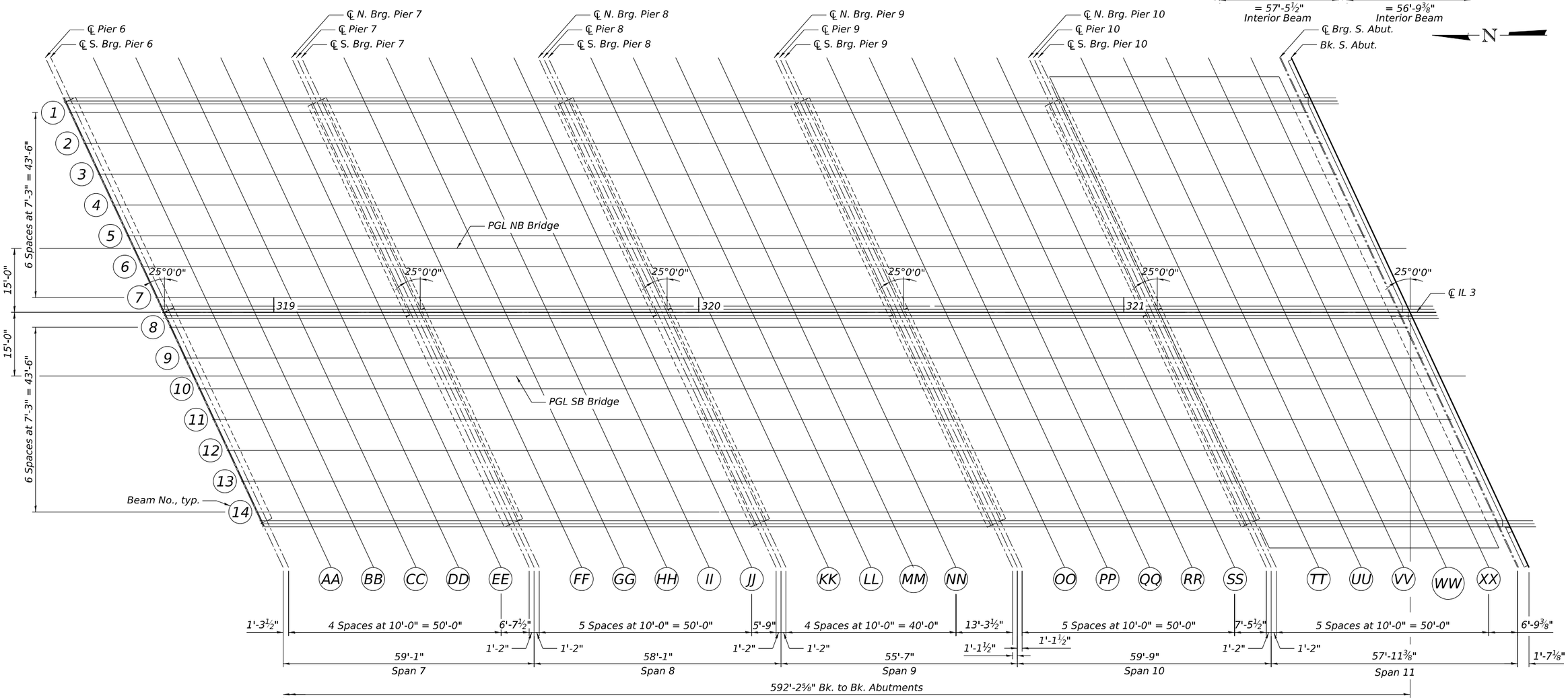

PLAN - SPAN 7 THRU 10

MODEL: Sheet
FILE NAME: pw://hq-pwint01.a-e.transyscorp.com:transyscorp-pw1/Documents/Projects_2020/CH401/401200165/Bridge/304.02 - Sheet Files/0600202-D876N65-009-TOP OF SLAB ELEVATION LOCATIONS 2.dgn

TRANSYSTEMS

USER NAME = mbmcwhorter	DESIGNED - AWT	REVISED -	
	CHECKED - IIP	REVISED -	
PLOT SCALE =	DRAWN - JSC	REVISED -	
PLOT DATE = 11/13/2025	CHECKED - AWT	REVISED -	

STATE OF ILLINOIS
DEPARTMENT OF TRANSPORTATION

TOP OF SLAB ELEVATION LOCATIONS 2
STRUCTURE NO. 060-0202

SHEET S-09 OF S-80 SHEETS

F.A.P. RTE.	SECTION	COUNTY	TOTAL SHEETS	SHEET NO.
0002	(103,104)BR-1	MADISON	178	88
		CONTRACT NO. 76N65		
	ILLINOIS	FED. AID PROJECT		

BEAM 1

Location	Station	Offset	Theoretical Grade Elevations	Theoretical Grade Elevations Adjusted For Dead Load Deflection and Grinding
BK. N. Abut.	315+75.16	-32.00	436.82	436.84
℄ Brg. N. Abut.	315+77.33	-32.00	436.88	436.90
A	315+87.33	-32.00	437.12	437.21
B	315+97.33	-32.00	437.36	437.48
C	316+07.33	-32.00	437.59	437.70
D	316+17.33	-32.00	437.82	437.88
℄ N. Brg. Pier 1	316+23.99	-32.00	437.96	437.98
℄ Pier 1	316+25.16	-32.00	437.99	438.01
℄ S. Brg. Pier 1	316+26.33	-32.00	438.01	438.03
E	316+36.33	-32.00	438.22	438.38
F	316+46.33	-32.00	438.43	438.69
G	316+56.33	-32.00	438.62	438.92
H	316+66.33	-32.00	438.81	439.08
I	316+76.33	-32.00	439.00	439.17
℄ N. Brg. Pier 2	316+86.87	-32.00	439.18	439.21
℄ Pier 2	316+87.99	-32.00	439.20	439.22
℄ S. Brg. Pier 2	316+89.12	-32.00	439.22	439.24
J	316+99.12	-32.00	439.39	439.47
K	317+09.12	-32.00	439.55	439.66
L	317+19.12	-32.00	439.71	439.81
M	317+29.12	-32.00	439.85	439.91
℄ N. Brg. Pier 3	317+35.16	-32.00	439.94	439.96
℄ Pier 3	317+36.33	-32.00	439.96	439.98
℄ S. Brg. Pier 3	317+37.49	-32.00	439.97	439.99
N	317+47.49	-32.00	440.11	440.18
O	317+57.49	-32.00	440.23	440.34
P	317+67.49	-32.00	440.35	440.46
Q	317+77.49	-32.00	440.47	440.53
℄ N. Brg. Pier 4	317+83.49	-32.00	440.53	440.55
℄ Pier 4	317+84.66	-32.00	440.55	440.57
℄ S. Brg. Pier 4	317+85.83	-32.00	440.56	440.58
R	317+95.83	-32.00	440.66	440.74
S	318+05.83	-32.00	440.75	440.87
T	318+15.83	-32.00	440.84	440.95
U	318+25.83	-32.00	440.92	440.98
℄ N. Brg. Pier 5	318+31.83	-32.00	440.97	440.99
℄ Pier 5	318+32.99	-32.00	440.97	441.00

BEAM 2

Location	Station	Offset	Theoretical Grade Elevations	Theoretical Grade Elevations Adjusted For Dead Load Deflection and Grinding
BK. N. Abut.	315+75.16	-24.75	436.97	436.99
℄ Brg. N. Abut.	315+77.33	-24.75	437.02	437.04
A	315+87.33	-24.75	437.27	437.35
B	315+97.33	-24.75	437.51	437.61
C	316+07.33	-24.75	437.74	437.84
D	316+17.33	-24.75	437.96	438.02
℄ N. Brg. Pier 1	316+23.99	-24.75	438.11	438.13
℄ Pier 1	316+25.16	-24.75	438.13	438.15
℄ S. Brg. Pier 1	316+26.33	-24.75	438.16	438.18
E	316+36.33	-24.75	438.37	438.52
F	316+46.33	-24.75	438.57	438.81
G	316+56.33	-24.75	438.77	439.05
H	316+66.33	-24.75	438.96	439.20
I	316+76.33	-24.75	439.14	439.30
℄ N. Brg. Pier 2	316+86.87	-24.75	439.33	439.35
℄ Pier 2	316+87.99	-24.75	439.35	439.37
℄ S. Brg. Pier 2	316+89.12	-24.75	439.37	439.39
J	316+99.12	-24.75	439.54	439.61
K	317+09.12	-24.75	439.70	439.80
L	317+19.12	-24.75	439.85	439.95
M	317+29.12	-24.75	440.00	440.05
℄ N. Brg. Pier 3	317+35.16	-24.75	440.08	440.10
℄ Pier 3	317+36.33	-24.75	440.10	440.12
℄ S. Brg. Pier 3	317+37.49	-24.75	440.12	440.14
N	317+47.49	-24.75	440.25	440.33
O	317+57.49	-24.75	440.38	440.48
P	317+67.49	-24.75	440.50	440.59
Q	317+77.49	-24.75	440.61	440.67
℄ N. Brg. Pier 4	317+83.49	-24.75	440.68	440.70
℄ Pier 4	317+84.66	-24.75	440.69	440.71
℄ S. Brg. Pier 4	317+85.83	-24.75	440.70	440.72
R	317+95.83	-24.75	440.80	440.88
S	318+05.83	-24.75	440.90	441.00
T	318+15.83	-24.75	440.99	441.08
U	318+25.83	-24.75	441.07	441.12
℄ N. Brg. Pier 5	318+31.83	-24.75	441.11	441.13
℄ Pier 5	318+32.99	-24.75	441.12	441.14

BEAM 3

Location	Station	Offset	Theoretical Grade Elevations	Theoretical Grade Elevations Adjusted For Dead Load Deflection and Grinding
BK. N. Abut.	315+75.16	-17.50	437.11	437.13
℄ Brg. N. Abut.	315+77.33	-17.50	437.17	437.19
A	315+87.33	-17.50	437.41	437.49
B	315+97.33	-17.50	437.65	437.76
C	316+07.33	-17.50	437.88	437.98
D	316+17.33	-17.50	438.11	438.17
℄ N. Brg. Pier 1	316+23.99	-17.50	438.25	438.27
℄ Pier 1	316+25.16	-17.50	438.28	438.30
℄ S. Brg. Pier 1	316+26.33	-17.50	438.30	438.32
E	316+36.33	-17.50	438.51	438.66
F	316+46.33	-17.50	438.72	438.96
G	316+56.33	-17.50	438.91	439.19
H	316+66.33	-17.50	439.10	439.35
I	316+76.33	-17.50	439.29	439.44
℄ N. Brg. Pier 2	316+86.87	-17.50	439.47	439.50
℄ Pier 2	316+87.99	-17.50	439.49	439.51
℄ S. Brg. Pier 2	316+89.12	-17.50	439.51	439.53
J	316+99.12	-17.50	439.68	439.76
K	317+09.12	-17.50	439.84	439.94
L	317+19.12	-17.50	440.00	440.09
M	317+29.12	-17.50	440.14	440.20
℄ N. Brg. Pier 3	317+35.16	-17.50	440.23	440.25
℄ Pier 3	317+36.33	-17.50	440.25	440.27
℄ S. Brg. Pier 3	317+37.49	-17.50	440.26	440.28
N	317+47.49	-17.50	440.40	440.47
O	317+57.49	-17.50	440.52	440.63
P	317+67.49	-17.50	440.64	440.74
Q	317+77.49	-17.50	440.76	440.81
℄ N. Brg. Pier 4	317+83.49	-17.50	440.82	440.84
℄ Pier 4	317+84.66	-17.50	440.84	440.86
℄ S. Brg. Pier 4	317+85.83	-17.50	440.85	440.87
R	317+95.83	-17.50	440.95	441.02
S	318+05.83	-17.50	441.04	441.15
T	318+15.83	-17.50	441.13	441.23
U	318+25.83	-17.50	441.21	441.27
℄ N. Brg. Pier 5	318+31.83	-17.50	441.26	441.28
℄ Pier 5	318+32.99	-17.50	441.26	441.29

NOTE:

Girder 1 thru 7 offset is to the N.B. Bridge P.G.L.
Girder 8 thru 14 offset is to the S.B. Bridge P.G.L.

BEAM 4

Location	Station	Offset	Theoretical Grade Elevations	Theoretical Grade Elevations Adjusted For Dead Load Deflection and Grinding
BK. N. Abut.	315+75.16	-10.25	437.26	437.28
℄ Brg. N. Abut.	315+77.33	-10.25	437.31	437.33
A	315+87.33	-10.25	437.56	437.64
B	315+97.33	-10.25	437.80	437.90
C	316+07.33	-10.25	438.03	438.13
D	316+17.33	-10.25	438.25	438.31
℄ N. Brg. Pier 1	316+23.99	-10.25	438.40	438.42
℄ Pier 1	316+25.16	-10.25	438.42	438.44
℄ S. Brg. Pier 1	316+26.33	-10.25	438.45	438.47
E	316+36.33	-10.25	438.66	438.81
F	316+46.33	-10.25	438.86	439.10
G	316+56.33	-10.25	439.06	439.34
H	316+66.33	-10.25	439.25	439.49
I	316+76.33	-10.25	439.43	439.59
℄ N. Brg. Pier 2	316+86.87	-10.25	439.62	439.64
℄ Pier 2	316+87.99	-10.25	439.64	439.66
℄ S. Brg. Pier 2	316+89.12	-10.25	439.66	439.68
J	316+99.12	-10.25	439.83	439.90
K	317+09.12	-10.25	439.99	440.09
L	317+19.12	-10.25	440.14	440.24
M	317+29.12	-10.25	440.29	440.34
℄ N. Brg. Pier 3	317+35.16	-10.25	440.37	440.39
℄ Pier 3	317+36.33	-10.25	440.39	440.41
℄ S. Brg. Pier 3	317+37.49	-10.25	440.41	440.43
N	317+47.49	-10.25	440.54	440.62
O	317+57.49	-10.25	440.67	440.77
P	317+67.49	-10.25	440.79	440.88
Q	317+77.49	-10.25	440.90	440.96
℄ N. Brg. Pier 4	317+83.49	-10.25	440.97	440.99
℄ Pier 4	317+84.66	-10.25	440.98	441.00
℄ S. Brg. Pier 4	317+85.83	-10.25	440.99	441.01
R	317+95.83	-10.25	441.09	441.17
S	318+05.83	-10.25	441.19	441.29
T	318+15.83	-10.25	441.28	441.37
U	318+25.83	-10.25	441.36	441.41
℄ N. Brg. Pier 5	318+31.83	-10.25	441.40	441.42
℄ Pier 5	318+32.99	-10.25	441.41	441.43

BEAM 5

Location	Station	Offset	Theoretical Grade Elevations	Theoretical Grade Elevations Adjusted For Dead Load Deflection and Grinding
BK. N. Abut.	315+75.16	-3.00	437.40	437.42
℄ Brg. N. Abut.	315+77.33	-3.00	437.46	437.48
A	315+87.33	-3.00	437.70	437.78
B	315+97.33	-3.00	437.94	438.05
C	316+07.33	-3.00	438.17	438.27
D	316+17.33	-3.00	438.40	438.46
℄ N. Brg. Pier 1	316+23.99	-3.00	438.54	438.56
℄ Pier 1	316+25.16	-3.00	438.57	438.59
℄ S. Brg. Pier 1	316+26.33	-3.00	438.59	438.61
E	316+36.33	-3.00	438.80	438.95
F	316+46.33	-3.00	439.01	439.25
G	316+56.33	-3.00	439.20	439.48
H	316+66.33	-3.00	439.39	439.64
I	316+76.33	-3.00	439.58	439.73
℄ N. Brg. Pier 2	316+86.87	-3.00	439.76	439.79
℄ Pier 2	316+87.99	-3.00	439.78	439.80
℄ S. Brg. Pier 2	316+89.12	-3.00	439.80	439.82
J	316+99.12	-3.00	439.97	440.05
K	317+09.12	-3.00	440.13	440.23
L	317+19.12	-3.00	440.29	440.38
M	317+29.12	-3.00	440.43	440.49
℄ N. Brg. Pier 3	317+35.16	-3.00	440.52	440.54
℄ Pier 3	317+36.33	-3.00	440.54	440.56
℄ S. Brg. Pier 3	317+37.49	-3.00	440.55	440.57
N	317+47.49	-3.00	440.69	440.76
O	317+57.49	-3.00	440.81	440.92
P	317+67.49	-3.00	440.93	441.03
Q	317+77.49	-3.00	441.05	441.10
℄ N. Brg. Pier 4	317+83.49	-3.00	441.11	441.13
℄ Pier 4	317+84.66	-3.00	441.13	441.15
℄ S. Brg. Pier 4	317+85.83	-3.00	441.14	441.16
R	317+95.83	-3.00	441.24	441.31
S	318+05.83	-3.00	441.33	441.44
T	318+15.83	-3.00	441.42	441.52
U	318+25.83	-3.00	441.50	441.56
℄ N. Brg. Pier 5	318+31.83	-3.00	441.55	441.57
℄ Pier 5	318+32.99	-3.00	441.55	441.58

PGL NB BRIDGE

Location	Station	Offset	Theoretical Grade Elevations	Theoretical Grade Elevations Adjusted For Dead Load Deflection and Grinding
BK. N. Abut.	315+75.16	0.00	437.46	437.48
℄ Brg. N. Abut.	315+77.33	0.00	437.52	437.54
A	315+87.33	0.00	437.76	437.84
B	315+97.33	0.00	438.00	438.11
C	316+07.33	0.00	438.23	438.33
D	316+17.33	0.00	438.46	438.52
℄ N. Brg. Pier 1	316+23.99	0.00	438.60	438.62
℄ Pier 1	316+25.16	0.00	438.63	438.65
℄ S. Brg. Pier 1	316+26.33	0.00	438.65	438.67
E	316+36.33	0.00	438.86	439.01
F	316+46.33	0.00	439.07	439.31
G	316+56.33	0.00	439.26	439.54
H	316+66.33	0.00	439.45	439.70
I	316+76.33	0.00	439.64	439.79
℄ N. Brg. Pier 2	316+86.87	0.00	439.82	439.85
℄ Pier 2	316+87.99	0.00	439.84	439.86
℄ S. Brg. Pier 2	316+89.12	0.00	439.86	439.88
J	316+99.12	0.00	440.03	440.11
K	317+09.12	0.00	440.19	440.30
L	317+19.12	0.00	440.35	440.44
M	317+29.12	0.00	440.49	440.55
℄ N. Brg. Pier 3	317+35.16	0.00	440.58	440.60
℄ Pier 3	317+36.33	0.00	440.60	440.62
℄ S. Brg. Pier 3	317+37.49	0.00	440.61	440.63
N	317+47.49	0.00	440.75	440.82
O	317+57.49	0.00	440.87	440.98
P	317+67.49	0.00	440.99	441.09
Q	317+77.49	0.00	441.11	441.16
℄ N. Brg. Pier 4	317+83.49	0.00	441.17	441.19
℄ Pier 4	317+84.66	0.00	441.19	441.21
℄ S. Brg. Pier 4	317+85.83	0.00	441.20	441.22
R	317+95.83	0.00	441.30	441.37
S	318+05.83	0.00	441.39	441.50
T	318+15.83	0.00	441.48	441.58
U	318+25.83	0.00	441.56	441.62
℄ N. Brg. Pier 5	318+31.83	0.00	441.61	441.63
℄ Pier 5	318+32.99	0.00	441.61	441.64

NOTE:

Girder 1 thru 7 offset is to the N.B. Bridge P.G.L.
Girder 8 thru 14 offset is to the S.B. Bridge P.G.L.

BEAM 6

Location	Station	Offset	Theoretical Grade Elevations	Theoretical Grade Elevations Adjusted For Dead Load Deflection and Grinding
BK. N. Abut.	315+75.16	4.25	437.55	437.57
℄ Brg. N. Abut.	315+77.33	4.25	437.60	437.62
A	315+87.33	4.25	437.85	437.93
B	315+97.33	4.25	438.09	438.19
C	316+07.33	4.25	438.32	438.42
D	316+17.33	4.25	438.54	438.60
℄ N. Brg. Pier 1	316+23.99	4.25	438.69	438.71
℄ Pier 1	316+25.16	4.25	438.71	438.73
℄ S. Brg. Pier 1	316+26.33	4.25	438.74	438.76
E	316+36.33	4.25	438.95	439.10
F	316+46.33	4.25	439.15	439.39
G	316+56.33	4.25	439.35	439.63
H	316+66.33	4.25	439.54	439.78
I	316+76.33	4.25	439.72	439.88
℄ N. Brg. Pier 2	316+86.87	4.25	439.91	439.93
℄ Pier 2	316+87.99	4.25	439.93	439.95
℄ S. Brg. Pier 2	316+89.12	4.25	439.95	439.97
J	316+99.12	4.25	440.12	440.19
K	317+09.12	4.25	440.28	440.38
L	317+19.12	4.25	440.43	440.53
M	317+29.12	4.25	440.58	440.63
℄ N. Brg. Pier 3	317+35.16	4.25	440.66	440.68
℄ Pier 3	317+36.33	4.25	440.68	440.70
℄ S. Brg. Pier 3	317+37.49	4.25	440.70	440.72
N	317+47.49	4.25	440.83	440.91
O	317+57.49	4.25	440.96	441.06
P	317+67.49	4.25	441.08	441.17
Q	317+77.49	4.25	441.19	441.25
℄ N. Brg. Pier 4	317+83.49	4.25	441.26	441.28
℄ Pier 4	317+84.66	4.25	441.27	441.29
℄ S. Brg. Pier 4	317+85.83	4.25	441.28	441.30
R	317+95.83	4.25	441.38	441.46
S	318+05.83	4.25	441.48	441.58
T	318+15.83	4.25	441.57	441.66
U	318+25.83	4.25	441.65	441.70
℄ N. Brg. Pier 5	318+31.83	4.25	441.69	441.71
℄ Pier 5	318+32.99	4.25	441.70	441.72

BEAM 7

Location	Station	Offset	Theoretical Grade Elevations	Theoretical Grade Elevations Adjusted For Dead Load Deflection and Grinding
BK. N. Abut.	315+75.16	11.50	437.69	437.71
℄ Brg. N. Abut.	315+77.33	11.50	437.75	437.77
A	315+87.33	11.50	437.99	438.08
B	315+97.33	11.50	438.23	438.35
C	316+07.33	11.50	438.46	438.57
D	316+17.33	11.50	438.69	438.75
℄ N. Brg. Pier 1	316+23.99	11.50	438.83	438.85
℄ Pier 1	316+25.16	11.50	438.86	438.88
℄ S. Brg. Pier 1	316+26.33	11.50	438.88	438.90
E	316+36.33	11.50	439.09	439.25
F	316+46.33	11.50	439.30	439.56
G	316+56.33	11.50	439.49	439.79
H	316+66.33	11.50	439.68	439.95
I	316+76.33	11.50	439.87	440.04
℄ N. Brg. Pier 2	316+86.87	11.50	440.05	440.08
℄ Pier 2	316+87.99	11.50	440.07	440.09
℄ S. Brg. Pier 2	316+89.12	11.50	440.09	440.11
J	316+99.12	11.50	440.26	440.34
K	317+09.12	11.50	440.42	440.53
L	317+19.12	11.50	440.58	440.68
M	317+29.12	11.50	440.72	440.78
℄ N. Brg. Pier 3	317+35.16	11.50	440.81	440.83
℄ Pier 3	317+36.33	11.50	440.83	440.85
℄ S. Brg. Pier 3	317+37.49	11.50	440.84	440.86
N	317+47.49	11.50	440.98	441.05
O	317+57.49	11.50	441.10	441.21
P	317+67.49	11.50	441.22	441.33
Q	317+77.49	11.50	441.34	441.40
℄ N. Brg. Pier 4	317+83.49	11.50	441.40	441.42
℄ Pier 4	317+84.66	11.50	441.42	441.44
℄ S. Brg. Pier 4	317+85.83	11.50	441.43	441.45
R	317+95.83	11.50	441.53	441.61
S	318+05.83	11.50	441.62	441.74
T	318+15.83	11.50	441.71	441.82
U	318+25.83	11.50	441.79	441.85
℄ N. Brg. Pier 5	318+31.83	11.50	441.84	441.86
℄ Pier 5	318+32.99	11.50	441.84	441.87

BEAM 8

Location	Station	Offset	Theoretical Grade Elevations	Theoretical Grade Elevations Adjusted For Dead Load Deflection and Grinding
BK. N. Abut.	315+75.16	-11.50	437.69	437.71
℄ Brg. N. Abut.	315+77.33	-11.50	437.75	437.77
A	315+87.33	-11.50	437.99	438.08
B	315+97.33	-11.50	438.23	438.35
C	316+07.33	-11.50	438.46	438.57
D	316+17.33	-11.50	438.69	438.75
℄ N. Brg. Pier 1	316+23.99	-11.50	438.83	438.85
℄ Pier 1	316+25.16	-11.50	438.86	438.88
℄ S. Brg. Pier 1	316+26.33	-11.50	438.88	438.90
E	316+36.33	-11.50	439.09	439.25
F	316+46.33	-11.50	439.30	439.56
G	316+56.33	-11.50	439.49	439.79
H	316+66.33	-11.50	439.68	439.95
I	316+76.33	-11.50	439.87	440.04
℄ N. Brg. Pier 2	316+86.87	-11.50	440.05	440.08
℄ Pier 2	316+87.99	-11.50	440.07	440.09
℄ S. Brg. Pier 2	316+89.12	-11.50	440.09	440.11
J	316+99.12	-11.50	440.26	440.34
K	317+09.12	-11.50	440.42	440.53
L	317+19.12	-11.50	440.58	440.68
M	317+29.12	-11.50	440.72	440.78
℄ N. Brg. Pier 3	317+35.16	-11.50	440.81	440.83
℄ Pier 3	317+36.33	-11.50	440.83	440.85
℄ S. Brg. Pier 3	317+37.49	-11.50	440.84	440.86
N	317+47.49	-11.50	440.98	441.05
O	317+57.49	-11.50	441.10	441.21
P	317+67.49	-11.50	441.22	441.33
Q	317+77.49	-11.50	441.34	441.40
℄ N. Brg. Pier 4	317+83.49	-11.50	441.40	441.42
℄ Pier 4	317+84.66	-11.50	441.42	441.44
℄ S. Brg. Pier 4	317+85.83	-11.50	441.43	441.45
R	317+95.83	-11.50	441.53	441.61
S	318+05.83	-11.50	441.62	441.74
T	318+15.83	-11.50	441.71	441.82
U	318+25.83	-11.50	441.79	441.85
℄ N. Brg. Pier 5	318+31.83	-11.50	441.84	441.86
℄ Pier 5	318+32.99	-11.50	441.84	441.87

NOTE:

Girder 1 thru 7 offset is to the N.B. Bridge P.G.L.
Girder 8 thru 14 offset is to the S.B. Bridge P.G.L.

BEAM 9

Location	Station	Offset	Theoretical Grade Elevations	Theoretical Grade Elevations Adjusted For Dead Load Deflection and Grinding
BK. N. Abut.	315+75.16	-4.25	437.55	437.57
℄ Brg. N. Abut.	315+77.33	-4.25	437.60	437.62
A	315+87.33	-4.25	437.85	437.93
B	315+97.33	-4.25	438.09	438.19
C	316+07.33	-4.25	438.32	438.42
D	316+17.33	-4.25	438.54	438.60
℄ N. Brg. Pier 1	316+23.99	-4.25	438.69	438.71
℄ Pier 1	316+25.16	-4.25	438.71	438.73
℄ S. Brg. Pier 1	316+26.33	-4.25	438.74	438.76
E	316+36.33	-4.25	438.95	439.10
F	316+46.33	-4.25	439.15	439.39
G	316+56.33	-4.25	439.35	439.63
H	316+66.33	-4.25	439.54	439.78
I	316+76.33	-4.25	439.72	439.88
℄ N. Brg. Pier 2	316+86.87	-4.25	439.91	439.93
℄ Pier 2	316+87.99	-4.25	439.93	439.95
℄ S. Brg. Pier 2	316+89.12	-4.25	439.95	439.97
J	316+99.12	-4.25	440.12	440.19
K	317+09.12	-4.25	440.28	440.38
L	317+19.12	-4.25	440.43	440.53
M	317+29.12	-4.25	440.58	440.63
℄ N. Brg. Pier 3	317+35.16	-4.25	440.66	440.68
℄ Pier 3	317+36.33	-4.25	440.68	440.70
℄ S. Brg. Pier 3	317+37.49	-4.25	440.70	440.72
N	317+47.49	-4.25	440.83	440.91
O	317+57.49	-4.25	440.96	441.06
P	317+67.49	-4.25	441.08	441.17
Q	317+77.49	-4.25	441.19	441.25
℄ N. Brg. Pier 4	317+83.49	-4.25	441.26	441.28
℄ Pier 4	317+84.66	-4.25	441.27	441.29
℄ S. Brg. Pier 4	317+85.83	-4.25	441.28	441.30
R	317+95.83	-4.25	441.38	441.46
S	318+05.83	-4.25	441.48	441.58
T	318+15.83	-4.25	441.57	441.66
U	318+25.83	-4.25	441.65	441.70
℄ N. Brg. Pier 5	318+31.83	-4.25	441.69	441.71
℄ Pier 5	318+32.99	-4.25	441.70	441.72

PGL SB BRIDGE

Location	Station	Offset	Theoretical Grade Elevations	Theoretical Grade Elevations Adjusted For Dead Load Deflection and Grinding
BK. N. Abut.	315+75.16	0.00	437.46	437.48
℄ Brg. N. Abut.	315+77.33	0.00	437.52	437.54
A	315+87.33	0.00	437.76	437.84
B	315+97.33	0.00	438.00	438.11
C	316+07.33	0.00	438.23	438.33
D	316+17.33	0.00	438.46	438.52
℄ N. Brg. Pier 1	316+23.99	0.00	438.60	438.62
℄ Pier 1	316+25.16	0.00	438.63	438.65
℄ S. Brg. Pier 1	316+26.33	0.00	438.65	438.67
E	316+36.33	0.00	438.86	439.01
F	316+46.33	0.00	439.07	439.31
G	316+56.33	0.00	439.26	439.54
H	316+66.33	0.00	439.45	439.70
I	316+76.33	0.00	439.64	439.79
℄ N. Brg. Pier 2	316+86.87	0.00	439.82	439.85
℄ Pier 2	316+87.99	0.00	439.84	439.86
℄ S. Brg. Pier 2	316+89.12	0.00	439.86	439.88
J	316+99.12	0.00	440.03	440.11
K	317+09.12	0.00	440.19	440.30
L	317+19.12	0.00	440.35	440.44
M	317+29.12	0.00	440.49	440.55
℄ N. Brg. Pier 3	317+35.16	0.00	440.58	440.60
℄ Pier 3	317+36.33	0.00	440.60	440.62
℄ S. Brg. Pier 3	317+37.49	0.00	440.61	440.63
N	317+47.49	0.00	440.75	440.82
O	317+57.49	0.00	440.87	440.98
P	317+67.49	0.00	440.99	441.09
Q	317+77.49	0.00	441.11	441.16
℄ N. Brg. Pier 4	317+83.49	0.00	441.17	441.19
℄ Pier 4	317+84.66	0.00	441.19	441.21
℄ S. Brg. Pier 4	317+85.83	0.00	441.20	441.22
R	317+95.83	0.00	441.30	441.37
S	318+05.83	0.00	441.39	441.50
T	318+15.83	0.00	441.48	441.58
U	318+25.83	0.00	441.56	441.62
℄ N. Brg. Pier 5	318+31.83	0.00	441.61	441.63
℄ Pier 5	318+32.99	0.00	441.61	441.64

BEAM 10

Location	Station	Offset	Theoretical Grade Elevations	Theoretical Grade Elevations Adjusted For Dead Load Deflection and Grinding
BK. N. Abut.	315+75.16	3.00	437.40	437.42
℄ Brg. N. Abut.	315+77.33	3.00	437.46	437.48
A	315+87.33	3.00	437.70	437.78
B	315+97.33	3.00	437.94	438.05
C	316+07.33	3.00	438.17	438.27
D	316+17.33	3.00	438.40	438.46
℄ N. Brg. Pier 1	316+23.99	3.00	438.54	438.56
℄ Pier 1	316+25.16	3.00	438.57	438.59
℄ S. Brg. Pier 1	316+26.33	3.00	438.59	438.61
E	316+36.33	3.00	438.80	438.95
F	316+46.33	3.00	439.01	439.25
G	316+56.33	3.00	439.20	439.48
H	316+66.33	3.00	439.39	439.64
I	316+76.33	3.00	439.58	439.73
℄ N. Brg. Pier 2	316+86.87	3.00	439.76	439.79
℄ Pier 2	316+87.99	3.00	439.78	439.80
℄ S. Brg. Pier 2	316+89.12	3.00	439.80	439.82
J	316+99.12	3.00	439.97	440.05
K	317+09.12	3.00	440.13	440.23
L	317+19.12	3.00	440.29	440.38
M	317+29.12	3.00	440.43	440.49
℄ N. Brg. Pier 3	317+35.16	3.00	440.52	440.54
℄ Pier 3	317+36.33	3.00	440.54	440.56
℄ S. Brg. Pier 3	317+37.49	3.00	440.55	440.57
N	317+47.49	3.00	440.69	440.76
O	317+57.49	3.00	440.81	440.92
P	317+67.49	3.00	440.93	441.03
Q	317+77.49	3.00	441.05	441.10
℄ N. Brg. Pier 4	317+83.49	3.00	441.11	441.13
℄ Pier 4	317+84.66	3.00	441.13	441.15
℄ S. Brg. Pier 4	317+85.83	3.00	441.14	441.16
R	317+95.83	3.00	441.24	441.31
S	318+05.83	3.00	441.33	441.44
T	318+15.83	3.00	441.42	441.52
U	318+25.83	3.00	441.50	441.56
℄ N. Brg. Pier 5	318+31.83	3.00	441.55	441.57
℄ Pier 5	318+32.99	3.00	441.55	441.58

NOTE:

Girder 1 thru 7 offset is to the N.B. Bridge P.G.L.
Girder 8 thru 14 offset is to the S.B. Bridge P.G.L.

BEAM 11

Location	Station	Offset	Theoretical Grade Elevations	Theoretical Grade Elevations Adjusted For Dead Load Deflection and Grinding
BK. N. Abut.	315+75.16	10.25	437.26	437.28
℄ Brg. N. Abut.	315+77.33	10.25	437.31	437.33
A	315+87.33	10.25	437.56	437.64
B	315+97.33	10.25	437.80	437.90
C	316+07.33	10.25	438.03	438.13
D	316+17.33	10.25	438.25	438.31
℄ N. Brg. Pier 1	316+23.99	10.25	438.40	438.42
℄ Pier 1	316+25.16	10.25	438.42	438.44
℄ S. Brg. Pier 1	316+26.33	10.25	438.45	438.47
E	316+36.33	10.25	438.66	438.81
F	316+46.33	10.25	438.86	439.10
G	316+56.33	10.25	439.06	439.34
H	316+66.33	10.25	439.25	439.49
I	316+76.33	10.25	439.43	439.59
℄ N. Brg. Pier 2	316+86.87	10.25	439.62	439.64
℄ Pier 2	316+87.99	10.25	439.64	439.66
℄ S. Brg. Pier 2	316+89.12	10.25	439.66	439.68
J	316+99.12	10.25	439.83	439.90
K	317+09.12	10.25	439.99	440.09
L	317+19.12	10.25	440.14	440.24
M	317+29.12	10.25	440.29	440.34
℄ N. Brg. Pier 3	317+35.16	10.25	440.37	440.39
℄ Pier 3	317+36.33	10.25	440.39	440.41
℄ S. Brg. Pier 3	317+37.49	10.25	440.41	440.43
N	317+47.49	10.25	440.54	440.62
O	317+57.49	10.25	440.67	440.77
P	317+67.49	10.25	440.79	440.88
Q	317+77.49	10.25	440.90	440.96
℄ N. Brg. Pier 4	317+83.49	10.25	440.97	440.99
℄ Pier 4	317+84.66	10.25	440.98	441.00
℄ S. Brg. Pier 4	317+85.83	10.25	440.99	441.01
R	317+95.83	10.25	441.09	441.17
S	318+05.83	10.25	441.19	441.29
T	318+15.83	10.25	441.28	441.37
U	318+25.83	10.25	441.36	441.41
℄ N. Brg. Pier 5	318+31.83	10.25	441.40	441.42
℄ Pier 5	318+32.99	10.25	441.41	441.43

BEAM 12

Location	Station	Offset	Theoretical Grade Elevations	Theoretical Grade Elevations Adjusted For Dead Load Deflection and Grinding
BK. N. Abut.	315+75.16	17.50	437.11	437.13
℄ Brg. N. Abut.	315+77.33	17.50	437.17	437.19
A	315+87.33	17.50	437.41	437.49
B	315+97.33	17.50	437.65	437.76
C	316+07.33	17.50	437.88	437.98
D	316+17.33	17.50	438.11	438.17
℄ N. Brg. Pier 1	316+23.99	17.50	438.25	438.27
℄ Pier 1	316+25.16	17.50	438.28	438.30
℄ S. Brg. Pier 1	316+26.33	17.50	438.30	438.32
E	316+36.33	17.50	438.51	438.66
F	316+46.33	17.50	438.72	438.96
G	316+56.33	17.50	438.91	439.19
H	316+66.33	17.50	439.10	439.35
I	316+76.33	17.50	439.29	439.44
℄ N. Brg. Pier 2	316+86.87	17.50	439.47	439.50
℄ Pier 2	316+87.99	17.50	439.49	439.51
℄ S. Brg. Pier 2	316+89.12	17.50	439.51	439.53
J	316+99.12	17.50	439.68	439.76
K	317+09.12	17.50	439.84	439.94
L	317+19.12	17.50	440.00	440.09
M	317+29.12	17.50	440.14	440.20
℄ N. Brg. Pier 3	317+35.16	17.50	440.23	440.25
℄ Pier 3	317+36.33	17.50	440.25	440.27
℄ S. Brg. Pier 3	317+37.49	17.50	440.26	440.28
N	317+47.49	17.50	440.40	440.47
O	317+57.49	17.50	440.52	440.63
P	317+67.49	17.50	440.64	440.74
Q	317+77.49	17.50	440.76	440.81
℄ N. Brg. Pier 4	317+83.49	17.50	440.82	440.84
℄ Pier 4	317+84.66	17.50	440.84	440.86
℄ S. Brg. Pier 4	317+85.83	17.50	440.85	440.87
R	317+95.83	17.50	440.95	441.02
S	318+05.83	17.50	441.04	441.15
T	318+15.83	17.50	441.13	441.23
U	318+25.83	17.50	441.21	441.27
℄ N. Brg. Pier 5	318+31.83	17.50	441.26	441.28
℄ Pier 5	318+32.99	17.50	441.26	441.29

BEAM 13

Location	Station	Offset	Theoretical Grade Elevations	Theoretical Grade Elevations Adjusted For Dead Load Deflection and Grinding
BK. N. Abut.	315+75.16	24.75	436.97	436.99
℄ Brg. N. Abut.	315+77.33	24.75	437.02	437.04
A	315+87.33	24.75	437.27	437.35
B	315+97.33	24.75	437.51	437.61
C	316+07.33	24.75	437.74	437.84
D	316+17.33	24.75	437.96	438.02
℄ N. Brg. Pier 1	316+23.99	24.75	438.11	438.13
℄ Pier 1	316+25.16	24.75	438.13	438.15
℄ S. Brg. Pier 1	316+26.33	24.75	438.16	438.18
E	316+36.33	24.75	438.37	438.52
F	316+46.33	24.75	438.57	438.81
G	316+56.33	24.75	438.77	439.05
H	316+66.33	24.75	438.96	439.20
I	316+76.33	24.75	439.14	439.30
℄ N. Brg. Pier 2	316+86.87	24.75	439.33	439.35
℄ Pier 2	316+87.99	24.75	439.35	439.37
℄ S. Brg. Pier 2	316+89.12	24.75	439.37	439.39
J	316+99.12	24.75	439.54	439.61
K	317+09.12	24.75	439.70	439.80
L	317+19.12	24.75	439.85	439.95
M	317+29.12	24.75	440.00	440.05
℄ N. Brg. Pier 3	317+35.16	24.75	440.08	440.10
℄ Pier 3	317+36.33	24.75	440.10	440.12
℄ S. Brg. Pier 3	317+37.49	24.75	440.12	440.14
N	317+47.49	24.75	440.25	440.33
O	317+57.49	24.75	440.38	440.48
P	317+67.49	24.75	440.50	440.59
Q	317+77.49	24.75	440.61	440.67
℄ N. Brg. Pier 4	317+83.49	24.75	440.68	440.70
℄ Pier 4	317+84.66	24.75	440.69	440.71
℄ S. Brg. Pier 4	317+85.83	24.75	440.70	440.72
R	317+95.83	24.75	440.80	440.88
S	318+05.83	24.75	440.90	441.00
T	318+15.83	24.75	440.99	441.08
U	318+25.83	24.75	441.07	441.12
℄ N. Brg. Pier 5	318+31.83	24.75	441.11	441.13
℄ Pier 5	318+32.99	24.75	441.12	441.14

NOTE:

Girder 1 thru 7 offset is to the N.B. Bridge P.G.L.
Girder 8 thru 14 offset is to the S.B. Bridge P.G.L.

BEAM 14

Location	Station	Offset	Theoretical Grade Elevations	Theoretical Grade Elevations Adjusted For Dead Load Deflection and Grinding
BK. N. Abut.	315+75.16	32.00	436.82	436.84
℄ Brg. N. Abut.	315+77.33	32.00	436.88	436.90
A	315+87.33	32.00	437.12	437.21
B	315+97.33	32.00	437.36	437.48
C	316+07.33	32.00	437.59	437.70
D	316+17.33	32.00	437.82	437.88
℄ N. Brg. Pier 1	316+23.99	32.00	437.96	437.98
℄ Pier 1	316+25.16	32.00	437.99	438.01
℄ S. Brg. Pier 1	316+26.33	32.00	438.01	438.03
E	316+36.33	32.00	438.22	438.38
F	316+46.33	32.00	438.43	438.69
G	316+56.33	32.00	438.62	438.92
H	316+66.33	32.00	438.81	439.08
I	316+76.33	32.00	439.00	439.17
℄ N. Brg. Pier 2	316+86.87	32.00	439.18	439.21
℄ Pier 2	316+87.99	32.00	439.20	439.22
℄ S. Brg. Pier 2	316+89.12	32.00	439.22	439.24
J	316+99.12	32.00	439.39	439.47
K	317+09.12	32.00	439.55	439.66
L	317+19.12	32.00	439.71	439.81
M	317+29.12	32.00	439.85	439.91
℄ N. Brg. Pier 3	317+35.16	32.00	439.94	439.96
℄ Pier 3	317+36.33	32.00	439.96	439.98
℄ S. Brg. Pier 3	317+37.49	32.00	439.97	439.99
N	317+47.49	32.00	440.11	440.18
O	317+57.49	32.00	440.23	440.34
P	317+67.49	32.00	440.35	440.46
Q	317+77.49	32.00	440.47	440.53
℄ N. Brg. Pier 4	317+83.49	32.00	440.53	440.55
℄ Pier 4	317+84.66	32.00	440.55	440.57
℄ S. Brg. Pier 4	317+85.83	32.00	440.56	440.58
R	317+95.83	32.00	440.66	440.74
S	318+05.83	32.00	440.75	440.87
T	318+15.83	32.00	440.84	440.95
U	318+25.83	32.00	440.92	440.98
℄ N. Brg. Pier 5	318+31.83	32.00	440.97	440.99
℄ Pier 5	318+32.99	32.00	440.97	441.00

NOTE:

Girder 1 thru 7 offset is to the N.B. Bridge P.G.L.
Girder 8 thru 14 offset is to the S.B. Bridge P.G.L.

BEAM 1

Location	Station	Offset	Theoretical Grade Elevations	Theoretical Grade Elevations Adjusted For Dead Load Deflection and Grinding
℄ Pier 5	318+32.99	-32.00	440.97	441.00
℄ S. Brg. Pier 5	318+34.12	-32.00	440.98	441.00
V	318+44.12	-32.00	441.05	441.07
℄ N. Brg. Pier 6	318+50.91	-32.00	441.09	441.11
℄ Pier 6	318+52.30	-32.00	441.10	441.12

BEAM 2

Location	Station	Offset	Theoretical Grade Elevations	Theoretical Grade Elevations Adjusted For Dead Load Deflection and Grinding
℄ Pier 5	318+32.99	-24.75	441.12	441.14
℄ S. Brg. Pier 5	318+34.12	-24.75	441.13	441.15
V	318+44.12	-24.75	441.20	441.22
℄ N. Brg. Pier 6	318+54.29	-24.75	441.26	441.28
℄ Pier 6	318+55.68	-24.75	441.27	441.29

BEAM 3

Location	Station	Offset	Theoretical Grade Elevations	Theoretical Grade Elevations Adjusted For Dead Load Deflection and Grinding
℄ Pier 5	318+32.99	-17.50	441.26	441.29
℄ S. Brg. Pier 5	318+34.12	-17.50	441.27	441.29
V	318+44.12	-17.50	441.34	441.37
℄ N. Brg. Pier 6	318+57.67	-17.50	441.42	441.44
℄ Pier 6	318+59.06	-17.50	441.43	441.45

BEAM 4

Location	Station	Offset	Theoretical Grade Elevations	Theoretical Grade Elevations Adjusted For Dead Load Deflection and Grinding
℄ Pier 5	318+32.99	-10.25	441.41	441.43
℄ S. Brg. Pier 5	318+34.12	-10.25	441.42	441.44
V	318+44.12	-10.25	441.49	441.52
W	318+54.12	-10.25	441.55	441.58
℄ N. Brg. Pier 6	318+61.06	-10.25	441.59	441.61
℄ Pier 6	318+62.44	-10.25	441.59	441.61

BEAM 5

Location	Station	Offset	Theoretical Grade Elevations	Theoretical Grade Elevations Adjusted For Dead Load Deflection and Grinding
℄ Pier 5	318+32.99	-3.00	441.55	441.58
℄ S. Brg. Pier 5	318+34.12	-3.00	441.56	441.58
V	318+44.12	-3.00	441.63	441.67
W	318+54.12	-3.00	441.69	441.73
℄ N. Brg. Pier 6	318+64.44	-3.00	441.75	441.77
℄ Pier 6	318+65.82	-3.00	441.75	441.78

PGL NB BRIDGE

Location	Station	Offset	Theoretical Grade Elevations	Theoretical Grade Elevations Adjusted For Dead Load Deflection and Grinding
℄ Pier 5	318+32.99	0.00	441.61	441.64
℄ S. Brg. Pier 5	318+34.12	0.00	441.62	441.64
V	318+44.12	0.00	441.69	441.73
W	318+54.12	0.00	441.75	441.79
℄ N. Brg. Pier 6	318+65.84	0.00	441.81	441.84
℄ Pier 6	318+67.22	0.00	441.82	441.84

BEAM 6

Location	Station	Offset	Theoretical Grade Elevations	Theoretical Grade Elevations Adjusted For Dead Load Deflection and Grinding
℄ Pier 5	318+32.99	4.25	441.70	441.72
℄ S. Brg. Pier 5	318+34.12	4.25	441.71	441.73
V	318+44.12	4.25	441.78	441.82
W	318+54.12	4.25	441.84	441.88
℄ N. Brg. Pier 6	318+67.82	4.25	441.91	441.93
℄ Pier 6	318+69.20	4.25	441.92	441.94

BEAM 7

Location	Station	Offset	Theoretical Grade Elevations	Theoretical Grade Elevations Adjusted For Dead Load Deflection and Grinding
℄ Pier 5	318+32.99	11.50	441.84	441.87
℄ S. Brg. Pier 5	318+34.12	11.50	441.85	441.87
V	318+44.12	11.50	441.92	441.97
W	318+54.12	11.50	441.98	442.04
X	318+64.12	11.50	442.04	442.08
℄ N. Brg. Pier 6	318+71.20	11.50	442.07	442.09
℄ Pier 6	318+72.58	11.50	442.08	442.10

NOTE:

Girder 1 thru 7 offset is to the N.B. Bridge P.G.L.
Girder 8 thru 14 offset is to the S.B. Bridge P.G.L.

BEAM 8

Location	Station	Offset	Theoretical Grade Elevations	Theoretical Grade Elevations Adjusted For Dead Load Deflection and Grinding
℄ Pier 5	318+32.99	-11.50	441.84	441.87
℄ S. Brg. Pier 5	318+34.12	-11.50	441.85	441.87
V	318+44.12	-11.50	441.92	441.99
W	318+54.12	-11.50	441.98	442.07
X	318+64.12	-11.50	442.04	442.10
℄ N. Brg. Pier 6	318+74.46	-11.50	442.08	442.11
℄ Pier 6	318+75.85	-11.50	442.09	442.11

BEAM 9

Location	Station	Offset	Theoretical Grade Elevations	Theoretical Grade Elevations Adjusted For Dead Load Deflection and Grinding
℄ Pier 5	318+32.99	-4.25	441.70	441.72
℄ S. Brg. Pier 5	318+34.12	-4.25	441.71	441.73
V	318+44.12	-4.25	441.78	441.85
W	318+54.12	-4.25	441.84	441.93
X	318+64.12	-4.25	441.89	441.98
℄ N. Brg. Pier 6	318+77.84	-4.25	441.95	441.98
℄ Pier 6	318+79.23	-4.25	441.96	441.98

PGL SB BRIDGE

Location	Station	Offset	Theoretical Grade Elevations	Theoretical Grade Elevations Adjusted For Dead Load Deflection and Grinding
℄ Pier 5	318+32.99	0.00	441.61	441.64
℄ S. Brg. Pier 5	318+34.12	0.00	441.62	441.64
V	318+44.12	0.00	441.69	441.77
W	318+54.12	0.00	441.75	441.86
X	318+64.12	0.00	441.81	441.91
Y	318+74.12	0.00	441.85	441.91
℄ N. Brg. Pier 6	318+79.82	0.00	441.88	441.90
℄ Pier 6	318+81.21	0.00	441.88	441.90

BEAM 10

Location	Station	Offset	Theoretical Grade Elevations	Theoretical Grade Elevations Adjusted For Dead Load Deflection and Grinding
℄ Pier 5	318+32.99	3.00	441.55	441.58
℄ S. Brg. Pier 5	318+34.12	3.00	441.56	441.58
V	318+44.12	3.00	441.63	441.71
W	318+54.12	3.00	441.69	441.81
X	318+64.12	3.00	441.75	441.86
Y	318+74.12	3.00	441.79	441.86
℄ N. Brg. Pier 6	318+81.22	3.00	441.82	441.84
℄ Pier 6	318+82.61	3.00	441.83	441.85

BEAM 11

Location	Station	Offset	Theoretical Grade Elevations	Theoretical Grade Elevations Adjusted For Dead Load Deflection and Grinding
℄ Pier 5	318+32.99	10.25	441.41	441.43
℄ S. Brg. Pier 5	318+34.12	10.25	441.42	441.44
V	318+44.12	10.25	441.49	441.58
W	318+54.12	10.25	441.55	441.69
X	318+64.12	10.25	441.61	441.75
Y	318+74.12	10.25	441.65	441.75
℄ N. Brg. Pier 6	318+84.60	10.25	441.70	441.72
℄ Pier 6	318+85.99	10.25	441.70	441.72

BEAM 12

Location	Station	Offset	Theoretical Grade Elevations	Theoretical Grade Elevations Adjusted For Dead Load Deflection and Grinding
℄ Pier 5	318+32.99	17.50	441.26	441.29
℄ S. Brg. Pier 5	318+34.12	17.50	441.27	441.29
V	318+44.12	17.50	441.34	441.45
W	318+54.12	17.50	441.40	441.58
X	318+64.12	17.50	441.46	441.64
Y	318+74.12	17.50	441.50	441.65
℄ N. Brg. Pier 6	318+87.98	17.50	441.56	441.58
℄ Pier 6	318+89.37	17.50	441.56	441.58

BEAM 13

Location	Station	Offset	Theoretical Grade Elevations	Theoretical Grade Elevations Adjusted For Dead Load Deflection and Grinding
℄ Pier 5	318+32.99	24.75	441.12	441.14
℄ S. Brg. Pier 5	318+34.12	24.75	441.13	441.15
V	318+44.12	24.75	441.20	441.33
W	318+54.12	24.75	441.26	441.46
X	318+64.12	24.75	441.31	441.54
Y	318+74.12	24.75	441.36	441.55
Z	318+84.12	24.75	441.40	441.50
℄ N. Brg. Pier 6	318+91.37	24.75	441.42	441.44
℄ Pier 6	318+92.75	24.75	441.43	441.45

BEAM 14

Location	Station	Offset	Theoretical Grade Elevations	Theoretical Grade Elevations Adjusted For Dead Load Deflection and Grinding
℄ Pier 5	318+32.99	32.00	440.97	441.00
℄ S. Brg. Pier 5	318+34.12	32.00	440.98	441.00
V	318+44.12	32.00	441.05	441.21
W	318+54.12	32.00	441.11	441.38
X	318+64.12	32.00	441.17	441.47
Y	318+74.12	32.00	441.21	441.49
Z	318+84.12	32.00	441.25	441.43
℄ N. Brg. Pier 6	318+94.74	32.00	441.29	441.31
℄ Pier 6	318+96.13	32.00	441.29	441.31

NOTE:

Girder 1 thru 7 offset is to the N.B. Bridge P.G.L.
Girder 8 thru 14 offset is to the S.B. Bridge P.G.L.

BEAM 1

Location	Station	Offset	Theoretical Grade Elevations	Theoretical Grade Elevations Adjusted For Dead Load Deflection and Grinding
℄ Pier 6	318+52.30	-32.00	441.10	441.12
℄ S. Brg. Pier 6	318+53.59	-32.00	441.11	441.13
AA	318+63.59	-32.00	441.16	441.30
BB	318+73.59	-32.00	441.21	441.43
CC	318+83.59	-32.00	441.25	441.49
DD	318+93.59	-32.00	441.29	441.48
EE	319+03.59	-32.00	441.31	441.41
℄ N. Brg. Pier 7	319+10.21	-32.00	441.33	441.35
℄ Pier 7	319+11.38	-32.00	441.33	441.35
℄ S. Brg. Pier 7	319+12.54	-32.00	441.33	441.35
FF	319+22.54	-32.00	441.35	441.47
GG	319+32.54	-32.00	441.35	441.55
HH	319+42.54	-32.00	441.35	441.57
II	319+52.54	-32.00	441.35	441.52
JJ	319+62.54	-32.00	441.33	441.42
℄ N. Brg. Pier 8	319+68.29	-32.00	441.32	441.34
℄ Pier 8	319+69.46	-32.00	441.32	441.34
℄ S. Brg. Pier 8	319+70.62	-32.00	441.32	441.34
KK	319+80.62	-32.00	441.29	441.40
LL	319+90.62	-32.00	441.26	441.43
MM	320+00.62	-32.00	441.22	441.40
NN	320+10.62	-32.00	441.17	441.31
℄ N. Brg. Pier 9	320+23.92	-32.00	441.10	441.12
℄ Pier 9	320+25.05	-32.00	441.09	441.11
℄ S. Brg. Pier 9	320+26.17	-32.00	441.08	441.10
OO	320+36.17	-32.00	441.02	441.16
PP	320+46.17	-32.00	440.95	441.17
QQ	320+56.17	-32.00	440.87	441.11
RR	320+66.17	-32.00	440.79	440.99
SS	320+76.17	-32.00	440.69	440.80
℄ N. Brg. Pier 10	320+83.63	-32.00	440.62	440.64
℄ Pier 10	320+84.80	-32.00	440.61	440.63
℄ S. Brg. Pier 10	320+85.96	-32.00	440.60	440.62
TT	320+95.96	-32.00	440.49	440.63
UU	321+05.96	-32.00	440.38	440.59
VV	321+15.96	-32.00	440.26	440.50
WW	321+25.96	-32.00	440.13	440.33
XX	321+35.96	-32.00	440.00	440.10
℄ Brg. S. Abut.	321+42.75	-32.00	439.91	439.93
BK. S. Abut.	321+45.46	-32.00	439.87	439.89

BEAM 2

Location	Station	Offset	Theoretical Grade Elevations	Theoretical Grade Elevations Adjusted For Dead Load Deflection and Grinding
℄ Pier 6	318+55.68	-24.75	441.27	441.29
℄ S. Brg. Pier 6	318+56.97	-24.75	441.27	441.29
AA	318+66.97	-24.75	441.33	441.45
BB	318+76.97	-24.75	441.37	441.57
CC	318+86.97	-24.75	441.41	441.63
DD	318+96.97	-24.75	441.44	441.62
EE	319+06.97	-24.75	441.47	441.56
℄ N. Brg. Pier 7	319+13.59	-24.75	441.48	441.50
℄ Pier 7	319+14.76	-24.75	441.48	441.50
℄ S. Brg. Pier 7	319+15.93	-24.75	441.48	441.50
FF	319+25.93	-24.75	441.49	441.61
GG	319+35.93	-24.75	441.50	441.68
HH	319+45.93	-24.75	441.50	441.70
II	319+55.93	-24.75	441.49	441.65
JJ	319+65.93	-24.75	441.47	441.55
℄ N. Brg. Pier 8	319+71.68	-24.75	441.46	441.48
℄ Pier 8	319+72.84	-24.75	441.46	441.48
℄ S. Brg. Pier 8	319+74.01	-24.75	441.45	441.47
KK	319+84.01	-24.75	441.42	441.53
LL	319+94.01	-24.75	441.39	441.55
MM	320+04.01	-24.75	441.35	441.52
NN	320+14.01	-24.75	441.30	441.42
℄ N. Brg. Pier 9	320+27.30	-24.75	441.22	441.24
℄ Pier 9	320+28.43	-24.75	441.21	441.24
℄ S. Brg. Pier 9	320+29.55	-24.75	441.21	441.23
OO	320+39.55	-24.75	441.14	441.27
PP	320+49.55	-24.75	441.07	441.27
QQ	320+59.55	-24.75	440.99	441.21
RR	320+69.55	-24.75	440.90	441.09
SS	320+79.55	-24.75	440.81	440.91
℄ N. Brg. Pier 10	320+87.01	-24.75	440.73	440.75
℄ Pier 10	320+88.18	-24.75	440.72	440.74
℄ S. Brg. Pier 10	320+89.35	-24.75	440.71	440.73
TT	320+99.35	-24.75	440.60	440.73
UU	321+09.35	-24.75	440.48	440.68
VV	321+19.35	-24.75	440.36	440.58
WW	321+29.35	-24.75	440.23	440.42
XX	321+39.35	-24.75	440.10	440.20
℄ Brg. S. Abut.	321+46.13	-24.75	440.00	440.02
BK. S. Abut.	321+48.84	-24.75	439.96	439.98

BEAM 3

Location	Station	Offset	Theoretical Grade Elevations	Theoretical Grade Elevations Adjusted For Dead Load Deflection and Grinding
℄ Pier 6	318+59.06	-17.50	441.43	441.45
℄ S. Brg. Pier 6	318+60.35	-17.50	441.44	441.46
AA	318+70.35	-17.50	441.49	441.61
BB	318+80.35	-17.50	441.53	441.73
CC	318+90.35	-17.50	441.57	441.79
DD	319+00.35	-17.50	441.59	441.78
EE	319+10.35	-17.50	441.62	441.71
℄ N. Brg. Pier 7	319+16.97	-17.50	441.63	441.65
℄ Pier 7	319+18.14	-17.50	441.63	441.65
℄ S. Brg. Pier 7	319+19.31	-17.50	441.63	441.65
FF	319+29.31	-17.50	441.64	441.76
GG	319+39.31	-17.50	441.64	441.83
HH	319+49.31	-17.50	441.64	441.84
II	319+59.31	-17.50	441.63	441.79
JJ	319+69.31	-17.50	441.61	441.69
℄ N. Brg. Pier 8	319+75.06	-17.50	441.60	441.62
℄ Pier 8	319+76.22	-17.50	441.59	441.61
℄ S. Brg. Pier 8	319+77.39	-17.50	441.59	441.61
KK	319+87.39	-17.50	441.56	441.66
LL	319+97.39	-17.50	441.52	441.68
MM	320+07.39	-17.50	441.48	441.64
NN	320+17.39	-17.50	441.42	441.55
℄ N. Brg. Pier 9	320+30.68	-17.50	441.35	441.37
℄ Pier 9	320+31.81	-17.50	441.34	441.36
℄ S. Brg. Pier 9	320+32.93	-17.50	441.33	441.35
OO	320+42.93	-17.50	441.26	441.39
PP	320+52.93	-17.50	441.19	441.39
QQ	320+62.93	-17.50	441.10	441.33
RR	320+72.93	-17.50	441.01	441.20
SS	320+82.93	-17.50	440.92	441.02
℄ N. Brg. Pier 10	320+90.39	-17.50	440.84	440.86
℄ Pier 10	320+91.56	-17.50	440.83	440.85
℄ S. Brg. Pier 10	320+92.73	-17.50	440.82	440.84
TT	321+02.73	-17.50	440.71	440.83
UU	321+12.73	-17.50	440.59	440.79
VV	321+22.73	-17.50	440.46	440.69
WW	321+32.73	-17.50	440.33	440.52
XX	321+42.73	-17.50	440.20	440.29
℄ Brg. S. Abut.	321+49.51	-17.50	440.10	440.12
BK. S. Abut.	321+52.22	-17.50	440.06	440.08

NOTE:

Girder 1 thru 7 offset is to the N.B. Bridge P.G.L.
Girder 8 thru 14 offset is to the S.B. Bridge P.G.L.

BEAM 4

Location	Station	Offset	Theoretical Grade Elevations	Theoretical Grade Elevations Adjusted For Dead Load Deflection and Grinding
℄ Pier 6	318+62.44	-10.25	441.59	441.61
℄ S. Brg. Pier 6	318+63.73	-10.25	441.60	441.62
AA	318+73.73	-10.25	441.65	441.77
BB	318+83.73	-10.25	441.69	441.89
CC	318+93.73	-10.25	441.72	441.94
DD	319+03.73	-10.25	441.75	441.93
EE	319+13.73	-10.25	441.77	441.86
℄ N. Brg. Pier 7	319+20.35	-10.25	441.78	441.80
℄ Pier 7	319+21.52	-10.25	441.78	441.80
℄ S. Brg. Pier 7	319+22.69	-10.25	441.78	441.80
FF	319+32.69	-10.25	441.79	441.91
GG	319+42.69	-10.25	441.79	441.97
HH	319+52.69	-10.25	441.78	441.98
II	319+62.69	-10.25	441.77	441.93
JJ	319+72.69	-10.25	441.75	441.83
℄ N. Brg. Pier 8	319+78.44	-10.25	441.73	441.75
℄ Pier 8	319+79.60	-10.25	441.73	441.75
℄ S. Brg. Pier 8	319+80.77	-10.25	441.72	441.75
KK	319+90.77	-10.25	441.69	441.80
LL	320+00.77	-10.25	441.65	441.81
MM	320+10.77	-10.25	441.60	441.77
NN	320+20.77	-10.25	441.55	441.68
℄ N. Brg. Pier 9	320+34.06	-10.25	441.47	441.49
℄ Pier 9	320+35.19	-10.25	441.46	441.48
℄ S. Brg. Pier 9	320+36.32	-10.25	441.45	441.47
OO	320+46.32	-10.25	441.38	441.51
PP	320+56.32	-10.25	441.30	441.51
QQ	320+66.32	-10.25	441.22	441.44
RR	320+76.32	-10.25	441.13	441.31
SS	320+86.32	-10.25	441.03	441.13
℄ N. Brg. Pier 10	320+93.77	-10.25	440.95	440.97
℄ Pier 10	320+94.94	-10.25	440.94	440.96
℄ S. Brg. Pier 10	320+96.11	-10.25	440.92	440.95
TT	321+06.11	-10.25	440.81	440.94
UU	321+16.11	-10.25	440.69	440.89
VV	321+26.11	-10.25	440.57	440.79
WW	321+36.11	-10.25	440.43	440.62
XX	321+46.11	-10.25	440.29	440.39
℄ Brg. S. Abut.	321+52.89	-10.25	440.19	440.21
BK. S. Abut.	321+55.60	-10.25	440.15	440.17

BEAM 5

Location	Station	Offset	Theoretical Grade Elevations	Theoretical Grade Elevations Adjusted For Dead Load Deflection and Grinding
℄ Pier 6	318+65.82	-3.00	441.75	441.78
℄ S. Brg. Pier 6	318+67.11	-3.00	441.76	441.78
AA	318+77.11	-3.00	441.81	441.93
BB	318+87.11	-3.00	441.84	442.04
CC	318+97.11	-3.00	441.88	442.10
DD	319+07.11	-3.00	441.90	442.08
EE	319+17.11	-3.00	441.92	442.01
℄ N. Brg. Pier 7	319+23.73	-3.00	441.93	441.95
℄ Pier 7	319+24.90	-3.00	441.93	441.95
℄ S. Brg. Pier 7	319+26.07	-3.00	441.93	441.95
FF	319+36.07	-3.00	441.93	442.05
GG	319+46.07	-3.00	441.93	442.11
HH	319+56.07	-3.00	441.92	442.12
II	319+66.07	-3.00	441.91	442.07
JJ	319+76.07	-3.00	441.88	441.96
℄ N. Brg. Pier 8	319+81.82	-3.00	441.87	441.89
℄ Pier 8	319+82.98	-3.00	441.86	441.88
℄ S. Brg. Pier 8	319+84.15	-3.00	441.86	441.88
KK	319+94.15	-3.00	441.82	441.93
LL	320+04.15	-3.00	441.78	441.94
MM	320+14.15	-3.00	441.73	441.90
NN	320+24.15	-3.00	441.68	441.80
℄ N. Brg. Pier 9	320+37.44	-3.00	441.59	441.61
℄ Pier 9	320+38.57	-3.00	441.58	441.60
℄ S. Brg. Pier 9	320+39.70	-3.00	441.58	441.60
OO	320+49.70	-3.00	441.50	441.63
PP	320+59.70	-3.00	441.42	441.62
QQ	320+69.70	-3.00	441.33	441.56
RR	320+79.70	-3.00	441.24	441.43
SS	320+89.70	-3.00	441.14	441.24
℄ N. Brg. Pier 10	320+97.15	-3.00	441.06	441.08
℄ Pier 10	320+98.32	-3.00	441.05	441.07
℄ S. Brg. Pier 10	320+99.49	-3.00	441.03	441.05
TT	321+09.49	-3.00	440.92	441.04
UU	321+19.49	-3.00	440.80	441.00
VV	321+29.49	-3.00	440.67	440.89
WW	321+39.49	-3.00	440.53	440.72
XX	321+49.49	-3.00	440.39	440.49
℄ Brg. S. Abut.	321+56.27	-3.00	440.29	440.31
BK. S. Abut.	321+58.98	-3.00	440.25	440.27

PGL NB BRIDGE

Location	Station	Offset	Theoretical Grade Elevations	Theoretical Grade Elevations Adjusted For Dead Load Deflection and Grinding
℄ Pier 6	318+67.22	0.00	441.82	441.84
℄ S. Brg. Pier 6	318+68.51	0.00	441.83	441.85
AA	318+78.51	0.00	441.87	442.00
BB	318+88.51	0.00	441.91	442.11
CC	318+98.51	0.00	441.94	442.16
DD	319+08.51	0.00	441.96	442.15
EE	319+18.51	0.00	441.98	442.07
℄ N. Brg. Pier 7	319+25.13	0.00	441.99	442.01
℄ Pier 7	319+26.30	0.00	441.99	442.01
℄ S. Brg. Pier 7	319+27.47	0.00	441.99	442.01
FF	319+37.47	0.00	441.99	442.11
GG	319+47.47	0.00	441.99	442.17
HH	319+57.47	0.00	441.98	442.18
II	319+67.47	0.00	441.96	442.13
JJ	319+77.47	0.00	441.94	442.02
℄ N. Brg. Pier 8	319+83.22	0.00	441.92	441.94
℄ Pier 8	319+84.38	0.00	441.92	441.94
℄ S. Brg. Pier 8	319+85.55	0.00	441.91	441.94
KK	319+95.55	0.00	441.88	441.98
LL	320+05.55	0.00	441.83	442.00
MM	320+15.55	0.00	441.78	441.95
NN	320+25.55	0.00	441.73	441.85
℄ N. Brg. Pier 9	320+38.84	0.00	441.64	441.66
℄ Pier 9	320+39.97	0.00	441.63	441.65
℄ S. Brg. Pier 9	320+41.10	0.00	441.63	441.65
OO	320+51.10	0.00	441.55	441.68
PP	320+61.10	0.00	441.47	441.67
QQ	320+71.10	0.00	441.38	441.60
RR	320+81.10	0.00	441.29	441.47
SS	320+91.10	0.00	441.18	441.28
℄ N. Brg. Pier 10	320+98.55	0.00	441.10	441.12
℄ Pier 10	320+99.72	0.00	441.09	441.11
℄ S. Brg. Pier 10	321+00.89	0.00	441.08	441.10
TT	321+10.89	0.00	440.96	441.09
UU	321+20.89	0.00	440.84	441.04
VV	321+30.89	0.00	440.71	440.93
WW	321+40.89	0.00	440.57	440.76
XX	321+50.89	0.00	440.43	440.53
℄ Brg. S. Abut.	321+57.67	0.00	440.33	440.35
BK. S. Abut.	321+60.38	0.00	440.29	440.31

NOTE:

Girder 1 thru 7 offset is to the N.B. Bridge P.G.L.
Girder 8 thru 14 offset is to the S.B. Bridge P.G.L.

BEAM 6

Location	Station	Offset	Theoretical Grade Elevations	Theoretical Grade Elevations Adjusted For Dead Load Deflection and Grinding
℄ Pier 6	318+69.20	4.25	441.92	441.94
℄ S. Brg. Pier 6	318+70.49	4.25	441.92	441.94
AA	318+80.49	4.25	441.97	442.09
BB	318+90.49	4.25	442.00	442.20
CC	319+00.49	4.25	442.03	442.25
DD	319+10.49	4.25	442.05	442.23
EE	319+20.49	4.25	442.07	442.16
℄ N. Brg. Pier 7	319+27.11	4.25	442.07	442.09
℄ Pier 7	319+28.28	4.25	442.07	442.10
℄ S. Brg. Pier 7	319+29.45	4.25	442.08	442.10
FF	319+39.45	4.25	442.08	442.20
GG	319+49.45	4.25	442.07	442.26
HH	319+59.45	4.25	442.06	442.26
II	319+69.45	4.25	442.04	442.21
JJ	319+79.45	4.25	442.02	442.10
℄ N. Brg. Pier 8	319+85.20	4.25	442.00	442.02
℄ Pier 8	319+86.36	4.25	442.00	442.02
℄ S. Brg. Pier 8	319+87.53	4.25	441.99	442.01
KK	319+97.53	4.25	441.96	442.06
LL	320+07.53	4.25	441.91	442.07
MM	320+17.53	4.25	441.86	442.03
NN	320+27.53	4.25	441.80	441.93
℄ N. Brg. Pier 9	320+40.82	4.25	441.71	441.73
℄ Pier 9	320+41.95	4.25	441.70	441.72
℄ S. Brg. Pier 9	320+43.08	4.25	441.70	441.72
OO	320+53.08	4.25	441.62	441.75
PP	320+63.08	4.25	441.54	441.74
QQ	320+73.08	4.25	441.45	441.67
RR	320+83.08	4.25	441.35	441.54
SS	320+93.08	4.25	441.25	441.35
℄ N. Brg. Pier 10	321+00.54	4.25	441.17	441.19
℄ Pier 10	321+01.70	4.25	441.15	441.17
℄ S. Brg. Pier 10	321+02.87	4.25	441.14	441.16
TT	321+12.87	4.25	441.02	441.15
UU	321+22.87	4.25	440.90	441.10
VV	321+32.87	4.25	440.77	440.99
WW	321+42.87	4.25	440.63	440.81
XX	321+52.87	4.25	440.48	440.58
℄ Brg. S. Abut.	321+59.65	4.25	440.38	440.40
BK. S. Abut.	321+62.36	4.25	440.34	440.36

BEAM 7

Location	Station	Offset	Theoretical Grade Elevations	Theoretical Grade Elevations Adjusted For Dead Load Deflection and Grinding
℄ Pier 6	318+72.58	11.50	442.08	442.10
℄ S. Brg. Pier 6	318+73.87	11.50	442.08	442.10
AA	318+83.87	11.50	442.12	442.26
BB	318+93.87	11.50	442.16	442.37
CC	319+03.87	11.50	442.18	442.42
DD	319+13.87	11.50	442.20	442.40
EE	319+23.87	11.50	442.22	442.32
℄ N. Brg. Pier 7	319+30.49	11.50	442.22	442.24
℄ Pier 7	319+31.66	11.50	442.22	442.24
℄ S. Brg. Pier 7	319+32.83	11.50	442.22	442.24
FF	319+42.83	11.50	442.22	442.35
GG	319+52.83	11.50	442.22	442.41
HH	319+62.83	11.50	442.20	442.42
II	319+72.83	11.50	442.18	442.36
JJ	319+82.83	11.50	442.15	442.24
℄ N. Brg. Pier 8	319+88.58	11.50	442.13	442.15
℄ Pier 8	319+89.74	11.50	442.13	442.15
℄ S. Brg. Pier 8	319+90.91	11.50	442.13	442.15
KK	320+00.91	11.50	442.09	442.20
LL	320+10.91	11.50	442.04	442.21
MM	320+20.91	11.50	441.98	442.17
NN	320+30.91	11.50	441.92	442.06
℄ N. Brg. Pier 9	320+44.20	11.50	441.83	441.85
℄ Pier 9	320+45.33	11.50	441.82	441.85
℄ S. Brg. Pier 9	320+46.46	11.50	441.82	441.84
OO	320+56.46	11.50	441.74	441.88
PP	320+66.46	11.50	441.65	441.87
QQ	320+76.46	11.50	441.56	441.80
RR	320+86.46	11.50	441.46	441.66
SS	320+96.46	11.50	441.36	441.46
℄ N. Brg. Pier 10	321+03.92	11.50	441.27	441.29
℄ Pier 10	321+05.08	11.50	441.26	441.28
℄ S. Brg. Pier 10	321+06.25	11.50	441.25	441.27
TT	321+16.25	11.50	441.13	441.26
UU	321+26.25	11.50	441.00	441.21
VV	321+36.25	11.50	440.87	441.10
WW	321+46.25	11.50	440.73	440.93
XX	321+56.25	11.50	440.58	440.68
℄ Brg. S. Abut.	321+63.03	11.50	440.48	440.50
BK. S. Abut.	321+65.74	11.50	440.43	440.45

BEAM 8

Location	Station	Offset	Theoretical Grade Elevations	Theoretical Grade Elevations Adjusted For Dead Load Deflection and Grinding
℄ Pier 6	318+75.85	-11.50	442.09	442.11
℄ S. Brg. Pier 6	318+77.14	-11.50	442.10	442.12
AA	318+87.14	-11.50	442.13	442.27
BB	318+97.14	-11.50	442.17	442.38
CC	319+07.14	-11.50	442.19	442.43
DD	319+17.14	-11.50	442.21	442.40
EE	319+27.14	-11.50	442.22	442.32
℄ N. Brg. Pier 7	319+33.76	-11.50	442.22	442.24
℄ Pier 7	319+34.93	-11.50	442.22	442.24
℄ S. Brg. Pier 7	319+36.09	-11.50	442.22	442.24
FF	319+46.09	-11.50	442.22	442.35
GG	319+56.09	-11.50	442.21	442.41
HH	319+66.09	-11.50	442.20	442.41
II	319+76.09	-11.50	442.17	442.35
JJ	319+86.09	-11.50	442.14	442.23
℄ N. Brg. Pier 8	319+91.84	-11.50	442.12	442.14
℄ Pier 8	319+93.01	-11.50	442.12	442.14
℄ S. Brg. Pier 8	319+94.17	-11.50	442.11	442.13
KK	320+04.17	-11.50	442.07	442.18
LL	320+14.17	-11.50	442.02	442.20
MM	320+24.17	-11.50	441.97	442.15
NN	320+34.17	-11.50	441.90	442.04
℄ N. Brg. Pier 9	320+47.47	-11.50	441.81	441.83
℄ Pier 9	320+48.60	-11.50	441.80	441.82
℄ S. Brg. Pier 9	320+49.72	-11.50	441.79	441.81
OO	320+59.72	-11.50	441.71	441.85
PP	320+69.72	-11.50	441.62	441.84
QQ	320+79.72	-11.50	441.53	441.77
RR	320+89.72	-11.50	441.43	441.63
SS	320+99.72	-11.50	441.32	441.43
℄ N. Brg. Pier 10	321+07.18	-11.50	441.23	441.26
℄ Pier 10	321+08.35	-11.50	441.22	441.24
℄ S. Brg. Pier 10	321+09.51	-11.50	441.21	441.23
TT	321+19.51	-11.50	441.09	441.22
UU	321+29.51	-11.50	440.96	441.17
VV	321+39.51	-11.50	440.82	441.06
WW	321+49.51	-11.50	440.68	440.88
XX	321+59.51	-11.50	440.53	440.63
℄ Brg. S. Abut.	321+66.30	-11.50	440.42	440.44
BK. S. Abut.	321+69.01	-11.50	440.38	440.40

NOTE:

Girder 1 thru 7 offset is to the N.B. Bridge P.G.L.
Girder 8 thru 14 offset is to the S.B. Bridge P.G.L.

BEAM 9

Location	Station	Offset	Theoretical Grade Elevations	Theoretical Grade Elevations Adjusted For Dead Load Deflection and Grinding
℄ Pier 6	318+79.23	-4.25	441.96	441.98
℄ S. Brg. Pier 6	318+80.52	-4.25	441.97	441.99
AA	318+90.52	-4.25	442.00	442.13
BB	319+00.52	-4.25	442.03	442.23
CC	319+10.52	-4.25	442.05	442.27
DD	319+20.52	-4.25	442.07	442.25
EE	319+30.52	-4.25	442.08	442.17
℄ N. Brg. Pier 7	319+37.14	-4.25	442.08	442.10
℄ Pier 7	319+38.31	-4.25	442.08	442.10
℄ S. Brg. Pier 7	319+39.47	-4.25	442.08	442.10
FF	319+49.47	-4.25	442.07	442.19
GG	319+59.47	-4.25	442.06	442.25
HH	319+69.47	-4.25	442.04	442.24
II	319+79.47	-4.25	442.02	442.18
JJ	319+89.47	-4.25	441.99	442.07
℄ N. Brg. Pier 8	319+95.22	-4.25	441.96	441.99
℄ Pier 8	319+96.39	-4.25	441.96	441.98
℄ S. Brg. Pier 8	319+97.55	-4.25	441.95	441.98
KK	320+07.55	-4.25	441.91	442.02
LL	320+17.55	-4.25	441.86	442.02
MM	320+27.55	-4.25	441.80	441.97
NN	320+37.55	-4.25	441.74	441.86
℄ N. Brg. Pier 9	320+50.85	-4.25	441.64	441.66
℄ Pier 9	320+51.98	-4.25	441.63	441.65
℄ S. Brg. Pier 9	320+53.10	-4.25	441.62	441.64
OO	320+63.10	-4.25	441.54	441.66
PP	320+73.10	-4.25	441.45	441.65
QQ	320+83.10	-4.25	441.35	441.57
RR	320+93.10	-4.25	441.25	441.43
SS	321+03.10	-4.25	441.14	441.24
℄ N. Brg. Pier 10	321+10.56	-4.25	441.05	441.07
℄ Pier 10	321+11.73	-4.25	441.04	441.06
℄ S. Brg. Pier 10	321+12.89	-4.25	441.02	441.04
TT	321+22.89	-4.25	440.90	441.02
UU	321+32.89	-4.25	440.77	440.97
VV	321+42.89	-4.25	440.63	440.85
WW	321+52.89	-4.25	440.48	440.67
XX	321+62.89	-4.25	440.33	440.43
℄ Brg. S. Abut.	321+69.68	-4.25	440.23	440.25
BK. S. Abut.	321+72.39	-4.25	440.18	440.20

PGL SB BRIDGE

Location	Station	Offset	Theoretical Grade Elevations	Theoretical Grade Elevations Adjusted For Dead Load Deflection and Grinding
℄ Pier 6	318+81.21	0.00	441.90	441.90
℄ S. Brg. Pier 6	318+82.50	0.00	441.91	441.91
AA	318+92.50	0.00	442.05	442.05
BB	319+02.50	0.00	442.15	442.15
CC	319+12.50	0.00	442.19	442.19
DD	319+22.50	0.00	442.17	442.17
EE	319+32.50	0.00	442.09	442.09
℄ N. Brg. Pier 7	319+39.12	0.00	442.01	442.01
℄ Pier 7	319+40.29	0.00	442.01	442.01
℄ S. Brg. Pier 7	319+41.46	0.00	442.01	442.01
FF	319+51.46	0.00	442.11	442.11
GG	319+61.46	0.00	442.16	442.16
HH	319+71.46	0.00	442.15	442.15
II	319+81.46	0.00	442.09	442.09
JJ	319+91.46	0.00	441.97	441.97
℄ N. Brg. Pier 8	319+97.21	0.00	441.89	441.89
℄ Pier 8	319+98.37	0.00	441.89	441.89
℄ S. Brg. Pier 8	319+99.54	0.00	441.88	441.88
KK	320+09.54	0.00	441.92	441.92
LL	320+19.54	0.00	441.92	441.92
MM	320+29.54	0.00	441.87	441.87
NN	320+39.54	0.00	441.76	441.76
℄ N. Brg. Pier 9	320+52.83	0.00	441.56	441.56
℄ Pier 9	320+53.96	0.00	441.55	441.55
℄ S. Brg. Pier 9	320+55.09	0.00	441.54	441.54
OO	320+65.09	0.00	441.56	441.56
PP	320+75.09	0.00	441.54	441.54
QQ	320+85.09	0.00	441.47	441.47
RR	320+95.09	0.00	441.33	441.33
SS	321+05.09	0.00	441.13	441.13
℄ N. Brg. Pier 10	321+12.54	0.00	440.96	440.96
℄ Pier 10	321+13.71	0.00	440.95	440.95
℄ S. Brg. Pier 10	321+14.88	0.00	440.93	440.93
TT	321+24.88	0.00	440.91	440.91
UU	321+34.88	0.00	440.85	440.85
VV	321+44.88	0.00	440.74	440.74
WW	321+54.88	0.00	440.55	440.55
XX	321+64.88	0.00	440.31	440.31
℄ Brg. S. Abut.	321+71.66	0.00	440.13	440.13
BK. S. Abut.	321+74.37	0.00	440.09	440.09

BEAM 10

Location	Station	Offset	Theoretical Grade Elevations	Theoretical Grade Elevations Adjusted For Dead Load Deflection and Grinding
℄ Pier 6	318+82.61	3.00	441.83	441.85
℄ S. Brg. Pier 6	318+83.90	3.00	441.83	441.85
AA	318+93.90	3.00	441.87	441.99
BB	319+03.90	3.00	441.89	442.09
CC	319+13.90	3.00	441.91	442.13
DD	319+23.90	3.00	441.93	442.11
EE	319+33.90	3.00	441.93	442.03
℄ N. Brg. Pier 7	319+40.52	3.00	441.93	441.95
℄ Pier 7	319+41.69	3.00	441.93	441.95
℄ S. Brg. Pier 7	319+42.86	3.00	441.93	441.95
FF	319+52.86	3.00	441.93	442.04
GG	319+62.86	3.00	441.91	442.10
HH	319+72.86	3.00	441.89	442.09
II	319+82.86	3.00	441.86	442.03
JJ	319+92.86	3.00	441.83	441.91
℄ N. Brg. Pier 8	319+98.61	3.00	441.81	441.83
℄ Pier 8	319+99.77	3.00	441.80	441.82
℄ S. Brg. Pier 8	320+00.94	3.00	441.80	441.82
KK	320+10.94	3.00	441.75	441.85
LL	320+20.94	3.00	441.69	441.86
MM	320+30.94	3.00	441.63	441.80
NN	320+40.94	3.00	441.57	441.69
℄ N. Brg. Pier 9	320+54.23	3.00	441.47	441.49
℄ Pier 9	320+55.36	3.00	441.46	441.48
℄ S. Brg. Pier 9	320+56.48	3.00	441.45	441.47
OO	320+66.48	3.00	441.36	441.49
PP	320+76.48	3.00	441.27	441.47
QQ	320+86.48	3.00	441.17	441.39
RR	320+96.48	3.00	441.07	441.25
SS	321+06.48	3.00	440.95	441.05
℄ N. Brg. Pier 10	321+13.94	3.00	440.86	440.88
℄ Pier 10	321+15.11	3.00	440.85	440.87
℄ S. Brg. Pier 10	321+16.28	3.00	440.84	440.86
TT	321+26.28	3.00	440.71	440.84
UU	321+36.28	3.00	440.58	440.78
VV	321+46.28	3.00	440.44	440.66
WW	321+56.28	3.00	440.29	440.47
XX	321+66.28	3.00	440.13	440.23
℄ Brg. S. Abut.	321+73.06	3.00	440.03	440.05
BK. S. Abut.	321+75.77	3.00	439.98	440.00

NOTE:

Girder 1 thru 7 offset is to the N.B. Bridge P.G.L.
Girder 8 thru 14 offset is to the S.B. Bridge P.G.L.

BEAM 11

Location	Station	Offset	Theoretical Grade Elevations	Theoretical Grade Elevations Adjusted For Dead Load Deflection and Grinding
℄ Pier 6	318+85.99	10.25	441.70	441.72
℄ S. Brg. Pier 6	318+87.28	10.25	441.70	441.72
AA	318+97.28	10.25	441.73	441.86
BB	319+07.28	10.25	441.76	441.96
CC	319+17.28	10.25	441.77	441.99
DD	319+27.28	10.25	441.78	441.97
EE	319+37.28	10.25	441.79	441.88
℄ N. Brg. Pier 7	319+43.90	10.25	441.79	441.81
℄ Pier 7	319+45.07	10.25	441.79	441.81
℄ S. Brg. Pier 7	319+46.24	10.25	441.79	441.81
FF	319+56.24	10.25	441.78	441.89
GG	319+66.24	10.25	441.76	441.94
HH	319+76.24	10.25	441.74	441.94
II	319+86.24	10.25	441.71	441.87
JJ	319+96.24	10.25	441.67	441.75
℄ N. Brg. Pier 8	320+01.99	10.25	441.65	441.67
℄ Pier 8	320+03.15	10.25	441.64	441.66
℄ S. Brg. Pier 8	320+04.32	10.25	441.64	441.66
KK	320+14.32	10.25	441.59	441.69
LL	320+24.32	10.25	441.53	441.69
MM	320+34.32	10.25	441.47	441.64
NN	320+44.32	10.25	441.40	441.52
℄ N. Brg. Pier 9	320+57.61	10.25	441.29	441.31
℄ Pier 9	320+58.74	10.25	441.28	441.30
℄ S. Brg. Pier 9	320+59.86	10.25	441.27	441.30
OO	320+69.86	10.25	441.19	441.31
PP	320+79.86	10.25	441.09	441.29
QQ	320+89.86	10.25	440.99	441.21
RR	320+99.86	10.25	440.88	441.07
SS	321+09.86	10.25	440.77	440.87
℄ N. Brg. Pier 10	321+17.32	10.25	440.68	440.70
℄ Pier 10	321+18.49	10.25	440.66	440.68
℄ S. Brg. Pier 10	321+19.66	10.25	440.65	440.67
TT	321+29.66	10.25	440.52	440.65
UU	321+39.66	10.25	440.38	440.58
VV	321+49.66	10.25	440.24	440.46
WW	321+59.66	10.25	440.09	440.28
XX	321+69.66	10.25	439.94	440.03
℄ Brg. S. Abut.	321+76.44	10.25	439.83	439.85
BK. S. Abut.	321+79.15	10.25	439.78	439.80

BEAM 12

Location	Station	Offset	Theoretical Grade Elevations	Theoretical Grade Elevations Adjusted For Dead Load Deflection and Grinding
℄ Pier 6	318+89.37	17.50	441.56	441.58
℄ S. Brg. Pier 6	318+90.66	17.50	441.57	441.59
AA	319+00.66	17.50	441.60	441.72
BB	319+10.66	17.50	441.62	441.82
CC	319+20.66	17.50	441.63	441.85
DD	319+30.66	17.50	441.64	441.82
EE	319+40.66	17.50	441.64	441.74
℄ N. Brg. Pier 7	319+47.28	17.50	441.64	441.66
℄ Pier 7	319+48.45	17.50	441.64	441.66
℄ S. Brg. Pier 7	319+49.62	17.50	441.64	441.66
FF	319+59.62	17.50	441.63	441.75
GG	319+69.62	17.50	441.61	441.79
HH	319+79.62	17.50	441.58	441.78
II	319+89.62	17.50	441.55	441.71
JJ	319+99.62	17.50	441.51	441.59
℄ N. Brg. Pier 8	320+05.37	17.50	441.49	441.51
℄ Pier 8	320+06.53	17.50	441.48	441.50
℄ S. Brg. Pier 8	320+07.70	17.50	441.47	441.50
KK	320+17.70	17.50	441.42	441.53
LL	320+27.70	17.50	441.36	441.53
MM	320+37.70	17.50	441.30	441.47
NN	320+47.70	17.50	441.23	441.35
℄ N. Brg. Pier 9	320+60.99	17.50	441.12	441.14
℄ Pier 9	320+62.12	17.50	441.11	441.13
℄ S. Brg. Pier 9	320+63.25	17.50	441.10	441.12
OO	320+73.25	17.50	441.01	441.14
PP	320+83.25	17.50	440.91	441.12
QQ	320+93.25	17.50	440.81	441.03
RR	321+03.25	17.50	440.70	440.89
SS	321+13.25	17.50	440.58	440.68
℄ N. Brg. Pier 10	321+20.70	17.50	440.49	440.51
℄ Pier 10	321+21.87	17.50	440.48	440.50
℄ S. Brg. Pier 10	321+23.04	17.50	440.46	440.48
TT	321+33.04	17.50	440.33	440.46
UU	321+43.04	17.50	440.19	440.39
VV	321+53.04	17.50	440.05	440.27
WW	321+63.04	17.50	439.89	440.08
XX	321+73.04	17.50	439.74	439.83
℄ Brg. S. Abut.	321+79.82	17.50	439.62	439.65
BK. S. Abut.	321+82.53	17.50	439.58	439.60

BEAM 13

Location	Station	Offset	Theoretical Grade Elevations	Theoretical Grade Elevations Adjusted For Dead Load Deflection and Grinding
℄ Pier 6	318+92.75	24.75	441.43	441.45
℄ S. Brg. Pier 6	318+94.04	24.75	441.43	441.45
AA	319+04.04	24.75	441.46	441.59
BB	319+14.04	24.75	441.48	441.68
CC	319+24.04	24.75	441.49	441.71
DD	319+34.04	24.75	441.50	441.68
EE	319+44.04	24.75	441.50	441.59
℄ N. Brg. Pier 7	319+50.66	24.75	441.49	441.51
℄ Pier 7	319+51.83	24.75	441.49	441.51
℄ S. Brg. Pier 7	319+53.00	24.75	441.49	441.51
FF	319+63.00	24.75	441.48	441.59
GG	319+73.00	24.75	441.46	441.64
HH	319+83.00	24.75	441.43	441.63
II	319+93.00	24.75	441.39	441.56
JJ	320+03.00	24.75	441.35	441.43
℄ N. Brg. Pier 8	320+08.75	24.75	441.32	441.35
℄ Pier 8	320+09.91	24.75	441.32	441.34
℄ S. Brg. Pier 8	320+11.08	24.75	441.31	441.33
KK	320+21.08	24.75	441.26	441.37
LL	320+31.08	24.75	441.20	441.36
MM	320+41.08	24.75	441.13	441.30
NN	320+51.08	24.75	441.06	441.18
℄ N. Brg. Pier 9	320+64.37	24.75	440.95	440.97
℄ Pier 9	320+65.50	24.75	440.94	440.96
℄ S. Brg. Pier 9	320+66.63	24.75	440.93	440.95
OO	320+76.63	24.75	440.83	440.96
PP	320+86.63	24.75	440.73	440.94
QQ	320+96.63	24.75	440.63	440.85
RR	321+06.63	24.75	440.52	440.70
SS	321+16.63	24.75	440.40	440.50
℄ N. Brg. Pier 10	321+24.08	24.75	440.30	440.32
℄ Pier 10	321+25.25	24.75	440.29	440.31
℄ S. Brg. Pier 10	321+26.42	24.75	440.27	440.29
TT	321+36.42	24.75	440.14	440.27
UU	321+46.42	24.75	440.00	440.20
VV	321+56.42	24.75	439.85	440.07
WW	321+66.42	24.75	439.70	439.88
XX	321+76.42	24.75	439.54	439.63
℄ Brg. S. Abut.	321+83.20	24.75	439.42	439.44
BK. S. Abut.	321+85.91	24.75	439.38	439.40

NOTE:

Girder 1 thru 7 offset is to the N.B. Bridge P.G.L.
Girder 8 thru 14 offset is to the S.B. Bridge P.G.L.

BEAM 14

Location	Station	Offset	Theoretical Grade Elevations	Theoretical Grade Elevations Adjusted For Dead Load Deflection and Grinding
℄ Pier 6	318+96.13	32.00	441.29	441.31
℄ S. Brg. Pier 6	318+97.42	32.00	441.30	441.32
AA	319+07.42	32.00	441.32	441.46
BB	319+17.42	32.00	441.34	441.55
CC	319+27.42	32.00	441.35	441.59
DD	319+37.42	32.00	441.35	441.55
EE	319+47.42	32.00	441.35	441.45
℄ N. Brg. Pier 7	319+54.04	32.00	441.34	441.36
℄ Pier 7	319+55.21	32.00	441.34	441.36
℄ S. Brg. Pier 7	319+56.38	32.00	441.34	441.36
FF	319+66.38	32.00	441.32	441.45
GG	319+76.38	32.00	441.30	441.50
HH	319+86.38	32.00	441.27	441.49
II	319+96.38	32.00	441.23	441.41
JJ	320+06.38	32.00	441.19	441.28
℄ N. Brg. Pier 8	320+12.13	32.00	441.16	441.18
℄ Pier 8	320+13.29	32.00	441.16	441.18
℄ S. Brg. Pier 8	320+14.46	32.00	441.15	441.17
KK	320+24.46	32.00	441.09	441.21
LL	320+34.46	32.00	441.03	441.20
MM	320+44.46	32.00	440.96	441.14
NN	320+54.46	32.00	440.88	441.02
℄ N. Brg. Pier 9	320+67.75	32.00	440.77	440.79
℄ Pier 9	320+68.88	32.00	440.76	440.78
℄ S. Brg. Pier 9	320+70.01	32.00	440.75	440.77
OO	320+80.01	32.00	440.66	440.79
PP	320+90.01	32.00	440.55	440.77
QQ	321+00.01	32.00	440.45	440.69
RR	321+10.01	32.00	440.33	440.53
SS	321+20.01	32.00	440.21	440.32
℄ N. Brg. Pier 10	321+27.47	32.00	440.11	440.13
℄ Pier 10	321+28.63	32.00	440.10	440.12
℄ S. Brg. Pier 10	321+29.80	32.00	440.08	440.10
TT	321+39.80	32.00	439.95	440.08
UU	321+49.80	32.00	439.80	440.02
VV	321+59.80	32.00	439.65	439.89
WW	321+69.80	32.00	439.50	439.70
XX	321+79.80	32.00	439.34	439.44
℄ Brg. S. Abut.	321+86.58	32.00	439.22	439.24
BK. S. Abut.	321+89.29	32.00	439.17	439.19

NOTE:

Girder 1 thru 7 offset is to the N.B. Bridge P.G.L.
Girder 8 thru 14 offset is to the S.B. Bridge P.G.L.

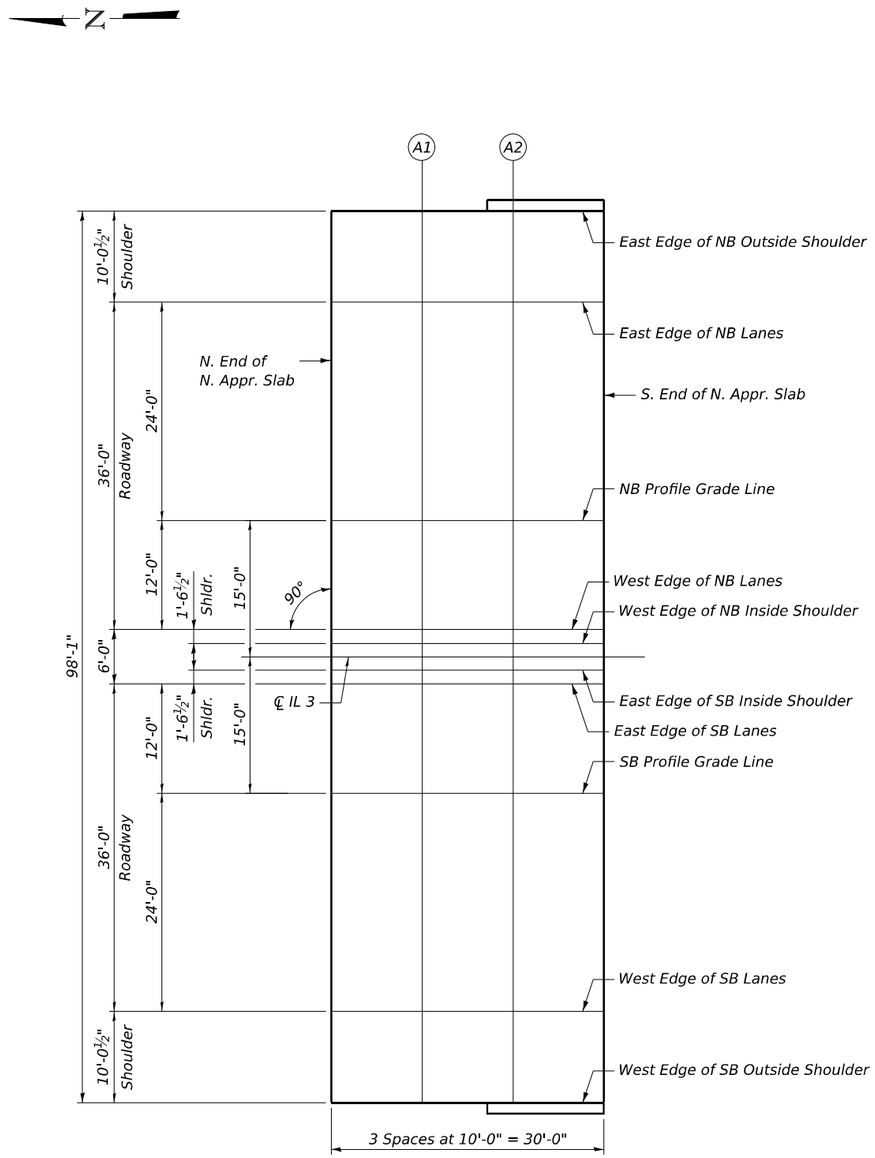

PLAN

EAST EDGE OF NB OUTSIDE SHOULDER

Location	Station	Offset	Theoretical Grade Elevations	Theoretical Grade Elevations Adjusted For Grinding
N. End of N. Appr. Slab	315+46.16	-34.04	436.03	436.05
A1	315+56.16	-34.04	436.29	436.31
A2	315+66.16	-34.04	436.55	436.57
S. End of N. Appr. Slab	315+76.16	-34.04	436.81	436.83

EAST EDGE OF NB LANES

Location	Station	Offset	Theoretical Grade Elevations	Theoretical Grade Elevations Adjusted For Grinding
N. End of N. Appr. Slab	315+46.16	-24.00	436.23	436.25
A1	315+56.16	-24.00	436.49	436.51
A2	315+66.16	-24.00	436.75	436.77
S. End of N. Appr. Slab	315+76.16	-24.00	437.01	437.03

NB PROFILE GRADE LINE

Location	Station	Offset	Theoretical Grade Elevations	Theoretical Grade Elevations Adjusted For Grinding
N. End of N. Appr. Slab	315+46.16	0.00	436.71	436.73
A1	315+56.16	0.00	436.97	436.99
A2	315+66.16	0.00	437.23	437.25
S. End of N. Appr. Slab	315+76.16	0.00	437.49	437.51

WEST EDGE OF NB LANES

Location	Station	Offset	Theoretical Grade Elevations	Theoretical Grade Elevations Adjusted For Grinding
N. End of N. Appr. Slab	315+46.16	12.00	436.95	436.97
A1	315+56.16	12.00	437.21	437.23
A2	315+66.16	12.00	437.47	437.49
S. End of N. Appr. Slab	315+76.16	12.00	437.73	437.75

WEST EDGE OF NB INSIDE SHOULDER

Location	Station	Offset	Theoretical Grade Elevations	Theoretical Grade Elevations Adjusted For Grinding
N. End of N. Appr. Slab	315+46.16	13.54	436.98	437.00
A1	315+56.16	13.54	437.25	437.27
A2	315+66.16	13.54	437.51	437.53
S. End of N. Appr. Slab	315+76.16	13.54	437.76	437.78

EAST EDGE OF SB INSIDE SHOULDER

Location	Station	Offset	Theoretical Grade Elevations	Theoretical Grade Elevations Adjusted For Grinding
N. End of N. Appr. Slab	315+46.16	-13.54	436.98	437.00
A1	315+56.16	-13.54	437.25	437.27
A2	315+66.16	-13.54	437.51	437.53
S. End of N. Appr. Slab	315+76.16	-13.54	437.76	437.78

EAST EDGE OF SB LANES

Location	Station	Offset	Theoretical Grade Elevations	Theoretical Grade Elevations Adjusted For Grinding
N. End of N. Appr. Slab	315+46.16	-12.00	436.95	436.97
A1	315+56.16	-12.00	437.21	437.23
A2	315+66.16	-12.00	437.47	437.49
S. End of N. Appr. Slab	315+76.16	-12.00	437.73	437.75

SB PROFILE GRADE LINE

Location	Station	Offset	Theoretical Grade Elevations	Theoretical Grade Elevations Adjusted For Grinding
N. End of N. Appr. Slab	315+46.16	0.00	436.71	436.73
A1	315+56.16	0.00	436.97	436.99
A2	315+66.16	0.00	437.23	437.25
S. End of N. Appr. Slab	315+76.16	0.00	437.49	437.51

WEST EDGE OF SB LANES

Location	Station	Offset	Theoretical Grade Elevations	Theoretical Grade Elevations Adjusted For Grinding
N. End of N. Appr. Slab	315+46.16	24.00	436.23	436.25
A1	315+56.16	24.00	436.49	436.51
A2	315+66.16	24.00	436.75	436.77
S. End of N. Appr. Slab	315+76.16	24.00	437.01	437.03

WEST EDGE OF SB OUTSIDE SHOULDER

Location	Station	Offset	Theoretical Grade Elevations	Theoretical Grade Elevations Adjusted For Grinding
N. End of N. Appr. Slab	315+46.16	34.04	436.03	436.05
A1	315+56.16	34.04	436.29	436.31
A2	315+66.16	34.04	436.55	436.57
S. End of N. Appr. Slab	315+76.16	34.04	436.81	436.83

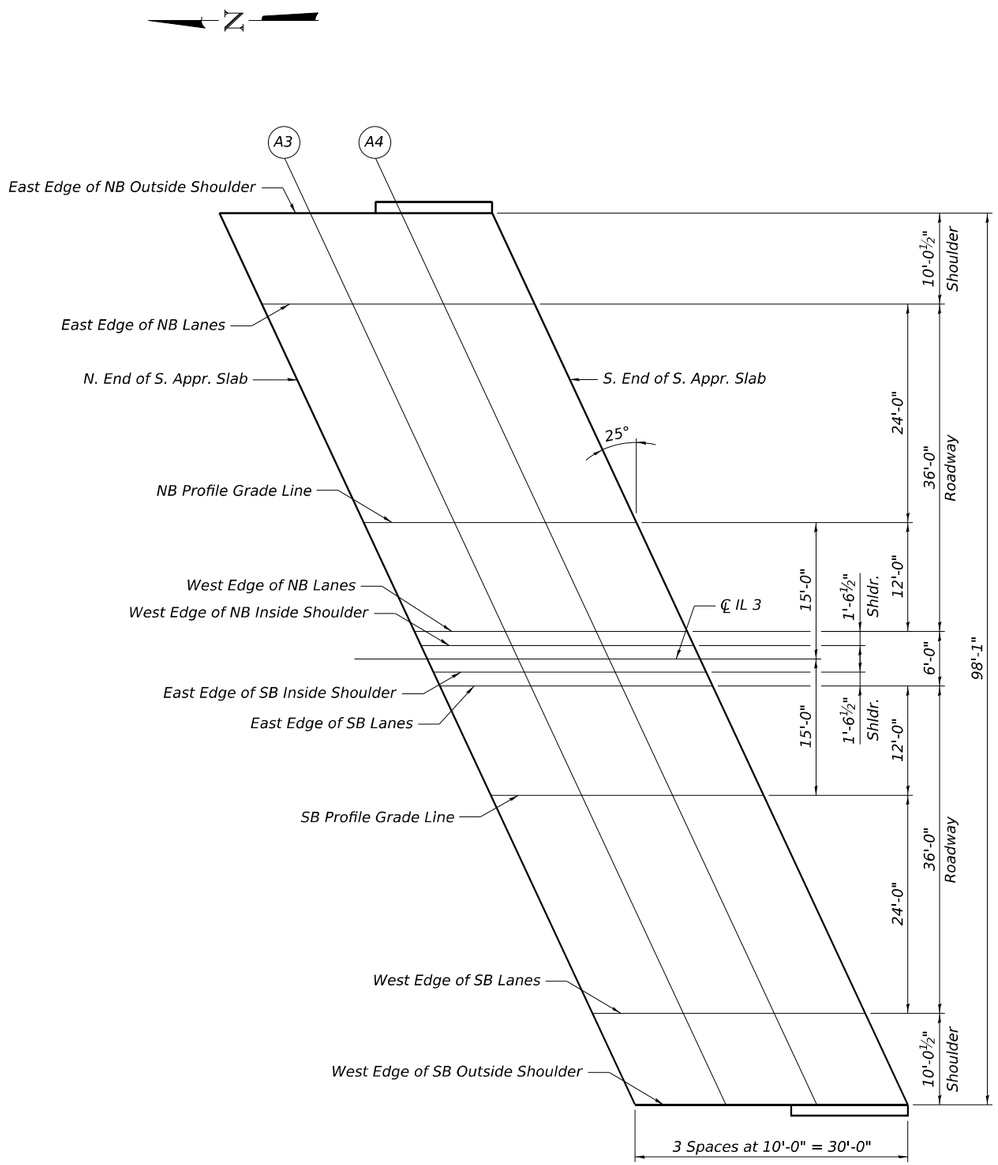

PLAN

EAST EDGE OF NB OUTSIDE SHOULDER

Location	Station	Offset	Theoretical Grade Elevations	Theoretical Grade Elevations Adjusted For Grinding
N. End of S. Appr. Slab	321+43.41	-34.04	439.85	439.87
A3	321+53.41	-34.04	439.71	439.73
A4	321+63.41	-34.04	439.56	439.58
S. End of S. Appr. Slab	321+73.41	-34.04	439.40	439.42

EAST EDGE OF NB LANES

Location	Station	Offset	Theoretical Grade Elevations	Theoretical Grade Elevations Adjusted For Grinding
N. End of S. Appr. Slab	321+48.07	-24.00	439.99	440.01
A3	321+58.07	-24.00	439.84	439.86
A4	321+68.07	-24.00	439.68	439.70
S. End of S. Appr. Slab	321+78.07	-24.00	439.52	439.54

NB PROFILE GRADE LINE

Location	Station	Offset	Theoretical Grade Elevations	Theoretical Grade Elevations Adjusted For Grinding
N. End of S. Appr. Slab	321+59.26	0.00	440.30	440.32
A3	321+69.26	0.00	440.14	440.16
A4	321+79.26	0.00	439.98	440.00
S. End of S. Appr. Slab	321+89.26	0.00	439.81	439.83

WEST EDGE OF NB LANES

Location	Station	Offset	Theoretical Grade Elevations	Theoretical Grade Elevations Adjusted For Grinding
N. End of S. Appr. Slab	321+64.86	12.00	440.25	440.27
A3	321+74.86	12.00	440.29	440.31
A4	321+84.86	12.00	440.13	440.15
S. End of S. Appr. Slab	321+94.86	12.00	439.95	439.97

WEST EDGE OF NB INSIDE SHOULDER

Location	Station	Offset	Theoretical Grade Elevations	Theoretical Grade Elevations Adjusted For Grinding
N. End of S. Appr. Slab	321+65.60	13.54	440.47	440.49
A3	321+75.60	13.54	440.31	440.33
A4	321+85.60	13.54	440.15	440.17
S. End of S. Appr. Slab	321+95.60	13.54	439.97	439.99

EAST EDGE OF SB INSIDE SHOULDER

Location	Station	Offset	Theoretical Grade Elevations	Theoretical Grade Elevations Adjusted For Grinding
N. End of S. Appr. Slab	321+66.96	-13.54	440.45	440.47
A3	321+76.96	-13.54	440.29	440.31
A4	321+86.96	-13.54	440.12	440.14
S. End of S. Appr. Slab	321+96.96	-13.54	439.95	439.97

EAST EDGE OF SB LANES

Location	Station	Offset	Theoretical Grade Elevations	Theoretical Grade Elevations Adjusted For Grinding
N. End of S. Appr. Slab	321+67.69	-12.00	440.41	440.43
A3	321+77.69	-12.00	440.25	440.27
A4	321+87.69	-12.00	440.08	440.10
S. End of S. Appr. Slab	321+97.69	-12.00	439.90	439.92

SB PROFILE GRADE LINE

Location	Station	Offset	Theoretical Grade Elevations	Theoretical Grade Elevations Adjusted For Grinding
N. End of S. Appr. Slab	321+73.29	0.00	440.08	440.10
A3	321+83.29	0.00	439.91	439.93
A4	321+93.29	0.00	439.74	439.76
S. End of S. Appr. Slab	322+03.29	0.00	439.56	439.58

WEST EDGE OF SB LANES

Location	Station	Offset	Theoretical Grade Elevations	Theoretical Grade Elevations Adjusted For Grinding
N. End of S. Appr. Slab	321+84.48	24.00	439.41	439.43
A3	321+94.48	24.00	439.24	439.26
A4	322+04.48	24.00	439.06	439.08
S. End of S. Appr. Slab	322+14.48	24.00	438.87	438.89

WEST EDGE OF SB OUTSIDE SHOULDER

Location	Station	Offset	Theoretical Grade Elevations	Theoretical Grade Elevations Adjusted For Grinding
N. End of S. Appr. Slab	321+89.15	34.04	439.13	439.15
A3	321+99.15	34.04	438.96	438.98
A4	322+09.15	34.04	438.77	438.79
S. End of S. Appr. Slab	322+19.15	34.04	438.58	438.60

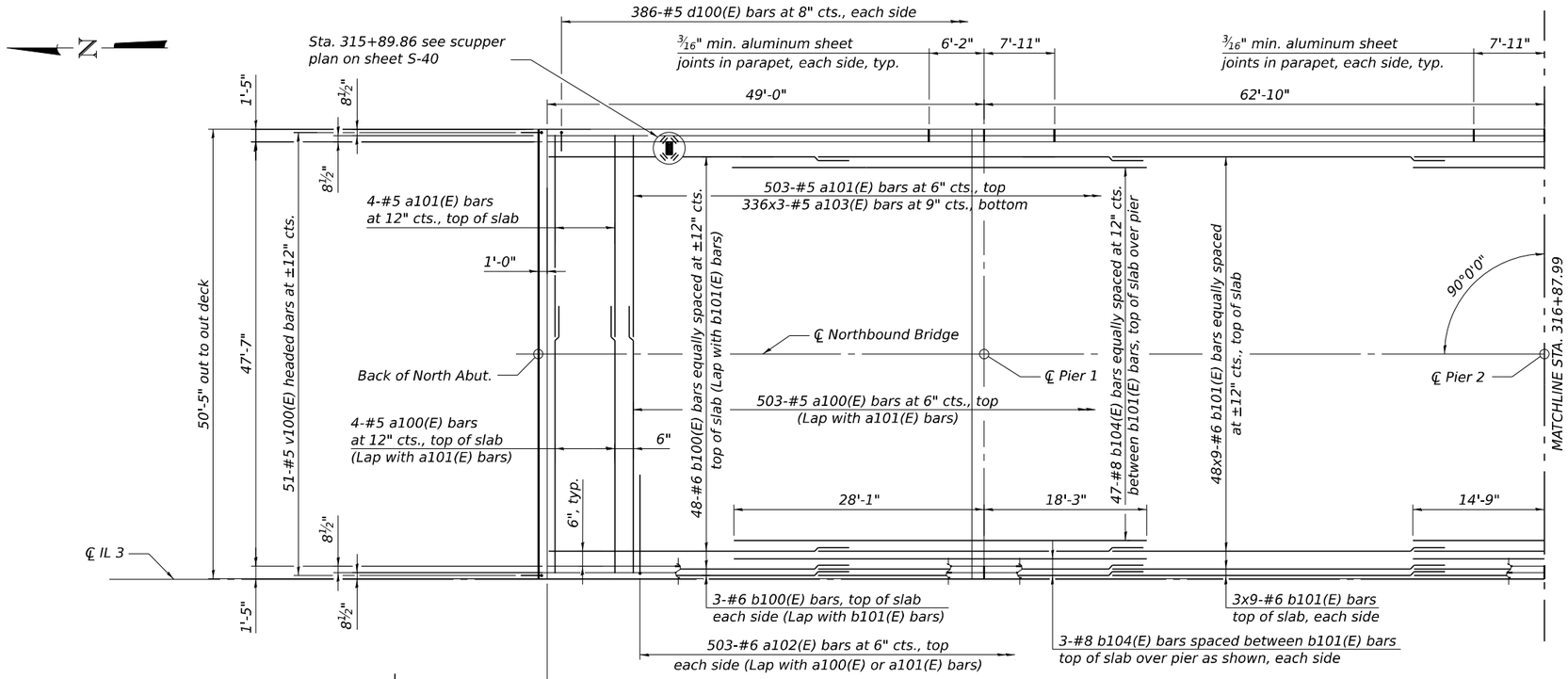

PARTIAL PLAN - SPANS 1 & 2

Northbound bridge shown
Southbound bridge similar

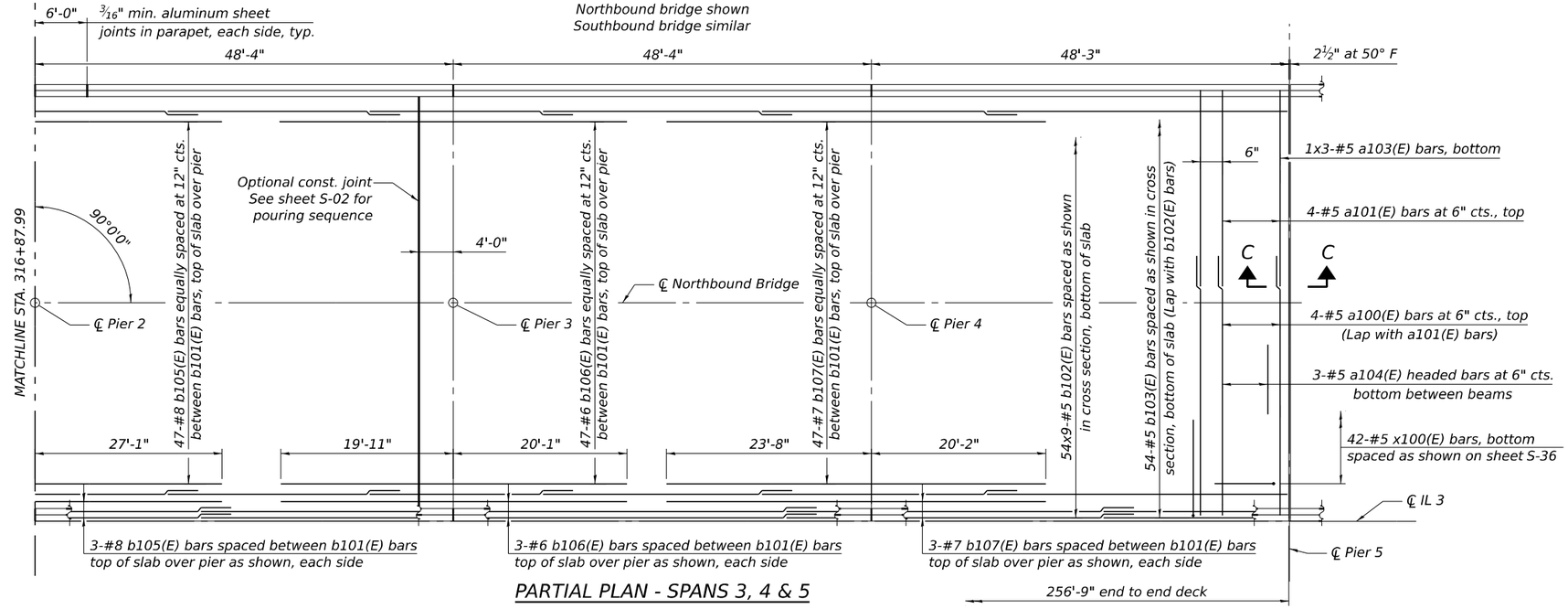

PARTIAL PLAN - SPANS 3, 4 & 5

Northbound bridge shown
Southbound bridge similar

MINIMUM BAR LAP

#5 bar = 3'-6"
#6 bar = 3'-7"

Notes:
See sheet S-40 of S-80 for superstructure details and Bill of Material.
Bars indicated thus 20 x 3-#5 etc. indicates 20 lines of bars with 3 lengths per line.

For Section C-C, see sheet S-36 of S-80.

Dimensions are based on a Rolled Rail Strip Seal Joint. If the Contractor elects to use the Welded Rail Strip Seal Joint, deck dimensions may require adjustments to satisfy the detail on sheet S-49 of S-80.

* Dimension showing concrete opening.
For joint opening see sheet S-49 of S-80.

MODEL: Sheet View
FILE NAME: pw://hq-pwint01.a-e.transyscorp.com:transyscorp-pw1/Documents/Projects_2020/CH401/401200165/Bridge/304.02 - Sheet Files/06000202-D876N65-028-SUPERSTRUCTURE PLAN 1.dgn

TRANSYSTEMS

USER NAME = mbmcwhorter	DESIGNED - RMJ	REVISED -	
	CHECKED - IIP	REVISED -	
PLOT SCALE =	DRAWN - RMJ	REVISED -	
PLOT DATE = 11/13/2025	CHECKED - IIP	REVISED -	

STATE OF ILLINOIS
DEPARTMENT OF TRANSPORTATION

SUPERSTRUCTURE PLAN 1
STRUCTURE NO. 060-0202

SHEET S-26 OF S-80 SHEETS

F.A.P. RTE.	SECTION	COUNTY	TOTAL SHEETS	SHEET NO.
0002	(103,104)BR-1	MADISON	178	105
		CONTRACT NO. 76N65		
		ILLINOIS	FED. AID PROJECT	

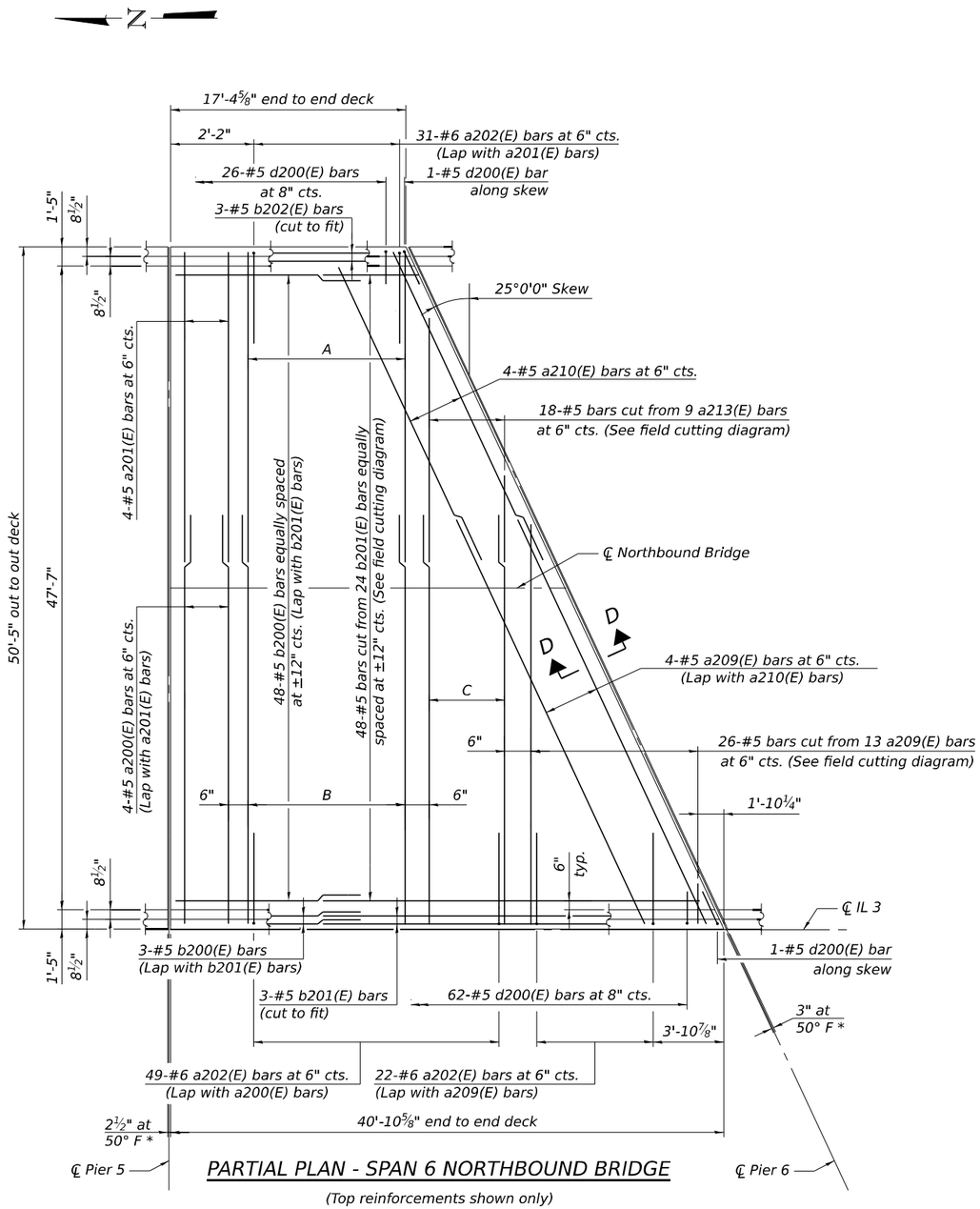

PARTIAL PLAN - SPAN 6 NORTHBOUND BRIDGE

(Top reinforcements shown only)

A) 31-#5 a201(E) bars at 6" cts.

B) 31-#5 a200(E) bars at 6" cts.
(Lap with a201(E) bars)

C) 18-#5 a200(E) bars at 6" cts.
(Lap with a213(E) bars)

MINIMUM BAR LAP

#5 bar = 3'-6"
#6 bar = 3'-7"

Notes:
See sheet S-41 of S-80 for superstructure details, field cutting diagrams, and Bill of Material.
Bars indicated thus 20x3-#5 etc. indicates 20 lines of bars with 3 lengths per line.

For Section C-C, see sheet S-36 of S-80.
For Section D-D, see sheet S-37 of S-80.

Dimensions are based on a Rolled Rail Strip Seal Joint. If the Contractor elects to use the Welded Rail Strip Seal Joint, deck dimensions may require adjustments to satisfy the details on sheet S-49 of S-80.

* Dimension showing concrete opening.
For joint opening see sheet S-49 of S-80.

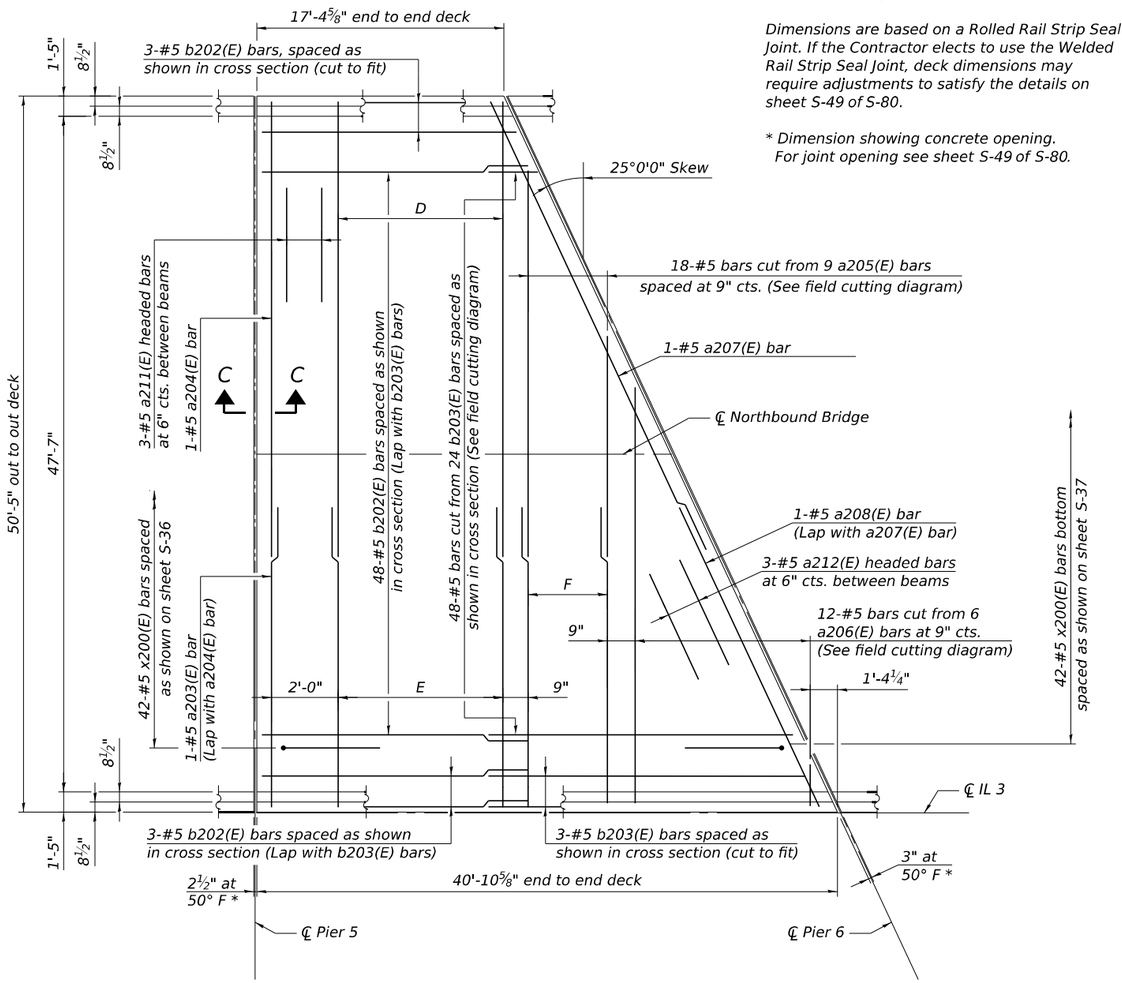

PARTIAL PLAN - SPAN 6 NORTHBOUND BRIDGE

(Bottom reinforcements shown only)

D) 21-#5 a204(E) bars at 9" cts.

E) 21-#5 a203(E) bars at 9" cts.
(Lap with a204(E) bars)

F) 18-#5 a203(E) bars at 9" cts.
(Lap with a205(E) bars)

MODEL: Sheet View
FILE NAME: pw://hq-pwint01.a-e.transyscorp.com:transyscorp-pw1/Documents/Projects_2020/CH401/40120165/Bridge/304.02 - Sheet Files/0600202-D876N65-029-SUPERSTRUCTURE PLAN 2.dgn

TRANSYSTEMS

USER NAME = mbmcwhorter	DESIGNED - RMJ	REVISED -	
	CHECKED - IIP	REVISED -	
PLOT SCALE =	DRAWN - RMJ	REVISED -	
PLOT DATE = 11/13/2025	CHECKED - IIP	REVISED -	

STATE OF ILLINOIS
DEPARTMENT OF TRANSPORTATION

SUPERSTRUCTURE PLAN 2
STRUCTURE NO. 060-0202

SHEET S-27 OF S-80 SHEETS

F.A.P. RTE.	SECTION	COUNTY	TOTAL SHEETS	SHEET NO.
0002	(103,104)BR-1	MADISON	178	106

CONTRACT NO. 76N65

ILLINOIS | FED. AID PROJECT

MINIMUM BAR LAP

#5 bar = 3'-6"
#6 bar = 3'-7"

Notes:
See sheet S-42 of S-80 for superstructure details, field cutting diagrams, and Bill of Material.
Bars indicated thus 20x3-#5 etc. indicates 20 lines of bars with 3 lengths per line.

For Sections C-C, see sheet S-36 of S-80.
For Sections D-D, see sheet S-37 of S-80.

* Dimension showing concrete opening.
For joint opening, see sheet S-49 of S-80.

Dimensions are based on a Rolled Rail Strip Seal Joint. If the Contractor elects to use the Welded Rail Strip Seal Joint, deck dimensions may require adjustments to satisfy the detail on sheet S-49 of S-80.

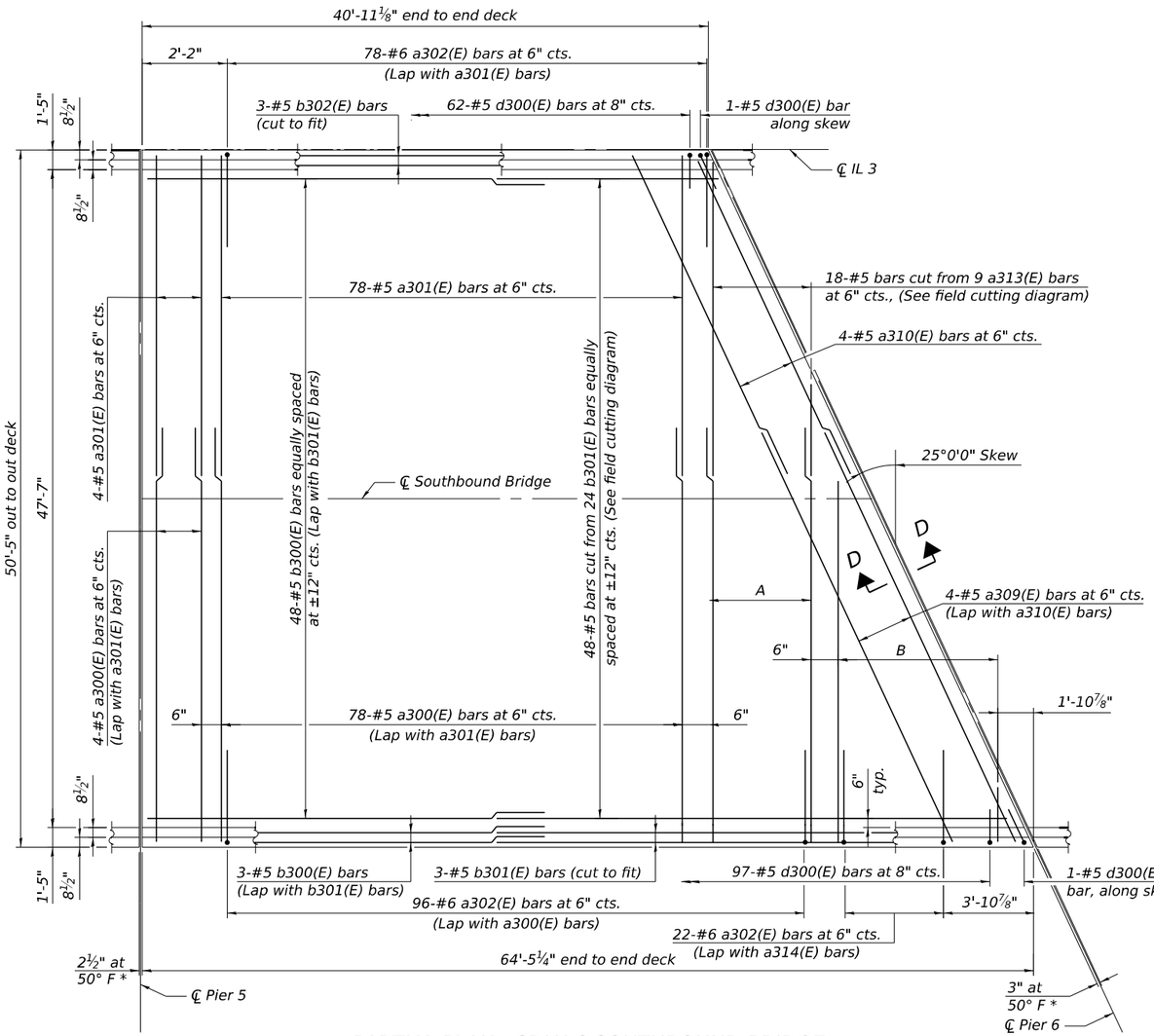

PARTIAL PLAN - SPAN 6 SOUTHBOUND BRIDGE

(Top reinforcements shown only)

A) 18-#5 a300(E) bars at 6" cts.
(Lap with a313(E) bars)

B) 26-#5 bars cut from 13 a314(E) bars
at 6" cts. (See field cutting diagram)

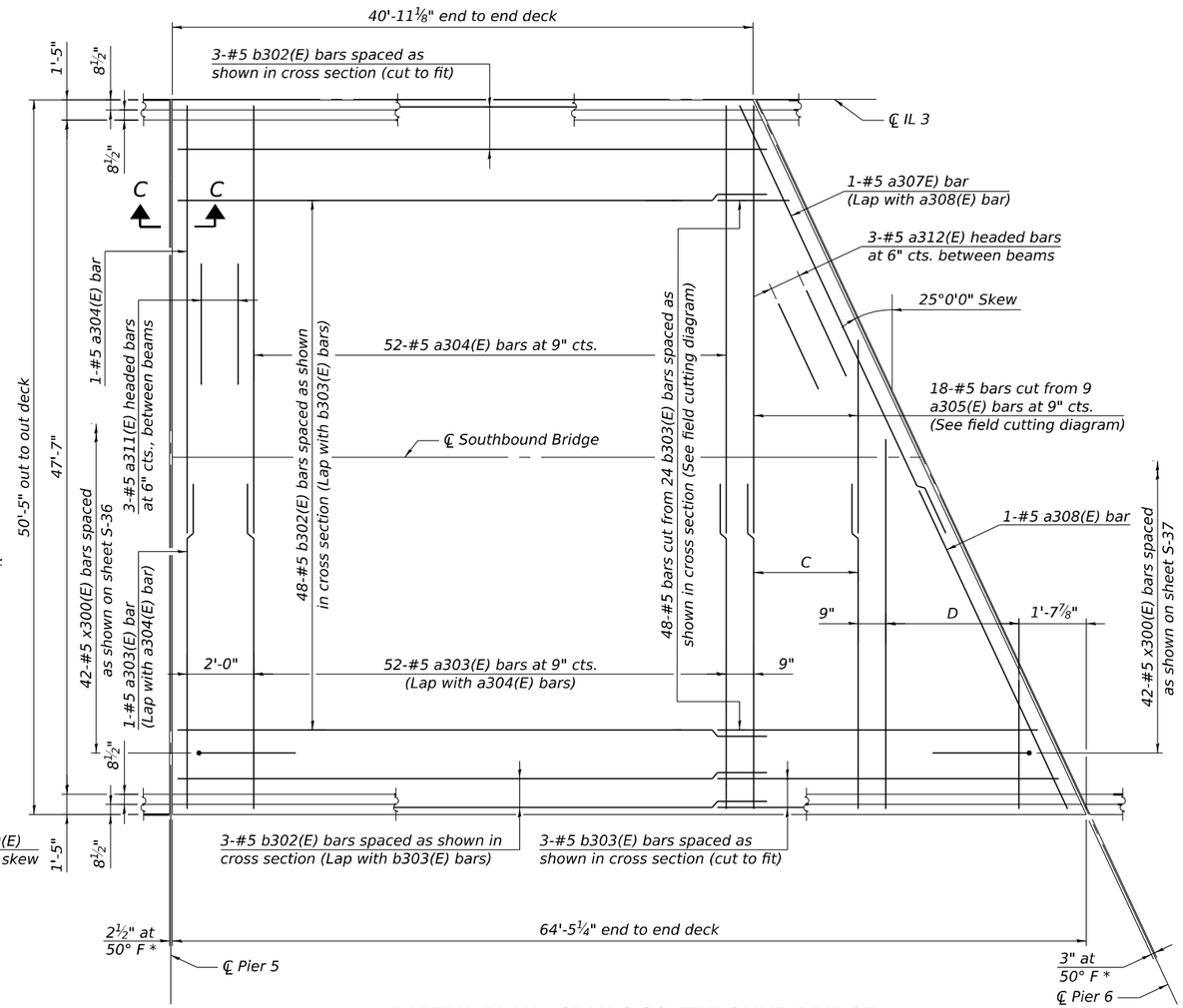

PARTIAL PLAN - SPAN 6 SOUTHBOUND BRIDGE

(Bottom reinforcements shown only)

C) 18-#5 a303(E) bars at 9" cts.
(Lap with a305(E) bars)

D) 12-#5 bars cut from 6 a306(E) bars at 9"
cts. (See field cutting diagram)

MODEL: Sheet View
FILE NAME: pw://hq-pwint01.a-e.transyscorp.com:transyscorp-pw1/Documents/Projects_2020/CH401/401200165/Bridge/304.02 - Sheet Files/0600202-D876N65-030-SUPERSTRUCTURE PLAN 3.dgn

TRANSYSTEMS	USER NAME = mbmcwhorter	DESIGNED - RMJ	REVISED -	STATE OF ILLINOIS DEPARTMENT OF TRANSPORTATION	SUPERSTRUCTURE PLAN 3 STRUCTURE NO. 060-0202	F.A.P. RTE.	SECTION	COUNTY	TOTAL SHEETS / SHEET NO.
		CHECKED - IIP	REVISED -			0002	(103,104)BR-1	MADISON	178 / 107
	PLOT SCALE =	DRAWN - RMJ	REVISED -					CONTRACT NO. 76N65	
	PLOT DATE = 11/13/2025	CHECKED - IIP	REVISED -		SHEET S-28 OF S-80 SHEETS		ILLINOIS	FED. AID PROJECT	

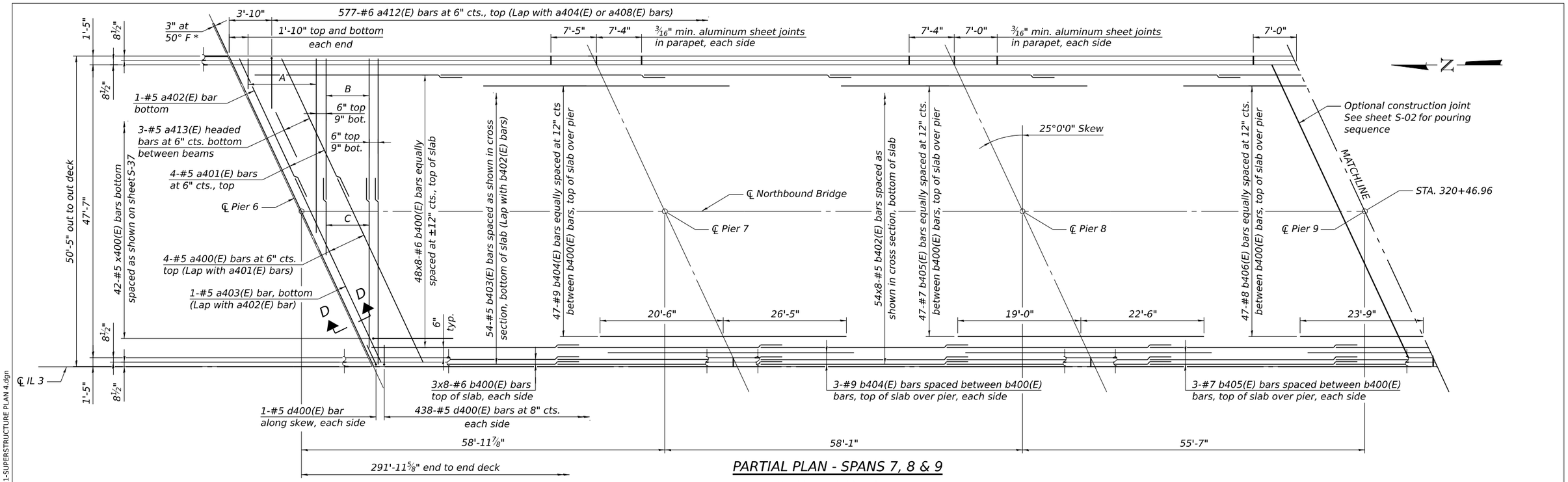

PARTIAL PLAN - SPANS 7, 8 & 9

Northbound bridge shown
Southbound bridge similar

A) 21-#5 bars cut from 21 a404(E) bars at 6" cts., top (See field cutting diagram)

20-#5 bars cut from 20 a405(E) bars at 9" cts., bottom (See field cutting diagram)

B) 23-#5 a408(E) bars at 6" cts., top (Lap with a406(E) bars)

9-#5 a411(E) bars at 9" cts., bottom (Lap with a407(E) bars)

C) 23-#5 bars cut from 23 a406(E) bars at 6" cts., top (See field cutting diagram)

9-#5 bars cut from 9 a407(E) bars at 9" cts., bottom (See field cutting diagram)

MINIMUM BAR LAP

#5 bar = 3'-6"
#6 bar = 3'-7"

Notes:
See sheet S-43 of S-80 for superstructure details, field cutting diagrams, and Bill of Material.
Bars indicated thus 20x3-#5 etc. indicates 20 lines of bars with 3 lengths per line.

For Section D-D, see sheet S-37 of S-80.

Dimensions are based on Rolled Rail Strip Seal Joint. If the Contractor elects to use the Welded Rail Strip Seal Joint, deck dimensions may require adjustments to satisfy the details on sheet S-49 of S-80.

* Dimension showing concrete opening.
For joint opening, see sheet S-49 of S-80.

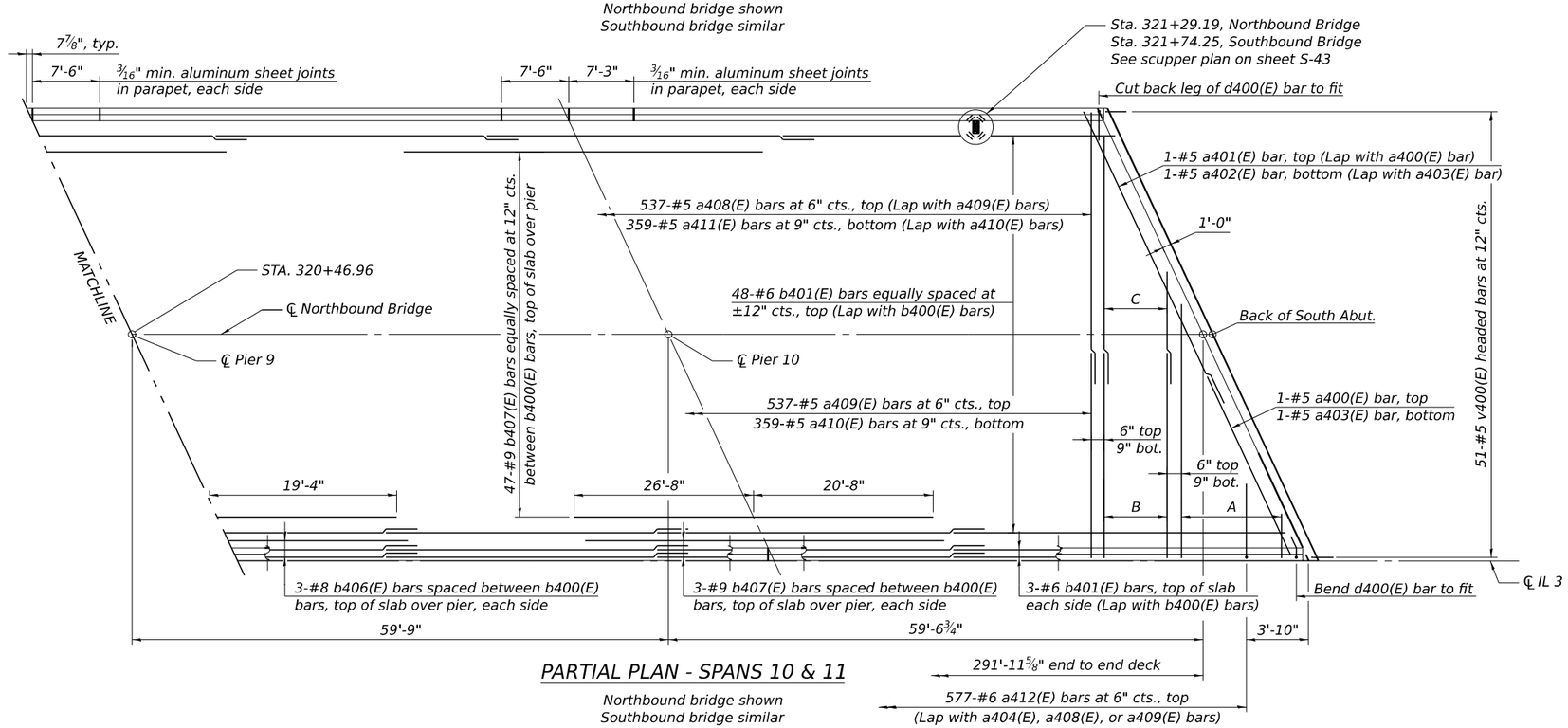

PARTIAL PLAN - SPANS 10 & 11

Northbound bridge shown
Southbound bridge similar

MODEL: Sheet View
FILE NAME: pw://hq-pwint01.a-e.transyscorp.com:transyscorp-pw1/Documents/Projects_2020/CH401/401200165/Bridge/304.02 - Sheet Files/0600202-D876N65-031-SUPERSTRUCTURE PLAN 4.dgn

TRANSYSTEMS

USER NAME = mbmcwhorter	DESIGNED - RMJ	REVISED -	
	CHECKED - IIP	REVISED -	
PLOT SCALE =	DRAWN - RMJ	REVISED -	
PLOT DATE = 11/13/2025	CHECKED - IIP	REVISED -	

STATE OF ILLINOIS
DEPARTMENT OF TRANSPORTATION

SUPERSTRUCTURE PLAN 4
STRUCTURE NO. 060-0202

SHEET S-29 OF S-80 SHEETS

F.A.P. RTE.	SECTION	COUNTY	TOTAL SHEETS	SHEET NO.
0002	(103,104)BR-1	MADISON	178	108
		CONTRACT NO. 76N65		
	ILLINOIS	FED. AID PROJECT		

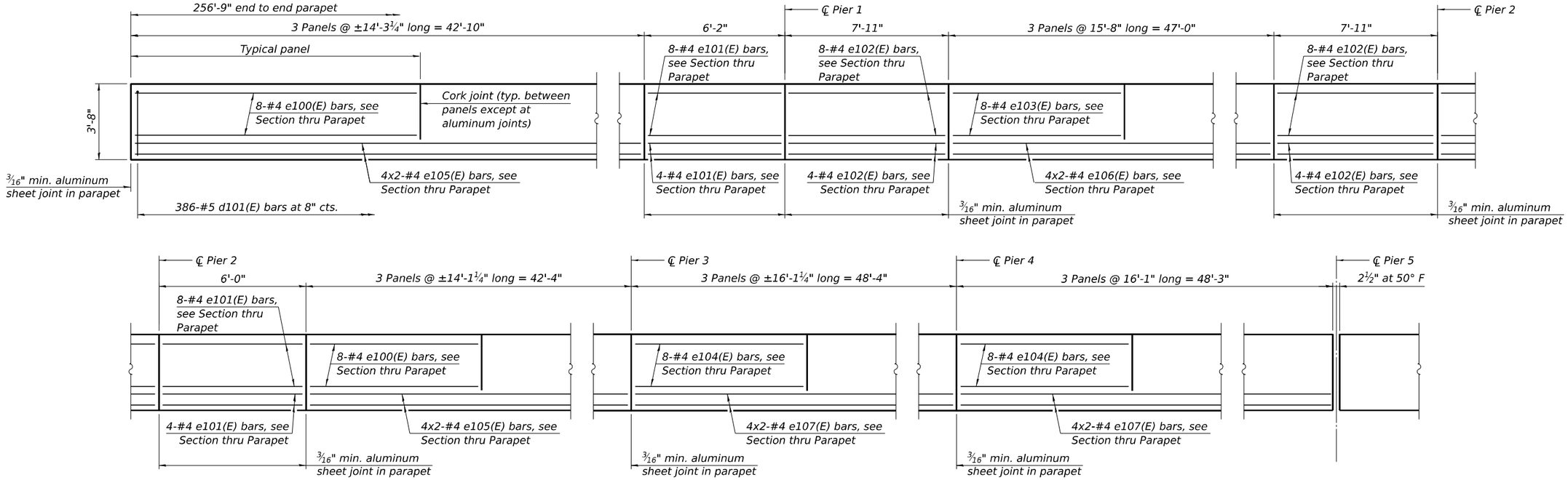

INSIDE ELEVATION OF EAST AND WEST PARAPET - SPANS 1-5

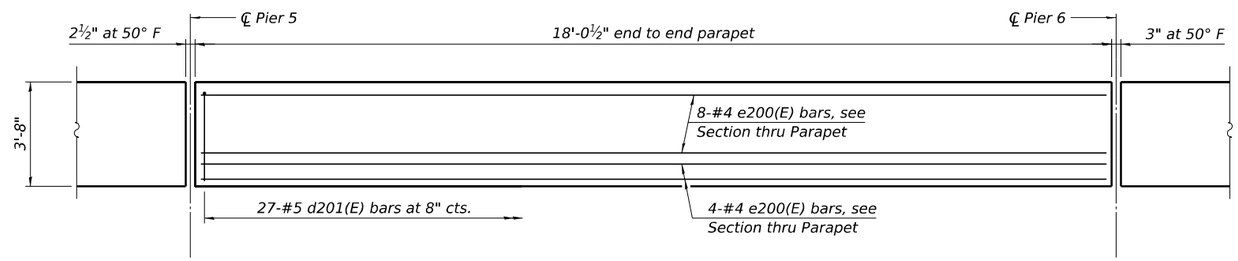

INSIDE ELEVATION OF EAST PARAPET - SPAN 6 NORTHBOUND BRIDGE

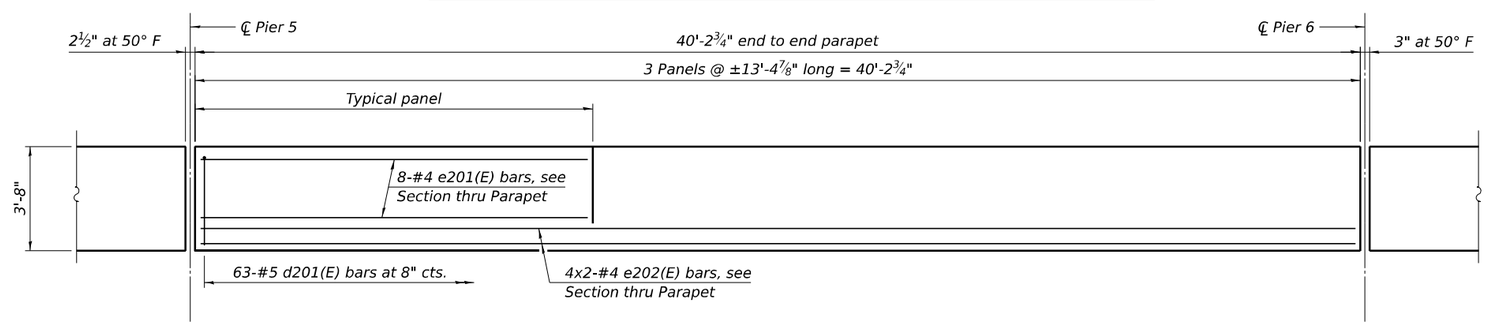

INSIDE ELEVATION OF WEST PARAPET - SPAN 6 NORTHBOUND BRIDGE

MINIMUM BAR LAP

#4 bar = 2'-8"

MODEL: Sheet View
FILE NAME: pw://hq-pwint01.a-e.transyscorp.com:transyscorp-pw1/Documents/Projects_2020/CH401/401200165/Bridge/304.02 - Sheet Files/06000202-D876N65-032-PARAPET ELEVATIONS 1

TRANSYSTEMS

USER NAME = mbmcwhorter	DESIGNED - RMJ	REVISED -	
	CHECKED - IIP	REVISED -	
PLOT SCALE =	DRAWN - RMJ	REVISED -	
PLOT DATE = 11/13/2025	CHECKED - IIP	REVISED -	

STATE OF ILLINOIS
DEPARTMENT OF TRANSPORTATION

PARAPET ELEVATIONS 1
STRUCTURE NO. 060-0202

SHEET S-30 OF S-80 SHEETS

F.A.P. RTE.	SECTION	COUNTY	TOTAL SHEETS	SHEET NO.
0002	(103,104)BR-1	MADISON	178	109
		CONTRACT NO. 76N65		
		ILLINOIS	FED. AID PROJECT	

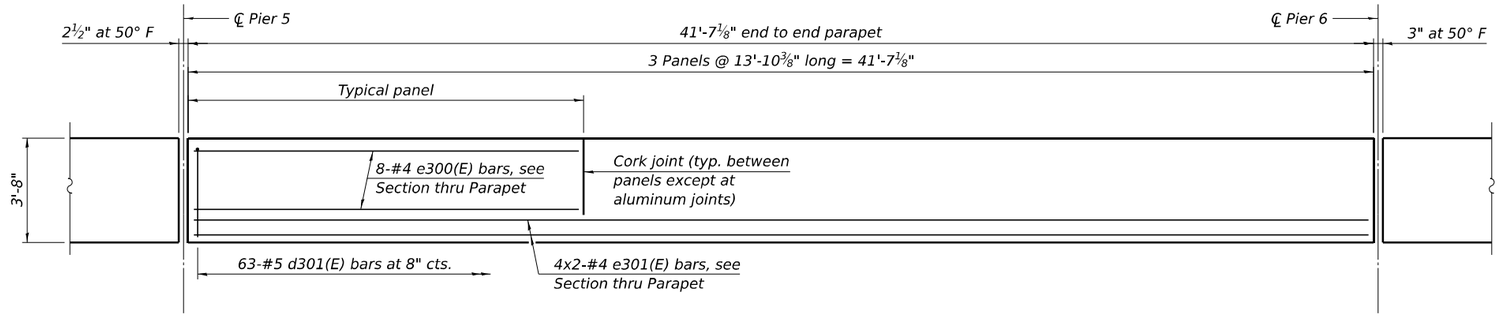

INSIDE ELEVATION OF EAST PARAPET - SPAN 6 SOUTHBOUND BRIDGE

MINIMUM BAR LAP

#4 bar = 2'-8"

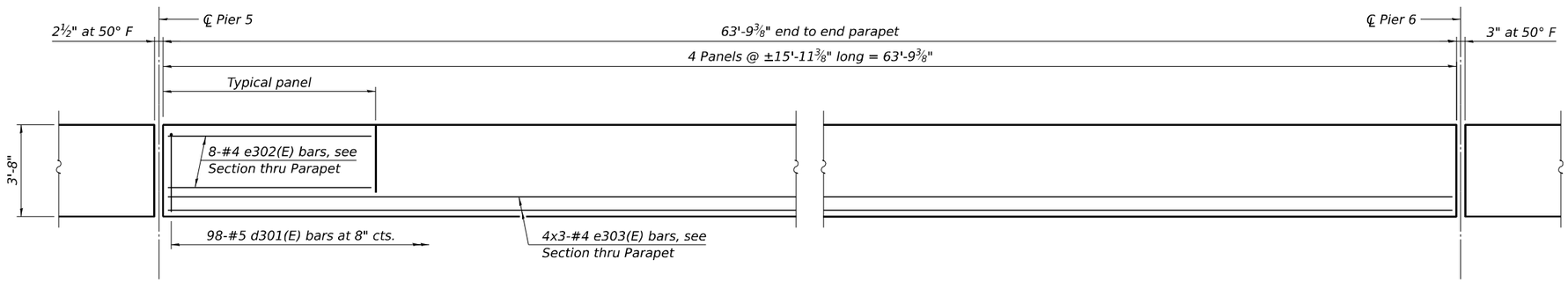

INSIDE ELEVATION OF WEST PARAPET - SPAN 6 SOUTHBOUND BRIDGE

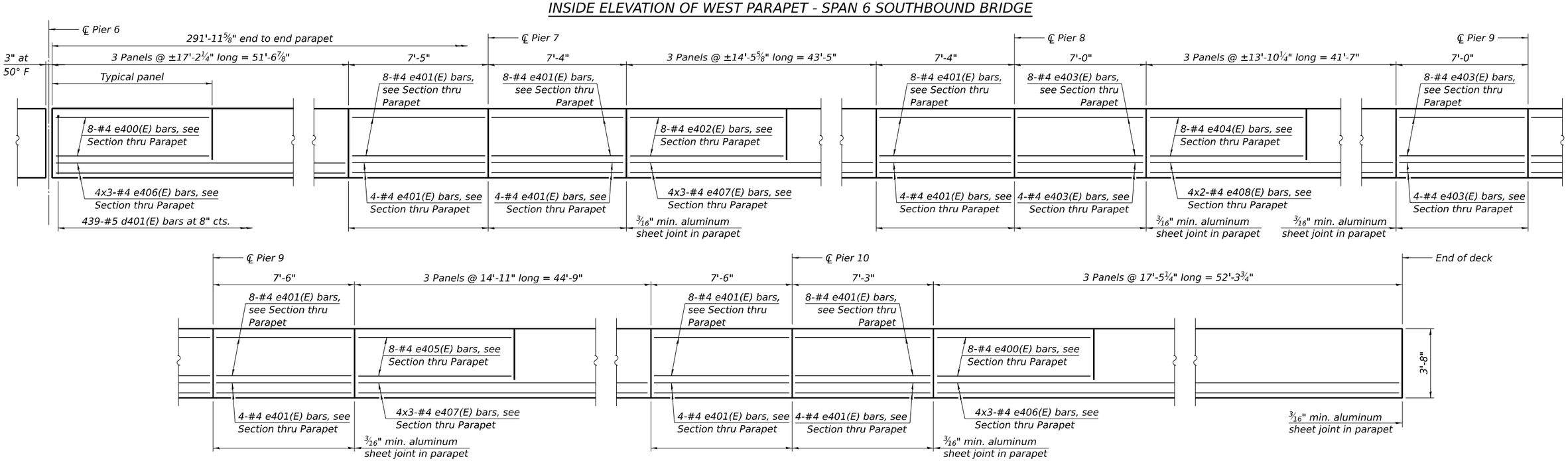

INSIDE ELEVATION OF EAST AND WEST PARAPET - SPANS 7-11

MODEL: Sheet View
FILE NAME: pw://hq-pwint01.a-e.transyscorp.com:transyscorp-pw1/Documents/Projects_2020/CH401/401200165/Bridge/304.02 - Sheet Files/0600202-D876N65-033-PARAPET ELEVATIONS 2

TRANSYSTEMS

USER NAME = mbmcwhorter	DESIGNED - RMJ	REVISED -	
	CHECKED - IIP	REVISED -	
PLOT SCALE =	DRAWN - RMJ	REVISED -	
PLOT DATE = 11/13/2025	CHECKED - IIP	REVISED -	

STATE OF ILLINOIS
DEPARTMENT OF TRANSPORTATION

PARAPET ELEVATIONS 2
STRUCTURE NO. 060-0202

SHEET S-31 OF S-80 SHEETS

F.A.P. RTE.	SECTION	COUNTY	TOTAL SHEETS	SHEET NO.
0002	(103,104)BR-1	MADISON	178	110
		CONTRACT NO. 76N65		
		ILLINOIS	FED. AID PROJECT	

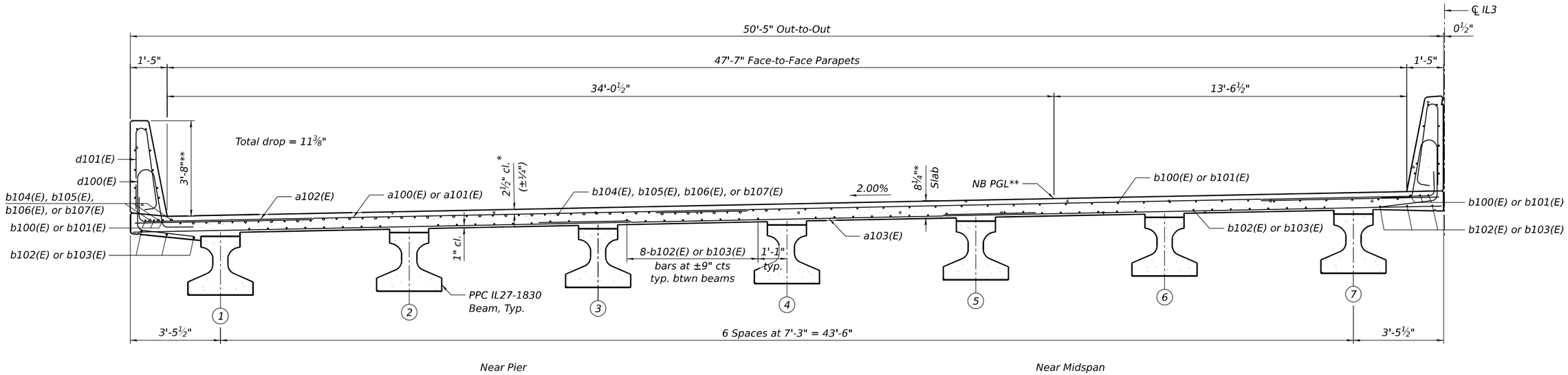

PARTIAL SECTION - SPANS 1-5

(Looking South)
Northbound bridge shown
Southbound bridge similar

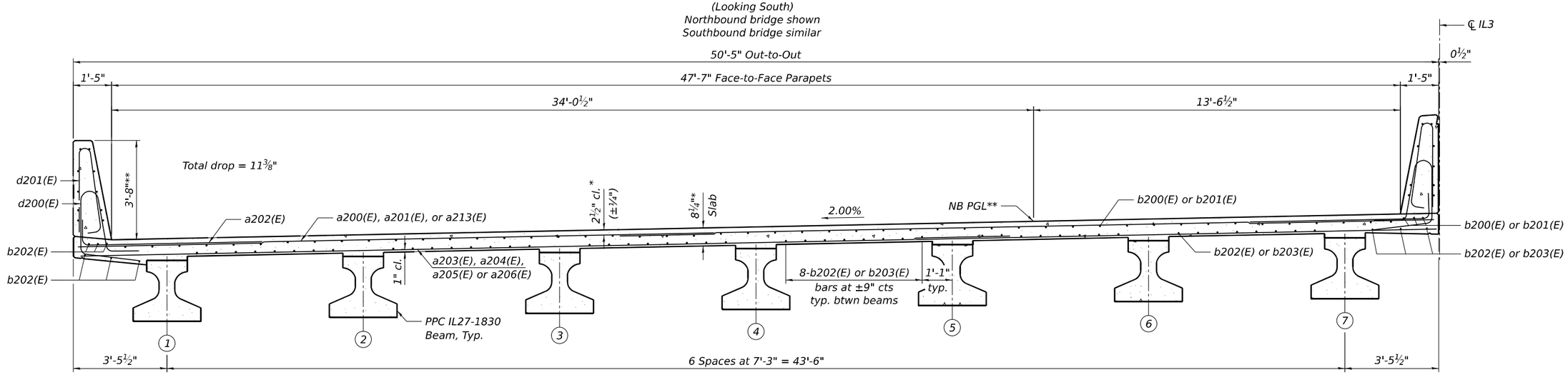

PARTIAL SECTION - NORTHBOUND BRIDGE SPAN 6

(Looking South)

* Prior to grinding
** After grinding

MODEL: Sheet View
FILE NAME: pw://hq-pwint01.a-e.transyscorp.com:transyscorp-pw1/Documents/Projects_2020/CH401/401200165/Bridge/304.02 - Sheet Files/0600202-D876N65-034-SUPERSTRUCTURE CROSS SECTION 1

TRANSYSTEMS

USER NAME = mbmcwhorter	DESIGNED - RMJ	REVISED -	
	CHECKED - IIP	REVISED -	
PLOT SCALE =	DRAWN - AWT	REVISED -	
PLOT DATE = 11/13/2025	CHECKED - IIP	REVISED -	

STATE OF ILLINOIS
DEPARTMENT OF TRANSPORTATION

SUPERSTRUCTURE CROSS SECTION 1
STRUCTURE NO. 060-0202

SHEET S-32 OF S-80 SHEETS

F.A.P. RTE.	SECTION	COUNTY	TOTAL SHEETS	SHEET NO.
0002	(103,104)BR-1	MADISON	178	111
		CONTRACT NO. 76N65		
		ILLINOIS	FED. AID PROJECT	

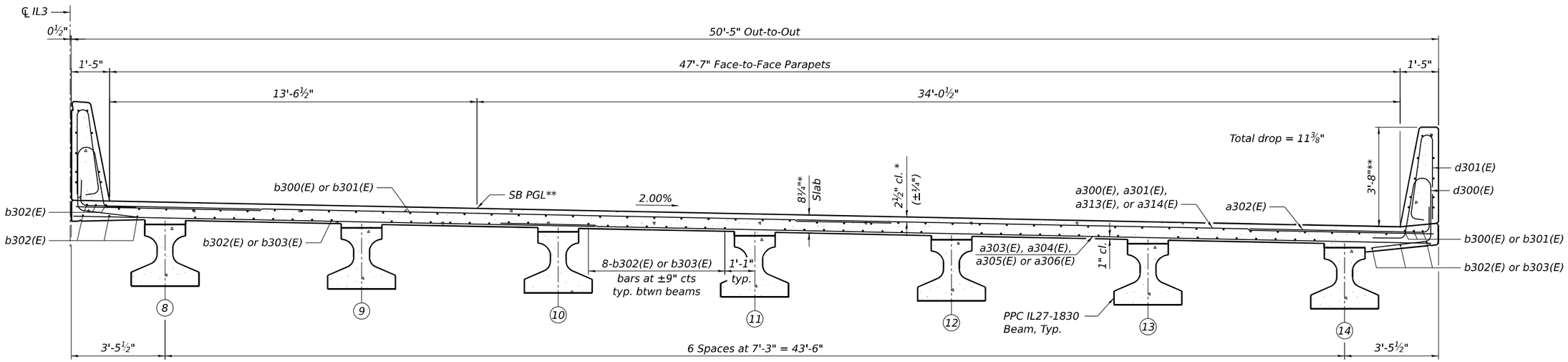

PARTIAL SECTION - SOUTHBOUND BRIDGE SPAN 6

(Looking South)

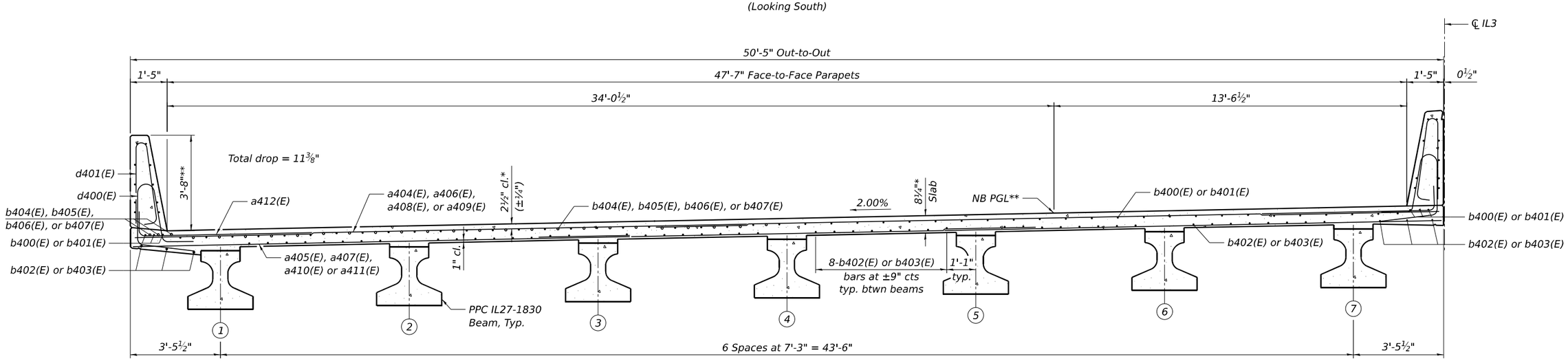

Near Midspan

PARTIAL SECTION - SPANS 7-11

Near Pier

(Looking South)
Northbound bridge shown
Southbound bridge similar

* Prior to grinding
** After grinding

MODEL: Sheet View
FILE NAME: pw://hq-pwint01.a-e.transyscorp.com:transyscorp-pw1/Documents/Projects_2020/CH401/401200165/Bridge/304.02 - Sheet Files/06000202-D876N65-035-SUPERSTRUCTURE CROSS SECTION 2

TRANSYSTEMS

USER NAME = mbmcwhorter	DESIGNED - RMJ	REVISED -	
	CHECKED - IIP	REVISED -	
PLOT SCALE =	DRAWN - JSC	REVISED -	
PLOT DATE = 11/13/2025	CHECKED - AWT	REVISED -	

STATE OF ILLINOIS
DEPARTMENT OF TRANSPORTATION

SUPERSTRUCTURE CROSS SECTION 2
STRUCTURE NO. 060-0202

SHEET S-33 OF S-80 SHEETS

F.A.P. RTE.	SECTION	COUNTY	TOTAL SHEETS	SHEET NO.
0002	(103,104)BR-1	MADISON	178	112
		CONTRACT NO. 76N65		
	ILLINOIS	FED. AID PROJECT		

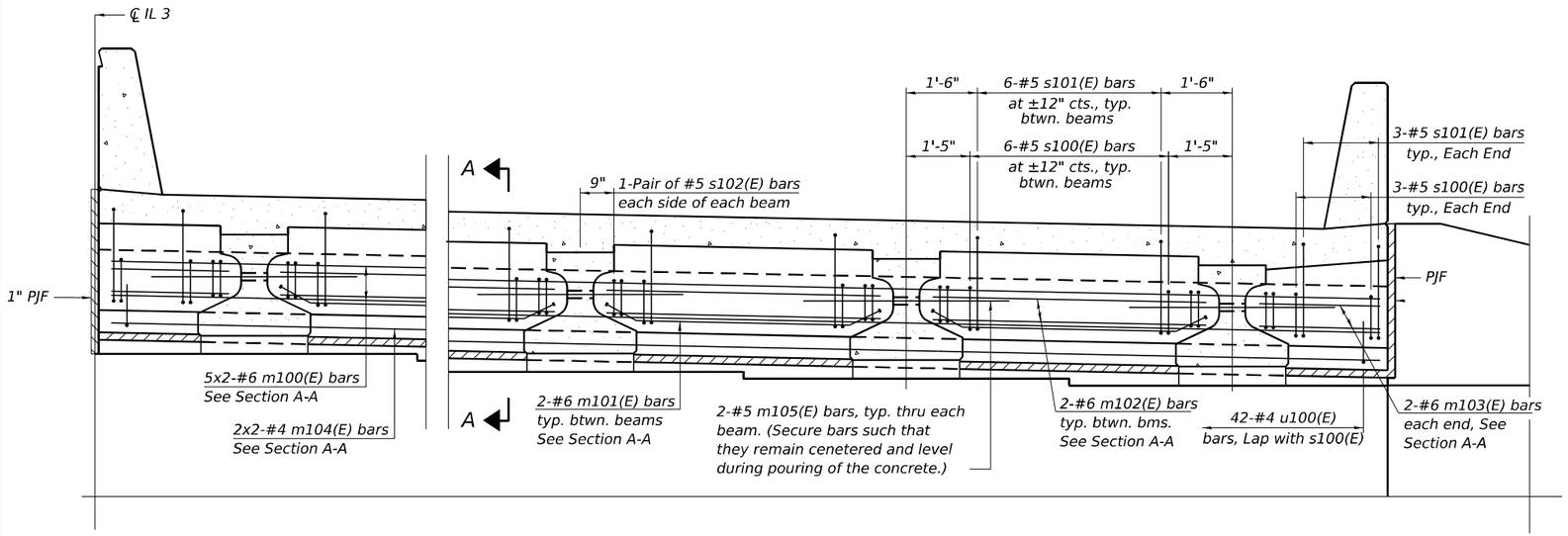

PARTIAL ELEVATION OF DIAPHRAGM AT N. ABUTMENT

(Northbound shown, southbound similar)

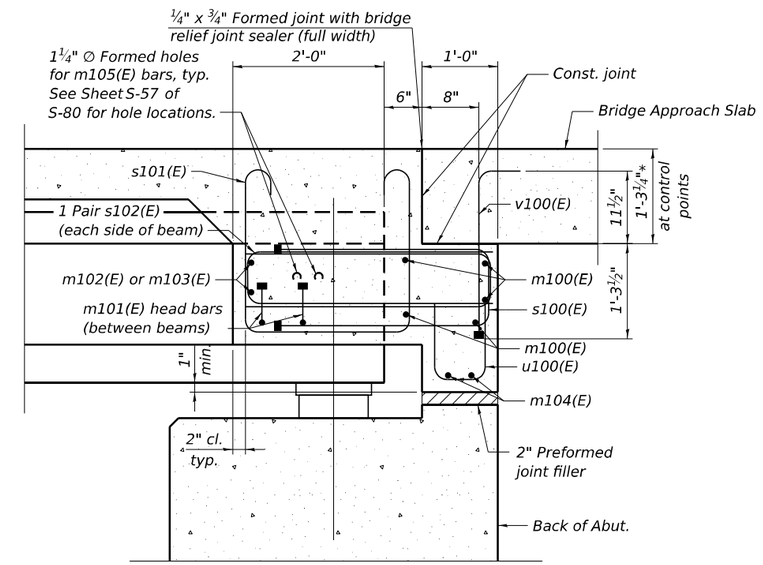

SECTION A-A

* Prior to grinding

MINIMUM BAR LAP

#4 bar = 2'-5"
#6 bar = 5'-0"

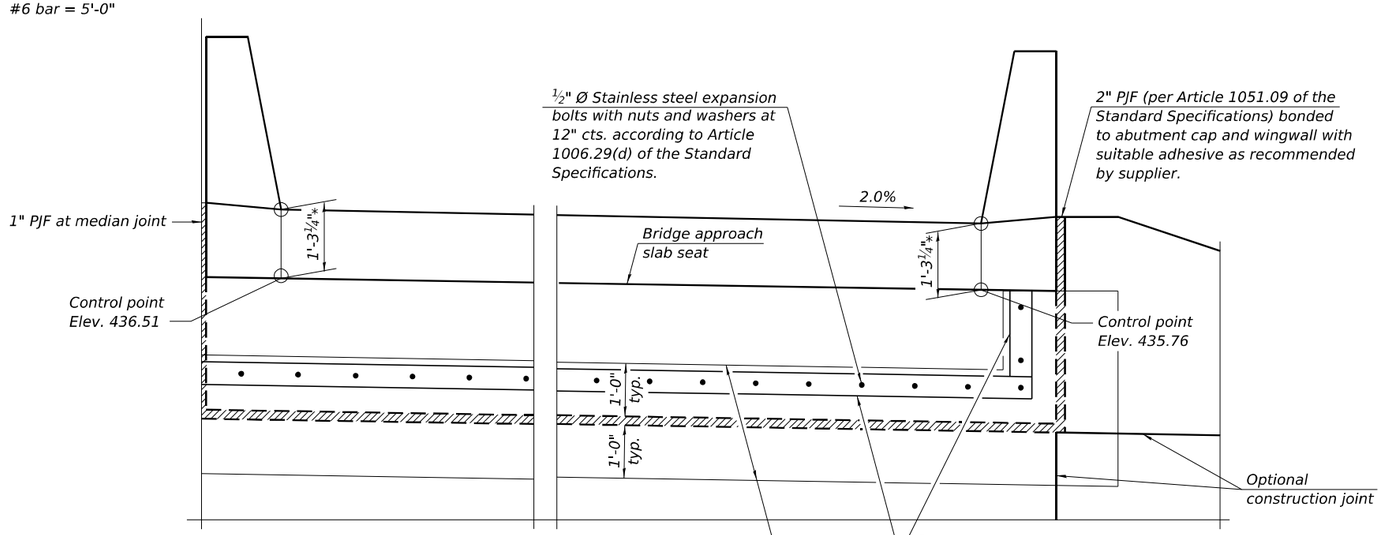

Note:
Cost of fabric reinforced elastomeric mat, galvanized plate, stainless steel expansion bolts with nuts and washers and installation are included in the cost of Concrete Superstructure.

ELEVATION

(Looking at back of abutment)

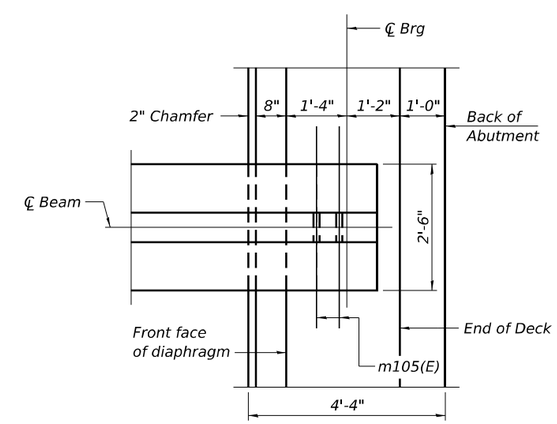

PLAN AT N. ABUTMENT

(Showing bottom flange of beam)

Notes:
See sheet S-40 of S-80 for superstructure details and Bill of Material.
The approach slab seat shall have a constant slope determined from the control points shown.

MODEL: Default
FILE NAME: pw://hq-pwint01.a-e.transyscorp.com:transyscorp-pw1/Documents/Projects_2020/CH401/401200165/Bridge/304.04 - EFK/Sheet Files/0600202-D876N65-037-ABUTMENT DIAPHRAGM DETAILS 1.dgn

11/13/2025 9:59:11 AM

EFK•Moen
Civil Engineering Design

USER NAME = mbmcwhorter	DESIGNED - KRH	REVISED -	
	CHECKED - ACB	REVISED -	
PLOT SCALE =	DRAWN - KRH	REVISED -	
PLOT DATE = 11/13/2025	CHECKED - ACB	REVISED -	

STATE OF ILLINOIS
DEPARTMENT OF TRANSPORTATION

NORTH ABUTMENT DIAPHRAGM DETAILS
STRUCTURE NO. 060-0202

SHEET S-34 OF S-80 SHEETS

F.A.P. RTE.	SECTION	COUNTY	TOTAL SHEETS	SHEET NO.
0002	(103,104)BR-1	MADISON	178	113
		CONTRACT NO. 76N65		
		ILLINOIS	FED. AID PROJECT	

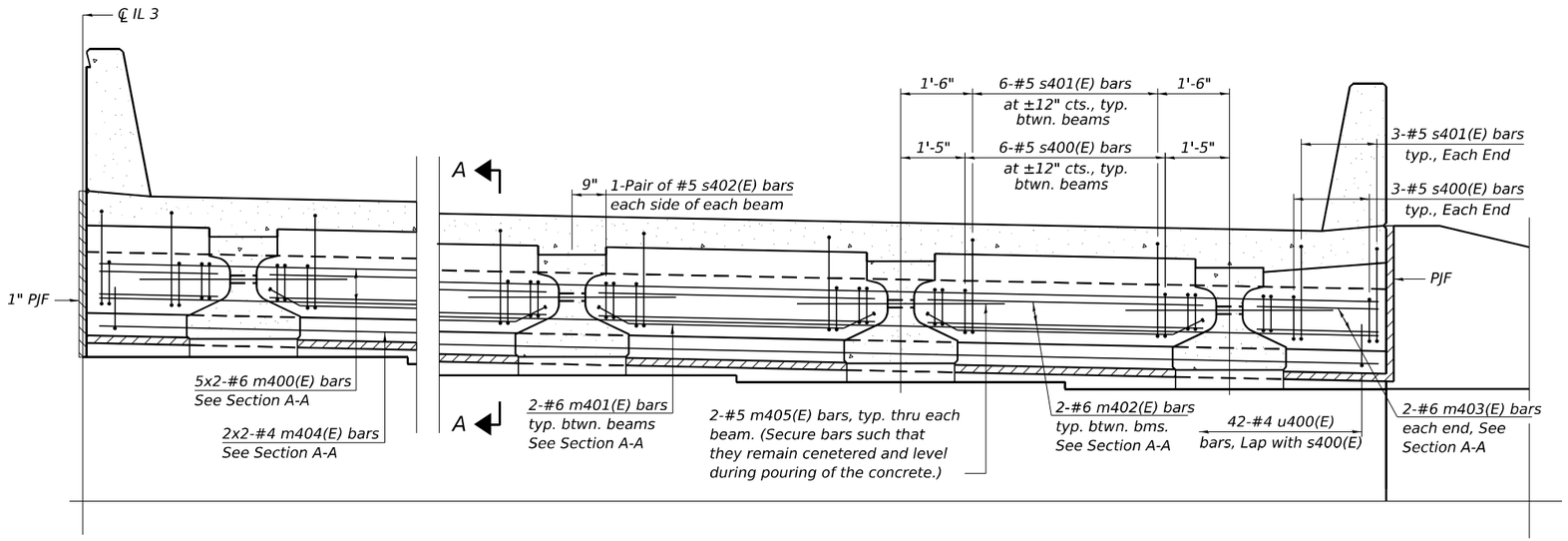

PARTIAL ELEVATION OF DIAPHRAGM AT S. ABUTMENT

(Southbound shown, northbound similar)

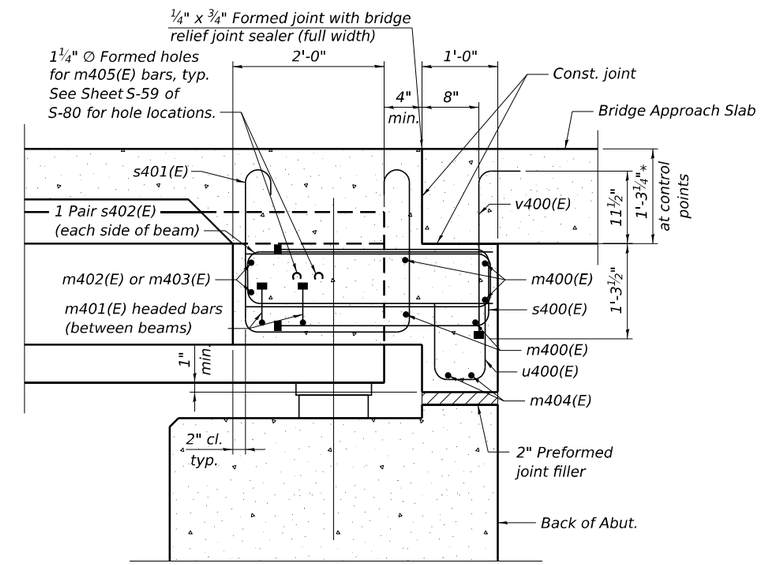

SECTION A-A

(at Rt.∠'s)

* Prior to grinding

MINIMUM BAR LAP

#4 bar = 2'-5"
#6 bar = 5'-0"

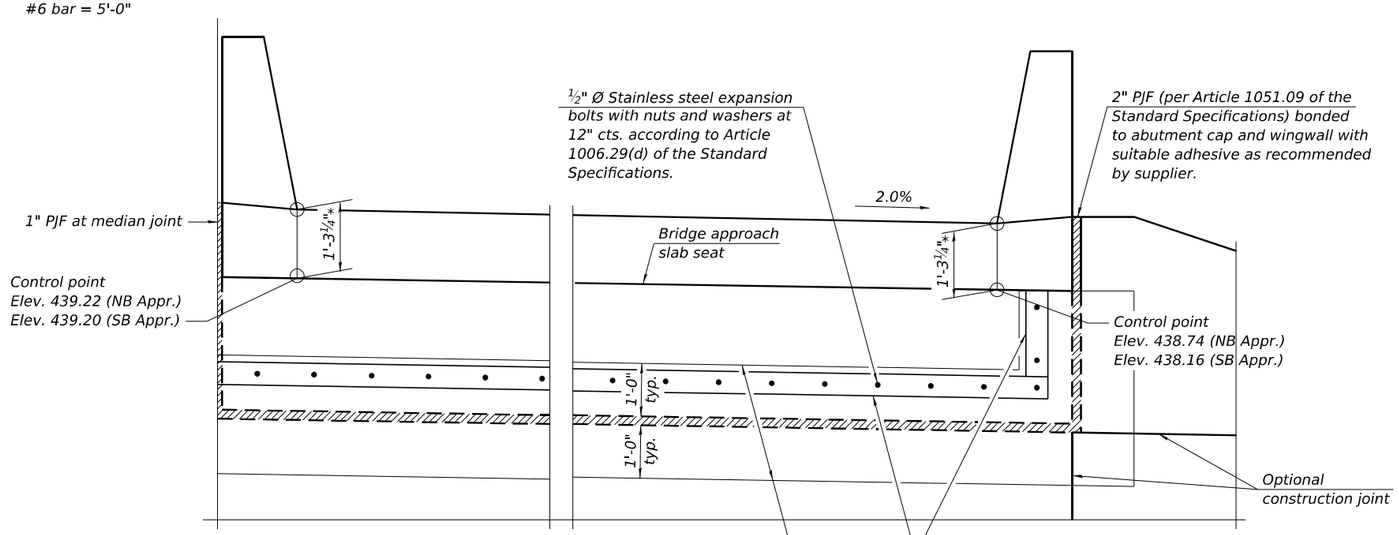

Note:
Cost of fabric reinforced elastomeric mat, galvanized plate, stainless steel expansion bolts with nuts and washers and installation are included in the cost of Concrete Superstructure.

ELEVATION

(Looking at back of abutment)

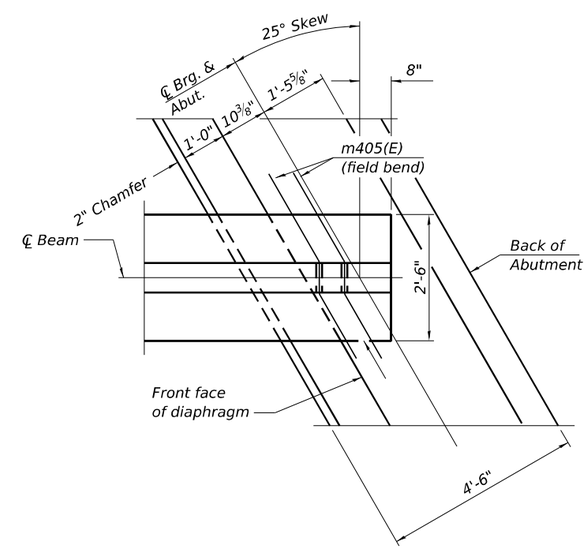

PLAN AT S. ABUTMENT

(Showing bottom flange of beam)

Notes:
See sheet S-43 of S-80 for superstructure details and Bill of Material.
The s400(E), s401(E) and s402(E) bars shall be placed parallel to the beams. Spacing for these bars shall be at right angles to the beams.
The approach slab seat shall have a constant slope determined from the control points shown.

MODEL: Default
FILE NAME: pw://hq-pwint01.a-e.transyscorp.com:transyscorp-pw1/Documents/Projects_2020/CH401/401200165/Bridge/304.04 - EFK/Sheet Files/0600202-D876N65-038-ABUTMENT DIAPHRAGM DETAILS 2.dgn

EFK•Moen
Civil Engineering Design

USER NAME = mbmcwhorter	DESIGNED - KRH	REVISED -	
	CHECKED - ACB	REVISED -	
PLOT SCALE =	DRAWN - KRH	REVISED -	
PLOT DATE = 11/13/2025	CHECKED - ACB	REVISED -	

STATE OF ILLINOIS
DEPARTMENT OF TRANSPORTATION

SOUTH ABUTMENT DIAPHRAGM DETAILS
STRUCTURE NO. 060-0202

SHEET S-35 OF S-80 SHEETS

F.A.P. RTE.	SECTION	COUNTY	TOTAL SHEETS	SHEET NO.
0002	(103,104)BR-1	MADISON	178	114
		CONTRACT NO. 76N65		
		ILLINOIS	FED. AID PROJECT	

11/13/2025 9:59:13 AM

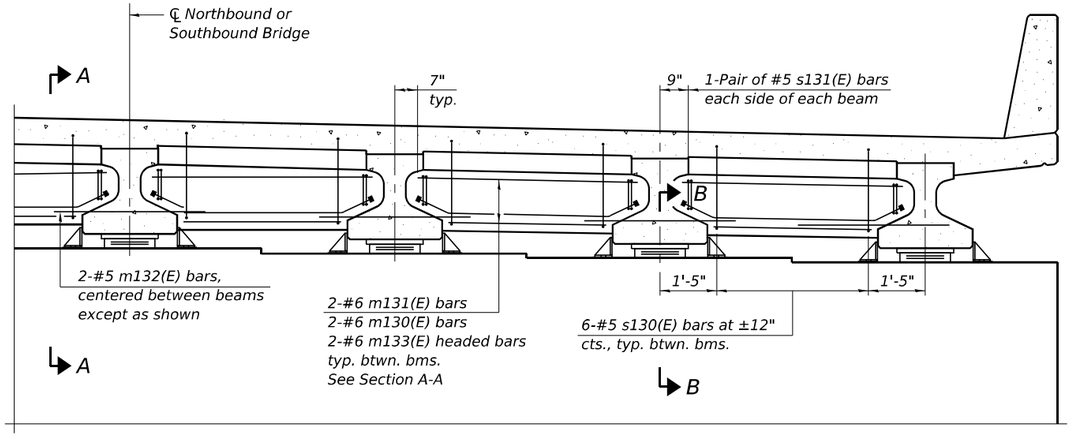

DIAPHRAGM AT PIER 1, 3 & 4

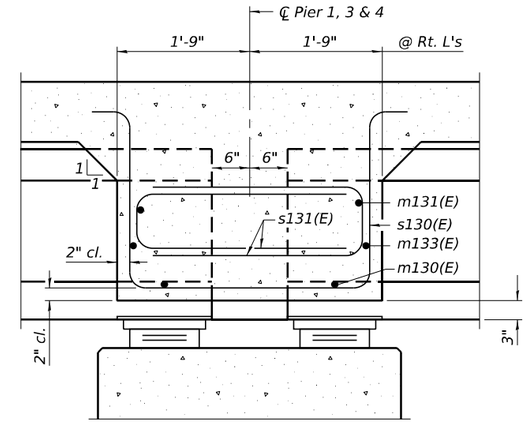

SECTION A-A

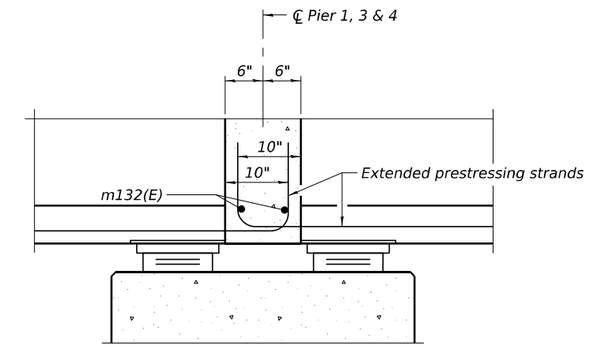

SECTION B-B

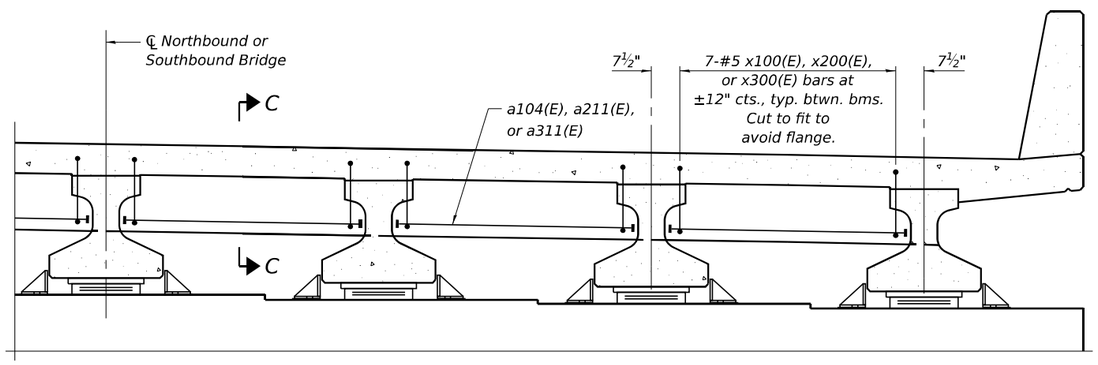

DIAPHRAGM AT PIER 5

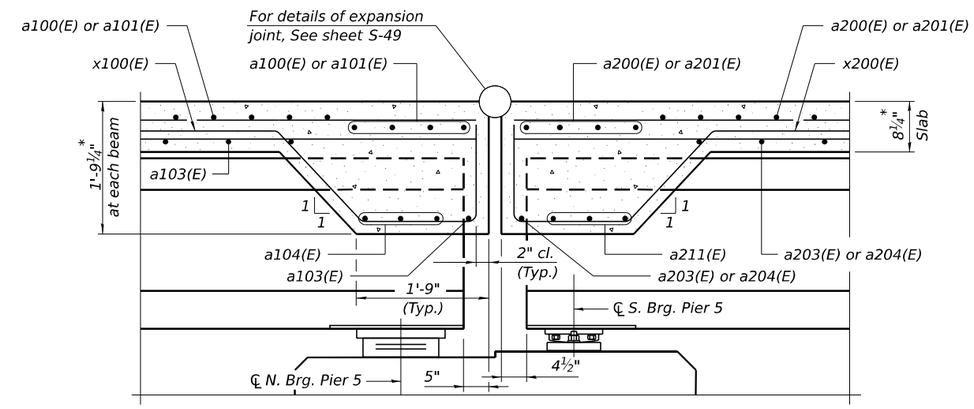

SECTION C-C - NORTHBOUND BRIDGE

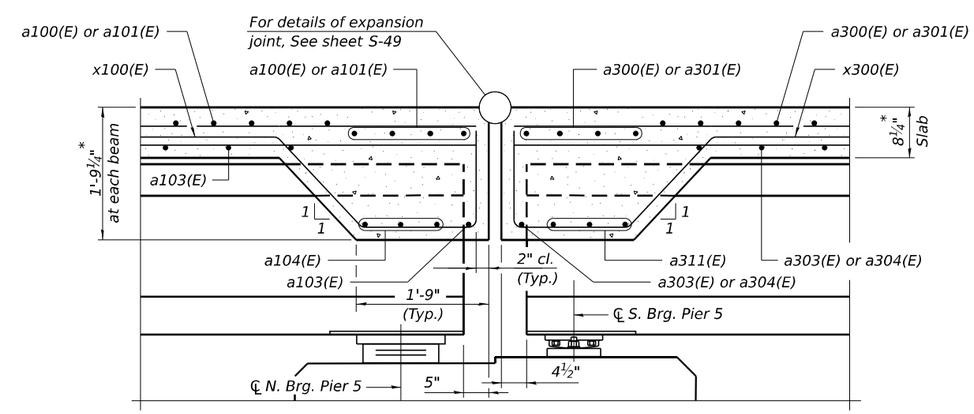

SECTION C-C - SOUTHBOUND BRIDGE

* Prior to grinding

Notes:

See sheet S-40, S-41, and S-42 of S-80 for superstructure details and Bill of Material.

The s130(E) and s131(E) bars shall be placed parallel to the beams.

Spacing for these bars shall be at right angles to the beams.

Horizontal dimensions for Section A-A, Section B-B, and Section C-C are along ℄ of beam unless otherwise noted.

TRANSYSTEMS

USER NAME = mbmcwhorter	DESIGNED - IIP	REVISED -	
	CHECKED - IS	REVISED -	
PLOT SCALE =	DRAWN - IIP	REVISED -	
PLOT DATE = 11/13/2025	CHECKED - IS	REVISED -	

STATE OF ILLINOIS
DEPARTMENT OF TRANSPORTATION

DIAPHRAGM OVER PIER DETAILS 1
STRUCTURE NO. 060-0202

SHEET S-36 OF S-80 SHEETS

F.A.P. RTE.	SECTION	COUNTY	TOTAL SHEETS	SHEET NO.
0002	(103,104)BR-1	MADISON	178	115
		CONTRACT NO. 76N65		
	ILLINOIS	FED. AID PROJECT		

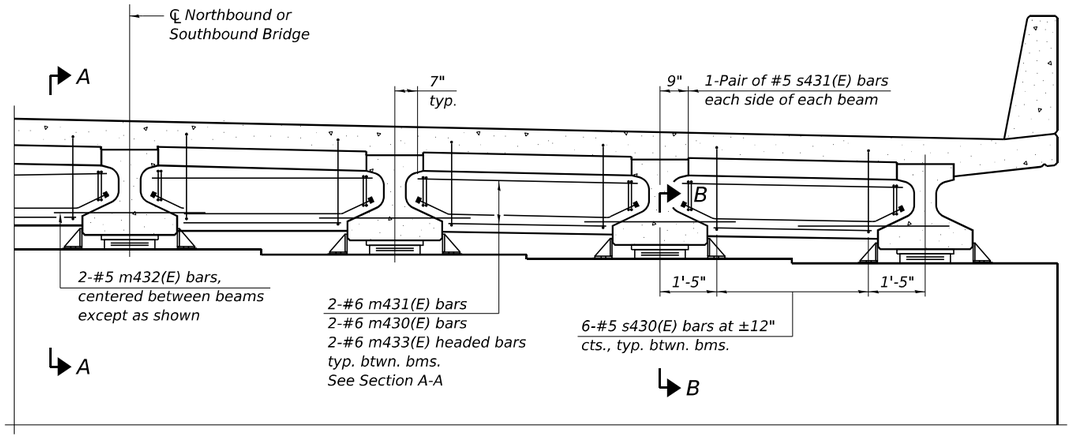

DIAPHRAGM AT PIER 7, 8 & 10

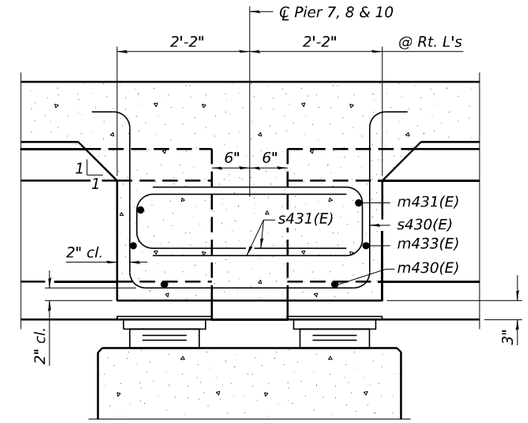

SECTION A-A

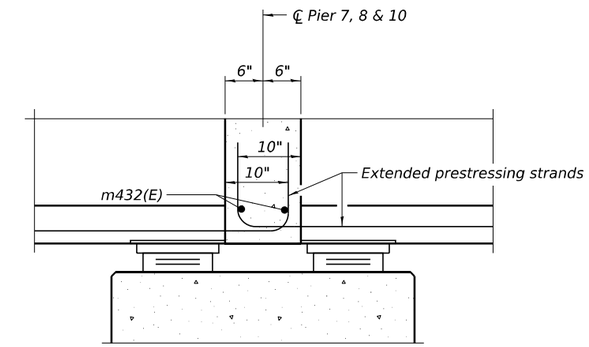

SECTION B-B

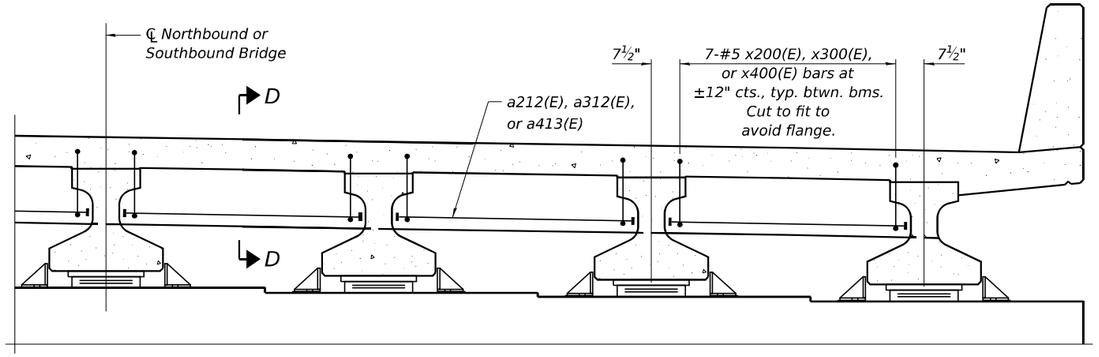

DIAPHRAGM AT PIER 6

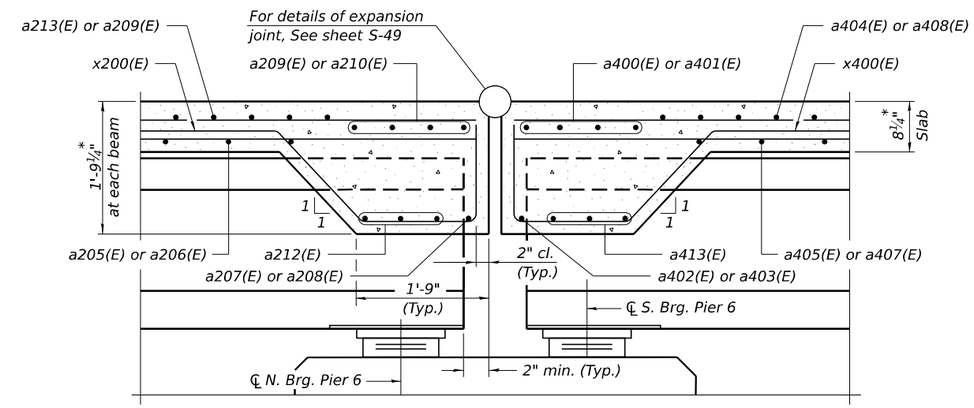

SECTION D-D - NORTHBOUND BRIDGE

(at Rt. ∠'s)

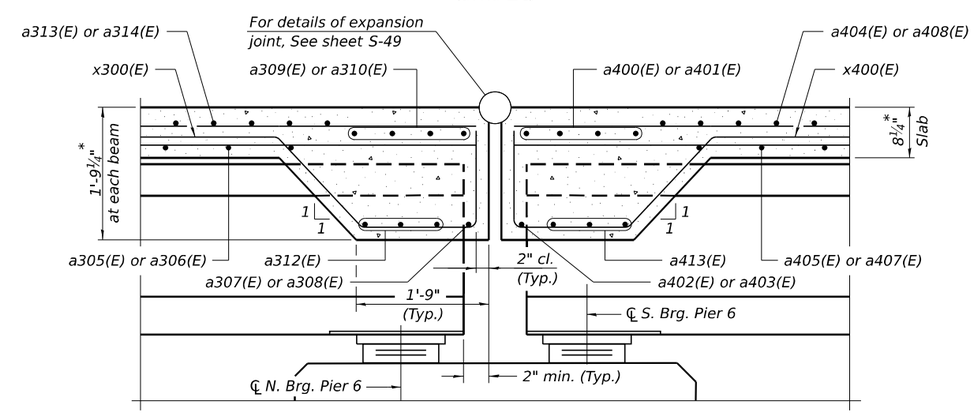

SECTION D-D - SOUTHBOUND BRIDGE

(at Rt. ∠'s)

* Prior to grinding

Notes:
See sheet S-41, S-42 , and S-43 of S-80 for superstructure details and Bill of Material.
The s430(E), s431(E), x200(E), x300(E), and x400(E) bars shall be placed parallel to the beams. Spacing for these bars shall be at right angles to the beams.
Horizontal dimensions for Section A-A, Section B-B, and Section C-C are along ℄ of beam unless otherwise noted.

MODEL: Sheet View
FILE NAME: pw://hq-pwint01.a-e.transyscorp.com:transyscorp-pw1/Documents/Projects_2020/CH401/401200165/Bridge/304.02 - Sheet Files/06000202-D876N65-039-DIAPHRAGM OVER PIER DETAILS 2.dgn

TRANSYSTEMS

USER NAME = mbmcwhorter	DESIGNED - IIP	REVISED -	
	CHECKED - IS	REVISED -	
PLOT SCALE =	DRAWN - JSC	REVISED -	
PLOT DATE = 11/13/2025	CHECKED - IS	REVISED -	

STATE OF ILLINOIS
DEPARTMENT OF TRANSPORTATION

DIAPHRAGM OVER PIER DETAILS 2
STRUCTURE NO. 060-0202

SHEET S-37 OF S-80 SHEETS

F.A.P. RTE.	SECTION	COUNTY	TOTAL SHEETS	SHEET NO.
0002	(103,104)BR-1	MADISON	178	116
		CONTRACT NO. 76N65		
	ILLINOIS	FED. AID PROJECT		

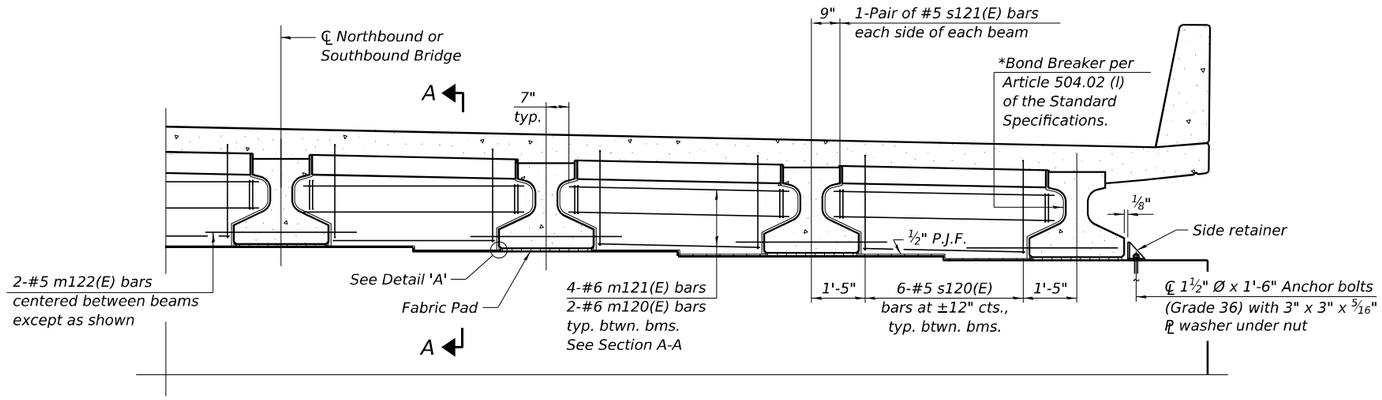

DIAPHRAGM AT PIER 2

*Bonded to sides of beams embedded into diaphragm.

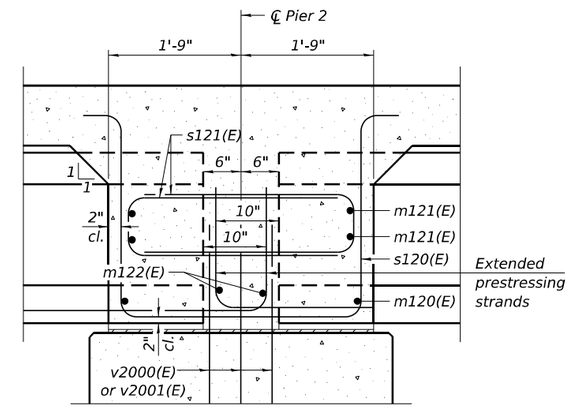

SECTION A-A

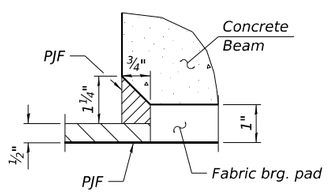

DETAIL 'A'

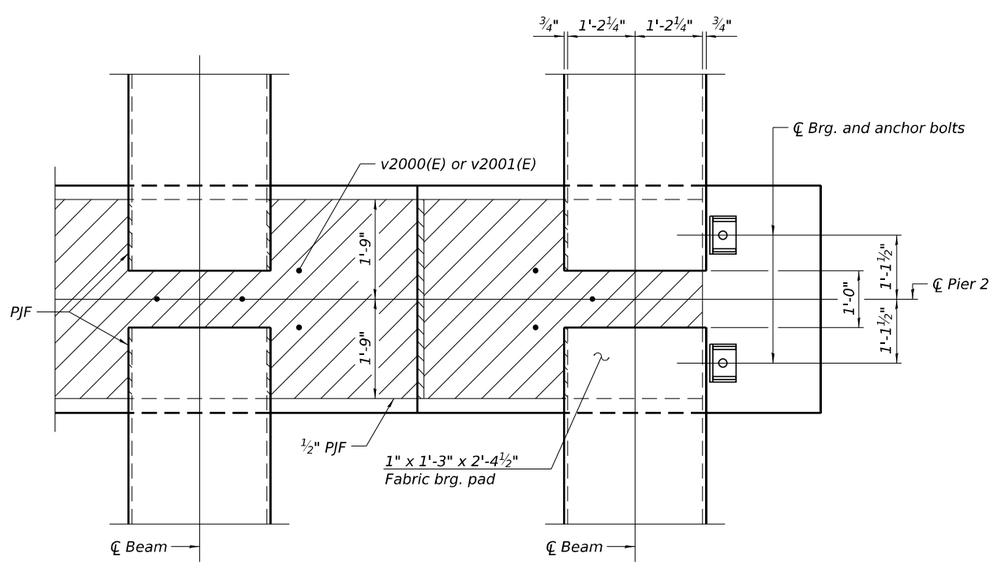

PLAN AT PIER 2

(Showing bearing pads and PJF details)

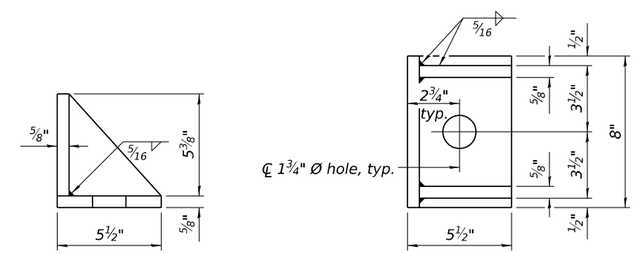

SIDE RETAINER

(2 required each side of pier).
Equivalent rolled angle with stiffeners
will be allowed in lieu of welded plates.

Notes:

See sheet S-40 of S-80 for superstructure details and Bill of Material.

Cost of side retainer and anchor bolts shall be included with Concrete Structures.

Anchor bolts and side retainers shall be according to Article 521.06 of the Standard Specifications. Side retainers shall be hot dip galvanized.

Anchor bolts and side retainers shall be installed as each exterior beam is erected unless an equivalent temporary means of lateral restraint is used.

See sheet S-71 of S-80 for v2000(E) and v2001(E) bar details.

MODEL: Sheet View
FILE NAME: pw://hq-pwint01.a-e.transyscorp.com:transyscorp-pw1/Documents/Projects_2020/CH401/401200165/Bridge/304.02 - Sheet Files/06000202-0876N65-040-DIAPHRAGM OVER FIXED PIER DETAILS 1.dgn

TRANSYSTEMS

USER NAME = mbmcwhorter	DESIGNED - IIP	REVISED -	
	CHECKED - IS	REVISED -	
PLOT SCALE =	DRAWN - IIP	REVISED -	
PLOT DATE = 11/13/2025	CHECKED - IS	REVISED -	

STATE OF ILLINOIS
DEPARTMENT OF TRANSPORTATION

DIAPHRAGM OVER FIXED PIER DETAILS 1
STRUCTURE NO. 060-0202

SHEET S-38 OF S-80 SHEETS

F.A.P. RTE.	SECTION	COUNTY	TOTAL SHEETS	SHEET NO.
0002	(103,104)BR-1	MADISON	178	117
		CONTRACT NO. 76N65		
	ILLINOIS	FED. AID PROJECT		

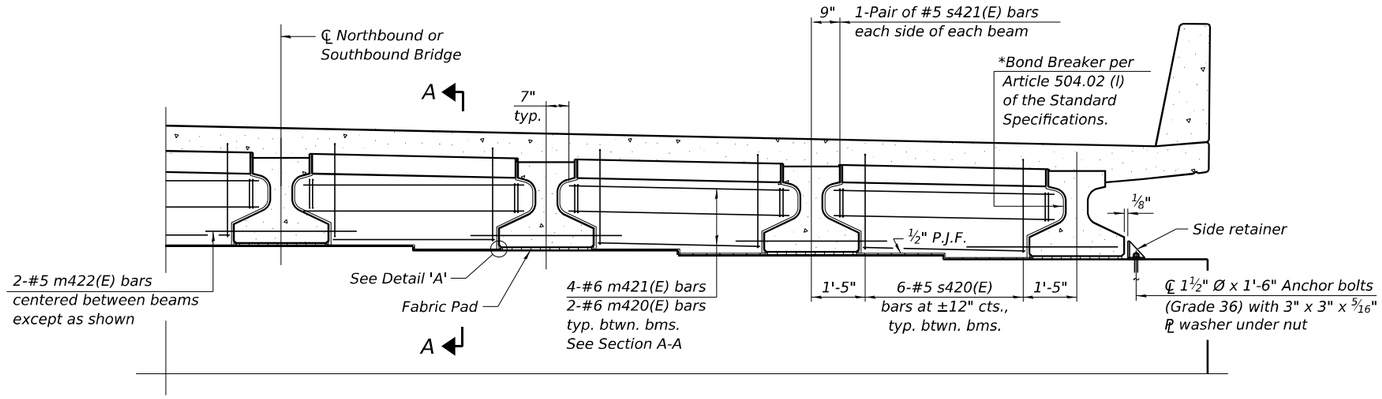

DIAPHRAGM AT PIER 9

*Bonded to sides of beams embedded into diaphragm.

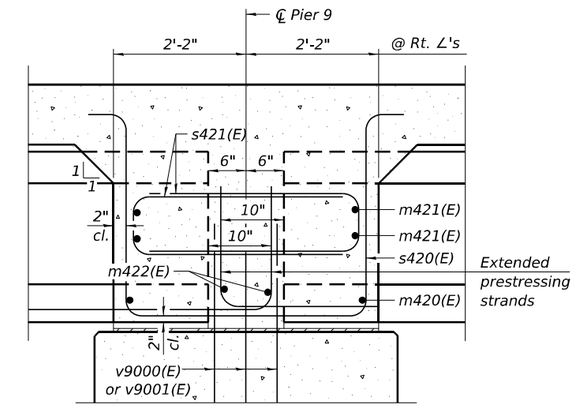

SECTION A-A

(Dimensions along ℄ of beam except as shown)

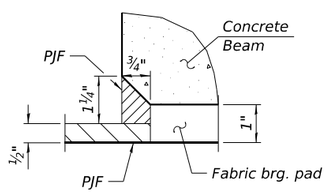

DETAIL 'A'

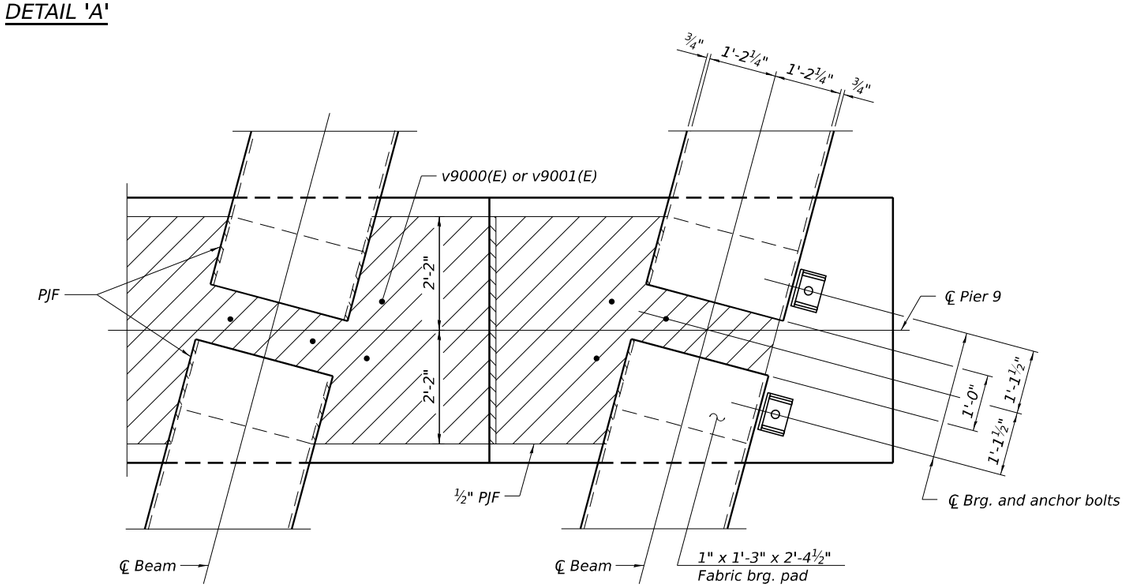

PLAN AT PIER 9

(Showing bearing pads and PJF details)

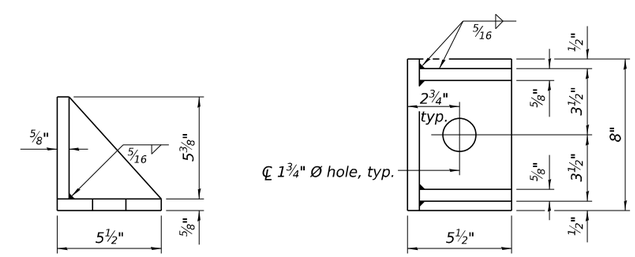

SIDE RETAINER

(2 required each side of pier).
Equivalent rolled angle with stiffeners
will be allowed in lieu of welded plates.

Notes:

See sheet S-42 of S-80 for superstructure details and Bill of Material.

Cost of side retainer and anchor bolts shall be included with Concrete Structures.

The s420(E) and s421(E) bars shall be placed parallel to the beams. Spacing for these bars shall be at right angles to the beams.

Anchor bolts and side retainers shall be according to Article 521.06 of the Standard Specifications. Side retainers shall be hot dip galvanized.

Anchor bolts and side retainers shall be installed as each exterior beam is erected unless an equivalent temporary means of lateral restraint is used.

See sheet S-78 of S-80 for v9000(E) and v9001(E) bar details.

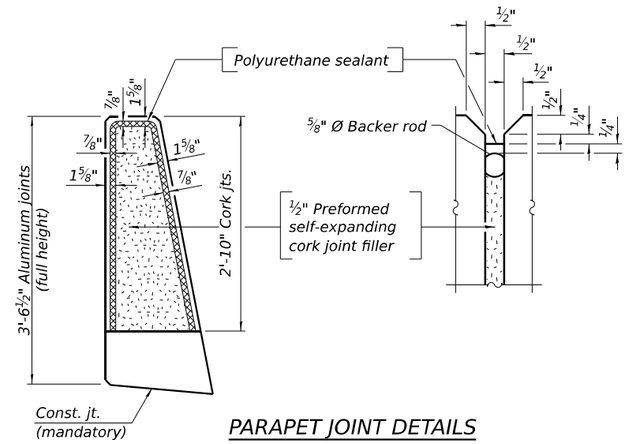

PARAPET JOINT DETAILS

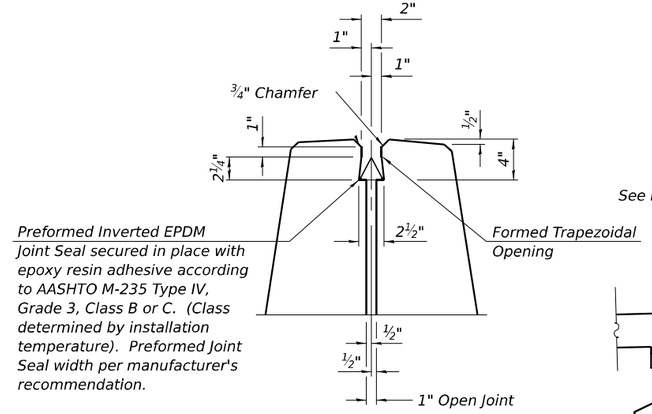

DETAIL A

Notes:

The 3/16" minimum aluminum sheet shall be ASTM B 209 alloy 3003-H14 and coated with 5 mils of either bitumen paint or epoxy paint to minimize reaction with wet concrete. Cost included with Concrete Superstructure.

The Polyurethane Sealant shall be according to Article 1050.04 of the Std. Spec. and the color shall be gray.

Bar terminators, paid for separately. See Total Bill of Material.

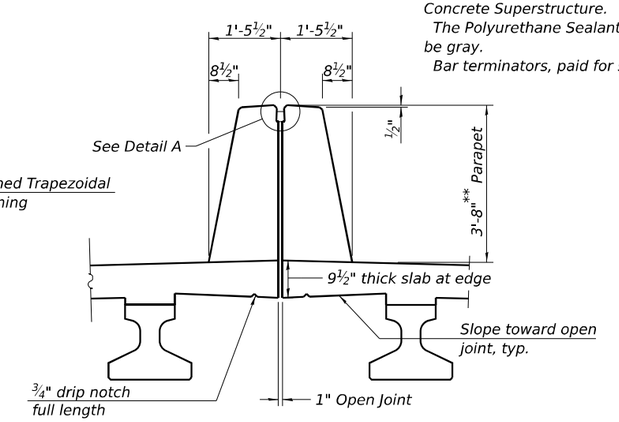

SECTION AT MEDIAN BARRIER

For reinforcement see section thru exterior parapet

SUPERSTRUCTURE - SPANS 1-5
BILL OF MATERIAL

Bill of Material for northbound bridge shown
Bill of Material for southbound bridge similar

Bar	No.	Size	Length	Shape
a100(E)	511	#5	30'-1"	
a101(E)	511	#5	23'-6"	
a102(E)	1006	#6	8'-4"	
a103(E)	1011	#5	19'-1"	
a104(E)	18	#5	6'-2"	
a105(E)	8	#5	1'-6"	
b100(E)	54	#6	18'-8"	
b101(E)	486	#6	30'-0"	
b102(E)	486	#5	30'-0"	
b103(E)	54	#5	17'-11"	
b104(E)	53	#8	46'-4"	
b105(E)	53	#8	41'-10"	
b106(E)	53	#6	40'-0"	
b107(E)	53	#7	43'-10"	
d100(E)	772	#5	8'-6"	
d101(E)	772	#5	7'-0"	
e100(E)	96	#4	13'-9"	
e101(E)	48	#4	5'-8"	
e102(E)	48	#4	7'-7"	
e103(E)	48	#4	15'-4"	
e104(E)	96	#4	15'-9"	
e105(E)	32	#4	22'-7"	
e106(E)	16	#4	24'-8"	
e107(E)	32	#4	25'-4"	
m100(E)	10	#6	27'-6"	
m101(E)	12	#6	6'-3"	
m102(E)	12	#6	6'-1"	
m103(E)	4	#6	2'-8"	
m104(E)	4	#4	26'-3"	
m105(E)	14	#5	4'-0"	
m120(E)	12	#6	4'-5"	
m121(E)	24	#6	6'-1"	
m122(E)	14	#5	4'-0"	
m130(E)	36	#6	4'-5"	
m131(E)	36	#6	6'-1"	
m132(E)	42	#5	4'-0"	
m133(E)	36	#6	6'-3"	
s100(E)	42	#5	6'-8"	
s101(E)	42	#5	7'-8"	
s102(E)	28	#5	7'-2"	
s120(E)	36	#5	10'-0"	
s121(E)	24	#5	6'-9"	
s130(E)	108	#5	9'-6"	
s131(E)	72	#5	6'-5"	
u100(E)	42	#4	2'-8"	
v100(E)	51	#5	3'-1"	
x100(E)	42	#5	7'-3"	
Reinforcement Bars, Epoxy Coated			Lbs.	143,320
Concrete Superstructure			Cu. Yds.	485.3

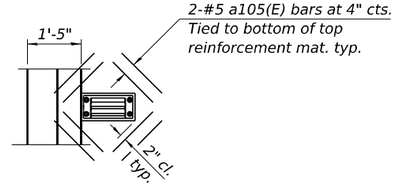

DS-11 SCUPPER PLAN

Note:

Cut longitudinal reinforcement to clear drainage scuppers.

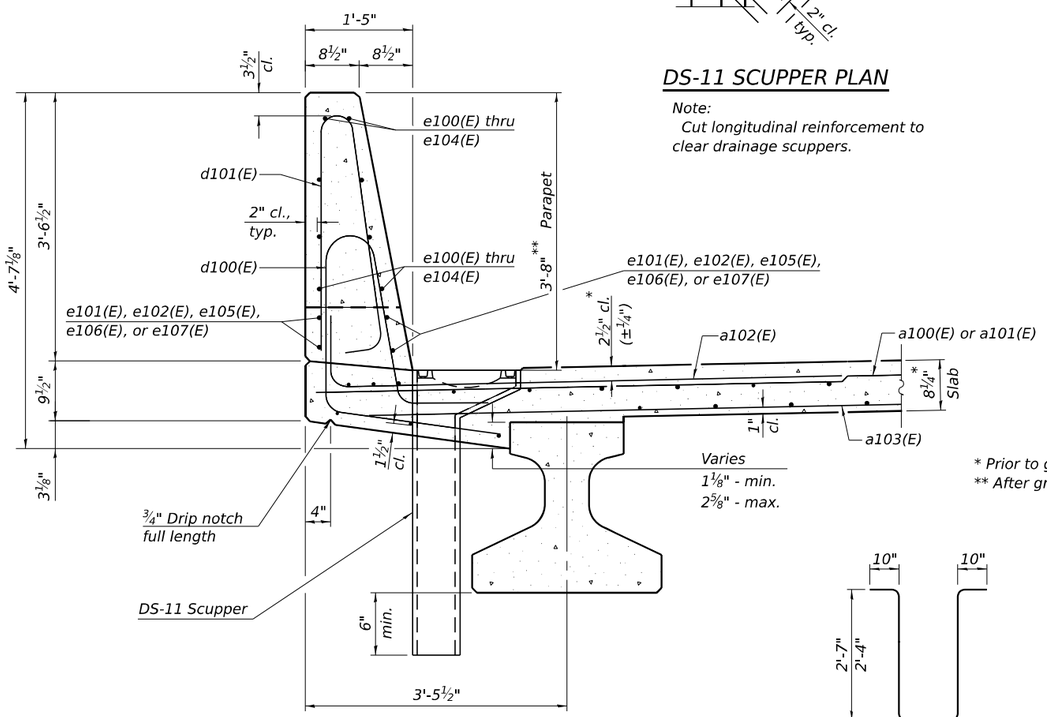

SECTION THRU EXTERIOR PARAPET

* Prior to grinding
** After grinding

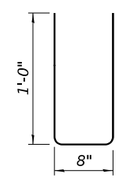

BAR u100(E)

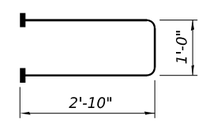

BAR s100(E)

(Headed. 84-#5 Bar terminators)

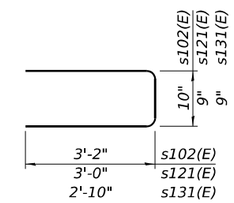

BARS s102(E), s121(E) & s131(E)

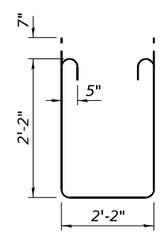

BAR s101(E)

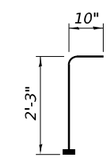

BAR v100(E)

(Headed. 52-#5 Bar terminators)

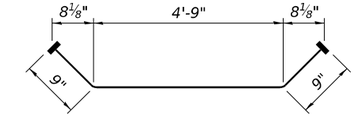

BARS m101(E) and m133(E)

(Headed. 96-#6 Bar terminators)

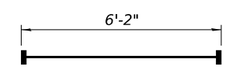

BAR a104(E)

(Headed. 36-#5 Bar terminators)

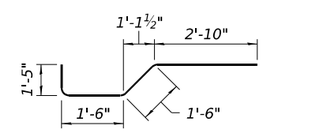

BAR x100(E)

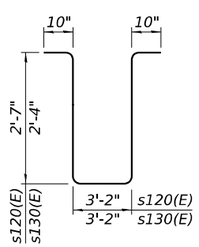

BARS s120(E) & s130(E)

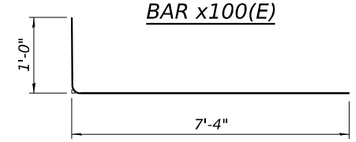

BAR a102(E)

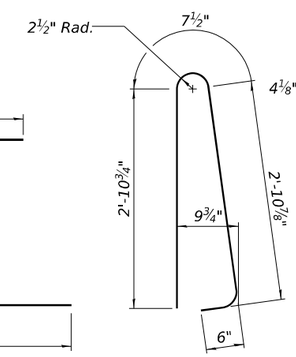

BAR d101(E)

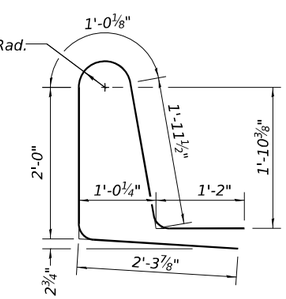

BAR d100(E)

MODEL: Sheet View
FILE NAME: pw://hq-pwint01.a-e.transyscorp.com:transyscorp-pw1/Documents/Projects_2020/CH401/401200165/Bridge/304.02 - Sheet Files/0600202-D876N65-042-SUPERSTRUCTURE DETAILS 1

TRANSYSTEMS

USER NAME = mbmcwhorter	DESIGNED - RMJ	REVISED -	
	CHECKED - IIP	REVISED -	
PLOT SCALE =	DRAWN - RMJ	REVISED -	
PLOT DATE = 11/13/2025	CHECKED - IIP	REVISED -	

STATE OF ILLINOIS
DEPARTMENT OF TRANSPORTATION

SUPERSTRUCTURE DETAILS 1
STRUCTURE NO. 060-0202

SHEET S-40 OF S-80 SHEETS

F.A.P. RTE.	SECTION	COUNTY	TOTAL SHEETS	SHEET NO.
0002	(103,104)BR-1	MADISON	178	119
		CONTRACT NO. 76N65		
	ILLINOIS	FED. AID PROJECT		

Notes:

The 3/16" minimum aluminum sheet shall be ASTM B 209 alloy 3003-H14 and coated with 5 mils of either bitumen paint or epoxy paint to minimize reaction with wet concrete. Cost included with Concrete Superstructure.

The Polyurethane Sealant shall be according to Article 1050.04 of the Std. Spec. and the color shall be gray.

Bar terminators, paid for separately. See Total Bill of Material.

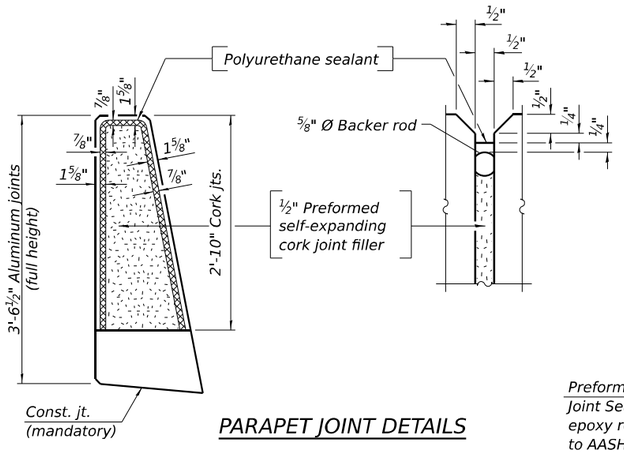

PARAPET JOINT DETAILS

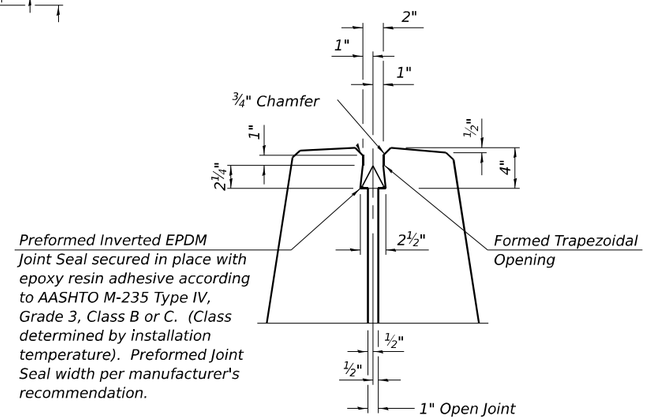

DETAIL A

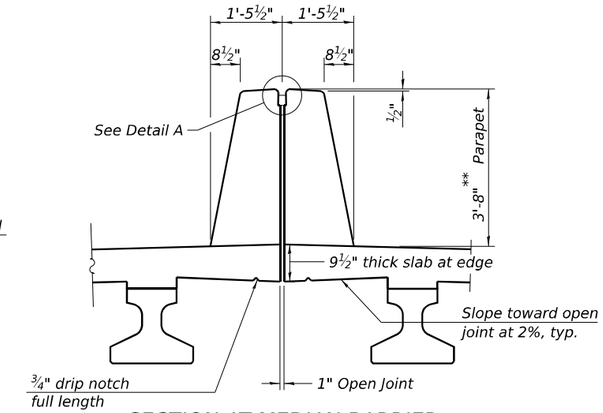

SECTION AT MEDIAN BARRIER

For reinforcement see section thru exterior parapet

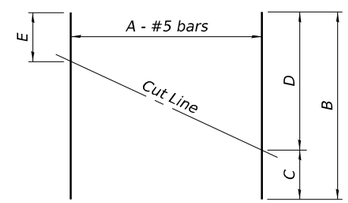

FIELD CUTTING DIAGRAM

Order bars full length and cut as shown.

Bar	A	B	C	D	E
a205(E)	9	39'-3"	20'-5"	18'-10"	5'-11"
a206(E)	6	22'-5"	12'-0"	10'-5"	2'-4"
a209(E)	13	33'-8"	17'-4"	16'-4"	3'-5"
a213(E)	9	27'-9"	14'-5"	13'-4"	4'-9"
b201(E)	24	37'-1"	18'-8"	18'-5"	7'-8"
b203(E)	24	27'-0"	13'-11"	13'-1"	3'-10"

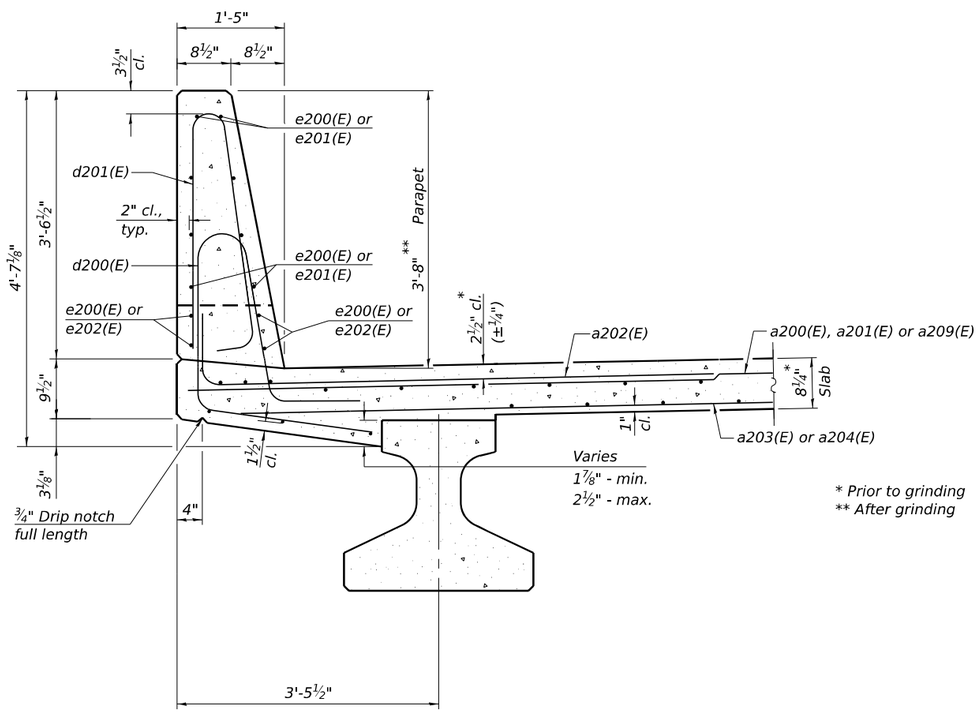

SECTION THRU EXTERIOR PARAPET

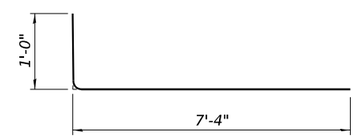

BAR a202(E)

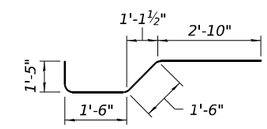

BAR x200(E)

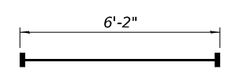

BAR a211(E)

(Headed. 36-#5 Bar terminators)

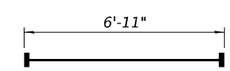

BAR a212(E)

(Headed. 36-#5 Bar terminators)

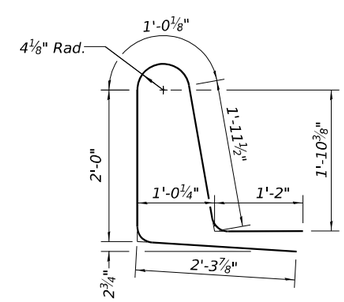

BAR d200(E)

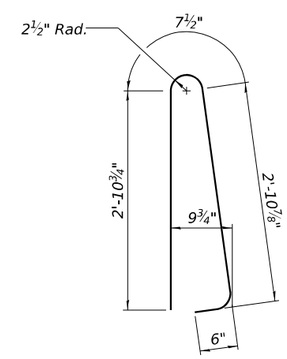

BAR d201(E)

SUPERSTRUCTURE SPAN 6
NORTHBOUND BRIDGE
BILL OF MATERIAL

Bar	No.	Size	Length	Shape
a200(E)	53	#5	30'-1"	
a201(E)	35	#5	23'-6"	
a202(E)	102	#6	8'-4"	
a203(E)	40	#5	19'-3"	
a204(E)	22	#5	34'-4"	
a205(E)	9	#5	39'-3"	
a206(E)	6	#5	22'-5"	
a207(E)	1	#5	37'-6"	
a208(E)	1	#5	21'-4"	
a209(E)	17	#5	33'-8"	
a210(E)	4	#5	25'-2"	
a211(E)	18	#5	6'-2"	
a212(E)	18	#5	6'-11"	
a213(E)	9	#5	27'-9"	
b200(E)	51	#5	13'-11"	
b201(E)	27	#5	37'-1"	
b202(E)	57	#5	19'-0"	
b203(E)	27	#5	27'-0"	
d200(E)	90	#5	8'-6"	
d201(E)	90	#5	7'-0"	
e200(E)	12	#4	17'-8"	
e201(E)	24	#4	13'-0"	
e202(E)	8	#4	21'-5"	
x200(E)	84	#5	7'-3"	
Reinforcement Bars, Epoxy Coated			Lbs.	13,390
Concrete Superstructure			Cu. Yds.	55.3

MODEL: Sheet View
FILE NAME: pw://hq-pwint01.a-e.transyscorp.com:transyscorp-pw1/Documents/Projects_2020/CH401/401200165/Bridge/304.02 - Sheet Files/06000202-D876N65-043-SUPERSTRUCTURE DETAILS 2

TRANSYSTEMS

USER NAME = mbmcwhorter	DESIGNED - RMJ	REVISED -	
	CHECKED - IIP	REVISED -	
PLOT SCALE =	DRAWN - RMJ	REVISED -	
PLOT DATE = 11/13/2025	CHECKED - IIP	REVISED -	

STATE OF ILLINOIS
DEPARTMENT OF TRANSPORTATION

SUPERSTRUCTURE DETAILS 2
STRUCTURE NO. 060-0202

SHEET S-41 OF S-80 SHEETS

F.A.P. RTE.	SECTION	COUNTY	TOTAL SHEETS	SHEET NO.
0002	(103,104)BR-1	MADISON	178	120
		CONTRACT NO. 76N65		
		ILLINOIS	FED. AID PROJECT	

Notes:

The 3/16" minimum aluminum sheet shall be ASTM B 209 alloy 3003-H14 and coated with 5 mils of either bitumen paint or epoxy paint to minimize reaction with wet concrete. Cost included with Concrete Superstructure.

The Polyurethane Sealant shall be according to Article 1050.04 of the Std. Spec. and the color shall be gray.

Bar terminators, paid for separately. See Total Bill of Material.

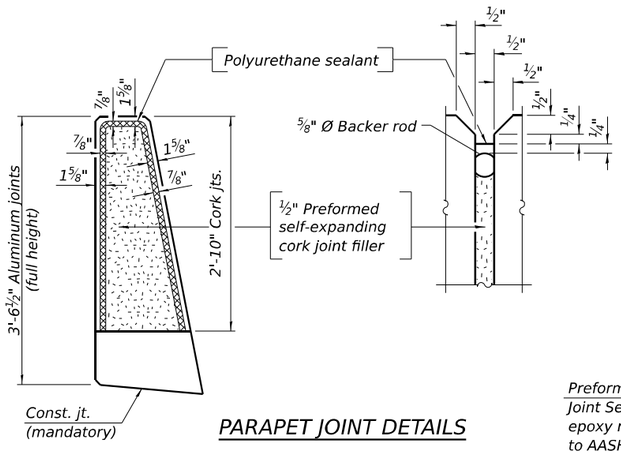

PARAPET JOINT DETAILS

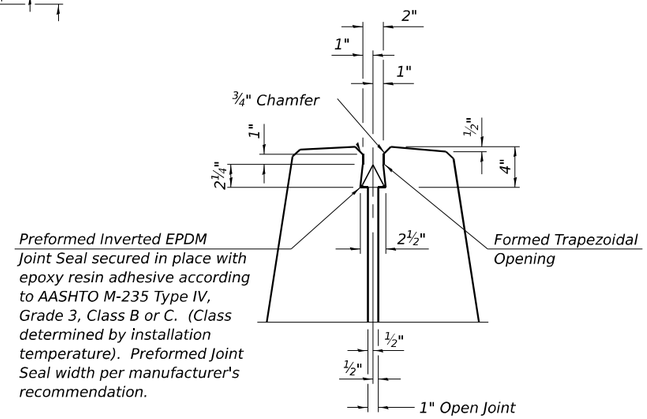

DETAIL A

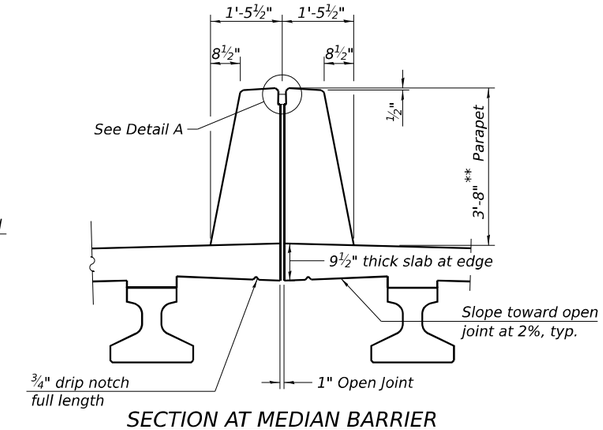

SECTION AT MEDIAN BARRIER

For reinforcement see section thru exterior parapet

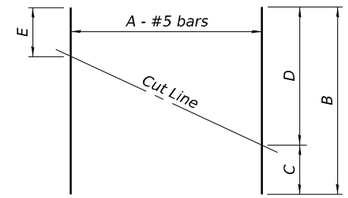

FIELD CUTTING DIAGRAM

Order bars full length and cut as shown.

Bar	A	B	C	D	E
a305(E)	9	40'-6"	21'-0"	19'-6"	6'-7"
a306(E)	6	23'-8"	12'-8"	11'-0"	3'-0"
a313(E)	9	28'-0"	14'-6"	13'-6"	4'-11"
a314(E)	13	33'-11"	17'-6"	16'-5"	3'-7"
b301(E)	24	42'-3"	21'-4"	20'-11"	10'-3"
b303(E)	24	28'-2"	14'-6"	13'-8"	4'-5"

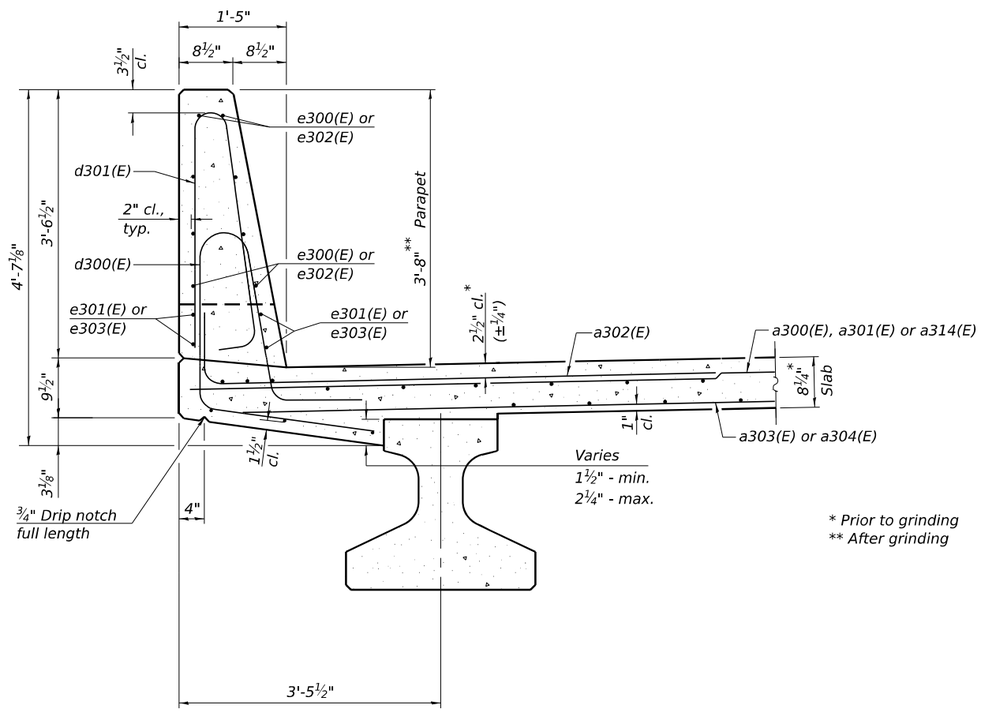

* Prior to grinding
** After grinding

SECTION THRU EXTERIOR PARAPET

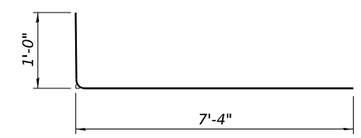

BAR a302(E)

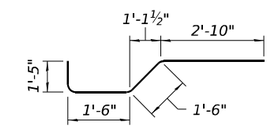

BAR x300(E)

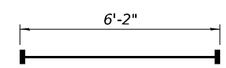

BAR a311(E)

(Headed. 36-#5 Bar terminators)

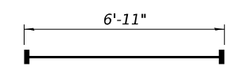

BAR a312(E)

(Headed. 36-#5 Bar terminators)

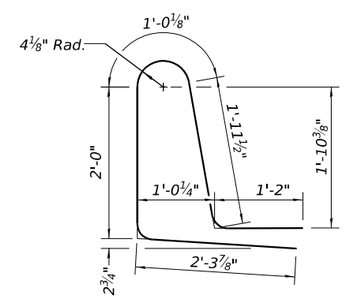

BAR d300(E)

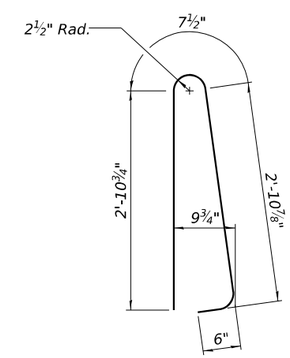

BAR d301(E)

SUPERSTRUCTURE - SPAN 6
SOUTHBOUND BRIDGE
BILL OF MATERIAL

Bar	No.	Size	Length	Shape
a300(E)	100	#5	30'-1"	
a301(E)	82	#5	23'-6"	
a302(E)	196	#6	8'-4"	
a303(E)	71	#5	19'-3"	
a304(E)	53	#5	34'-4"	
a305(E)	9	#5	40'-6"	
a306(E)	6	#5	23'-8"	
a307(E)	1	#5	37'-6"	
a308(E)	1	#5	21'-4"	
a309(E)	4	#5	33'-8"	
a310(E)	4	#5	25'-2"	
a311(E)	18	#5	6'-2"	
a312(E)	18	#5	6'-11"	
a313(E)	9	#5	28'-0"	
a314(E)	13	#5	33'-11"	
b300(E)	51	#5	34'-11"	
b301(E)	27	#5	42'-3"	
b302(E)	57	#5	41'-11"	
b303(E)	27	#5	28'-2"	
d300(E)	161	#5	8'-6"	
d301(E)	161	#5	7'-0"	
e300(E)	24	#4	13'-6"	
e301(E)	8	#4	22'-1"	
e302(E)	32	#4	15'-7"	
e303(E)	12	#4	23'-0"	
x300(E)	84	#5	7'-3"	
Reinforcement Bars, Epoxy Coated			Lbs.	23,140
Concrete Superstructure			Cu. Yds.	93.9

MODEL: Sheet View
FILE NAME: pw://hq-pwint01.a-e.transyscorp.com:transyscorp-pw1/Documents/Projects_2020/CH401/401200165/Bridge/304.02 - Sheet Files/0600202-D876N65-044-SUPERSTRUCTURE DETAILS 3

TRANSYSTEMS

USER NAME = mbmcwhorter	DESIGNED - RMJ	REVISED -	
	CHECKED - IIP	REVISED -	
PLOT SCALE =	DRAWN - RMJ	REVISED -	
PLOT DATE = 11/13/2025	CHECKED - IIP	REVISED -	

STATE OF ILLINOIS
DEPARTMENT OF TRANSPORTATION

SUPERSTRUCTURE DETAILS 3
STRUCTURE NO. 060-0202

SHEET S-42 OF S-80 SHEETS

F.A.P. RTE.	SECTION	COUNTY	TOTAL SHEETS	SHEET NO.
0002	(103,104)BR-1	MADISON	178	121
		CONTRACT NO. 76N65		
	ILLINOIS	FED. AID PROJECT		

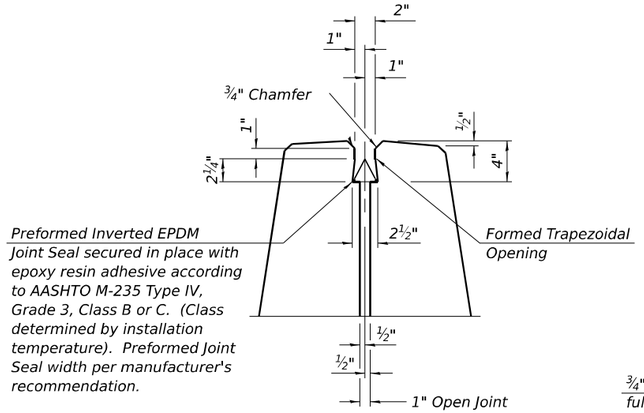

DETAIL A

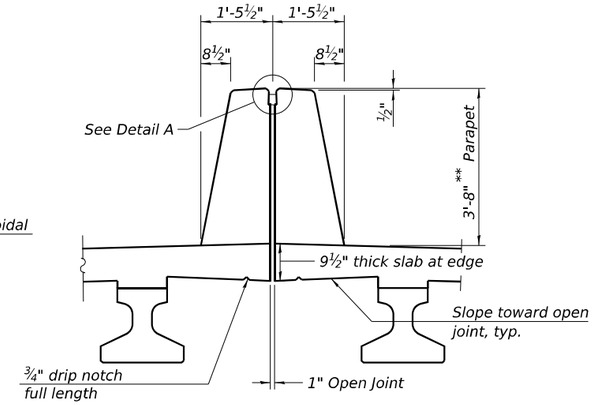

SECTION AT MEDIAN BARRIER

For reinforcement see section thru exterior parapet

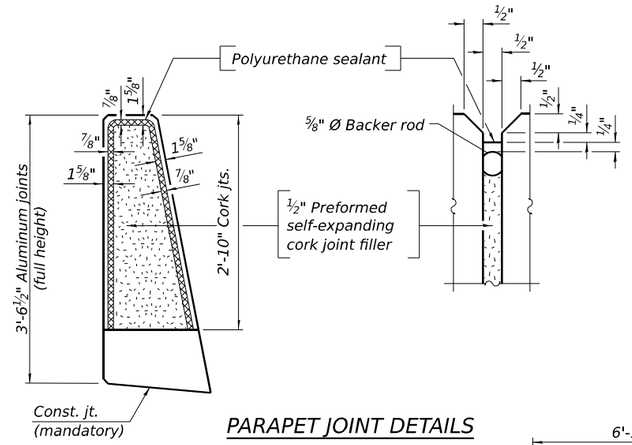

PARAPET JOINT DETAILS

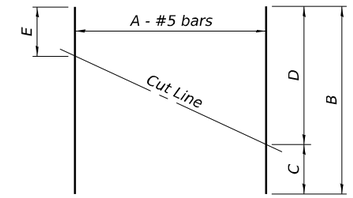

FIELD CUTTING DIAGRAM

Order bars full length and cut as shown.

Bar	A	B	C	D	E
a404(E)	21	28'-3"	3'-5"	24'-10"	3'-5"
a405(E)	20	37'-4"	3'-5"	33'-11"	3'-5"
a406(E)	23	35'-7"	6'-0"	29'-7"	6'-0"
a407(E)	9	22'-6"	4'-10"	17'-8"	4'-10"

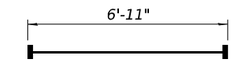

BAR a413(E)

(Headed. 36-#5 Bar terminators)

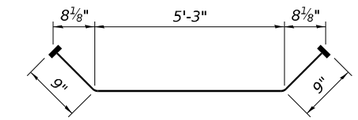

BARS m401(E) and m433(E)

(Headed. 96-#6 Bar terminators)

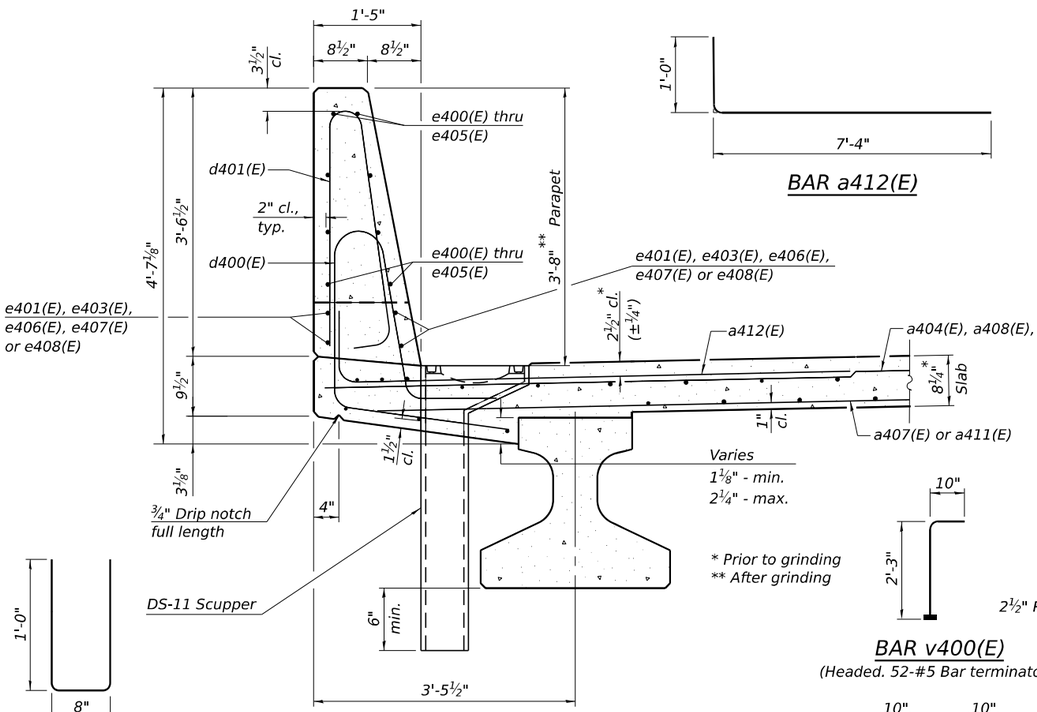

SECTION THRU EXTERIOR PARAPET

BAR a412(E)

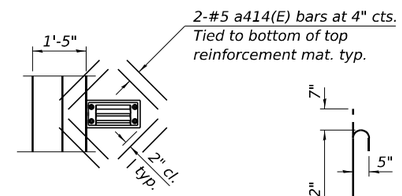

DS-11 SCUPPER PLAN

Note:
Cut longitudinal reinforcement to clear drainage scuppers.

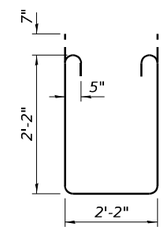

BAR s401(E)

SUPERSTRUCTURE - SPANS 7-11
BILL OF MATERIAL

Bill of Material for northbound bridge shown
Bill of Material for southbound bridge similar

Bar	No.	Size	Length	Shape
a400(E)	5	#5	33'-8"	
a401(E)	5	#5	25'-2"	
a402(E)	2	#5	37'-6"	
a403(E)	2	#5	21'-4"	
a404(E)	21	#5	28'-3"	
a405(E)	20	#5	37'-4"	
a406(E)	23	#5	35'-7"	
a407(E)	9	#5	22'-6"	
a408(E)	583	#5	23'-6"	
a409(E)	537	#5	30'-1"	
a410(E)	359	#5	19'-3"	
a411(E)	377	#5	34'-4"	
a412(E)	1154	#6	8'-4"	
a413(E)	18	#5	6'-11"	
a414(E)	8	#5	1'-6"	
b400(E)	432	#6	35'-0"	
b401(E)	54	#6	40'-3"	
b402(E)	432	#5	35'-0"	
b403(E)	54	#5	40'-3"	
b404(E)	53	#9	46'-11"	
b405(E)	53	#7	41'-6"	
b406(E)	53	#8	43'-1"	
b407(E)	53	#9	47'-4"	
d400(E)	878	#5	8'-6"	
d401(E)	878	#5	7'-0"	
e400(E)	96	#4	16'-10"	
e401(E)	144	#4	6'-11"	
e402(E)	48	#4	14'-1"	
e403(E)	48	#4	6'-8"	
e404(E)	48	#4	13'-6"	
e405(E)	48	#4	14'-7"	
e406(E)	48	#4	19'-2"	
e407(E)	48	#4	16'-7"	
e408(E)	16	#4	22'-0"	

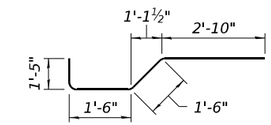

BAR x400(E)

Bar	No.	Size	Length	Shape
m400(E)	10	#6	30'-2"	
m401(E)	12	#6	6'-9"	
m402(E)	12	#6	6'-9"	
m403(E)	4	#6	2'-11"	
m404(E)	4	#4	28'-9"	
m405(E)	14	#5	4'-0"	
m420(E)	12	#6	4'-10"	
m421(E)	24	#6	6'-9"	
m422(E)	14	#5	4'-0"	
m430(E)	36	#6	4'-10"	
m431(E)	36	#6	6'-9"	
m432(E)	42	#5	4'-0"	
m433(E)	36	#6	6'-9"	
s400(E)	42	#5	6'-10"	
s401(E)	42	#5	7'-8"	
s402(E)	28	#5	7'-4"	
s420(E)	36	#5	11'-3"	
s421(E)	24	#5	9'-3"	
s430(E)	108	#5	10'-9"	
s431(E)	72	#5	9'-1"	
u400(E)	42	#4	2'-8"	
v400(E)	51	#5	3'-1"	
x400(E)	42	#5	7'-3"	
Reinforcement Bars, Epoxy Coated			Lbs.	165,740
Concrete Superstructure			Cu. Yds.	556.3

BAR u400(E)

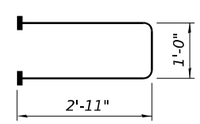

BAR s400(E)

(Headed. 84-#5 Bar terminators)

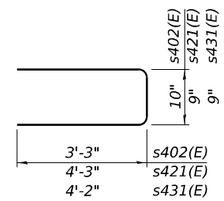

BARS s402(E), s421(E) & s431(E)

BAR v400(E)

(Headed. 52-#5 Bar terminators)

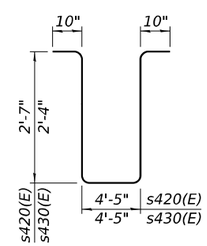

BARS s420(E) & s430(E)

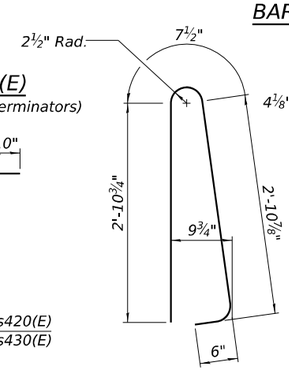

BAR d401(E)

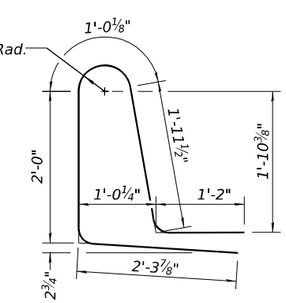

BAR d400(E)

Notes:

The 3/16" minimum aluminum sheet shall be ASTM B 209 alloy 3003-H14 and coated with 5 mils of either bitumen paint or epoxy paint to minimize reaction with wet concrete. Cost included with Concrete Superstructure.

The Polyurethane Sealant shall be according to Article 1050.04 of the Std. Spec. and the color shall be gray.

Bar terminators, paid for separately. See Total Bill of Material.

MODEL: Sheet View
FILE NAME: pw://hq-pwint01.a-e.transyscorp.com:transyscorp-pw1/Documents/Projects_2020/CH401/401200165/Bridge/304.02 - Sheet Files/0600202-D876N65-045-SUPERSTRUCTURE DETAILS 4

TRANSYSTEMS

USER NAME = mbmcwhorter	DESIGNED - RMJ	REVISED -	
	CHECKED - IIP	REVISED -	
PLOT SCALE =	DRAWN - RMJ	REVISED -	
PLOT DATE = 11/13/2025	CHECKED - IIP	REVISED -	

STATE OF ILLINOIS
DEPARTMENT OF TRANSPORTATION

SUPERSTRUCTURE DETAILS 4
STRUCTURE NO. 060-0202

SHEET S-43 OF S-80 SHEETS

F.A.P. RTE.	SECTION	COUNTY	TOTAL SHEETS	SHEET NO.
0002	(103,104)BR-1	MADISON	178	122

CONTRACT NO. 76N65

ILLINOIS FED. AID PROJECT

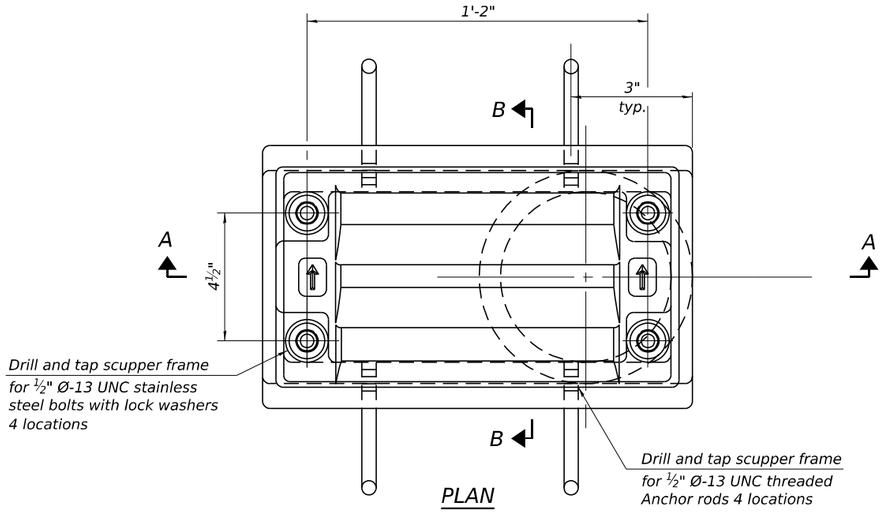

PLAN

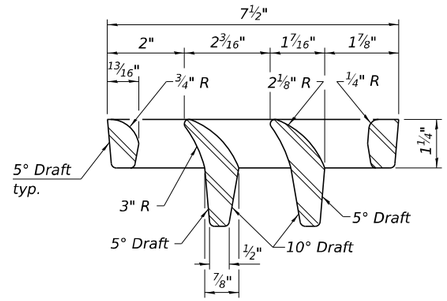

VANE GRATE DETAIL

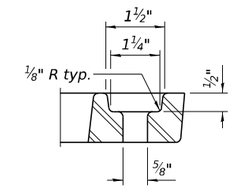

GRATE BOLT HOLE DETAIL

Notes:

All cast iron parts shall be gray iron conforming to the requirements of AASHTO M105, Class 35B and AASHTO M306.

Bolts, anchor rods, nuts and washers shall be according to ASTM A307 and shall be galvanized according to AASHTO M232. As an alternate stainless steel may be used.

Stainless steel hardware shall be according to Article 1006.29(d) of the Standard Specifications.

Structural steel weldments of equal sections and of the same configuration may be substituted for the cast iron scupper frames and downspouts; however, the scupper grates shall remain cast iron. Fillet or full penetration welds shall be used for the weldments. Details shall be submitted to the Engineer for approval.

Structural steel scupper frames and downspouts, when utilized, shall be galvanized according to AASHTO M111.

As an alternate, fiberglass may be used for downspouts according to ASTM D2996 with a short-time rupture strength hoop tensile stress of 30,000 psi min. in lieu of the cast iron or structural steel.

Exterior surfaces of downspouts and exterior exposed surfaces of the scupper frame below deck shall be treated as specified on sheet S-40 of S-80.

The Contractor shall take appropriate measures to assure that Protective Coat is not applied to the scupper.

Cost of the grate, frame, downspout, anchor rods, nuts and washers including complete installation of the scupper shall be paid for at the contract unit price for Drainage Scuppers, DS-11.

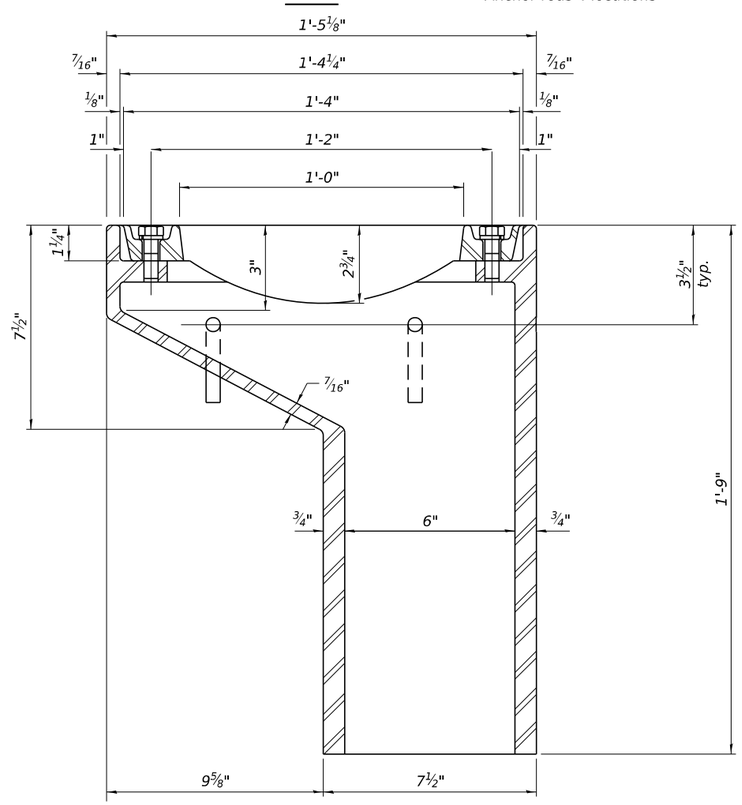

SECTION A-A

See sheet S-40 of S-80 for scupper location relative to parapet.

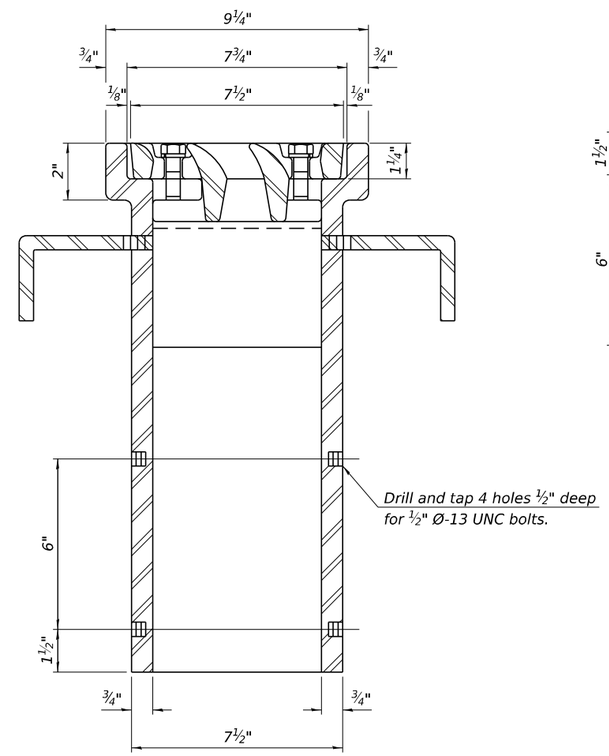

SECTION B-B

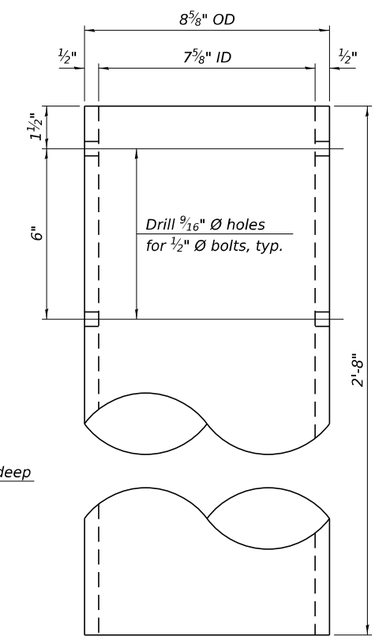

DOWNSPOUT

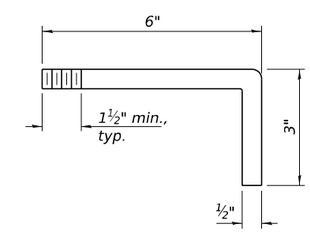

ANCHOR ROD DETAIL

BILL OF MATERIAL

Item	Unit	Quantity
Drainage Scuppers, DS-11	Each	4

DS-11

4-4-2025

TRANSYSTEMS

USER NAME = mbmcwhorter	DESIGNED - RMJ	REVISED -	
	CHECKED - IIP	REVISED -	
PLOT SCALE =	DRAWN - RMJ	REVISED -	
PLOT DATE = 11/13/2025	CHECKED - IIP	REVISED -	

STATE OF ILLINOIS
DEPARTMENT OF TRANSPORTATION

DRAINAGE SCUPPERS, DS-11
STRUCTURE NO. 060-0202

SHEET S-44 OF S-80 SHEETS

F.A.P. RTE.	SECTION	COUNTY	TOTAL SHEETS	SHEET NO.
0002	(103,104)BR-1	MADISON	178	123

CONTRACT NO. 76N65

ILLINOIS FED. AID PROJECT

MODEL: Sheet View
FILE NAME: pw://hq-pwinfo01.a-e.transyscorp.com:transyscorp-pw1/Documents/Projects_2020/CH401/401200165/Bridge/304.02 - Sheet Files/0600202-D876N65-046-DRAINAGE SCUPPER DETAILS

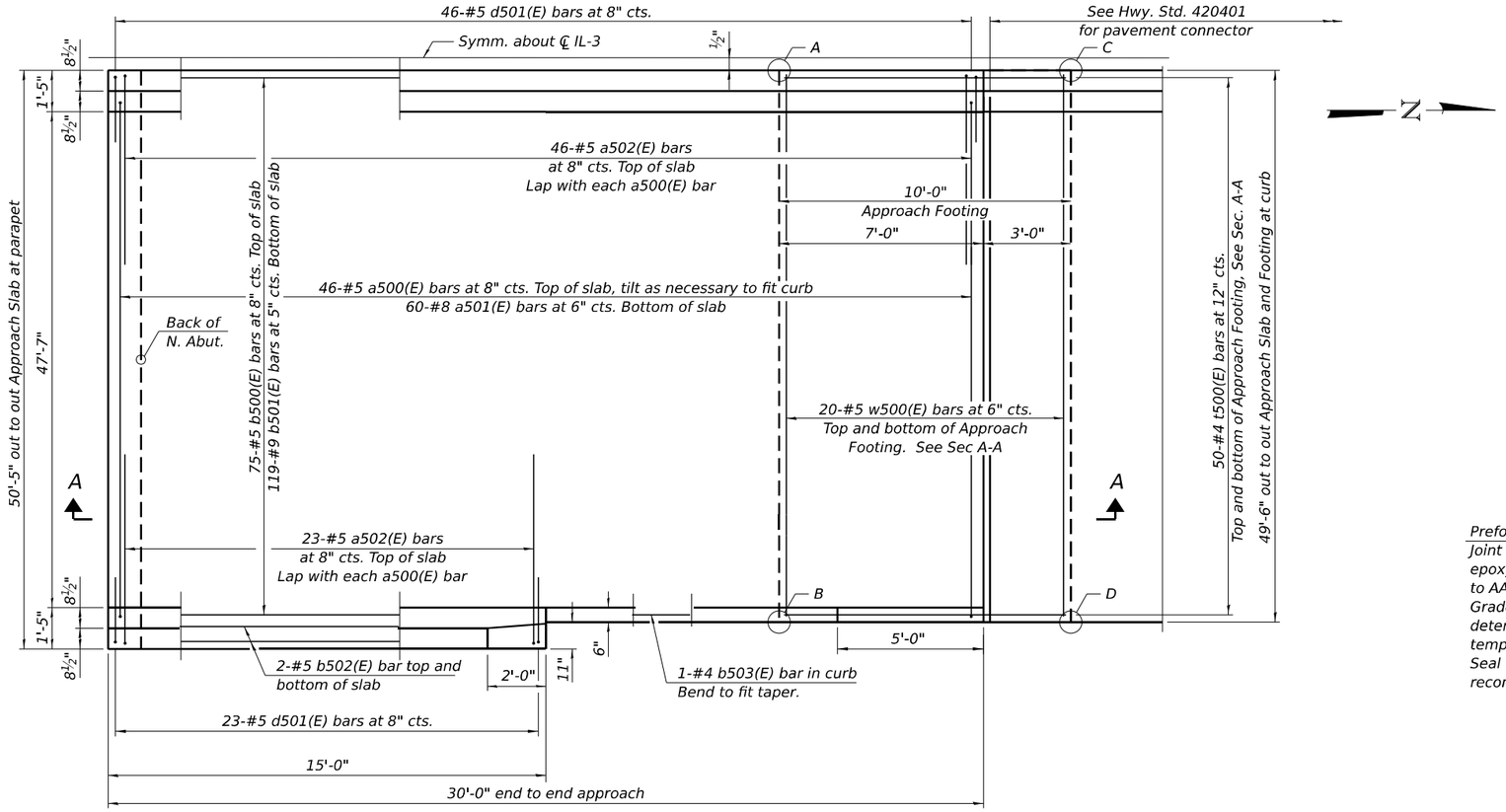

PLAN

(Northbound approach slab shown; Southbound approach slab mirror image)

TOP AND BOTTOM ELEVATIONS FOR APPROACH FOOTING

NORTHBOUND APPROACH SLAB			SOUTHBOUND APPROACH SLAB		
Point/ Location	Top	Bottom	Point/ Location	Top	Bottom
A	435.94	435.11	A	435.94	435.11
B	434.95	434.12	B	434.95	434.12
C	435.68	434.84	C	435.68	434.84
D	434.69	433.85	D	434.69	433.85

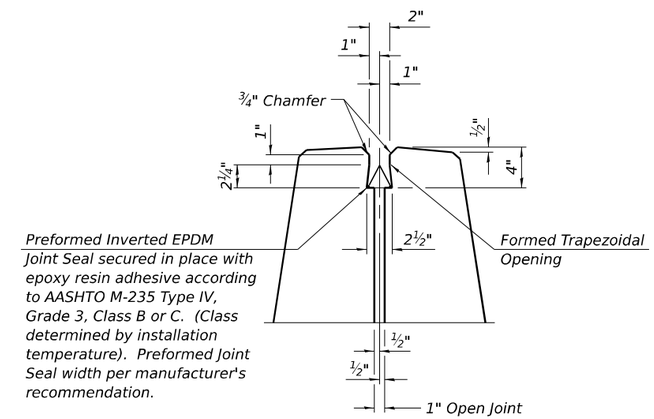

DETAIL A

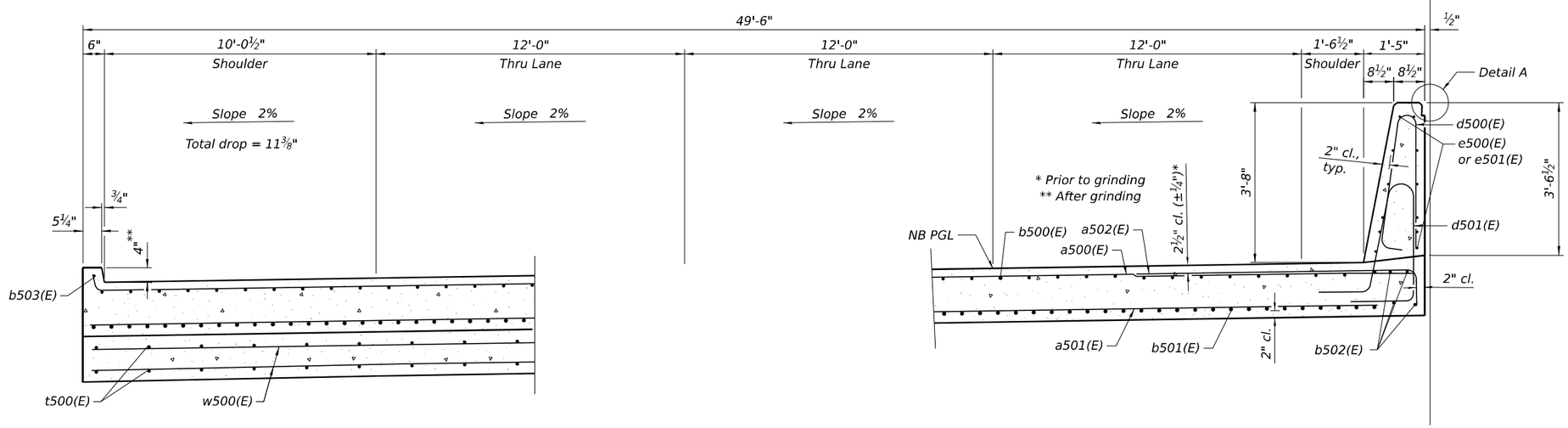

CROSS SECTION

(Looking South on Northbound Approach Slab)

AT APPROACH FOOTING

NEAR ABUTMENT

MODEL: Default
FILE NAME: pw://hq-pwint01.a-e.transyscorp.com:transyscorp-pw1/Documents/Projects_2020/CH401/401200165/Bridge/304.04 - EFK/Sheet Files/06000202-D876N65-047-BRIDGE APPROACH SLAB DETAILS 1

EFK•Moen
Civil Engineering Design

USER NAME = mbmcwhorter	DESIGNED - KRH	REVISED -	
	CHECKED - ACB	REVISED -	
PLOT SCALE =	DRAWN - KRH	REVISED -	
PLOT DATE = 11/13/2025	CHECKED - ACB	REVISED -	

STATE OF ILLINOIS
DEPARTMENT OF TRANSPORTATION

NORTH BRIDGE APPROACH SLAB DETAILS 1
STRUCTURE NO. 060-0202

SHEET S-45 OF S-80 SHEETS

F.A.P. RTE.	SECTION	COUNTY	TOTAL SHEETS	SHEET NO.
0002	(103,104)BR-1	MADISON	178	124
		CONTRACT NO. 76N65		
	ILLINOIS	FED. AID PROJECT		

Notes:
The joint opening shall be adjusted for temperature per Article 520.04 of the Standard Specifications. However, since this detail is for jointless structures, the length of bridge used to calculate the adjustment shall be equal to half the total bridge length plus the length of the bridge approach slab.
Parapet concrete shall be paid for as Concrete Superstructure.
Approach slab shall be paid for as Concrete Superstructure (Approach Slab).
Approach footing concrete shall be paid for as Concrete Structures.
The approach footing maximum applied service bearing pressure (Qmax) = 2.0 ksf.
Cost of excavation for approach footing included with Concrete Structures.
For Granular Backfill for Structures and drainage treatment details, see sheet S-03 of S-80.

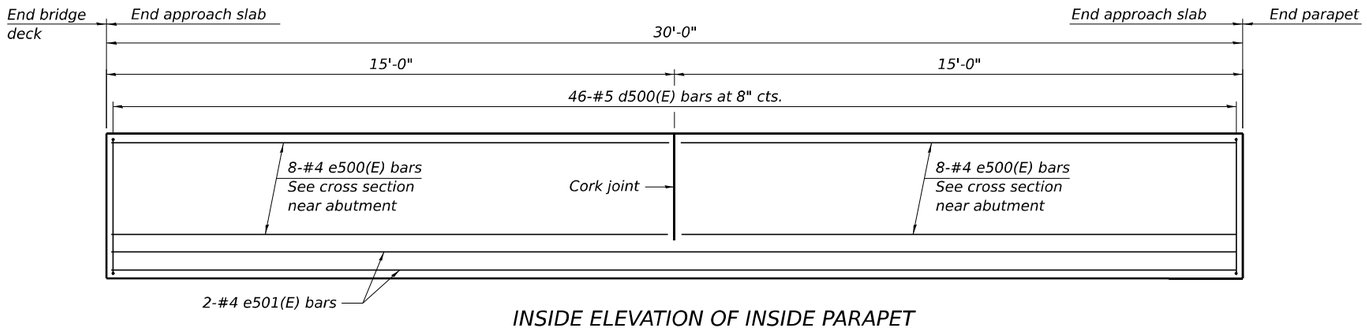

INSIDE ELEVATION OF INSIDE PARAPET

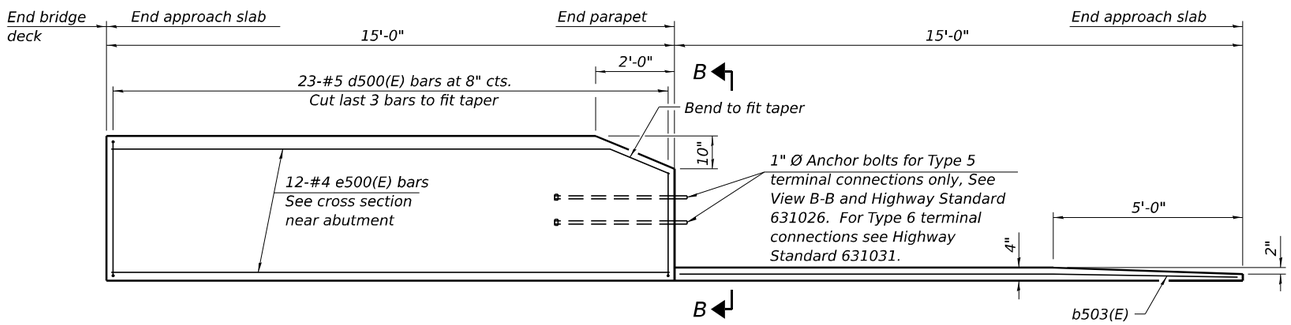

INSIDE ELEVATION OF OUTSIDE PARAPET AND CURB

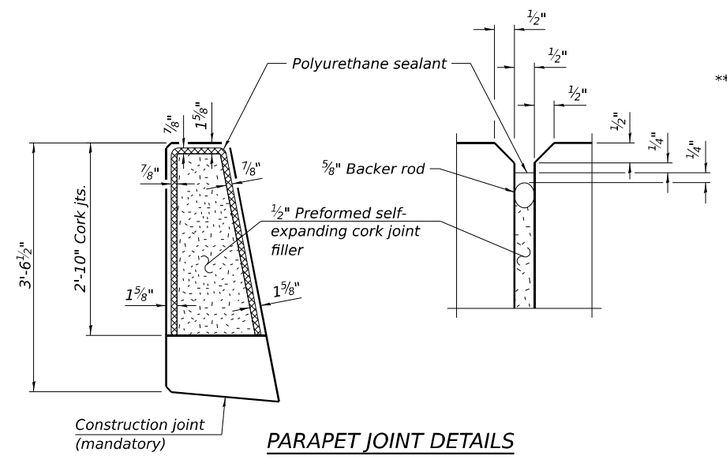

PARAPET JOINT DETAILS

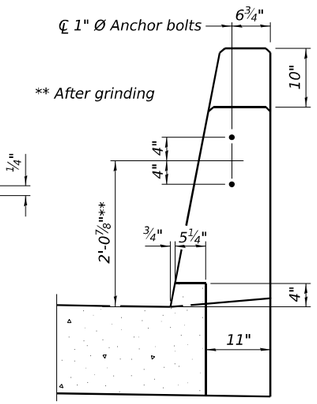

VIEW B-B

Note:
The polyurethane sealant shall be according to Article 1050.04 of the Standard Specifications and the color shall be gray.

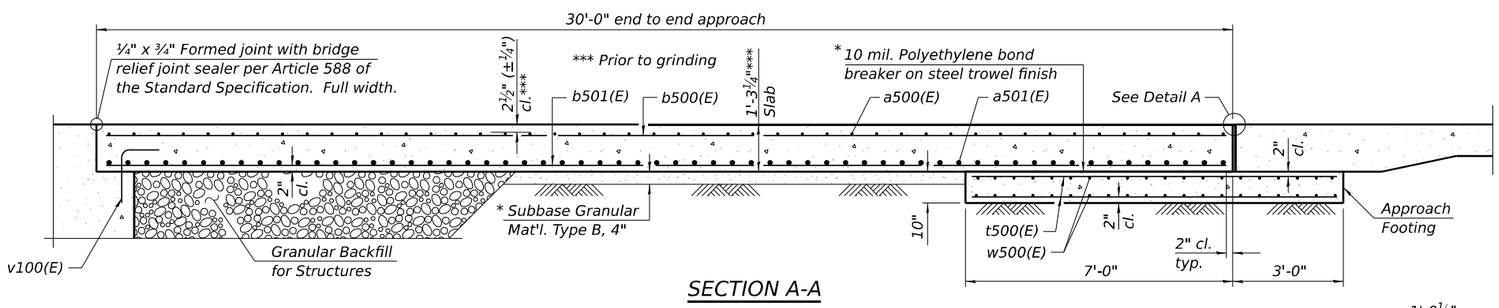

SECTION A-A

NORTH APPROACH
BILL OF MATERIAL

Bill of Material for northbound and southbound approaches shown.

Bar	No.	Size	Length	Shape
a500(E)	92	#5	49'-7"	
a501(E)	120	#8	49'-2"	
a502(E)	138	#5	7'-4"	
b500(E)	150	#5	29'-8"	
b501(E)	238	#9	29'-8"	
b502(E)	8	#5	14'-8"	
b503(E)	2	#4	14'-8"	
d500(E)	138	#5	7'-0"	
d501(E)	138	#5	8'-6"	
e500(E)	56	#4	14'-8"	
e501(E)	8	#4	29'-8"	
t500(E)	200	#4	9'-8"	
w500(E)	80	#5	49'-2"	
Concrete Superstructure			Cu. Yd.	12.7
Concrete Superstructure (Approach Slab)			Cu. Yd.	141.6
Concrete Structures			Cu. Yd.	30.6
Reinforcement Bars, Epoxy Coated			Pound	58,680

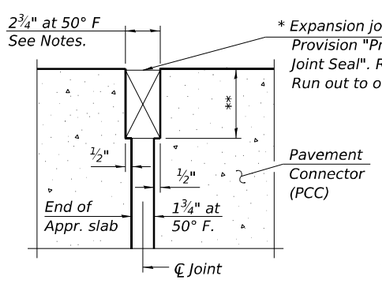

DETAIL A
(at Rt. ∠'s)

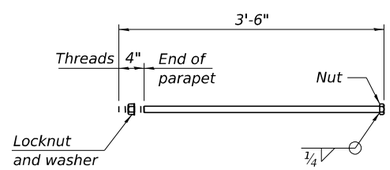

* 1" Ø ANCHOR BOLT
(Anchor bolt assemblies shall be galvanized according to Article 1006.09 of the Standard Specifications)

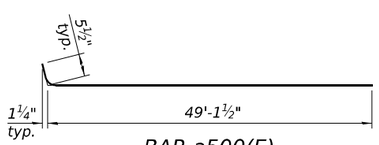

BAR a500(E)

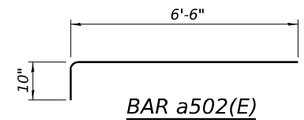

BAR a502(E)

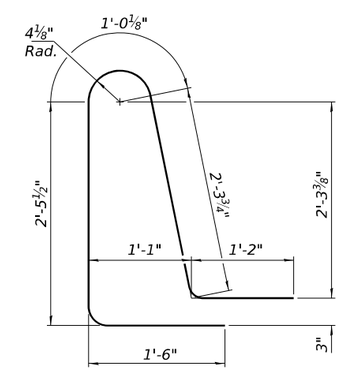

BAR d501(E)

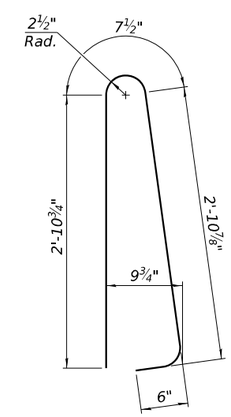

BAR d500(E)

* Cost included with Concrete Superstructure (Approach Slab).
** Per manufacturer recommendations

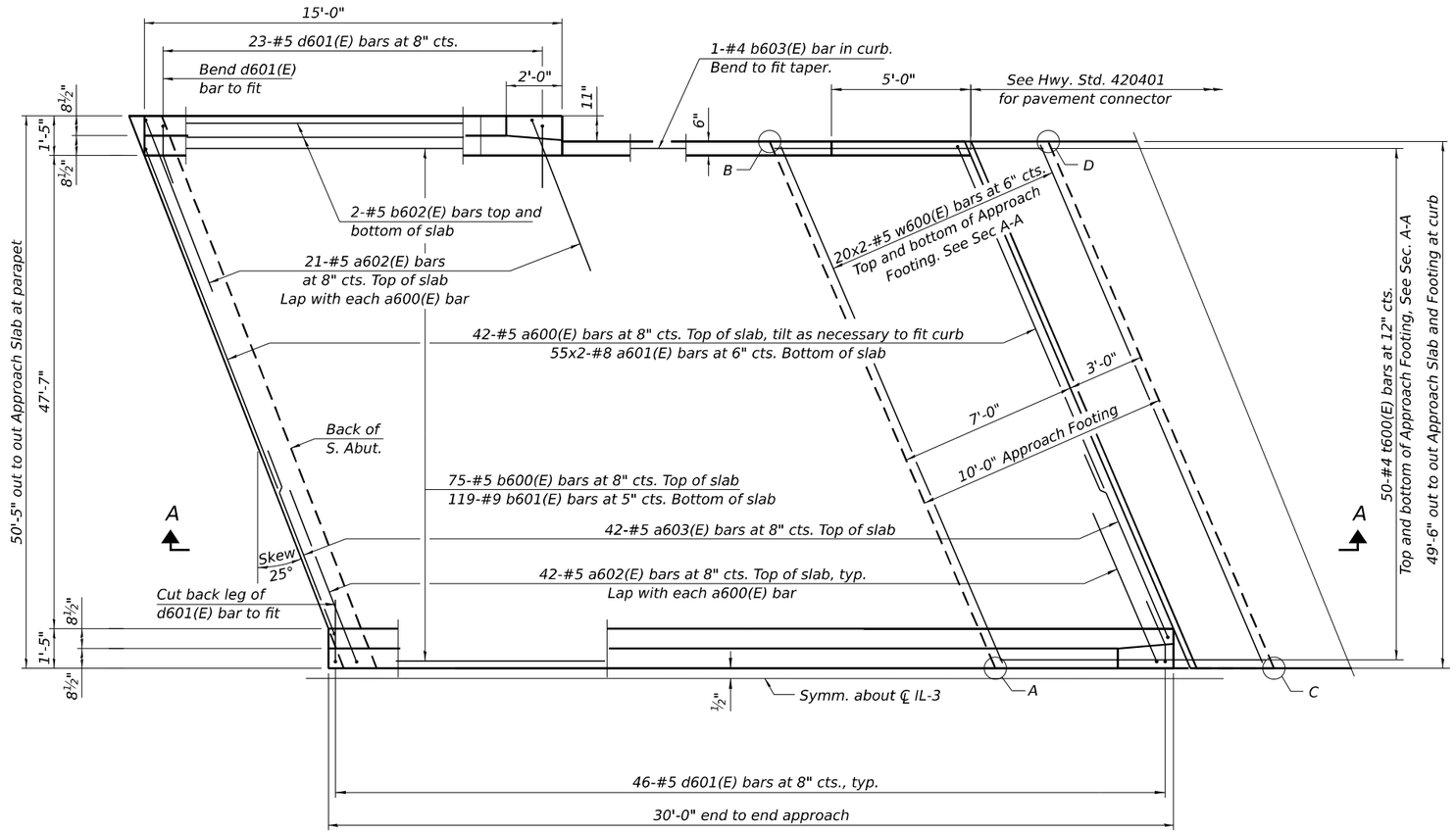

PLAN

(Northbound approach slab shown; Southbound approach slab similar)

TOP AND BOTTOM ELEVATIONS FOR APPROACH FOOTING

NORTHBOUND APPROACH SLAB			SOUTHBOUND APPROACH SLAB		
Point/ Location	Top	Bottom	Point/ Location	Top	Bottom
A	438.87	438.04	A	438.87	438.04
B	438.26	437.43	B	437.47	436.63
C	438.68	437.85	C	438.68	437.85
D	438.09	437.25	D	437.25	436.42

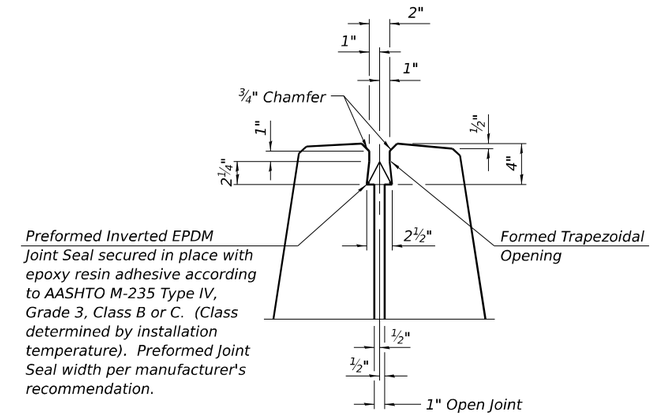

DETAIL A

MINIMUM BAR LAP

#5 bar = 3'-0"
#8 bar = 5'-4"

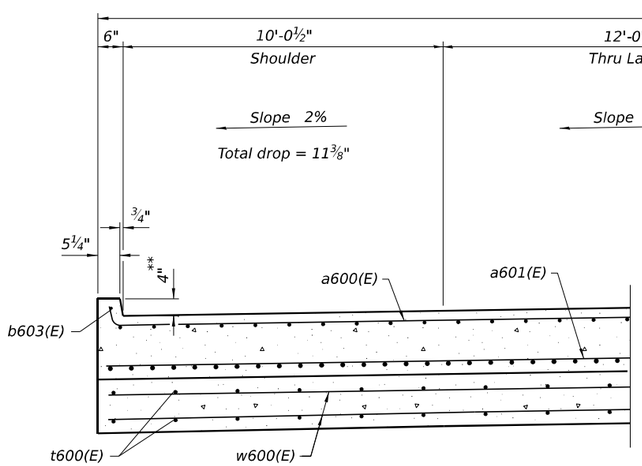

AT APPROACH FOOTING

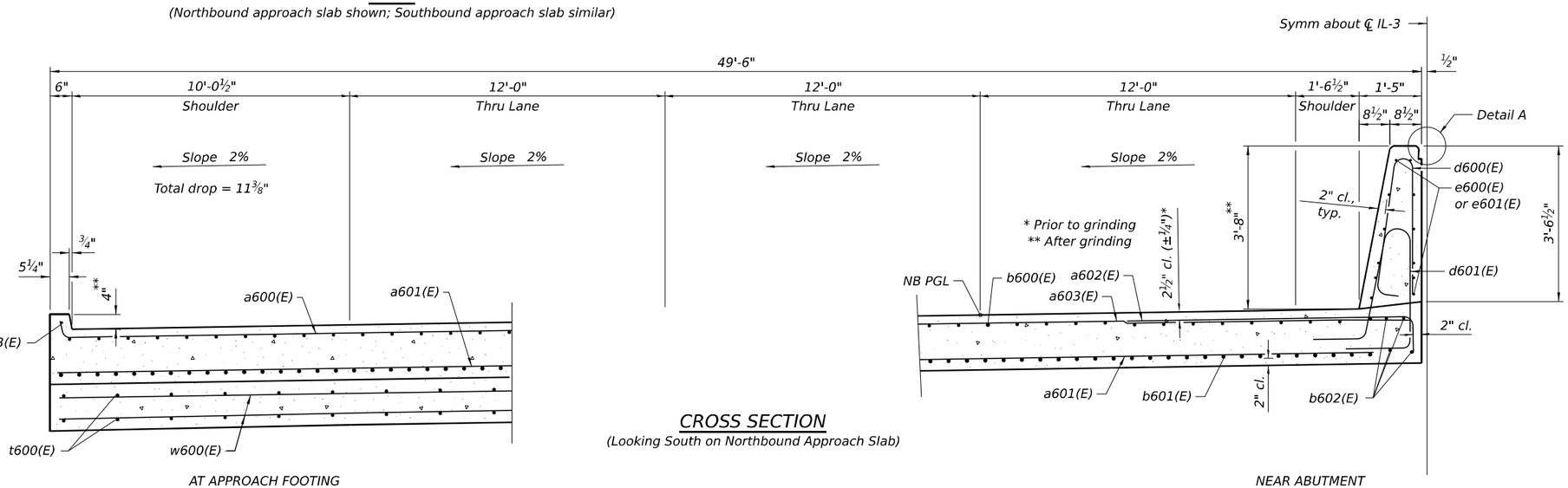

CROSS SECTION

(Looking South on Northbound Approach Slab)

NEAR ABUTMENT

MODEL: Default
FILE NAME: pw://hq-pwint01.a-e.transyscorp.com:transyscorp-pw1/Documents/Projects_2020/CH401/401200165/Bridge/304.04 - EFK/Sheet Files/06000202-0876N65-049-BRIDGE APPROACH SLAB DETAILS 3.dgn

EFK•Moen Civil Engineering Design

USER NAME = mbmcwhorter	DESIGNED - KRH	REVISED -	
	CHECKED - ACB	REVISED -	
PLOT SCALE =	DRAWN - KRH	REVISED -	
PLOT DATE = 11/13/2025	CHECKED - ACB	REVISED -	

STATE OF ILLINOIS
DEPARTMENT OF TRANSPORTATION

SOUTH BRIDGE APPROACH SLAB DETAILS 1
STRUCTURE NO. 060-0202

SHEET S-47 OF S-80 SHEETS

F.A.P. RTE.	SECTION	COUNTY	TOTAL SHEETS	SHEET NO.
0002	(103,104)BR-1	MADISON	178	126
		CONTRACT NO. 76N65		
	ILLINOIS	FED. AID PROJECT		

Notes:
The joint opening shall be adjusted for temperature per Article 520.04 of the Standard Specifications. However, since this detail is for jointless structures, the length of bridge used to calculate the adjustment shall be equal to half the total bridge length plus the length of the bridge approach slab.
Parapet concrete shall be paid for as Concrete Superstructure.
Approach slab shall be paid for as Concrete Superstructure (Approach Slab).
Approach footing concrete shall be paid for as Concrete Structures.
The approach footing maximum applied service bearing pressure (Qmax) = 2.0 ksf.
Cost of excavation for approach footing included with Concrete Structures.
For Granular Backfill for Structures and drainage treatment details, see sheet S-03 of S-80.

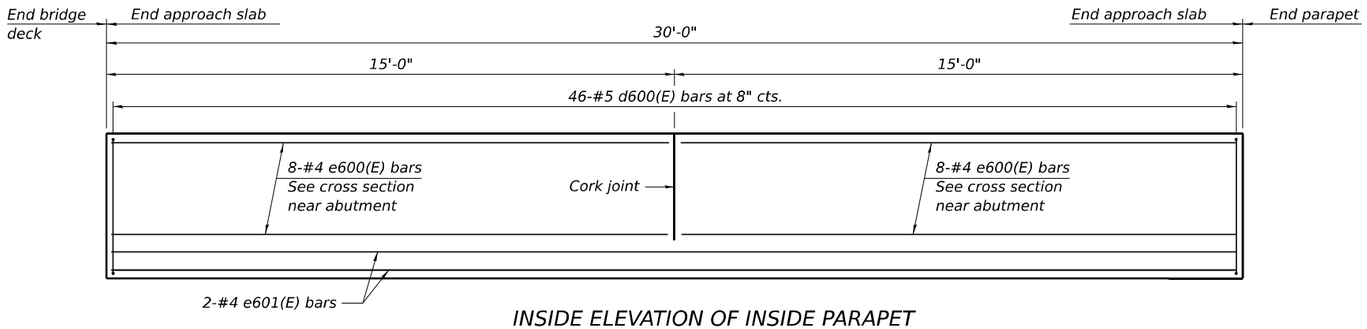

INSIDE ELEVATION OF INSIDE PARAPET

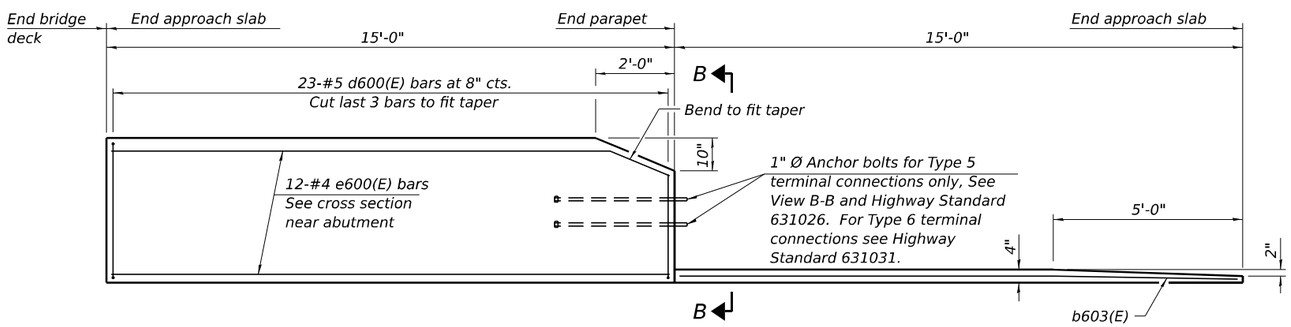

INSIDE ELEVATION OF OUTSIDE PARAPET AND CURB

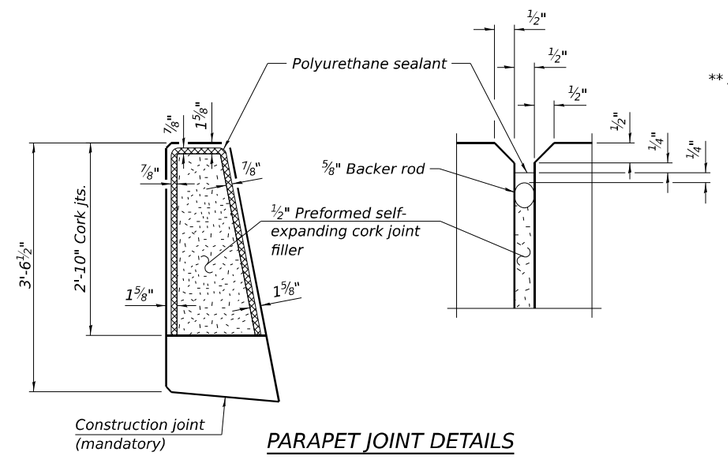

PARAPET JOINT DETAILS

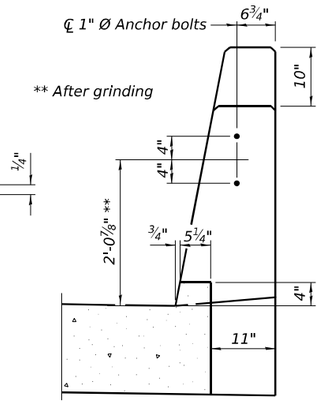

VIEW B-B

Note:
The polyurethane sealant shall be according to Article 1050.04 of the Standard Specifications and the color shall be gray.

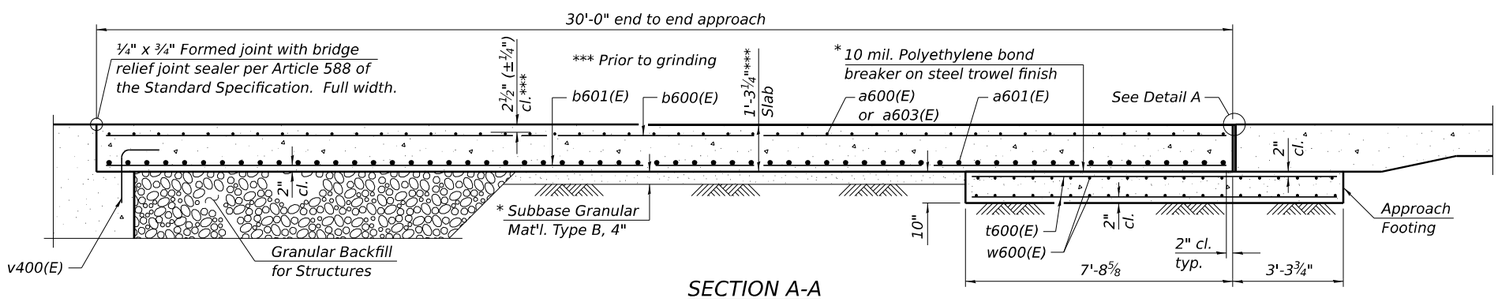

SECTION A-A

SOUTH APPROACH
BILL OF MATERIAL

Bill of Material for northbound and southbound approaches shown.

Bar	No.	Size	Length	Shape
a600(E)	84	#5	35'-6"	
a601(E)	220	#8	29'-9"	
a602(E)	126	#5	7'-4"	
a603(E)	84	#5	22'-1"	
b600(E)	150	#5	29'-8"	
b601(E)	238	#9	29'-8"	
b602(E)	8	#5	14'-8"	
b603(E)	2	#4	14'-8"	
d600(E)	138	#5	7'-0"	
d601(E)	138	#5	8'-6"	
e600(E)	56	#4	14'-8"	
e601(E)	8	#4	29'-8"	
t600(E)	200	#4	10'-8"	
w600(E)	160	#5	28'-7"	
Concrete Superstructure			Cu. Yd.	12.7
Concrete Superstructure (Approach Slab)			Cu. Yd.	141.6
Concrete Structures			Cu. Yd.	33.8
Reinforcement Bars, Epoxy Coated			Pound	61,410

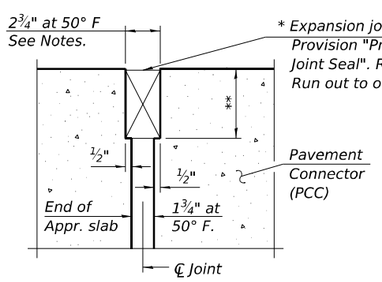

DETAIL A
(at Rt. ∠'s)

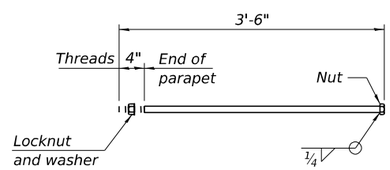

* 1" Ø ANCHOR BOLT
(Anchor bolt assemblies shall be galvanized according to Article 1006.09 of the Standard Specifications)

BAR a600(E)

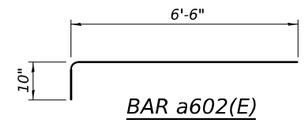

BAR a602(E)

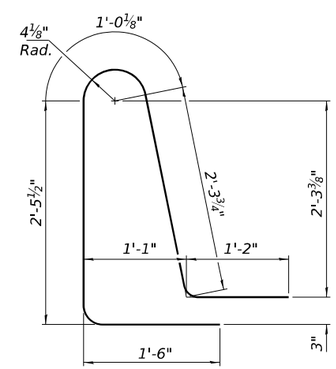

BAR d601(E)

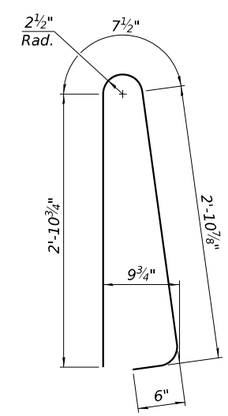

BAR d600(E)

* Cost included with Concrete Superstructure (Approach Slab).
** Per manufacturer recommendations

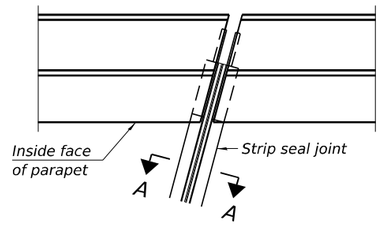

FOR SKEWS ≤ 30°

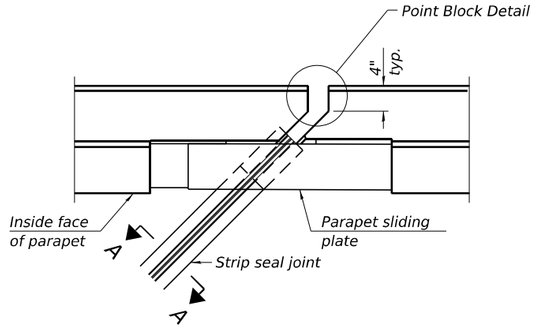

FOR SKEWS > 30°

PLAN AT PARAPET

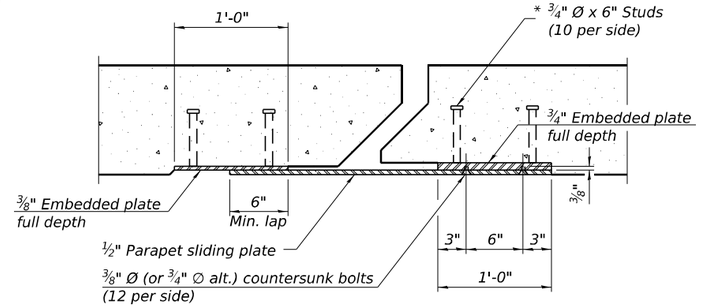

SECTION B-B

(¾" Ø countersunk bolts extending into concrete shall have hex nuts tack welded to the back of the embedded plates with end caps provided.)

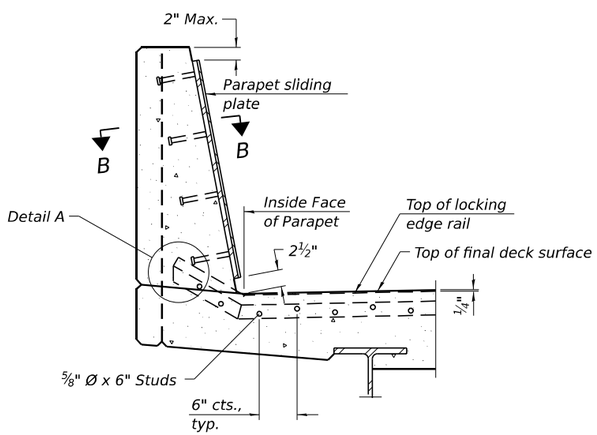

SECTION AT PARAPET

(Skews > 30° shown. Skews ≤ 30° similar except as shown in plan view.)

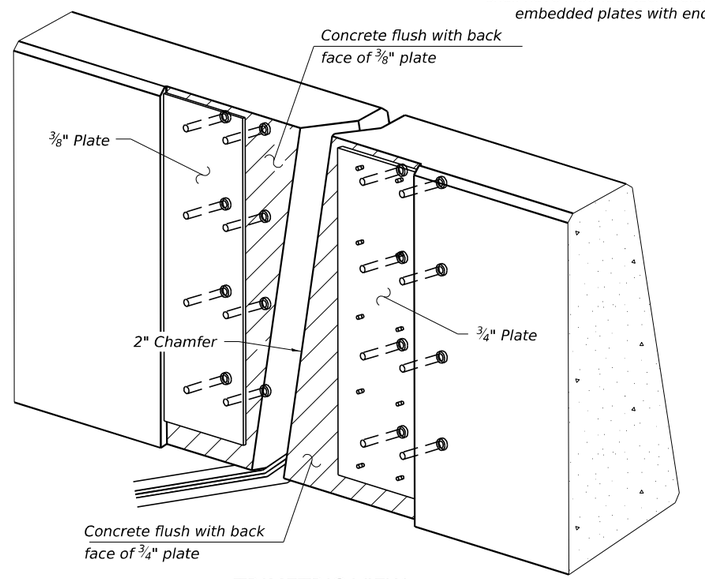

TRIMETRIC VIEW

(Showing embedded plates only)

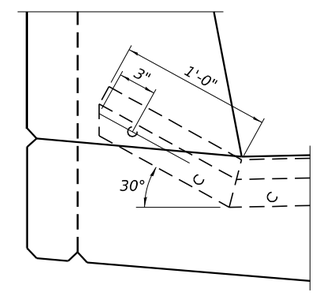

DETAIL A

Notes:

The strip seal shall be made continuous and shall have a minimum thickness of ¼". The configuration of the strip seal shall match the configuration of the locking edge rails. Open or "webbed" strip seal gland configurations are not permitted. The gland shall be sized for a maximum rated movement of 4 inches.

The locking edge rails depicted are configured for typical applications and are conceptual only. The actual configuration of the locking edge rails and matching strip seal may vary from manufacturer to manufacturer provided they fit the application and meet the minimum anchorage shown. Flanged edge rails, however, will not be allowed. Locking edge rails may exceed the 4½" maximum depth provided the anchorage system is revised according to the manufacturer's recommendation.

The manufacturer's recommended installation methods shall be followed.

All steel components shall be galvanized after fabrication according to Article 520.03 of the Standard Specifications.

The Maximum space between locking edge rail segments shall be 3/16" and sealed with a suitable sealant; however, any rail joint within 10' measured perpendicular to the face of the curb or parapet shall be welded as shown in the locking edge rail splice detail.

Cost of parapet sliding plates, embedded plates, and anchorage studs included with Preformed Joint Strip Seal.

39" constant slope barrier shown, 44" constant slope barrier similar as noted.

The concrete opening below the strip seal will vary based on the locking edge rail chosen by the Contractor. Deck and parapet lengths shown elsewhere in the plans are dimensioned to the concrete opening, not the joint opening, and are based on the rolled locking edge rail. If the Contractor elects to use a different locking edge rail, dimensional adjustments may be required. One exception to this would be the strip seal joint at the end of the precast bridge approach slab. For these cases the pavement connector length shall be adjusted, not the length of the bridge approach slab.

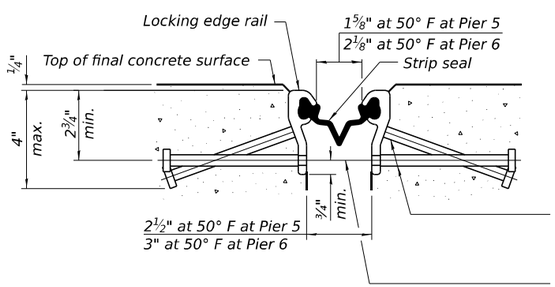

SHOWING ROLLED RAIL JOINT

* ⅝" Ø x 6" studs @ 6" cts. (alternate angled/bent studs with horizontal studs)

⅜" Ø threaded rods in 7/16" Ø holes at 4'-0"± cts. for holding the proper joint opening based on the temperature during the deck pour. Place to miss studs. All rods shall be burned, or sawed off flush with the plates after concrete is set.

SECTION A-A

* Granular or solid flux filled headed studs conforming to Article 1006.32 of the Std. Specs., automatically end welded.

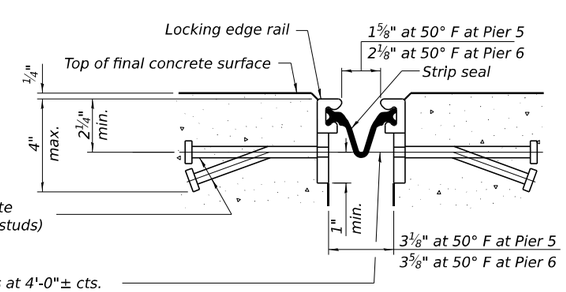

SHOWING WELDED RAIL JOINT

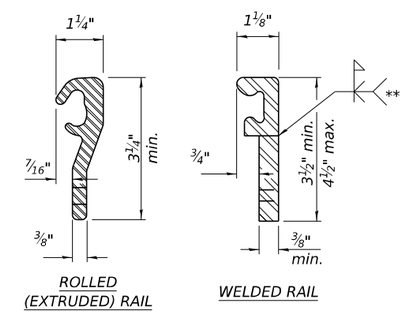

ROLLED (EXTRUDED) RAIL

WELDED RAIL

LOCKING EDGE RAILS

** Back gouge not required if complete joint penetration is verified by mock-up.

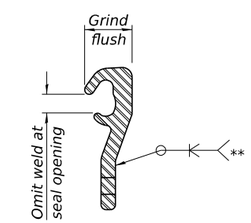

LOCKING EDGE RAIL SPLICE

The inside of the locking edge rail groove shall be free of weld residue. Rolled rail shown, welded rail similar.

BILL OF MATERIAL

Item	Unit	Total
Preformed Joint Strip Seal	Foot	210

TRANSYSTEMS

USER NAME = mbmcwhorter	DESIGNED - IIP	REVISED -	
	CHECKED - IS	REVISED -	
PLOT SCALE =	DRAWN - IIP	REVISED -	
PLOT DATE = 11/13/2025	CHECKED - IS	REVISED -	

STATE OF ILLINOIS
DEPARTMENT OF TRANSPORTATION

PREFORMED JOINT STRIP SEAL
STRUCTURE NO. 060-0202

SHEET S-49 OF S-80 SHEETS

F.A.P. RTE.	SECTION	COUNTY	TOTAL SHEETS	SHEET NO.
0002	(103,104)BR-1	MADISON	178	128

CONTRACT NO. 76N65

ILLINOIS FED. AID PROJECT

MODEL: Sheet View
FILE NAME: pw://hq-pwint01.a-e.transyscorp.com:transyscorp-pw1/Documents/Projects_2020/CH401/401200165/Bridge/304.02 - Sheet Files/0600202-D876N65-051-EXPANSION JOINT DETAILS

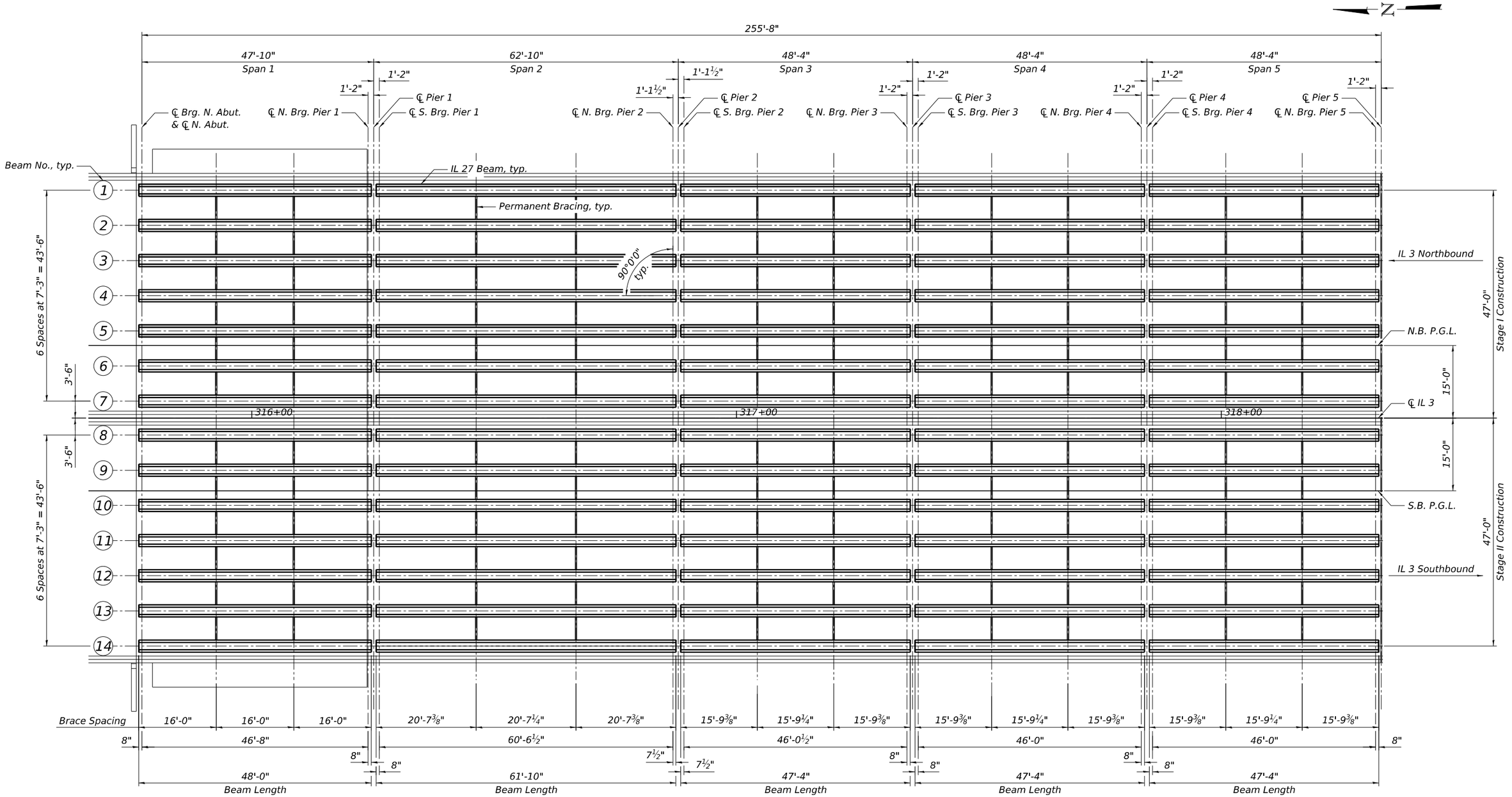

FRAMING PLAN SPAN 1-5

NOTE:

1. See Sheet S-56 of S-80 for Permanent Bracing Details and Bearing Details.
2. See Sheets S-53 thru S-55 of S-80 for Interior Beam Moment Tables and Beam Reaction Tables.

MODEL: Sheet
FILE NAME: pw://hq-pwint01.a-e.transysscorp.com:transysscorp-pw1/Documents/Projects_2020/CH401/401200165/Bridge/304.02 - Sheet Files/0600202-D876N65-052-FRAMING PLAN 1.dgn

TRANSYSTEMS

USER NAME = mbmcwhorter	DESIGNED - AWT	REVISED -	
	CHECKED - IIP	REVISED -	
PLOT SCALE =	DRAWN - AWT	REVISED -	
PLOT DATE = 11/13/2025	CHECKED - IIP	REVISED -	

STATE OF ILLINOIS
DEPARTMENT OF TRANSPORTATION

FRAMING PLAN 1
STRUCTURE NO. 060-0202

SHEET S-50 OF S-80 SHEETS

F.A.P. RTE.	SECTION	COUNTY	TOTAL SHEETS	SHEET NO.
0002	(103,104)BR-1	MADISON	178	129
		CONTRACT NO. 76N65		
	ILLINOIS	FED. AID PROJECT		

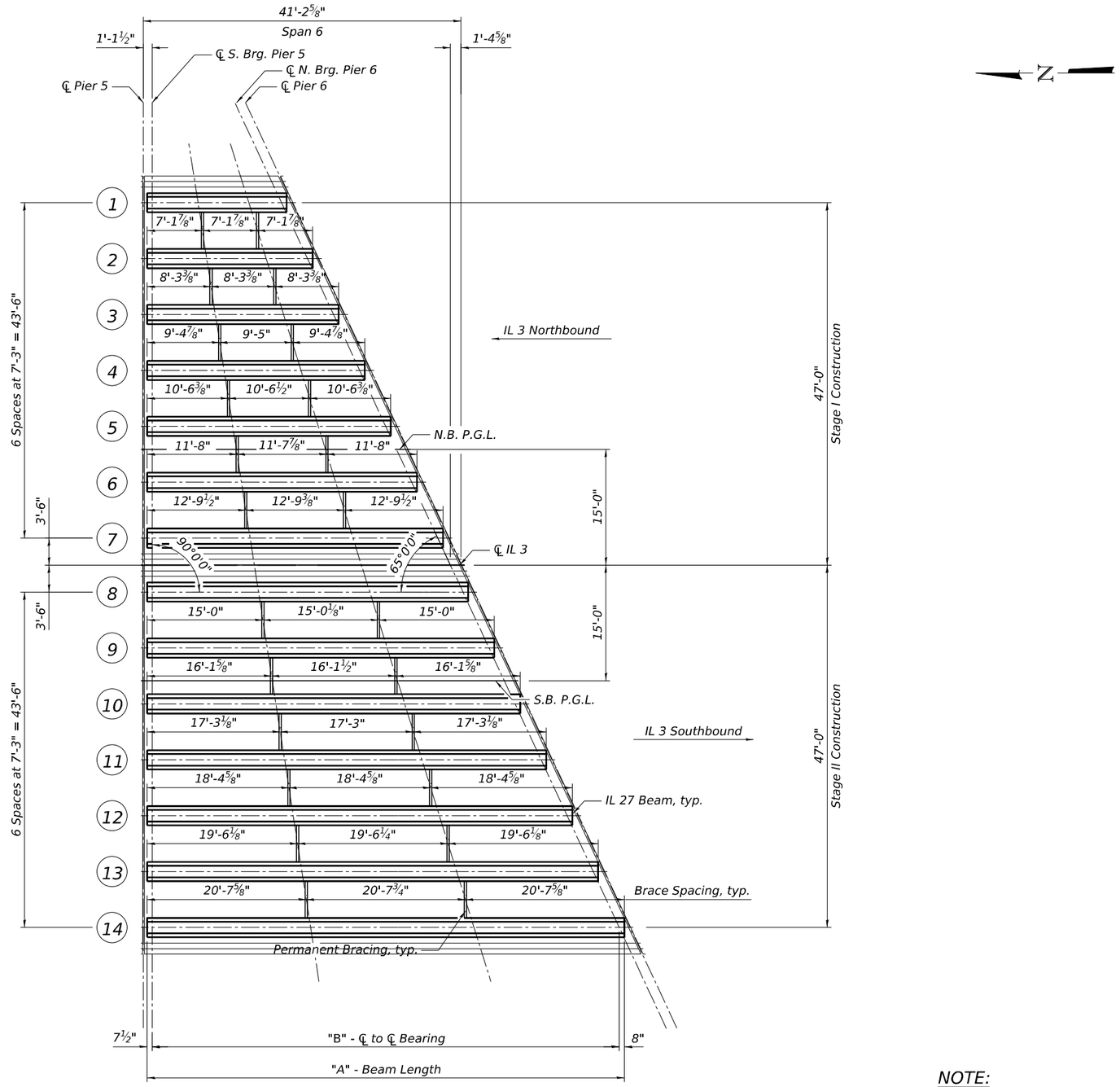

Span	Beam	A	B
6 NB	1	18'-1"	16'-9½"
	2	21'-5⅝"	20'-2⅛"
	3	24'-10⅛"	23'-6⅝"
	4	28'-2¾"	26'-11¼"
	5	31'-7¼"	30'-3¾"
	6	34'-11⅞"	33'-8⅜"
	7	38'-4⅜"	37'-0⅞"
6 SB	8	41'-7⅝"	40'-4⅛"
	9	45'-0⅛"	43'-8⅝"
	10	48'-4¾"	47'-1¼"
	11	51'-9¼"	50'-5¾"
	12	55'-1⅞"	53'-10⅜"
	13	58'-6½"	57'-3"
	14	61'-11"	60'-7½"

FRAMING PLAN SPAN 6

NOTE:

1. See Sheet S-56 of S-80 for Permanent Bracing Details and Bearing Details.
2. See Sheets S-53 thru S-55 of S-80 for Interior Beam Moment Tables and Beam Reaction Tables.

MODEL: Sheet
FILE NAME: pw://hq-pwin01.a-e.transyscorp.com:transyscorp-pw1/Documents/Projects_2020/CH401/401200165/Bridge/304.02 - Sheet Files/06000202-0876N65-053-FRAMING PLAN 2.dgn

TRANSYSTEMS

USER NAME = mbmcwhorter	DESIGNED - AWT	REVISED -	
	CHECKED - IIP	REVISED -	
PLOT SCALE =	DRAWN - AWT	REVISED -	
PLOT DATE = 11/13/2025	CHECKED - IIP	REVISED -	

STATE OF ILLINOIS
DEPARTMENT OF TRANSPORTATION

FRAMING PLAN 2
STRUCTURE NO. 060-0202

SHEET S-51 OF S-80 SHEETS

F.A.P. RTE.	SECTION	COUNTY	TOTAL SHEETS	SHEET NO.
0002	(103,104)BR-1	MADISON	178	130
		CONTRACT NO. 76N65		
		ILLINOIS	FED. AID PROJECT	

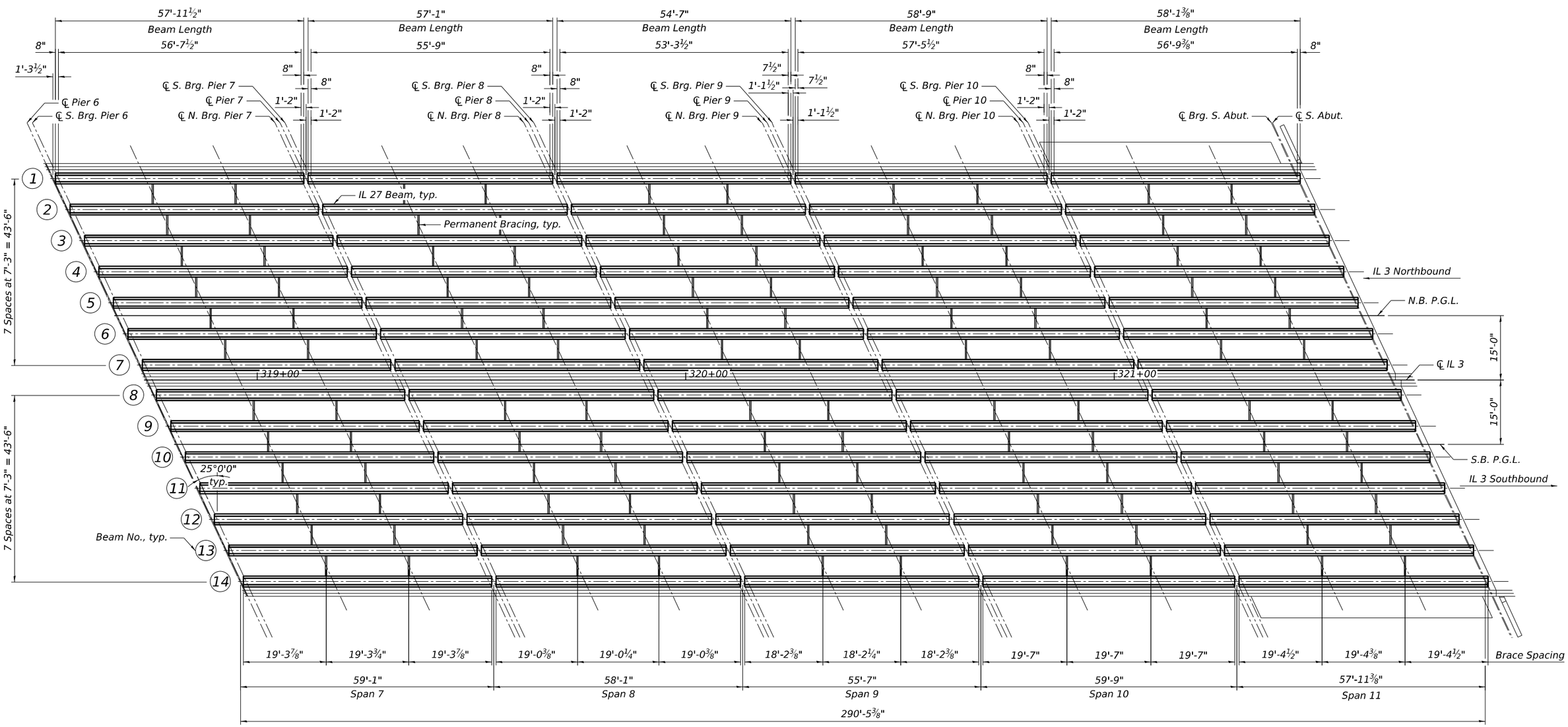

NOTE:

1. See Sheet S-56 of S-80 for Permanent Bracing Details and Bearing Details.
2. See Sheets S-53 thru S-55 of S-80 for Interior Beam Moment Tables and Beam Reaction Tables.

FRAMING PLAN SPAN 7-11

MODEL: Sheet
FILE NAME: pw://hq-pwint01.a-e.transyscorp.com:transyscorp-pw1/Documents/Projects_2020/CH401/401200165/Bridge/304.02 - Sheet Files/0600202-D876N65-054-FRAMING PLAN 3.dgn

TRANSYSTEMS

USER NAME = mbmcwhorter	DESIGNED - AWT	REVISED -	
	CHECKED - IIP	REVISED -	
PLOT SCALE =	DRAWN - AWT	REVISED -	
PLOT DATE = 11/13/2025	CHECKED - IIP	REVISED -	

STATE OF ILLINOIS
DEPARTMENT OF TRANSPORTATION

FRAMING PLAN 3
STRUCTURE NO. 060-0202

SHEET S-52 OF S-80 SHEETS

F.A.P. RTE.	SECTION	COUNTY	TOTAL SHEETS	SHEET NO.
0002	(103,104)BR-1	MADISON	178	131
		CONTRACT NO. 76N65		
	ILLINOIS	FED. AID PROJECT		

Spans 1-5

INTERIOR BEAM MOMENT TABLE										
		0.4 Sp. 1	Pier 1	0.5 Sp. 2	Pier 2	0.5 Sp. 3	Pier 3	0.5 Sp. 4	Pier 4	0.6 Sp. 5
I	(in^4)	33,879	33,879	33,879	33,879	33,879	33,879	33,879	33,879	33,879
I'	(in^4)	133,131	133,131	133,131	133,131	133,131	133,131	133,131	133,131	133,131
S_b	(in^3)	3,060	3,060	3,060	3,060	3,060	3,060	3,060	3,060	3,060
S_b'	(in^3)	6,151	6,151	6,151	6,151	6,151	6,151	6,151	6,151	6,151
S_t	(in^3)	2,127	2,127	2,127	2,127	2,127	2,127	2,127	2,127	2,127
S_t'	(in^3)	24,853	24,853	24,853	24,853	24,853	24,853	24,853	24,853	24,853
DC1	(k/')	1.240	1.240	1.240	1.240	1.240	1.240	1.240	1.240	1.240
M_{DC1}	('k)	179	-402	238	-346	89	-200	111	-303	210
DC2	(k/')	0.163	0.163	0.163	0.163	0.163	0.163	0.163	0.163	0.163
M_{DC2}	('k)	24	-53	31	-46	12	-26	15	-40	28
DW	(k/')	0.363	0.363	0.363	0.363	0.363	0.363	0.363	0.363	0.363
M_{DW}	('k)	53	-118	70	-101	23	-58	32	-89	61
LLDF	('k)	0.67	0.62	0.62	0.62	0.67	0.67	0.67	0.67	0.67
M_{LL+IM}	('k)	482	-356	496	-355	377	-253	383	-315	482

INTERIOR BEAM REACTION TABLE											
			North Abutment	Pier 1 Span 1	Pier 1 Span 2	Pier 2 Span 2	Pier 2 Span 3	Pier 3 Span 3	Pier 3 Span 4	Pier 4 Span 4	Pier 4 Span 5	Pier 5 Span 5
	LLDF	(k)	0.76	0.76	0.76	0.76	0.76	0.76	0.76	0.76	0.76	0.76
	OCF	(k)	-	-	-	-	-	-	-	-	-	-
	R_{DC1}	(k)	21.2	38.1	39.9	38.1	33.0	26.9	27.8	32.1	35.7	22.8
*	R_{DC2}	(k)	2.8	5.0	5.2	5.0	4.3	3.5	3.7	4.2	4.7	3.0
*	R_{DW}	(k)	6.2	11.1	11.7	11.1	9.7	7.9	8.1	9.4	10.4	6.7
*	R_{LL+IM}	(k)	63.3	76.6	78.7	78.4	71.7	70.0	70.1	71.7	76.1	63.4
	R_{Total}(Strength I)(Impact)	(k)	93.6	204.6	211.6	207.8	186.7	172.4	174.3	184.9	199.2	153.2
	R_{Total}(Strength I)(No Impact)	(k)	79.9	177.9	184.3	180.2	161.2	146.6	148.6	159.3	172.3	129.6

*At continuous piers, reactions from composite loads are assumed to be equally distributed to each bearing line.

I: Non-composite moment of inertia of beam section ($in.^4$).
I': Composite moment of inertia of beam section ($in.^4$).
S_b: Non-composite section modulus for the bottom fiber of the prestressed beam ($in.^3$).
S_b': Composite section modulus for the bottom fiber of the prestressed beam ($in.^3$).
S_t: Non-composite section modulus for the top fiber of the prestressed beam ($in.^3$).
S_t': Composite section modulus for the top fiber of the prestressed beam ($in.^3$).
DC1: Un-factored non-composite dead load (kips/ft.).
M_{DC1}: Un-factored moment due to non-composite dead load (kip-ft.).
DC2: Un-factored long-term composite (superimposed excluding future wearing surface) dead load (kips/ft.).
M_{DC2}: Un-factored moment due to long-term composite (superimposed excluding future wearing surface) dead load (kip-ft.).
DW: Un-factored long-term composite (superimposed future wearing surface only) dead load (kips/ft.).
M_{DW}: Un-factored moment due to long-term composite (superimposed future wearing surface only) dead load (kip-ft).
LLDF: Live Load Distribution Factor for moment and shear computed according to Article 4.6.2.2 and further IDOT provisions.
M_{LL+IM}: Un-factored live load moment plus dynamic load allowance (impact) (kip-ft.).
OCF: Obtuse Correction Factor computed according to Article 4.6.2.2.3c or as further simpliefied by IDOT provisions.
R_{DC1}: Un-factored reaction due to non-composite dead load (kip).
R_{DC2}: Un-factored reaction due to long-term composite (superimposed excluding future wearing surface) dead load (kip).
R_{DW}: Un-factored reaction due to long-term composite (superimposed future wearing surface only) dead load (kip).
R_{LL}: Un-factored live load reaction (kip).
R_{IM}: Un-factored dynamic load allowance (impact) (kip).
R_{Total} (Strength I)(Impact): Total factored reaction including dynamic load allowance (impact) (kip).
R_{Total} (Strength I)(No Impact): Total factored reaction not including dynamic load allowance (impact) (kip).

Span 6

BEAM MOMENT TABLE									
		0.5 Sp. 6							
		Beam 1	Beam 2	Beam 6	Beam 7	Beam 8	Beam 9	Beam 13	Beam 14
I	(in^4)	33,879	33,879	33,879	33,879	33,879	33,879	33,879	33,879
I'	(in^4)	132,013	133,131	133,131	132,013	132,013	133,131	133,131	132,013
S_b	(in^3)	3,060	3,060	3,060	3,060	3,060	3,060	3,060	3,060
S_b'	(in^3)	6,132	6,151	6,151	6,132	6,132	6,151	6,151	6,132
S_t	(in^3)	2,127	2,127	2,127	2,127	2,127	2,127	2,127	2,127
S_t'	(in^3)	24,124	24,853	24,853	24,124	24,124	24,853	24,853	24,124
DC1	(k/')	1.291	1.240	1.240	1.291	1.291	1.240	1.240	1.291
M_{DC1}	('k)	45	63	176	222	263	296	508	593
DC2	(k/')	0.163	0.163	0.163	0.163	0.163	0.163	0.163	0.163
M_{DC2}	('k)	6	8	23	28	33	39	67	75
DW	(k/')	0.283	0.363	0.363	0.283	0.283	0.363	0.363	0.283
M_{DW}	('k)	10	18	51	49	58	87	149	130
LLDF	('k)	0.89	0.84	0.73	0.71	0.70	0.68	0.64	0.63
M_{LL+IM}	('k)	209	255	429	472	514	565	801	860

BEAM REACTION TABLE									
		Pier 5 Span 6							
		Beam 1	Beam 2	Beam 6	Beam 7	Beam 8	Beam 9	Beam 13	Beam 14
LLDF	(k)	0.76	0.76	0.76	0.76	0.76	0.76	0.76	0.76
OCF	(k)	-	-	-	-	-	-	-	-
R_{DC1}	(k)	10.8	12.5	20.9	23.9	26.0	27.1	35.5	39.1
* R_{DC2}	(k)	1.4	1.6	2.7	3.0	3.3	3.6	4.7	4.9
* R_{DW}	(k)	2.4	3.7	6.1	5.3	5.7	7.9	10.4	8.6
* R_{LL+IM}	(k)	47.8	50.2	59.9	62.7	65.1	67.3	74.5	75.9
R_{Total} (Strength I)(Impact)	(k)	102.6	111.0	143.4	151.3	159.1	167.9	196.0	200.8
R_{Total} (Strength I)(No Impact)	(k)	83.6	91.4	121.0	128.0	135.1	143.3	169.8	174.3

BEAM REACTION TABLE									
		Pier 6 Span 6							
		Beam 1	Beam 2	Beam 6	Beam 7	Beam 8	Beam 9	Beam 13	Beam 14
LLDF	(k)	0.76	0.76	0.76	0.76	0.76	0.76	0.76	0.76
OCF	(k)	1.07	1.07	1.08	1.08	1.08	1.09	1.09	1.10
R_{DC1}	(k)	10.8	12.5	20.9	23.9	26.0	27.1	35.5	39.1
* R_{DC2}	(k)	1.4	1.6	2.7	3.0	3.3	3.6	4.7	4.9
* R_{DW}	(k)	2.4	3.7	6.1	5.3	5.7	7.9	10.4	8.6
* R_{LL+IM}	(k)	51.0	53.7	64.7	67.9	70.6	73.1	81.5	83.2
R_{Total} (Strength I)(Impact)	(k)	108.0	117.1	151.9	160.4	168.7	178.1	208.3	213.5
R_{Total} (Strength I)(No Impact)	(k)	83.6	91.4	121.0	128.0	135.1	143.3	169.8	174.3

*At continuous piers, reactions from composite loads are assumed to be equally distributed to each bearing line.

I: Non-composite moment of inertia of beam section ($in.^4$).
I': Composite moment of inertia of beam section ($in.^4$).
S_b: Non-composite section modulus for the bottom fiber of the prestressed beam ($in.^3$).
S_b': Composite section modulus for the bottom fiber of the prestressed beam ($in.^3$).
S_t: Non-composite section modulus for the top fiber of the prestressed beam ($in.^3$).
S_t': Composite section modulus for the top fiber of the prestressed beam ($in.^3$).
DC1: Un-factored non-composite dead load (kips/ft.).
M_{DC1}: Un-factored moment due to non-composite dead load (kip-ft.).
DC2: Un-factored long-term composite (superimposed excluding future wearing surface) dead load (kips/ft.).
M_{DC2}: Un-factored moment due to long-term composite (superimposed excluding future wearing surface) dead load (kip-ft.).
DW: Un-factored long-term composite (superimposed future wearing surface only) dead load (kips/ft.).
M_{DW}: Un-factored moment due to long-term composite (superimposed future wearing surface only) dead load (kip-ft).
LLDF: Live Load Distribution Factor for moment and shear computed according to Article 4.6.2.2 and further IDOT provisions.
M_{LL+IM}: Un-factored live load moment plus dynamic load allowance (impact) (kip-ft.).
OCF: Obtuse Correction Factor computed according to Article 4.6.2.2.3c or as further simplifiedf by IDOT provisions.
R_{DC1}: Un-factored reaction due to non-composite dead load (kip).
R_{DC2}: Un-factored reaction due to long-term composite (superimposed excluding future wearing surface) dead load (kip).
R_{DW}: Un-factored reaction due to long-term composite (superimposed future wearing surface only) dead load (kip).
R_{LL}: Un-factored live load reaction (kip).
R_{IM}: Un-factored dynamic load allowance (impact) (kip).
R_{Total} (Strength I)(Impact): Total factored reaction including dynamic load allowance (impact) (kip).
R_{Total} (Strength I)(No Impact): Total factored reaction not including dynamic load allowance (impact) (kip).

MODEL: Sheet Views
FILE NAME: pw://hq-pwint01.a-e.transyscorp.com:transyscorp-pw1/Documents/Projects_2020/CH401/401200165/Bridge/304.02 - Sheet Files/06000202-D876N65-056-MOMENT AND REACTION TABLES 2.dgn

TRANSYSTEMS

USER NAME = mbmcwhorter	DESIGNED - AWT	REVISED -	
	CHECKED - IIP	REVISED -	
PLOT SCALE =	DRAWN - JSC	REVISED -	
PLOT DATE = 11/13/2025	CHECKED - AWT	REVISED -	

STATE OF ILLINOIS
DEPARTMENT OF TRANSPORTATION

MOMENT AND REACTION TABLES 2
STRUCTURE NO. 060-0202

SHEET S-54 OF S-80 SHEETS

F.A.P. RTE.	SECTION	COUNTY	TOTAL SHEETS	SHEET NO.
0002	(103,104)BR-1	MADISON	178	133
		CONTRACT NO. 76N65		
	ILLINOIS	FED. AID PROJECT		

Spans 7-11

INTERIOR BEAM MOMENT TABLE										
		0.4 Sp. 7	Pier 7	0.5 Sp. 8	Pier 8	0.5 Sp. 9	Pier 9	0.5 Sp. 10	Pier 10	South Abutment
I	(in^4)	33,879	33,879	33,879	33,879	33,879	33,879	33,879	33,879	33,879
I'	(in^4)	133,131	133,131	133,131	133,131	133,131	133,131	133,131	133,131	133,131
S_b	(in^3)	3,060	3,060	3,060	3,060	3,060	3,060	3,060	3,060	3,060
S_b'	(in^3)	6,151	6,151	6,151	6,151	6,151	6,151	6,151	6,151	6,151
S_t	(in^3)	2,127	2,127	2,127	2,127	2,127	2,127	2,127	2,127	2,127
S_t'	(in^3)	24,853	24,853	24,853	24,853	24,853	24,853	24,853	24,853	24,853
DC1	(k/')	1.240	1.240	1.240	1.240	1.240	1.240	1.240	1.240	1.240
M_{DC1}	('k)	321	-444	147	-308	162	-325	163	-455	318
DC2	(k/')	0.163	0.163	0.163	0.163	0.163	0.163	0.163	0.163	0.163
M_{DC2}	('k)	42	-58	19	-41	21	-43	21	-60	42
DW	(k/')	0.363	0.363	0.363	0.363	0.363	0.363	0.363	0.363	0.363
M_{Dw}	('k)	94	-130	43	-90	47	-95	48	-133	93
LLDF	('k)	0.63	0.63	0.63	0.63	0.64	0.63	0.63	0.63	0.63
M_{L+IM}	('k)	613	-105	455	-113	441	-115	469	-98	614

INTERIOR BEAM REACTION TABLE											
		Pier 6 Span 7	Pier 7 Span 7	Pier 7 Span 8	Pier 8 Span 8	Pier 8 Span 9	Pier 9 Span 9	Pier 9 Span 10	Pier 10 Span 10	Pier 10 Span 11	South Abutment
	LLDF (k)	0.76	0.76	0.76	0.76	0.76	0.76	0.76	0.76	0.76	0.76
	OCF (k)	1.09	1.09	1.09	1.09	1.09	1.09	1.10	1.10	1.09	1.09
	R_{DC1} (k)	28.2	43.6	38.4	33.7	34.2	34.8	34.9	39.2	43.8	28.1
*	R_{DC2} (k)	3.7	5.7	5.0	4.4	4.5	4.6	4.6	5.2	5.8	3.7
*	R_{DW} (k)	8.3	12.8	11.2	9.9	10.0	10.2	10.2	11.5	12.8	8.2
*	R_{L+IM} (k)	75.2	89.5	84.7	82.7	81.6	82.0	83.5	85.6	89.5	75.2
	R_{Total} (Strength I)(Impact) (k)	183.9	237.4	219.2	207.2	206.0	207.9	210.8	222.4	237.8	183.6
	R_{Total} (Strength I)(No Impact) (k)	156.5	206.7	189.6	177.6	177.0	178.8	181.0	192.6	207.1	156.2

*At continuous piers, reactions from composite loads are assumed to be equally distributed to each bearing line.

I: Non-composite moment of inertia of beam section ($in.^4$).
I': Composite moment of inertia of beam section ($in.^4$).
S_b: Non-composite section modulus for the bottom fiber of the prestressed beam ($in.^3$).
S_b': Composite section modulus for the bottom fiber of the prestressed beam ($in.^3$).
S_t: Non-composite section modulus for the top fiber of the prestressed beam ($in.^3$).
S_t': Composite section modulus for the top fiber of the prestressed beam ($in.^3$).
DC1: Un-factored non-composite dead load (kips/ft.).
M_{DC1}: Un-factored moment due to non-composite dead load (kip-ft.).
DC2: Un-factored long-term composite (superimposed excluding future wearing surface) dead load (kips/ft.).
M_{DC2}: Un-factored moment due to long-term composite (superimposed excluding future wearing surface) dead load (kip-ft.).
DW: Un-factored long-term composite (superimposed future wearing surface only) dead load (kips/ft.).

M_{DW}: Un-factored moment due to long-term composite (superimposed future wearing surface only) dead load (kip-ft).
LLDF: Live Load Distribution Factor for moment and shear computed according to Article 4.6.2.2 and further IDOT provisions.
M_{L+IM}: Un-factored live load moment plus dynamic load allowance (impact) (kip-ft.).
OCF: Obtuse Correction Factor computed according to Article 4.6.2.2.3c or as further simpliefied by IDOT provisions.
R_{DC1}: Un-factored reaction due to non-composite dead load (kip).
R_{DC2}: Un-factored reaction due to long-term composite (superimposed excluding future wearing surface) dead load (kip).
R_{DW}: Un-factored reaction due to long-term composite (superimposed future wearing surface only) dead load (kip).
R_L: Un-factored live load reaction (kip).
R_{IM}: Un-factored dynamic load allowance (impact) (kip).
R_{Total} (Strength I)(Impact): Total factored reaction including dynamic load allowance (impact) (kip).
R_{Total} (Strength I)(No Impact): Total factored reaction not including dynamic load allowance (impact) (kip).

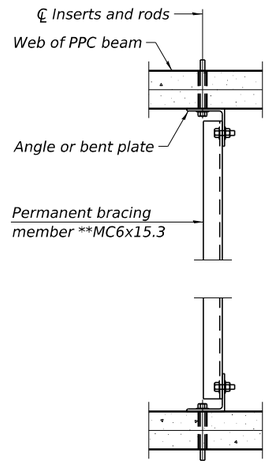

PLAN

(When 90° bracing is specified)

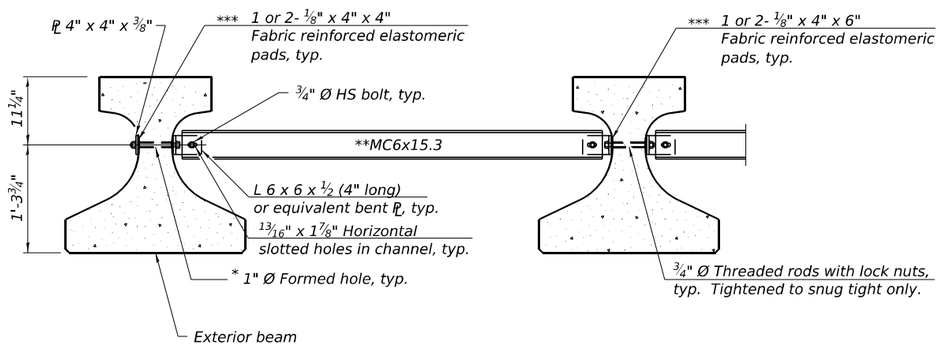

Notes:

All material for bracing shall be hot dip galvanized according to AASHTO M111 unless otherwise noted.

Two hardened washers are required for each set of oversized holes.

All holes shall be 15/16" Ø unless otherwise noted.

5/16" x 3" x 3" plate washers are required over all slotted holes.

All bolts, threaded rods, and hardware shall be galvanized according to AASHTO M232.

Threaded rods shall be ASTM F 1554 Grade 55.

Bracing shall be installed as beams are erected and tightened as soon as possible during erection.

Permanent bracing shall not be paid for separately, but shall be included in the cost of Furnishing and Erecting Precast Prestressed Concrete Beams.

* Fabricator shall locate to miss strands within permissible tolerances.

** Alternate MC6x18 channels are permitted to facilitate material acquisition.

*** Place pads as necessary to provide a flat mounting surface between the steel and concrete.

PERMANENT BRACING DETAILS FOR IL27

MODEL: Sheet
FILE NAME: pw://hq-pwint01.a-e.transyscorp.com:transyscorp-pw1/Documents/Projects_2020/CH401/401200165/Bridge/304.02 - Sheet Files/0600202-D876N65-056-BRACING DETAILS.dgn

TRANSYSTEMS

USER NAME = mbmcwhorter	DESIGNED - AWT	REVISED -	
	CHECKED - IIP	REVISED -	
PLOT SCALE =	DRAWN - AWT	REVISED -	
PLOT DATE = 11/13/2025	CHECKED - IIP	REVISED -	

STATE OF ILLINOIS
DEPARTMENT OF TRANSPORTATION

PERMANENT BRACING DETAILS
STRUCTURE NO. 060-0202

SHEET S-56 OF S-80 SHEETS

F.A.P. RTE.	SECTION	COUNTY	TOTAL SHEETS	SHEET NO.
0002	(103,104)BR-1	MADISON	178	135
		CONTRACT NO. 76N65		
	ILLINOIS	FED. AID PROJECT		

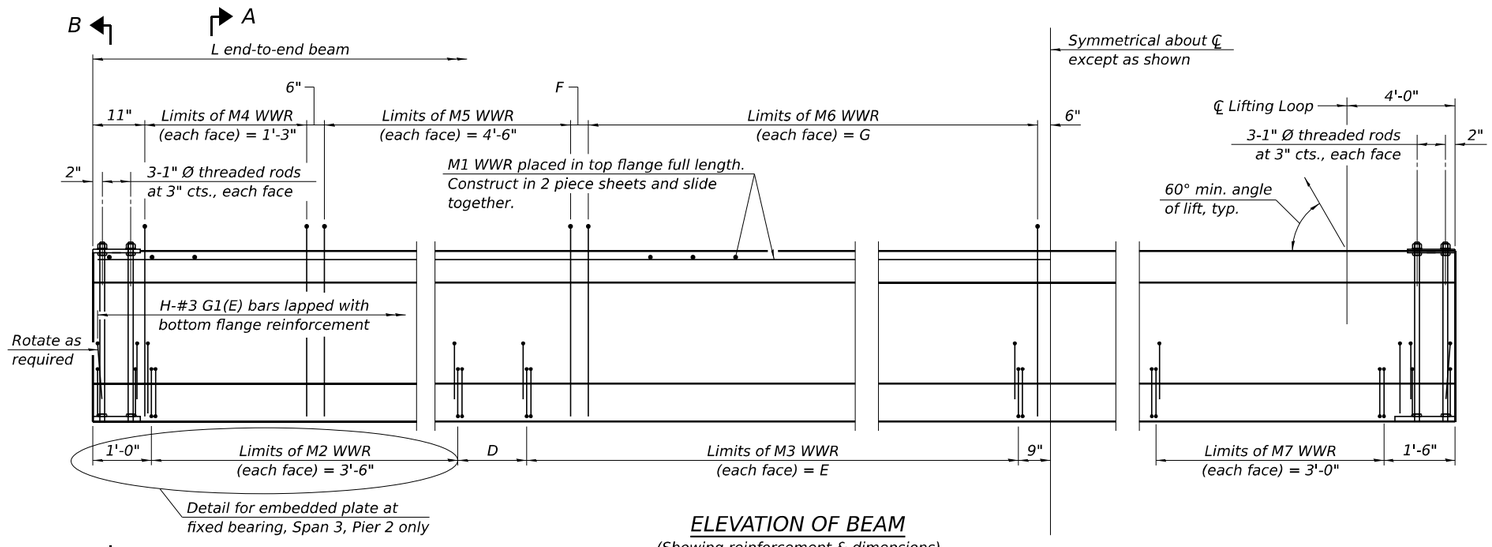

ELEVATION OF BEAM
(Showing reinforcement & dimensions)

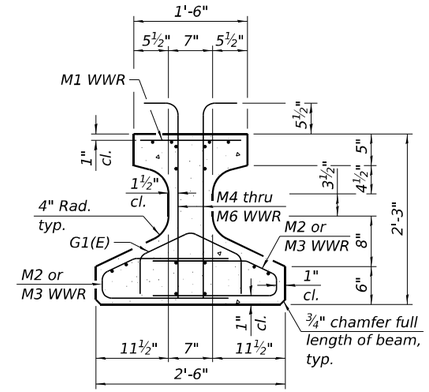

SECTION A-A

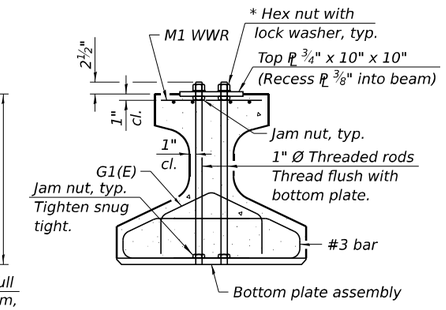

SECTION B-B
* Only tighten sufficiently to compress lock washers

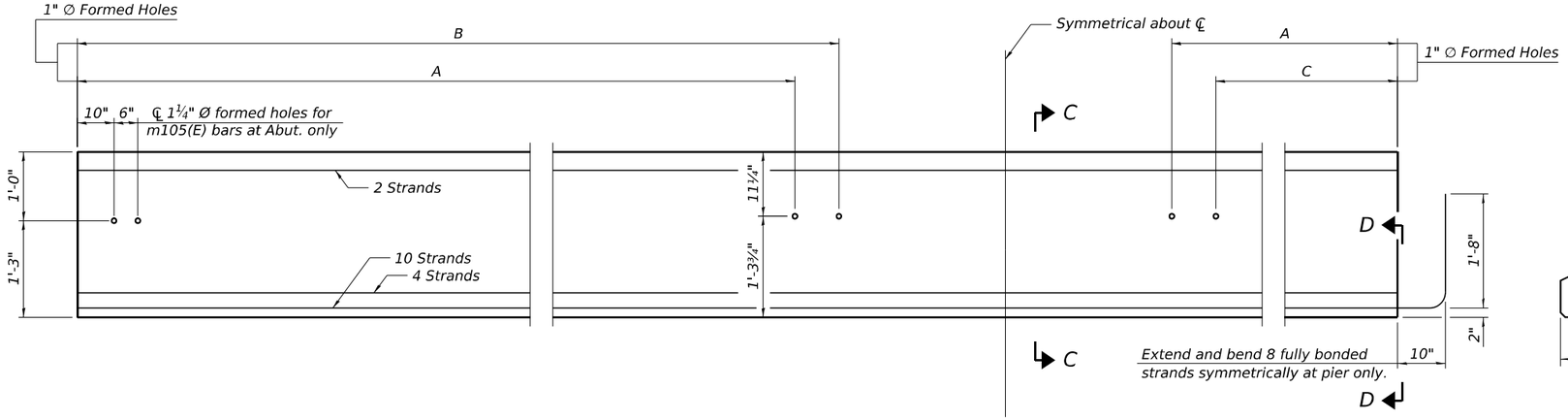

ELEVATION OF BEAM
(Showing prestressing steel)

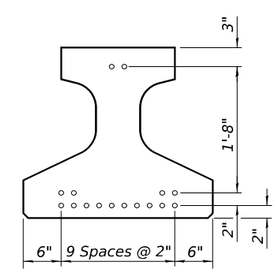

SECTION C-C
(16-0.6" Ø 270 ksi strands)

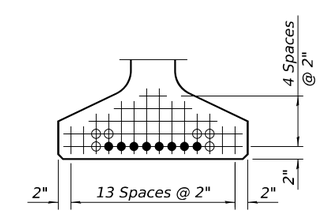

VIEW D-D

- ○ Fully bonded strand
- ▲ Partially debonded strand
- ● Extended and bend strand (at pier only) (fully bonded)

BEAM DIMENSIONS

Span	Beam	L	A	B	C	D	E	F	G	H
1	1-14	48'-0"	16'-0"	-	-	9"	18'-0"	0'-4"	16'-0"	58
3	1-14	47'-4"	15'-9⅜"	-	-	5"	18'-0"	1'-0"	15'-0"	60
4-5	1-14	47'-4"	15'-9⅜"	-	-	5"	18'-0"	1'-0"	15'-0"	58
6	1	18'-1"	-	7'-1⅞"	3'-9¼"	9½"	3'-0"	0'-4½"	1'-0"	38
6	2	21'-5⅝"	7'-1⅞"	8'-3⅜"	4'-10⅞"	11⅞"	4'-6"	0'-0⅞"	3'-0"	40
6	3	24'-10⅛"	8'-3⅜"	9'-4⅞"	6'-0⅜"	1'-2⅛"	6'-0"	0'-9⅛"	4'-0"	42
6	4	28'-2¾"	9'-4⅞"	10'-6⅜"	7'-1⅞"	1'-4⅜"	7'-6"	0'-5⅜"	6'-0"	44
6	5	31'-7¼"	10'-6⅜"	11'-8"	8'-3⅜"	1'-6⅝"	9'-0"	0'-1⅜ "	8'-0"	46
6	6	34'-11⅞"	11'-8"	12'-9½"	9'-4⅞"	3"	12'-0"	0'-10"	9'-0"	50
6	7	38'-4⅜"	12'-9½"	-	-	5¼"	13'-6"	0'-6¼"	11'-0"	52

Note:
See sheets S-60 and S-61 of S-80 for additional details and Bill of Material.

MODEL: Sheet
FILE NAME: pw://hq-pwin01.a-e.transyscorp.com:transyscorp-pw1/Documents/Projects_2020/CH401/401200165/Bridge/304.02 - Sheet Files/06000202-0876N65-059-BEAM ELEVATION & DETAILS 1.dgn

TRANSYSTEMS

USER NAME = mbmcwhorter	DESIGNED - AWT	REVISED -	
	CHECKED - IIP	REVISED -	
PLOT SCALE =	DRAWN - JSC	REVISED -	
PLOT DATE = 11/13/2025	CHECKED - AWT	REVISED -	

STATE OF ILLINOIS
DEPARTMENT OF TRANSPORTATION

IL27N BEAM 1
STRUCTURE NO. 060-0202
SHEET S-57 OF S-80 SHEETS

F.A.P. RTE.	SECTION	COUNTY	TOTAL SHEETS	SHEET NO.
0002	(103,104)BR-1	MADISON	178	136
		CONTRACT NO. 76N65		
		ILLINOIS	FED. AID PROJECT	

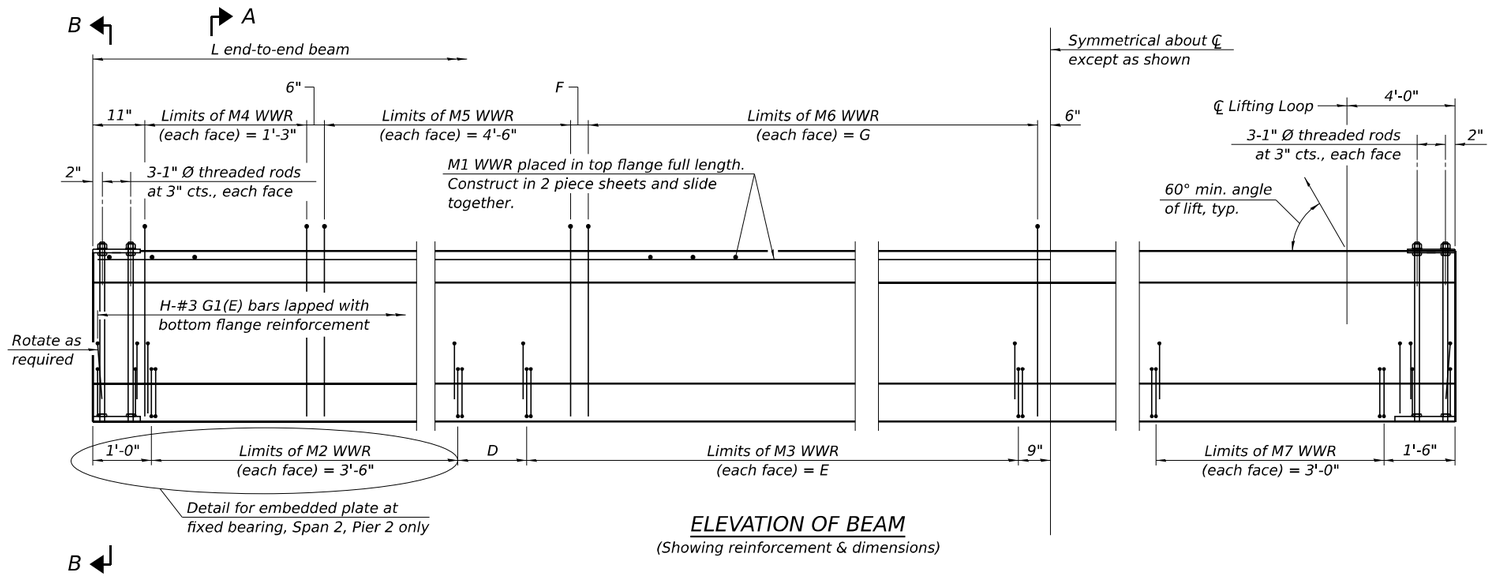

ELEVATION OF BEAM
(Showing reinforcement & dimensions)

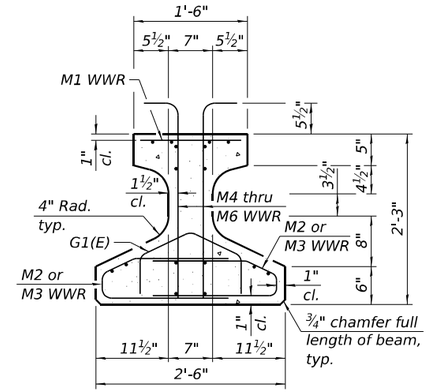

SECTION A-A

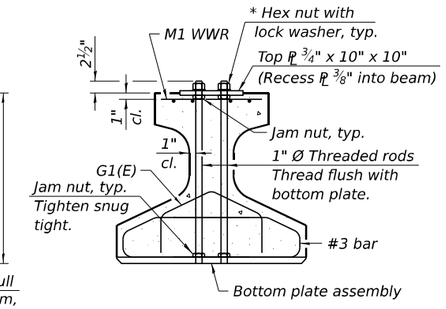

SECTION B-B
* Only tighten sufficiently to compress lock washers

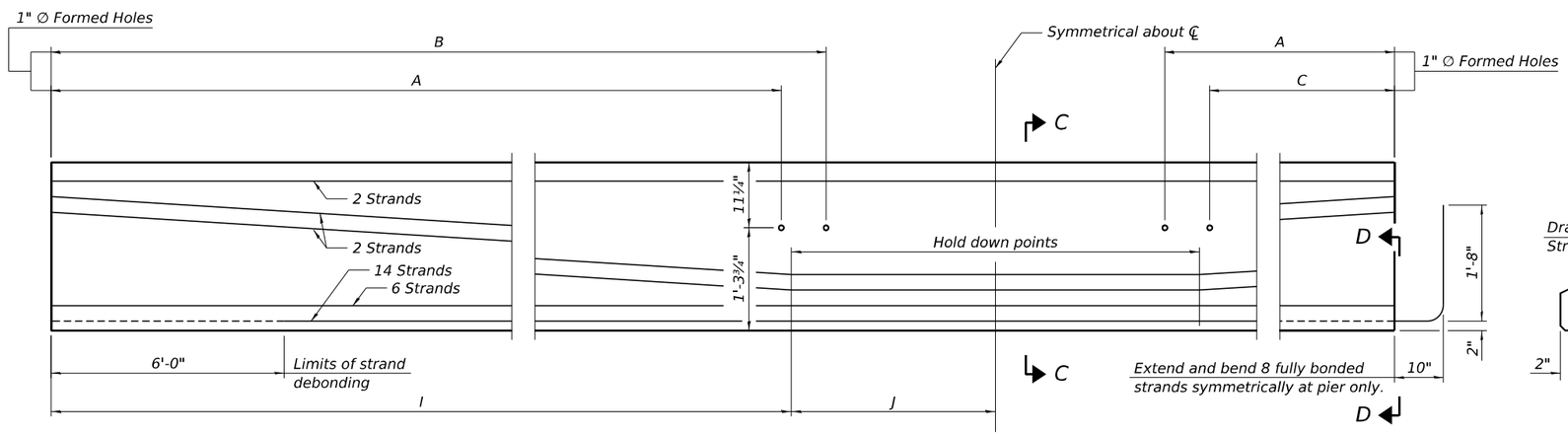

ELEVATION OF BEAM
(Showing prestressing steel)

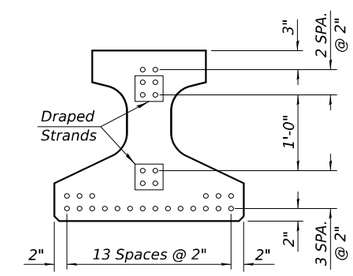

SECTION C-C
(26-0.6" Ø 270 ksi strands)

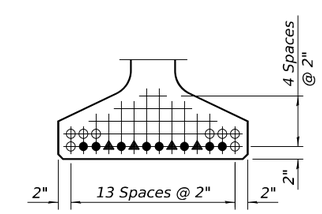

VIEW D-D

- ○ Fully bonded strand
- ▲ Partially debonded strand
- ● Extended and bend strand (at pier only) (fully bonded)

BEAM DIMENSIONS

Span	Beam	L	A	B	C	D	E	F	G	H	I	J
2	1-14	61'-10"	20'-7⅜"	-	-	1'-8"	24'-0"	3"	23'-0"	68	24'-8¾"	6'-2¼"
6	8	41'-7⅝"	-	15'-0"	11'-7½"	6¾"	15'-0"	1¾"	13'-0"	54	16'-7⅞"	4'-2"
6	9	45'-0⅛"	15'-0"	16'-1⅛"	12'-9"	9"	16'-6"	10"	14'-0"	56	18'-0"	4'-6"
6	10	48'-4¾"	16'-1⅛"	17'-3⅛"	13'-10½"	11⅜"	18'-0"	6⅜"	16'-0"	58	19'-4¼"	4'-10⅛"
6	11	51'-9¼"	17'-3⅛"	18'-4⅝"	15'-0"	1'-1⅝"	19'-6"	2⅝"	18'-0"	60	20'-8½"	5'-2⅛"
6	12	55'-1⅞"	18'-4⅝"	19'-6⅛"	16'-1⅝"	1'-4"	21'-0"	10⅞"	19'-0"	62	22'-0¾"	5'-6¼"
6	13	58'-6½"	19'-6⅛"	20'-7⅝"	17'-3⅛"	1'-6¼"	22'-6"	7¼"	21'-0"	64	23'-5"	5'-10¼"'
6	14	61'-11"	20'-7⅝"	-	-	2½"	25'-6"	3½"	23'-0"	68	24'-9¼"	6'-2¼"

Note:
See sheets S-60 and S-61 of S-80 for additional details and Bill of Material.

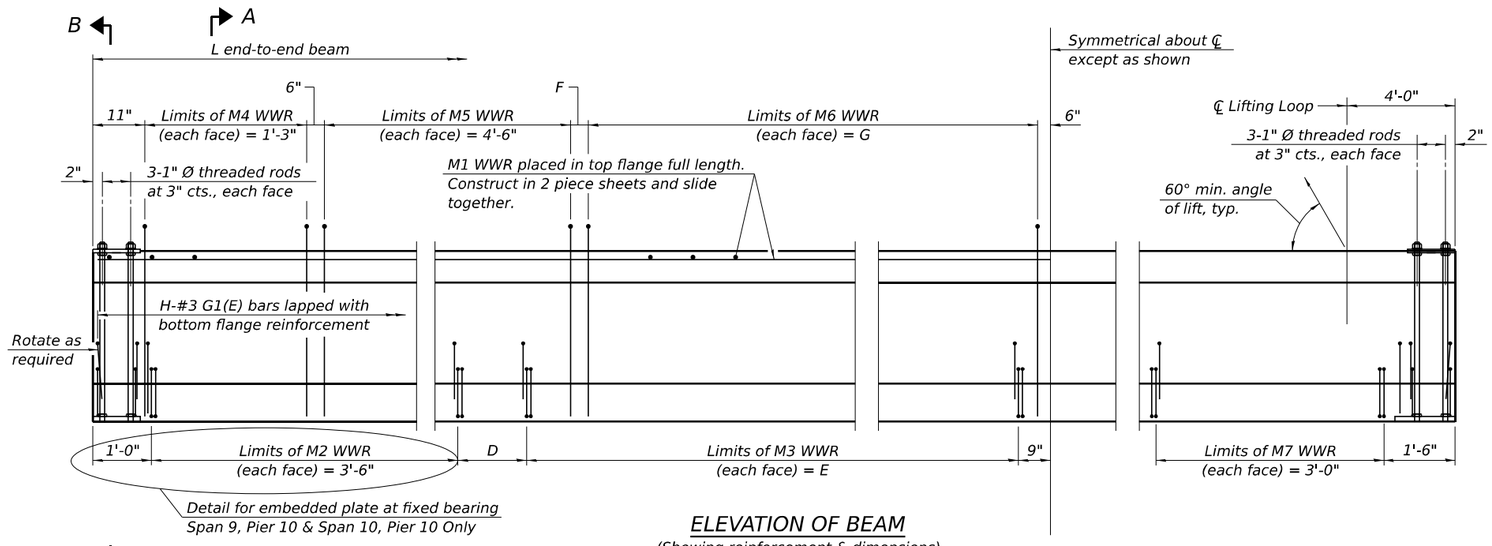

ELEVATION OF BEAM
(Showing reinforcement & dimensions)

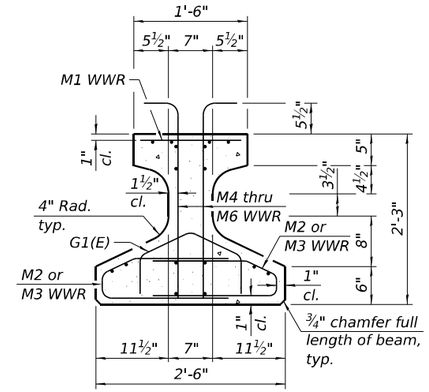

SECTION A-A

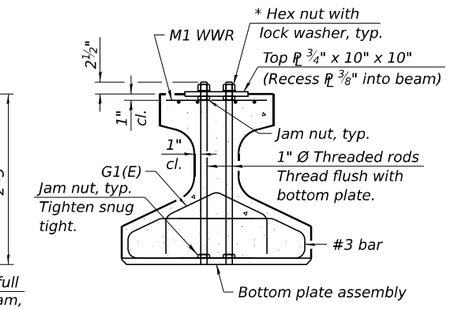

SECTION B-B
* Only tighten sufficiently to compress lock washers

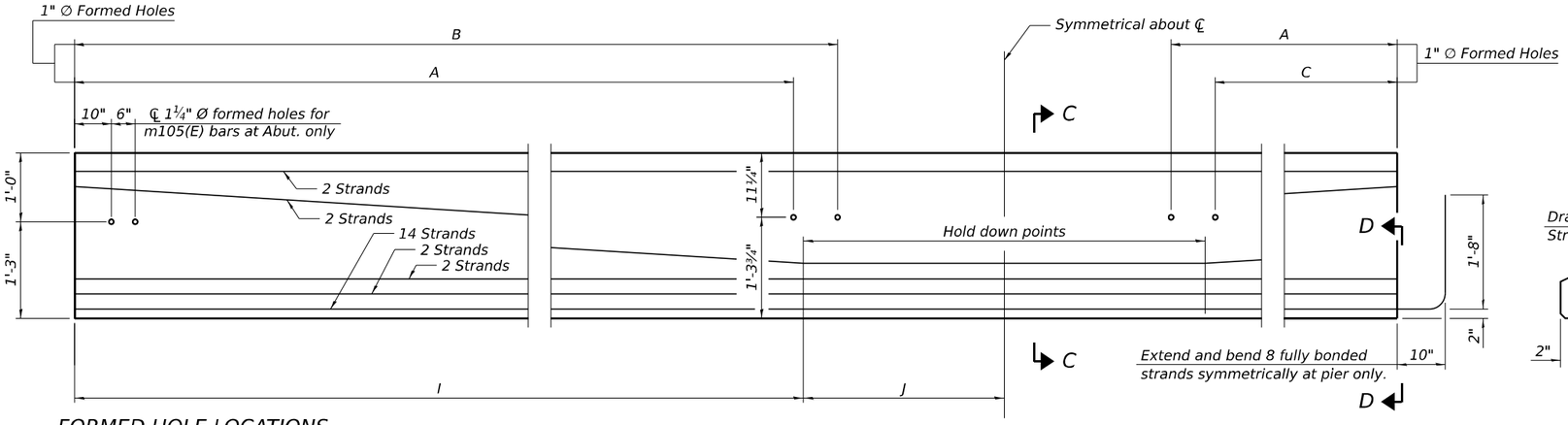

ELEVATION OF BEAM
(Showing prestressing steel)

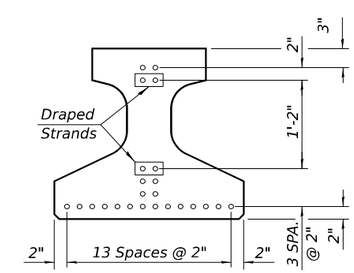

SECTION C-C
(22-0.6" Ø 270 ksi strands)

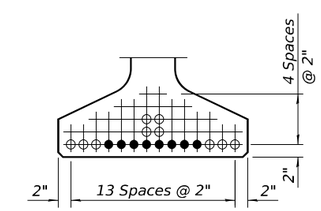

VIEW D-D

- ○ Fully bonded strand
- ▲ Partially debonded strand
- ● Extended and bend strand (at pier only) (fully bonded)

FORMED HOLE LOCATIONS

Span	Beam	A	B	C
7	2-6, 9-13	19'-3⅞"	22'-8⅜"	15'-11¼"
7	1 & 8	-	22'-8⅜"	15'-11¼"
7	7 & 14	19'-3⅞"	-	-
8	2-6, 9-13	19'-0⅜"	22'-5"	15'-7¾"
8	1 & 8	-	22'-5"	15'-7¾"
8	7 & 14	19'-0⅜"	-	-
9	2-6, 9-13	18'-2⅜"	21'-6⅞"	14'-9¾"
9	1 & 8	-	21'-6⅞"	14'-9¾"
9	7 & 14	18'-2⅜"	-	-
10	2-6, 9-13	19'-7"	22'-11⅝"	16'-2⅜"
10	1 & 8	-	22'-11⅝"	16'-2⅜"
10	7 & 14	19'-7"	-	-
11	2-6, 9-13	19'-4½"	22'-9"	15'-11⅞"
11	1 & 8	-	22'-9"	15'-11⅞"
11	7 & 14	19'-4½"	-	-

BEAM DIMENSIONS

Span	Beam	L	D	E	F	G	H	I	J
7	1-14	57'-11½"	1'-2¾"	22'-6"	3¾"	21'-0"	64	23'-2¼"	5'-9½"
8	1-14	57'-1"	9½"	22'-6"	10½"	20'-0"	64	22'-10"	5'-8½"
9	1-14	54'-7"	1'-0½"	21'-0"	7½"	19'-0"	64	21'-10"	5'-5½"
10	1-14	58'-9"	1'-7½"	22'-6"	8½"	21'-0"	66	23'-6"	5'-10½"
11	1-14	58'-1⅜"	1'-3¾"	22'-6"	4¾"	21'-0"	64	23'-3"	5'-9¾"

Note:
See sheets S-60 and S-61 of S-80 for additional details and Bill of Material.

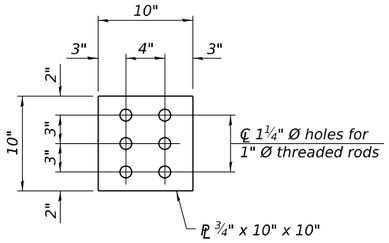

PLAN - TOP PLATE

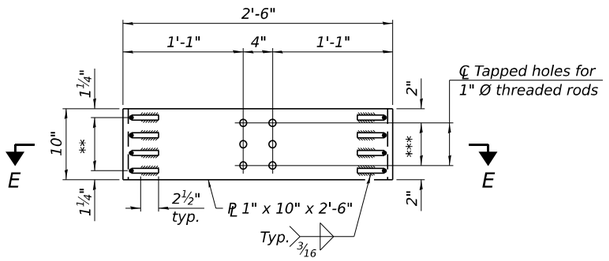

BOTTOM PLATE ASSEMBLY
AT PIERS 2 & 9

** 3 Spaces at 2½" = 7½"

*** 2 Spaces at 3" = 6"

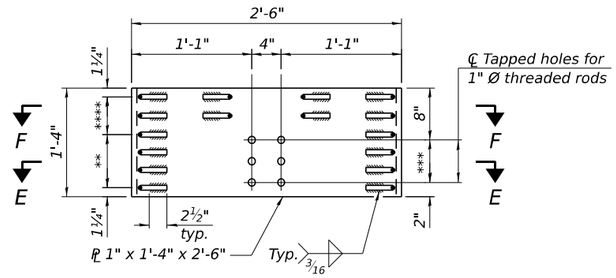

BOTTOM PLATE ASSEMBLY
AT PIER 1, 3, 4, 5, 6, 7, 8, & 10

** 3 Spaces at 2½" = 7½"

*** 2 Spaces at 3" = 6"

**** 2 Spaces at 3" = 6"

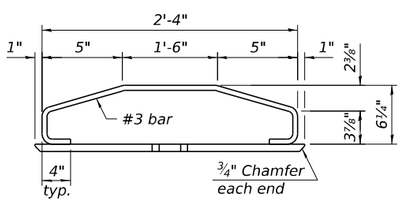

SECTION E-E

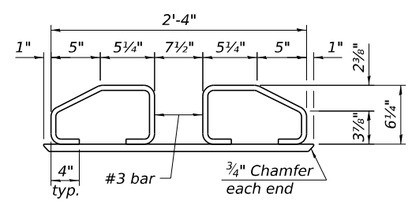

SECTION F-F

NOTES

Inserts for ¾" Ø threaded dowel rods, when specified, are to be two strut, ferrule type for interior beams and single ferrule, flared loop type for exterior beams.

Prestressing steel shall be uncoated high strength, low relaxation 7-wire strand, Grade 270. The nominal diameter for beam strands shall be 0.6" and the nominal cross-sectional area shall be 0.217 sq. in. The nominal diameter for lifting loops shall be ½" and the nominal cross sectional area shall be 0.153 sq. in.

The beams shall have a final concrete compressive strength, f'c, of 8500 psi and a release concrete compressive strength, f'ci, of 6500 psi.

A minimum 2½" Ø lifting pin shall be used to engage the lifting loops during handling.

Bend the extended strands inward on the fascia beams to maintain 1½" clearance inside the pier diaphragm.

The top and bottom plates shall be AASHTO M270 Grade 50.

The top plates and bottom plate assemblies shall be galvanized according to AASHTO M111. The threaded rods, nuts and washers shall be galvanized according to AASHTO M232.

Threaded rods shall be ASTM F 1554 Grade 55.

Welded Wire Reinforcement (WWR) shall conform to ASTM A884 with a Class A, Type 1 epoxy coating or ASTM A1060, Table 3 galvanized coating.

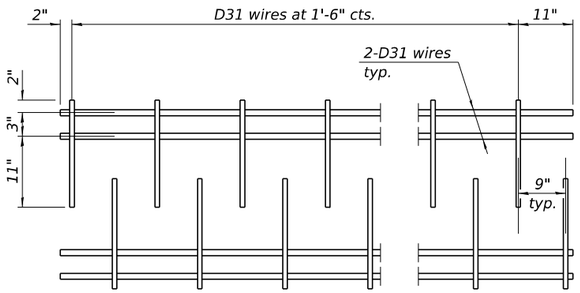

M1 WWR DETAIL

When multiple sheets of M1 WWR are required along the beam length, #5(E) bars (5'-0" long) shall be used to splice the longitudinal D31 wires together (Min. Lap 2'-4").

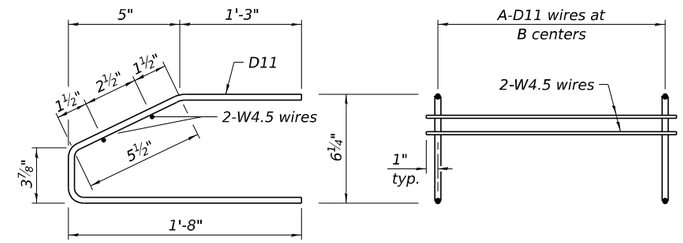

M2 AND M3 WWR DETAIL

(See Table of Dimensions)

BILL OF MATERIAL

Item	Unit	Total
Furnishing and Erecting Precast Prestressed Concrete Beams, IL27N	Ft.	8,097

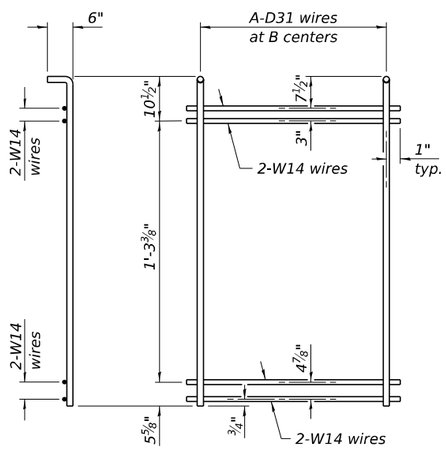

M4 THRU M6 WWR DETAIL

(See Table of Dimensions)

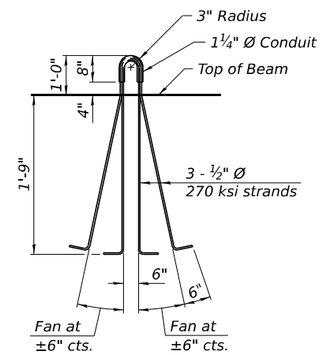

LIFTING LOOP DETAIL

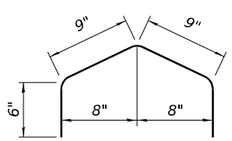

BAR G1(E)

TABLE OF DIMENSIONS

(The WWR designs assume grade 60. If necessary, this permits the fabricator to directly substitute grade 60 rebar as detailed in the Manual for Fabrication of Precast Prestressed Concrete Products.)

SPANS 1-11

WWR	A	B
M2	15	3"
M4	6	3"
M5	10	6"
M7	13	3"

SPANS 1-5 - M3

SPAN	A	B
1	13	1'-6"
2	17	1'-6"
3	13	1'-6"
4	13	1'-6"
5	13	1'-6"

SPANS 7-11 - M3

SPAN	A	B
7	16	1'-6"
8	16	1'-6"
9	15	1'-6"
10	16	1'-6"
11	16	1'-6"

SPAN 6 - M3

BEAM	A	B
1	3	1'-6"
2	4	1'-6"
3	5	1'-6"
4	6	1'-6"
5	7	1'-6"
6	9	1'-6"
7	10	1'-6"
8	11	1'-6"
9	12	1'-6"
10	13	1'-6"
11	14	1'-6"
12	15	1'-6"
13	16	1'-6"
14	18	1'-6"

SPANS 1-5 - M6

SPAN	A	B
1	17	1'-0"
2	24	1'-0"
3	16	1'-0"
4	16	1'-0"
5	16	1'-0"

SPANS 7-11 - M6

SPAN	A	B
7	22	1'-0"
8	21	1'-0"
9	20	1'-0"
10	22	1'-0"
11	22	1'-0"

SPAN 6 - M6

BEAM	A	B
1	2	1'-0"
2	4	1'-0"
3	5	1'-0"
4	7	1'-0"
5	9	1'-0"
6	10	1'-0"
7	12	1'-0"
8	14	1'-0"
9	15	1'-0"
10	17	1'-0"
11	19	1'-0"
12	20	1'-0"
13	22	1'-0"
14	24	1'-0"

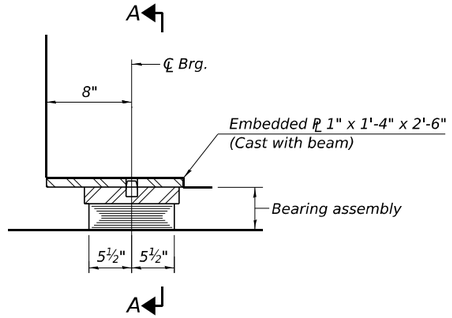

ELEVATION AT N. & S. ABUT., PIER 1, 3, 4, 5, 7, 8, 10, & SB SPAN 6 AT PIER 6

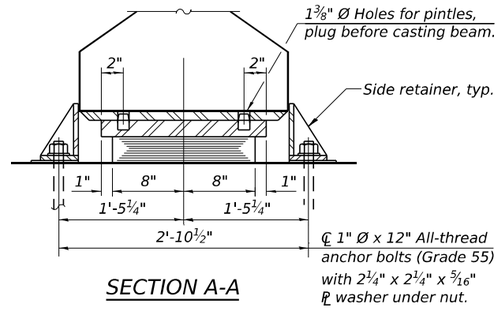

SECTION A-A

TYPE I ELASTOMERIC EXP. BRG.

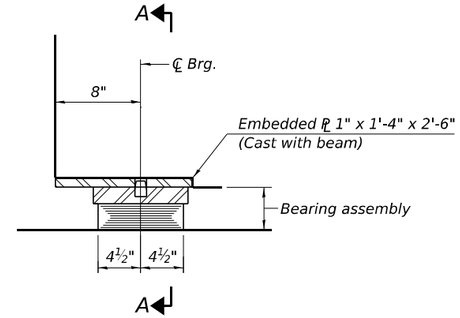

ELEVATION AT PIER 6

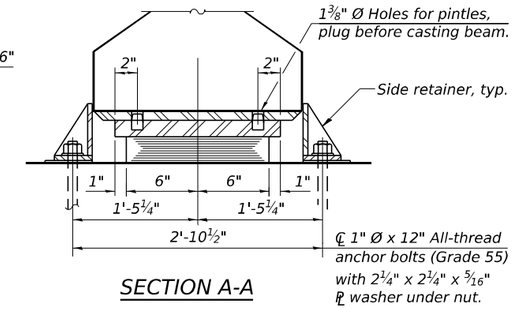

SECTION A-A

TYPE I ELASTOMERIC EXP. BRG. FOR NB SPAN 6 AT PIER 6

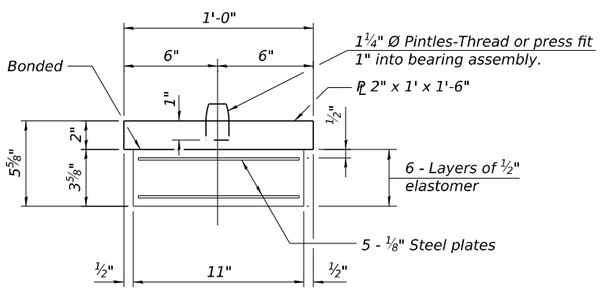

BEARING ASSEMBLY

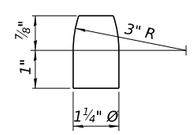

PINTLE

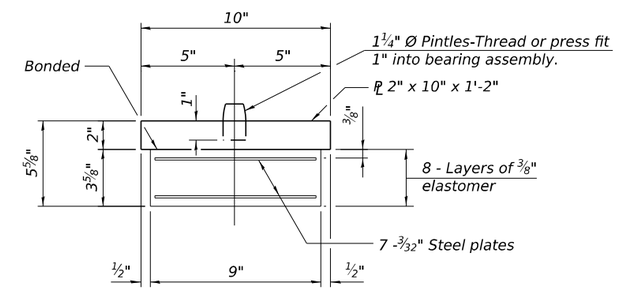

BEARING ASSEMBLY FOR NB SPAN 6 AT PIER 6

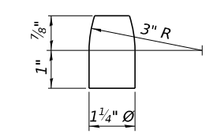

PINTLE

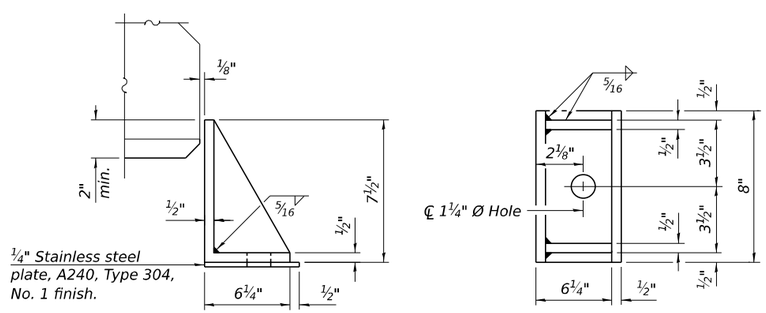

SIDE RETAINER

Equivalent rolled angle with stiffeners will be allowed in lieu of welded plates.

Notes:

Side retainers and stainless steel plates shall be included in the cost of Elastomeric Bearing Assembly, Type I.

See sheet S-60 of S-80 for additional details of embedded plate.

Anchor bolts and side retainers at all supports shall be installed as each member is erected unless an equivalent temporary means of lateral restraint is used.

All exposed bearing plates and side retainers shall be hot dip galvanized according to AASHTO M111.

The structural steel plates of the Bearing Assembly shall conform to the requirements of AASHTO M270 Grade 50 (AASHTO M270 Grade 50W.)

The anchor bolt sizes and grades shown constitute a calculated seismic structural fuse. Substitution of higher diameter and/or grade anchor bolts will not be allowed.

BILL OF MATERIAL

Item	Unit	Total
Elastomeric Bearing Assembly, Type I	Each	238
Anchor Bolts, 1"	Each	476

PI-2E-1

5-15-2023

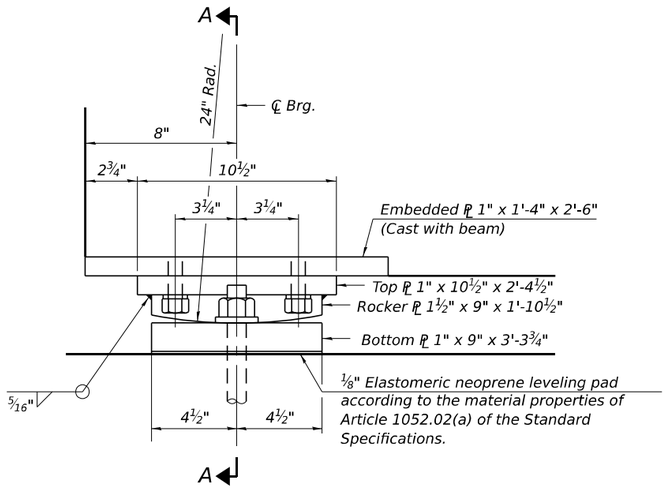

ELEVATION AT PIER 5

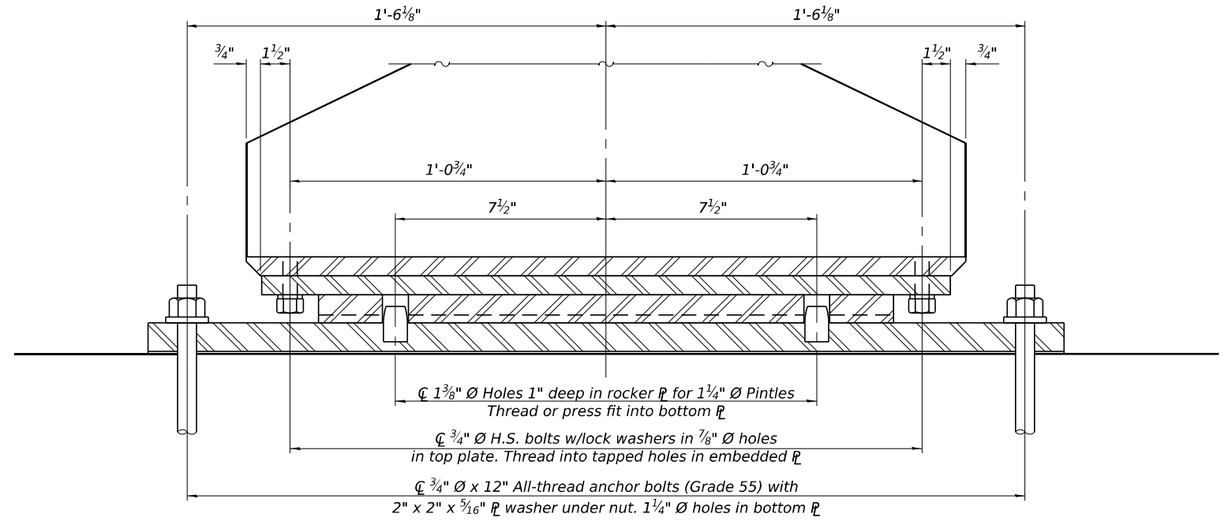

SECTION A-A

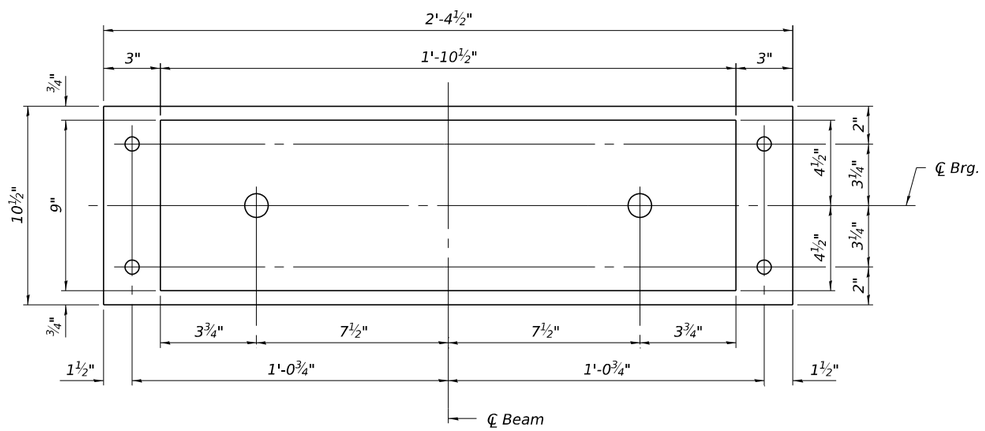

PLAN OF TOP PLATE & ROCKER PLATE

(Looking from below at top plate and rocker plate only)

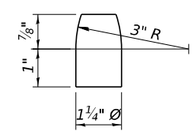

PINTLE

Notes:

Anchor bolts shall be installed as each member is erected unless an equivalent temporary means of lateral restraint is used.

See sheet S-60 of S-80 for additional details of embedded plate.

All plates, hardware, and leveling pads required for the bearing, except anchor bolts, shall be included in the cost of Furnishing and Erecting Precast Prestressed Concrete IL27N Beams.

All plate material for bearings shall be hot dip galvanized according to AASHTO M111.

The structural steel plates of the Bearing Assembly shall conform to the requirements of AASHTO M270 Grade 50 (AASHTO M270 Grade 50W.)

H.S. bolts in bearing assembly shall be galvanized according to ASTM B 695 Class 50.

Anchor bolts and washers shall be galvanized according to AASHTO M232.

The anchor bolt sizes and grades shown constitute a calculated seismic structural fuse. Substitution of higher diameter and/or grade anchor bolts will not be allowed.

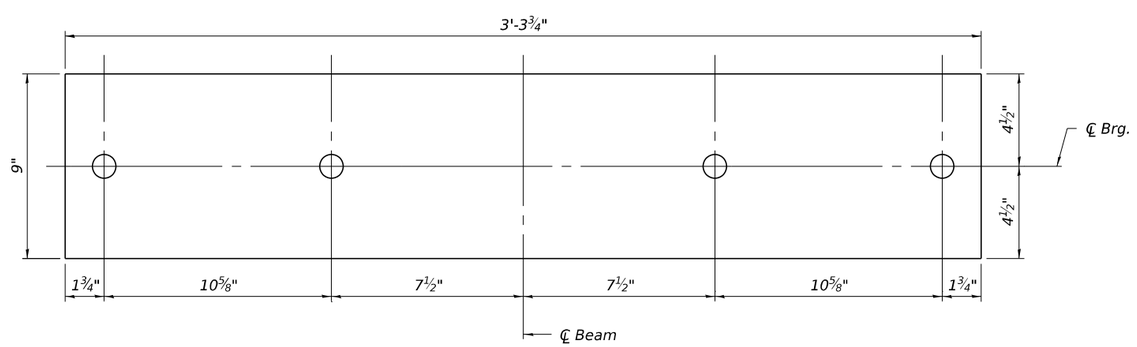

PLAN OF BOTTOM PLATE

BILL OF MATERIAL

Item	Unit	Total
Anchor Bolts, 3/4"	Each	28

PI-2FB

5-15-2023

MODEL: Sheet View
FILE NAME: pw://hq-pwint01.a-e.transyscorp.com:transyscorp-pw1/Documents/Projects_2020/CH401/401200165/Bridge/304.02 - Sheet Files/06000202-D876N65-065-FIXED BEARING ASSEMBLY

TRANSYSTEMS

USER NAME = mbmcwhorter	DESIGNED - RMJ	REVISED -	
	CHECKED - IIP	REVISED -	
PLOT SCALE =	DRAWN - RMJ	REVISED -	
PLOT DATE = 11/13/2025	CHECKED - IIP	REVISED -	

STATE OF ILLINOIS
DEPARTMENT OF TRANSPORTATION

FIXED BEARING ASSEMBLY
STRUCTURE NO. 060-0202

SHEET S-63 OF S-80 SHEETS

F.A.P. RTE.	SECTION	COUNTY	TOTAL SHEETS	SHEET NO.
0002	(103,104)BR-1	MADISON	178	142
		CONTRACT NO. 76N65		
	ILLINOIS	FED. AID PROJECT		

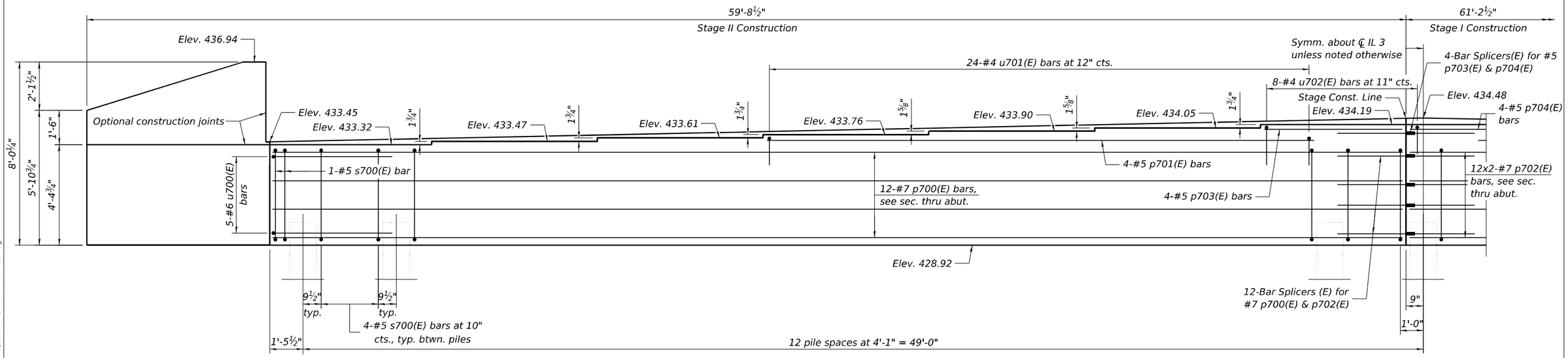

ELEVATION

(Looking North)
(Southbound shown, Northbound simillar)

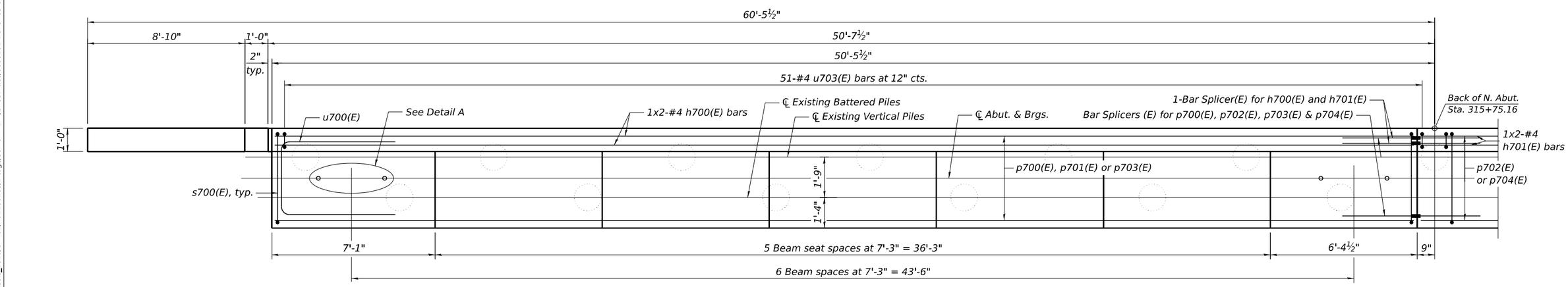

PLAN

Notes:
See Sheet S-67 of S-80 for details of wingwall reinforcement.
See Sheet S-68 of S-80 for section thru abut, bar details, Detail A and Bill of Material.

MODEL: Default
FILE NAME: pw://hq-pwint01.a-e.transyscorp.com:transyscorp-pw1/Documents/Projects_2020/CH401/401200165/Bridge/304.04 - EFK/Sheet Files/0600202-D876N65-065-ABUTMENT PLAN, ELEVATION AND DETAILS 1.dgn

EFK•Moen
Civil Engineering Design

USER NAME = mbmcwhorter	DESIGNED - KRH	REVISED -	
	CHECKED - ACB	REVISED -	
PLOT SCALE =	DRAWN - KRH	REVISED -	
PLOT DATE = 11/13/2025	CHECKED - ACB	REVISED -	

STATE OF ILLINOIS
DEPARTMENT OF TRANSPORTATION

NORTH ABUTMENT PLAN AND ELEVATION
STRUCTURE NO. 060-0202

SHEET S-64 OF S-80 SHEETS

F.A.P. RTE.	SECTION	COUNTY	TOTAL SHEETS	SHEET NO.
0002	(103,104)BR-1	MADISON	178	143
		CONTRACT NO. 76N65		
		ILLINOIS	FED. AID PROJECT	

11/13/2025 9:59:46 AM

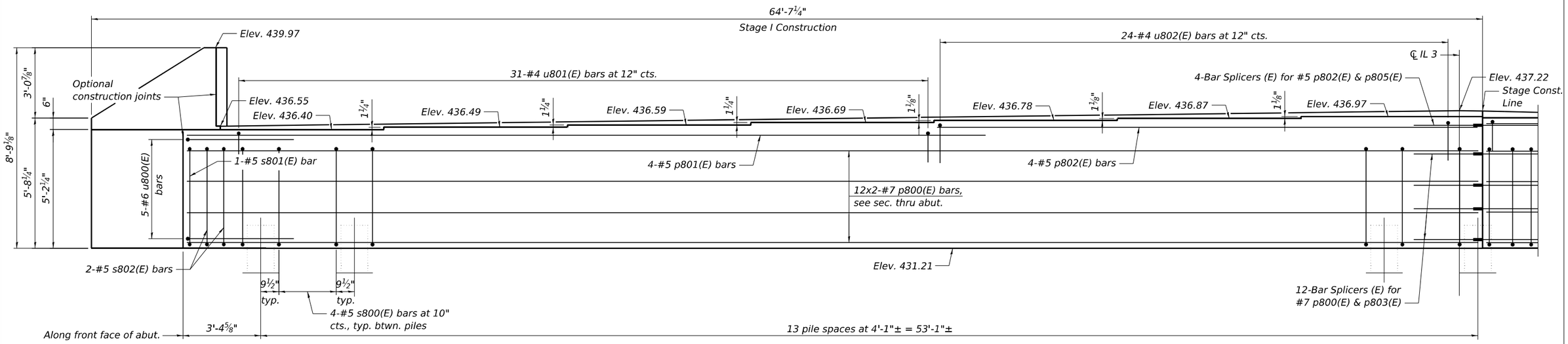

ELEVATION

(Looking South)

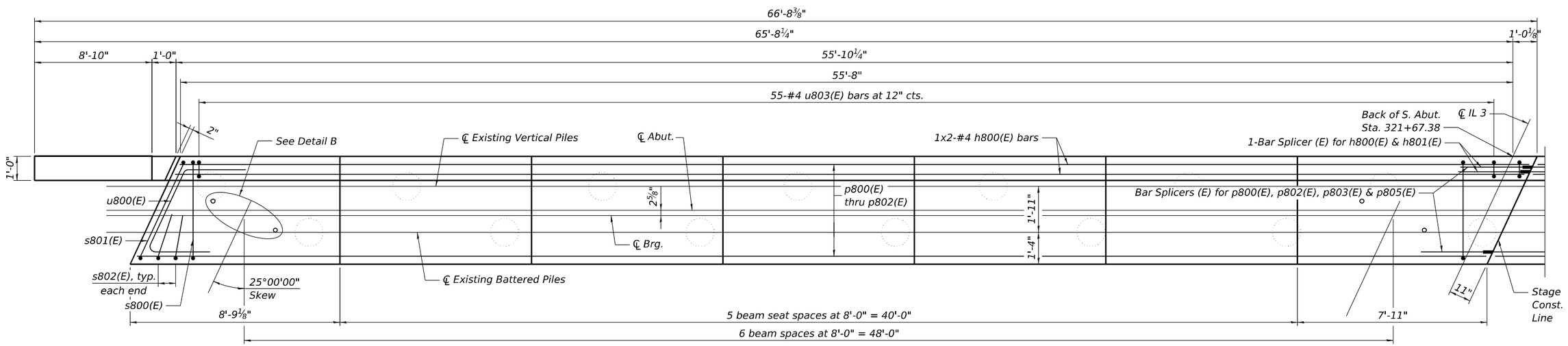

PLAN

Notes:
See Sheet S-67 of S-80 for details of wingwall reinforcement.
See Sheet S-68 of S-80 for section thru abut, bar details, Detail B and Bill of Material.
Cut p802(E) bars to fit skew.

MODEL: Default
FILE NAME: pw://hq-pwinh01.a-e.transyscorp.com:transyscorp-pw1/Documents/Projects_2020/CH401/401200165/Bridge/304.04 - EFK/Sheet Files/06000202-0876N65-066-ABUTMENT PLAN, ELEVATION AND DETAILS 2.dgn

EFK•Moen
Civil Engineering Design

USER NAME = mbmcwhorter	DESIGNED - KRH	REVISED -	
	CHECKED - ACB	REVISED -	
PLOT SCALE =	DRAWN - KRH	REVISED -	
PLOT DATE = 11/13/2025	CHECKED - ACB	REVISED -	

STATE OF ILLINOIS
DEPARTMENT OF TRANSPORTATION

SOUTH ABUTMENT PLAN AND ELEVATION 1
STRUCTURE NO. 060-0202

SHEET S-65 OF S-80 SHEETS

F.A.P. RTE.	SECTION	COUNTY	TOTAL SHEETS	SHEET NO.
0002	(103,104)BR-1	MADISON	178	144
		CONTRACT NO. 76N65		
	ILLINOIS	FED. AID PROJECT		

11/13/2025 9:59:48 AM

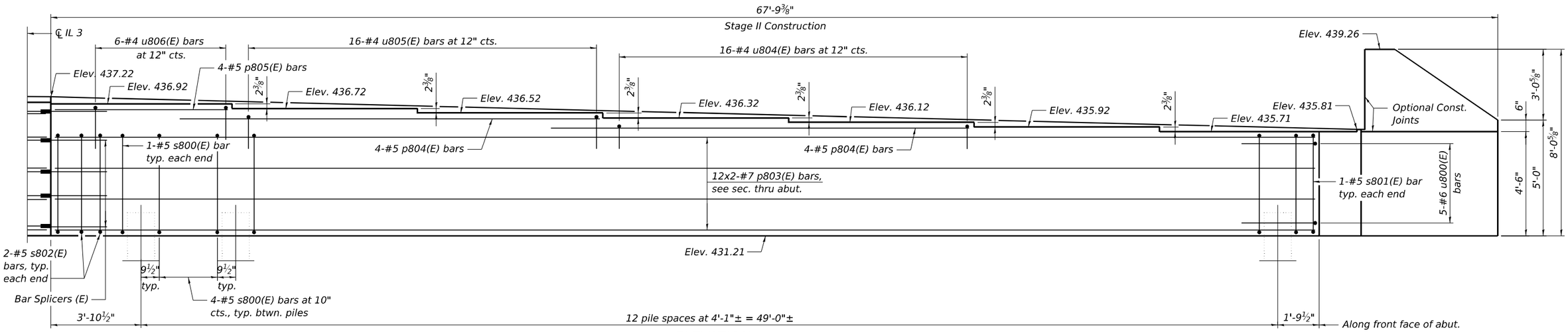

ELEVATION

(Looking South)

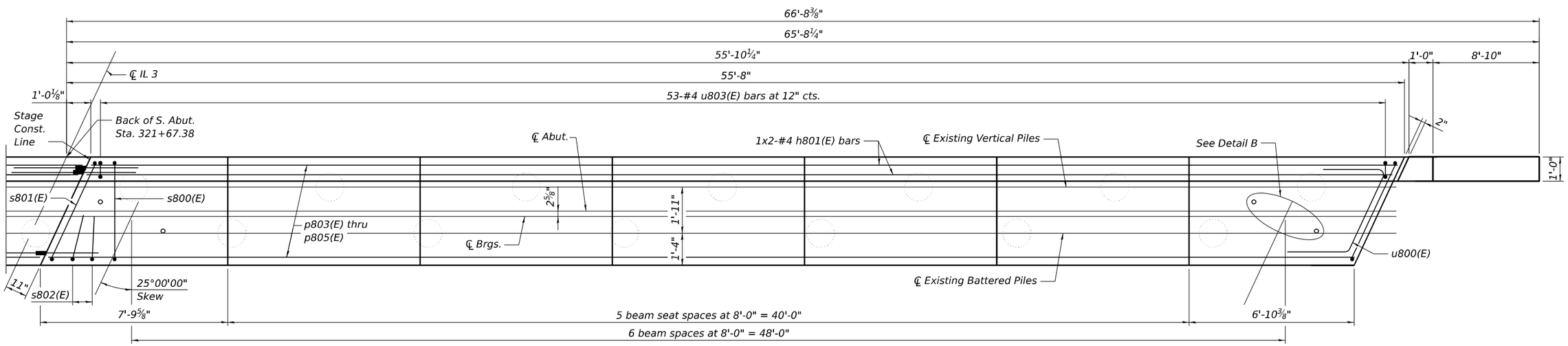

PLAN

Notes:
See Sheet S-67 of S-80 for details of wingwall reinforcement.
See Sheet S-68 of S-80 for section thru abut, bar details, Detail B and Bill of Material.
Cut p805(E) bars to fit skew.

MODEL: Default
FILE NAME: pw://hq-pwinf01.a-e.transyscorp.com:transyscorp-pw1/Documents/Projects_2020/CH401/401200165/Bridge/304.04 - EFK/Sheet Files/06000202-0876N65-067-ABUTMENT PLAN, ELEVATION AND DETAILS 3.dgn

EFK•Moen
Civil Engineering Design

USER NAME = mbmcwhorter	DESIGNED - KRH	REVISED -	
	CHECKED - ACB	REVISED -	
PLOT SCALE =	DRAWN - KRH	REVISED -	
PLOT DATE = 11/13/2025	CHECKED - ACB	REVISED -	

STATE OF ILLINOIS
DEPARTMENT OF TRANSPORTATION

SOUTH ABUTMENT PLAN AND ELEVATION 2
STRUCTURE NO. 060-0202

SHEET S-66 OF S-80 SHEETS

F.A.P. RTE.	SECTION	COUNTY	TOTAL SHEETS	SHEET NO.
0002	(103,104)BR-1	MADISON	178	145
		CONTRACT NO. 76N65		
	ILLINOIS	FED. AID PROJECT		

11/13/2025 9:59:49 AM

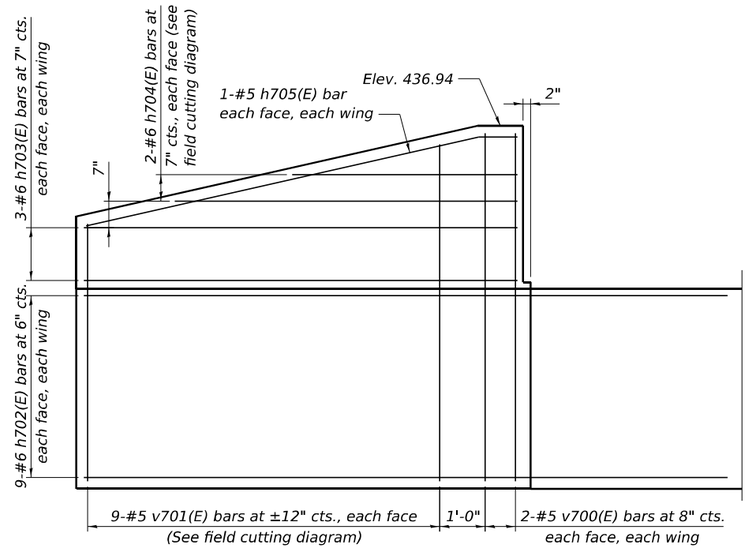

WINGWALL ELEVATION (N. ABUT.)

(West wingwall shown, East wingwall similar)

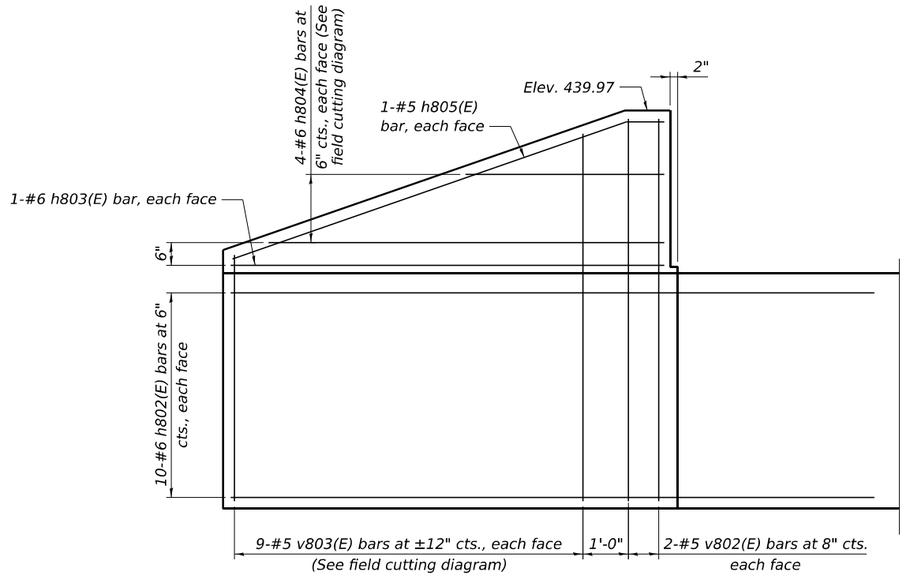

WINGWALL ELEVATION (S. ABUT.)

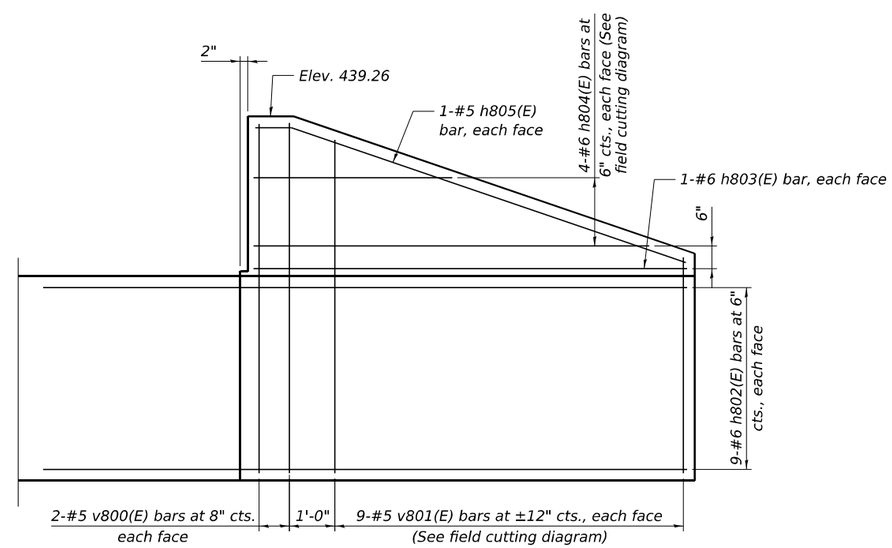

WINGWALL ELEVATION (S. ABUT.)

See Sheet S-68 of S-80 for Bill of Material and bar details.

MODEL: Default
FILE NAME: pw://hq-pwint01.a-e.transyscorp.com:transyscorp-pw1/Documents/Projects_2020/CH401/401200165/Bridge/304.04 - EFK/Sheet Files/06000202-D876N65-068-ABUTMENT PLAN, ELEVATION AND DETAILS 4.dgn

11/13/2025 9:59:50 AM

EFK•Moen
Civil Engineering Design

USER NAME = mbmcwhorter	DESIGNED - KRH	REVISED -	
	CHECKED - ACB	REVISED -	
PLOT SCALE =	DRAWN - KRH	REVISED -	
PLOT DATE = 11/13/2025	CHECKED - ACB	REVISED -	

STATE OF ILLINOIS
DEPARTMENT OF TRANSPORTATION

ABUTMENT DETAILS 1
STRUCTURE NO. 060-0202

SHEET S-67 OF S-80 SHEETS

F.A.P. RTE.	SECTION	COUNTY	TOTAL SHEETS	SHEET NO.
0002	(103,104)BR-1	MADISON	178	146
		CONTRACT NO. 76N65		
	ILLINOIS	FED. AID PROJECT		

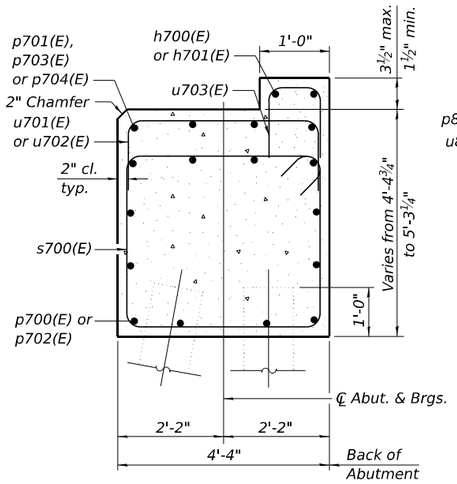

SEC. THRU N. ABUT.

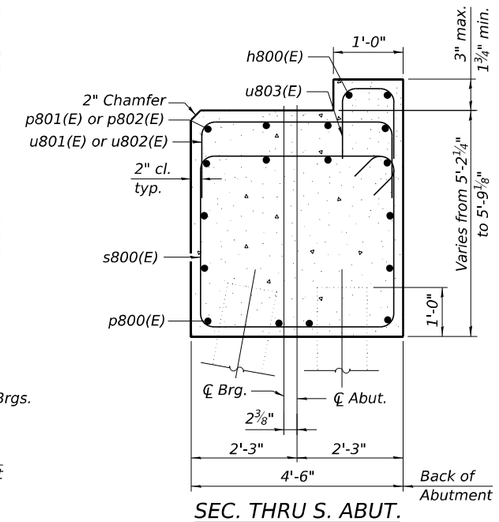

SEC. THRU S. ABUT.

(Stage 1 Construction)
Dimensions at right angles to abutment.

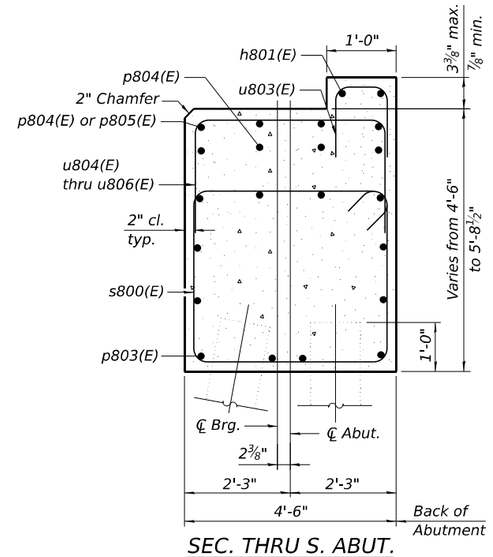

SEC. THRU S. ABUT.

(Stage 2 Construction)
Dimensions at right angles to abutment.

BILL OF MATERIAL (N. ABUT.)

Bar	No.	Size	Length	Shape
h700(E)	4	#4	26'-0"	
h701(E)	4	#4	26'-9"	
h702(E)	36	#6	14'-2"	
h703(E)	12	#6	9'-6"	
h704(E)	4	#6	12'-5"	
h705(E)	4	#5	9'-8"	
p700(E)	12	#7	49'-4"	
p701(E)	8	#5	23'-10"	
p702(E)	24	#7	27'-6"	
p703(E)	4	#5	6'-0"	
p704(E)	4	#5	7'-6"	
s700(E)	100	#5	16'-11"	
u700(E)	10	#6	12'-8"	
u701(E)	48	#4	6'-2"	
u702(E)	16	#4	7'-0"	
u703(E)	102	#4	2'-2"	
v700(E)	8	#5	7'-8"	
v701(E)	18	#5	13'-1"	
Structure Excavation			Cu. Yd.	291
Concrete Structures			Cu. Yd.	84.4
Reinforcement Bars, Epoxy Coated			Pound	6,690

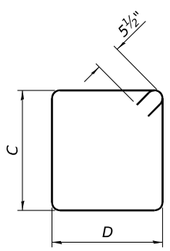

Bar	"C"	"D"
s700(E)	4'-0"	4'-0"

Bar	"C"	"D"
s800(E)	4'-2"	4'-2"
s801(E)	4'-2"	4'-7"

BAR s700(E), s800(E) & s801(E)

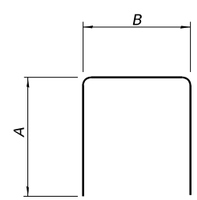

Bar	"A"	"B"
u700(E)	4'-4"	4'-0"
u701(E)	1'-1"	4'-0"
u702(E)	1'-6"	4'-0"
u703(E)	9"	8"

Bar	"A"	"B"
s802(E)	2'-0"	4'-2"
u801(E)	1'-2"	4'-2"
u802(E)	1'-7"	4'-2"
u803(E)	9"	8"
u804(E)	11"	4'-2"
u805(E)	1'-4"	4'-2"
u806(E)	1'-9"	4'-2"

BAR s802(E), u700(E), u701(E), u702(E), u703(E), u801(E), u802(E), u803(E), u804(E), u805(E) & u806(E)

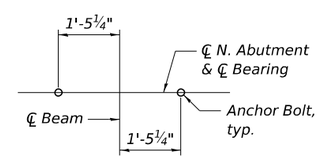

DETAIL A

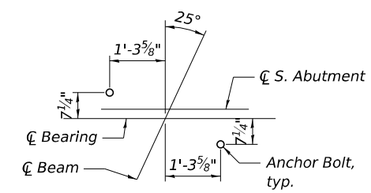

DETAIL B

BILL OF MATERIAL (S. ABUT.)

Bar	No.	Size	Length	Shape
h800(E)	4	#4	29'-5"	
h801(E)	4	#4	28'-6"	
h802(E)	38	#6	14'-2"	
h803(E)	4	#6	9'-6"	
h804(E)	8	#6	13'-0"	
h805(E)	4	#5	10'-0"	
p800(E)	24	#7	30'-2"	
p801(E)	4	#5	34'-8"	
p802(E)	4	#5	25'-6"	
p803(E)	24	#7	29'-3"	
p804(E)	8	#5	18'-1"	
p805(E)	4	#5	7'-3"	
s800(E)	103	#5	17'-7"	
s801(E)	3	#5	18'-5"	
s802(E)	8	#5	8'-2"	
u800(E)	10	#6	13'-3"	
u801(E)	31	#4	6'-6"	
u802(E)	24	#4	7'-4"	
u803(E)	108	#4	2'-2"	
u804(E)	16	#4	6'-0"	
u805(E)	16	#4	6'-10"	
u806(E)	6	#4	7'-8"	
v800(E)	4	#5	7'-8"	
v801(E)	9	#5	12'-1"	
v802(E)	4	#5	8'-5"	
v803(E)	9	#5	13'-6"	
Structure Excavation			Cu. Yd.	342
Concrete Structures			Cu. Yd.	104.3
Reinforcement Bars, Epoxy Coated			Pound	7,660

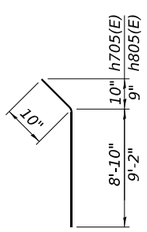

BAR h705(E) & h805(E)

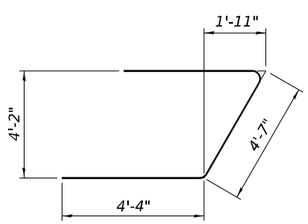

BAR u800(E)

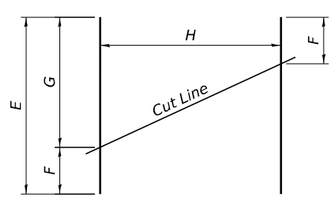

Bar	"E"	"F"	"G"	"H"
h704(E)	12'-5"	4'-11"	7'-6"	2-#6 h704(E) bars
v701(E)	13'-1"	5'-8"	7'-5"	9-#5 v701(E) bars

Bar	"E"	"F"	"G"	"H"
h804(E)	13'-0"	4'-4"	8'-8"	4-#6 h804(E) bars
v801(E)	12'-1"	4'-9"	7'-4"	9-#5 v801(E) bars
v803(E)	13'-6"	5'-5"	8'-1"	9-#5 v803(E) bars

FIELD CUTTING DIAGRAM

Order h704(E), h804(E), v701(E), v801(E), and v803(E) full length. Cut as shown and use remainder of bars in opposite wing.

Notes:
Pour steps monolithically with cap.
Bar terminators, paid for separately.
See Total Bill of Material.

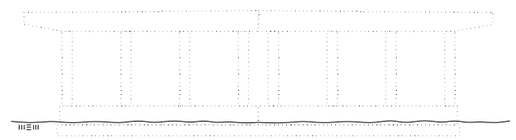

PIER 1 NORTH ELEVATION

(Looking South)

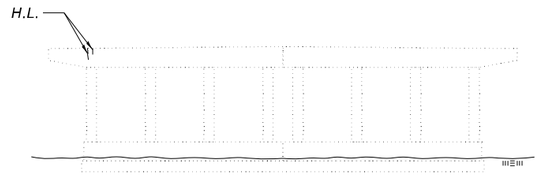

PIER 1 SOUTH ELEVATION

(Looking North)

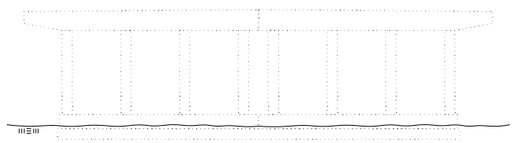

PIER 2 NORTH ELEVATION

(Looking South)

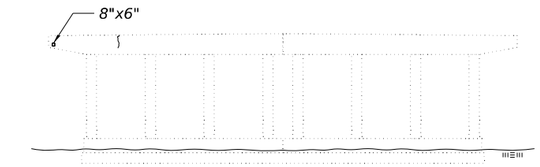

PIER 2 SOUTH ELEVATION

(Looking South)

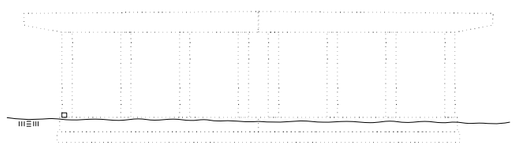

PIER 3 NORTH ELEVATION

(Looking South)

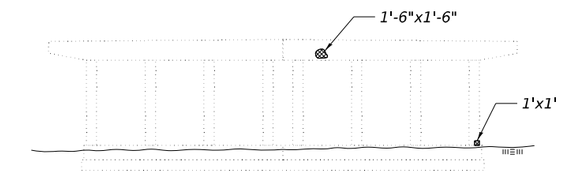

PIER 3 SOUTH ELEVATION

(Looking North)

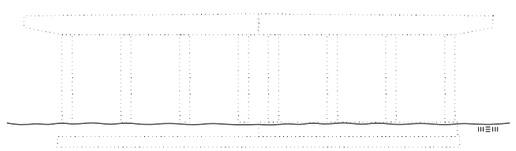

PIER 4 NORTH ELEVATION

(Looking South)

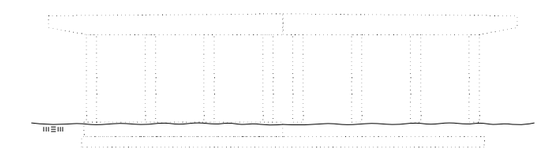

PIER 4 SOUTH ELEVATION

(Looking North)

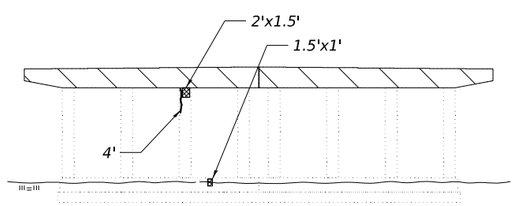

PIER 5 NORTH ELEVATION

(Looking South)

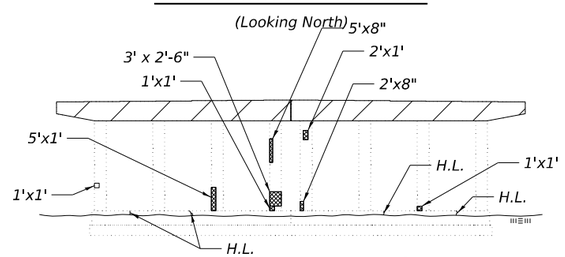

PIER 5 SOUTH ELEVATION

(Looking South)

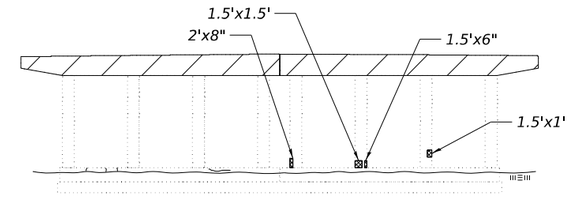

PIER 6 NORTH ELEVATION

(Looking South)

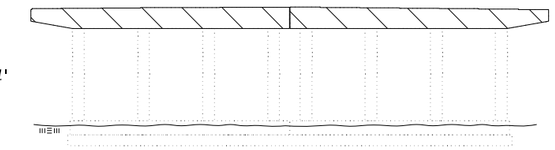

PIER 6 SOUTH ELEVATION

(Looking North)

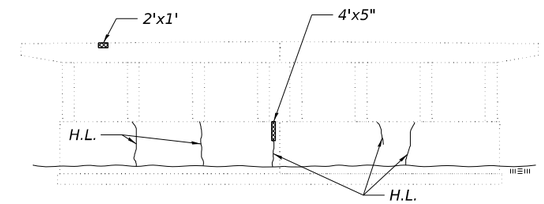

PIER 7 NORTH ELEVATION

(Looking South)

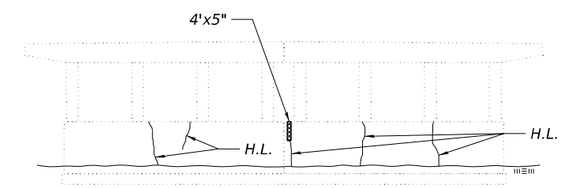

PIER 7 SOUTH ELEVATION

(Looking North)

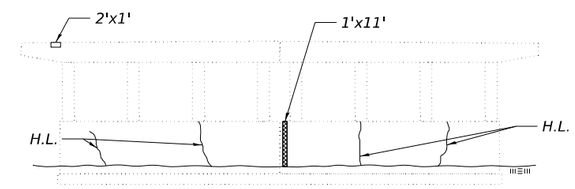

PIER 8 NORTH ELEVATION

(Looking South)

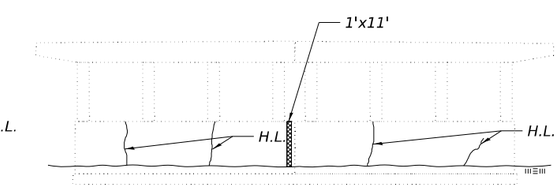

PIER 8 SOUTH ELEVATION

(Looking North)

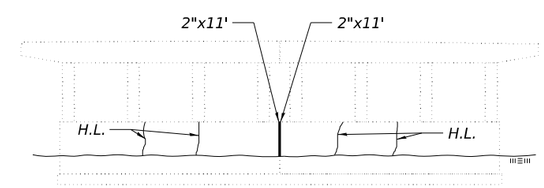

PIER 9 NORTH ELEVATION

(Looking South)

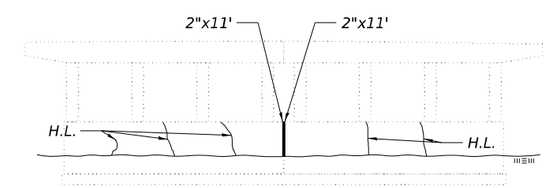

PIER 9 SOUTH ELEVATION

(Looking North)

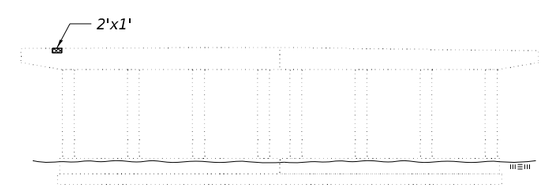

PIER 10 NORTH ELEVATION

(Looking South)

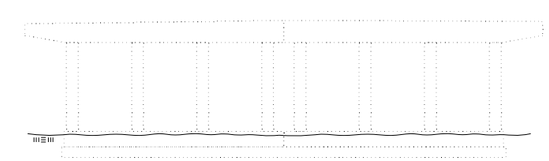

PIER 10 SOUTH ELEVATION

(Looking North)

TOTAL BILL OF MATERIAL

ITEM	UNIT	TOTAL
Epoxy Crack Injection	Foot	4
Structural Repair of Concrete (Depth Less than 5 Inches)	Sq Ft	78

LEGEND

Indicates Concrete Removal

Indicates Structural Repair of Concrete Less than 5"

4' Indicates Epoxy Crack Sealing

H.L. Indicates Hairline Crack = Not to be sealed

NOTE:

1. For Concrete Removal, see Sheet 2 of S-80.

MODEL: Sheet View
FILE NAME: pw://hq-pwint01.a-e.transyscorp.com:transyscorp-pw1/Documents/Projects_2020/CH401/401200165/Bridge/304.02 - Sheet Files/06000202-D876N65-070-PIER REMOVAL AND REPAIR DETAILS.dgn

TRANSYSTEMS

USER NAME = mbmcwhorter	DESIGNED - IS	REVISED -	
	CHECKED - IIP	REVISED -	
PLOT SCALE =	DRAWN - IS	REVISED -	
PLOT DATE = 11/13/2025	CHECKED - IIP	REVISED -	

STATE OF ILLINOIS
DEPARTMENT OF TRANSPORTATION

PIER REMOVAL AND REPAIR DETAILS
STRUCTURE NO. 060-0202

SHEET S-69 OF S-80 SHEETS

F.A.P. RTE.	SECTION	COUNTY	TOTAL SHEETS	SHEET NO.
0002	(103,104)BR-1	MADISON	178	148
		CONTRACT NO. 76N65		
		ILLINOIS	FED. AID PROJECT	

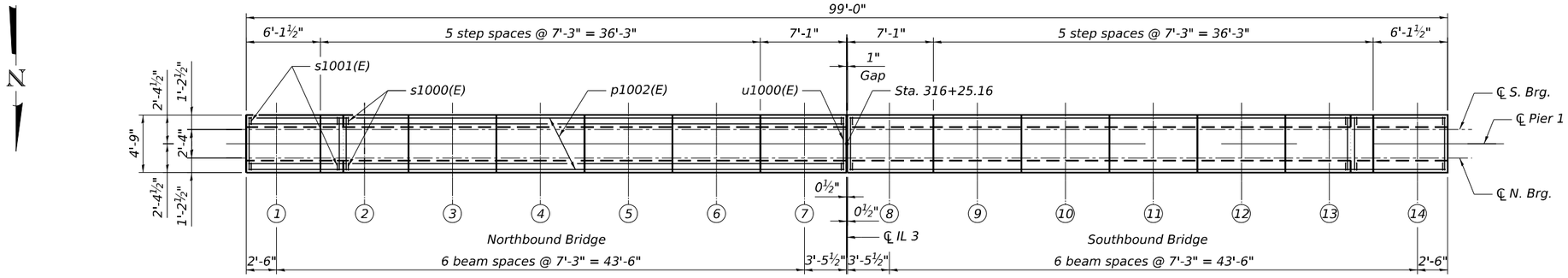

TOP PLAN

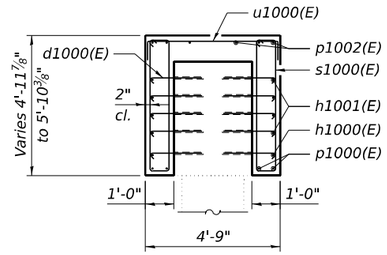

SECTION A-A

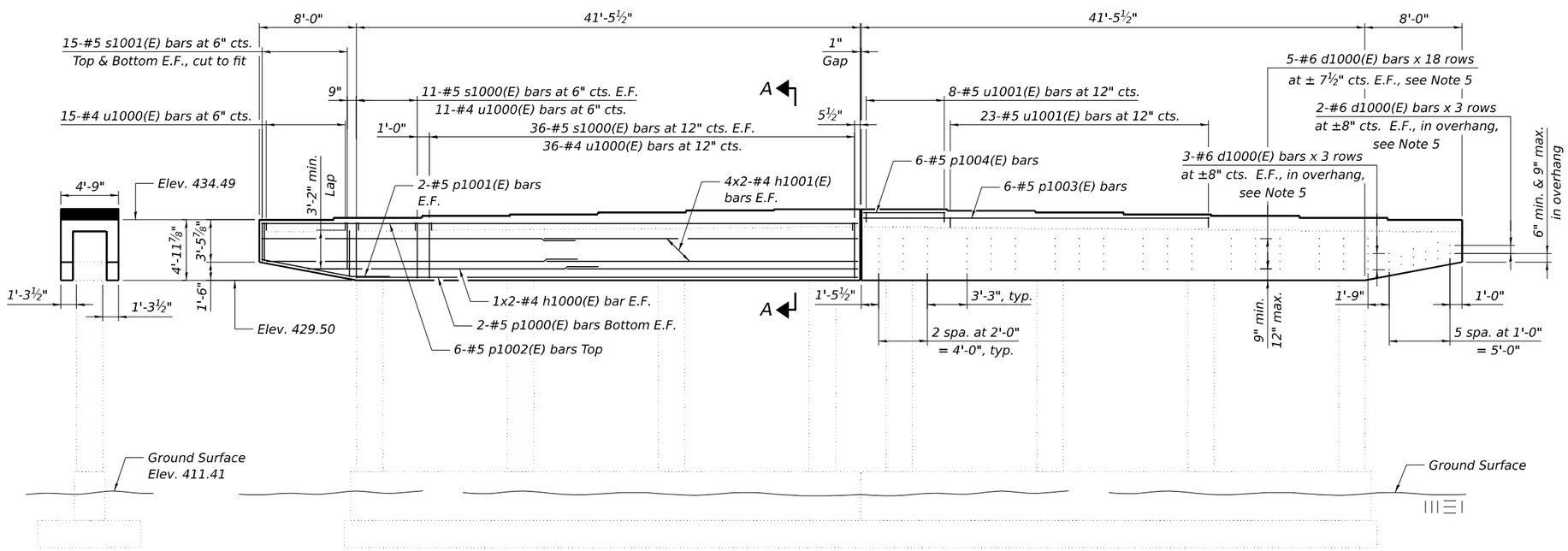

END VIEW

Northbound Pier
Longitudinal and transverse bars shown only.
Southbound Pier similar.

ELEVATION

(Looking South)

Southbound Pier
Dowels and additional seat reinforcement
shown only. Northbound Pier similar.

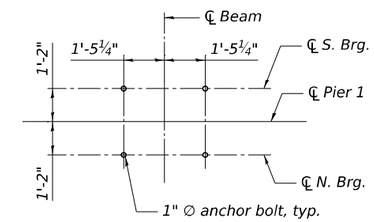

ANCHOR BOLT LAYOUT

NOTE:

1. Pour steps monolithically with cap extension.
2. E.F. = Each Face
3. d1000(E) bar spacing shall be adjusted by ±1" to miss existing pier cap reinforcements.
4. Bars indicated thus 20x3-#5 etc. indicates 20 lines of bars with 3 lengths per line
5. Drill and grout bars according to Article 584 of the Standard Specifications with a minimum embedment of 1'-0". All costs included with Concrete Structures.

MINIMUM BAR LAP

#4 bar = 2'-11"
#5 bar = 3'-2"

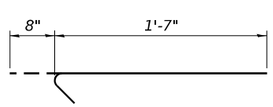

BAR d1000(E)

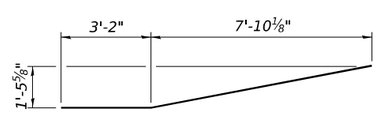

BAR p1001(E)

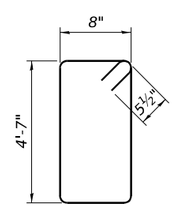

BAR s1000(E)

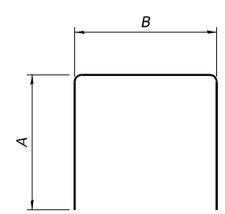

BAR s1001(E), u1000(E) and u1001(E)

s(E) AND u(E) BAR SCHEDULE

Bar	"A"	"B"
s1001	3'-10"	8"
u1000	8"	4'-5"
u1001	10"	4'-5"

BRIDGE SEAT ELEVATIONS

Girder	Elev.	Step Heights
1	434.49	-
2	434.64	1¾"
3	434.78	1⅝"
4	434.93	1¾"
5	435.07	1⅝"
6	435.22	1¾"
7	435.36	1⅝"
8	435.36	1⅝"
9	435.22	1¾"
10	435.07	1⅝"
11	434.93	1¾"
12	434.78	1⅝"
13	434.64	1¾"
14	434.49	-

BILL OF MATERIAL

Bar	No.	Size	Length	Shape
d1000(E)	420	#6	2'-3"	
p1000(E)	8	#5	41'-4"	
p1001(E)	8	#5	11'-1"	
p1002(E)	12	#5	49'-1"	
p1003(E)	12	#5	28'-6"	
p1004(E)	12	#5	6'-9"	
h1000(E)	8	#4	23'-8"	
h1001(E)	32	#4	26'-1"	
s1000(E)	188	#5	11'-5"	
s1001(E)	120	#5	8'-4"	
u1000(E)	124	#4	5'-9"	
u1001(E)	62	#5	6'-1"	
Concrete Structures			Cu. Yd.	51.6
Reinforcement Bars, Epoxy Coated			Pound	7,750

MODEL: Sheet View
FILE NAME: pw://hq-pwint01.a-e.transyscorp.com:transyscorp-pw1/Documents/Projects_2020/CH401/401200165/Bridge/304.02 - Sheet Files/0600202-D876N65-071-PIER 1 DETAILS.dgn

TRANSYSTEMS

USER NAME = mbmcwhorter	DESIGNED - IS	REVISED -	
	CHECKED - IIP	REVISED -	
PLOT SCALE =	DRAWN - IS	REVISED -	
PLOT DATE = 11/13/2025	CHECKED - IIP	REVISED -	

STATE OF ILLINOIS
DEPARTMENT OF TRANSPORTATION

PIER 1 DETAILS
STRUCTURE NO. 060-0202

SHEET S-70 OF S-80 SHEETS

F.A.P. RTE.	SECTION	COUNTY	TOTAL SHEETS	SHEET NO.
0002	(103,104)BR-1	MADISON	178	149

CONTRACT NO. 76N65

ILLINOIS FED. AID PROJECT

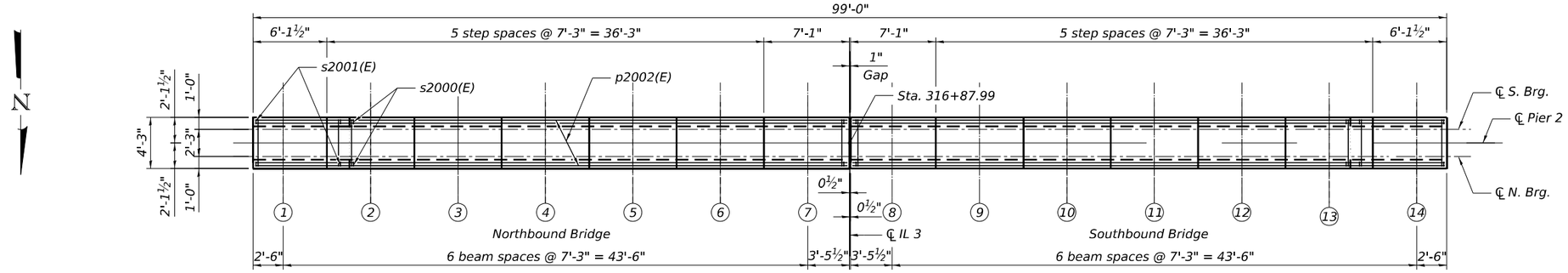

TOP PLAN

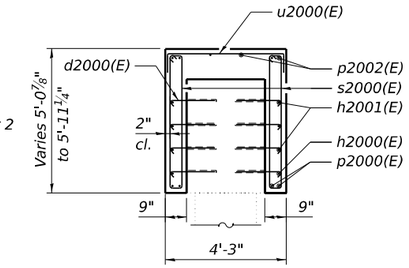

SECTION A-A

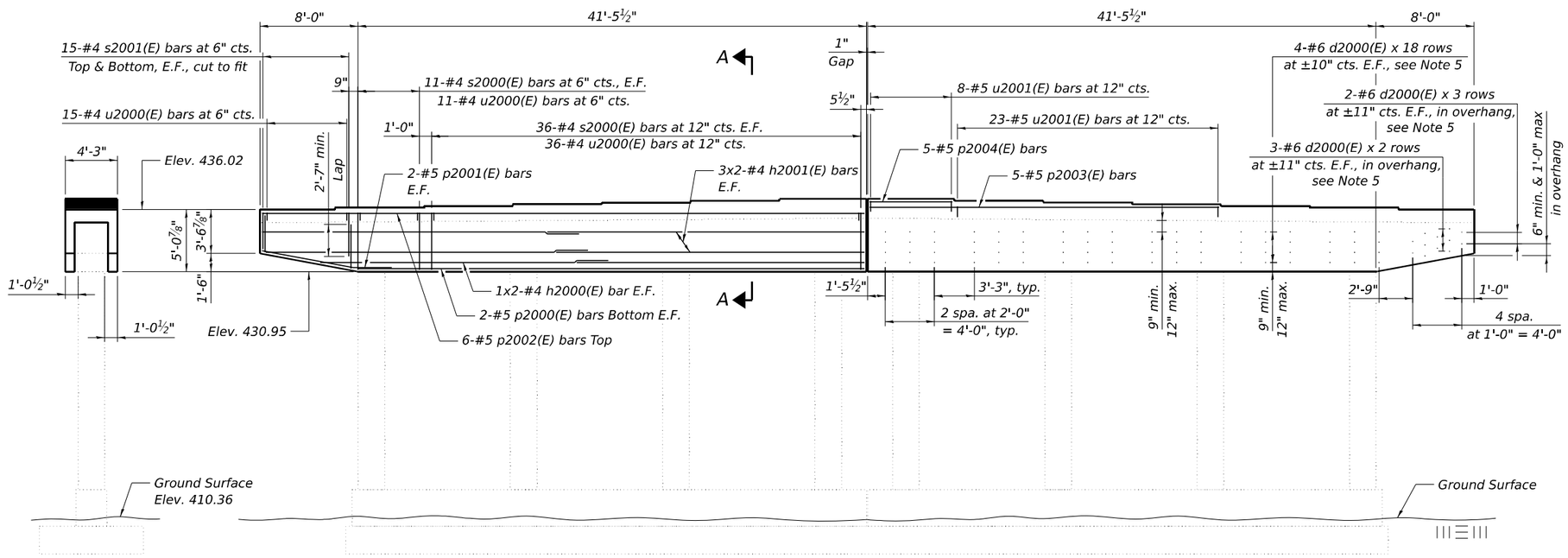

END VIEW

Northbound Pier.
Longitudinal and transverse bars shown only.
Southbound Pier similar.

ELEVATION

(Looking South)

Southbound Pier.
Dowels and additional seat reinforcement shown only. Northbound Pier similar.

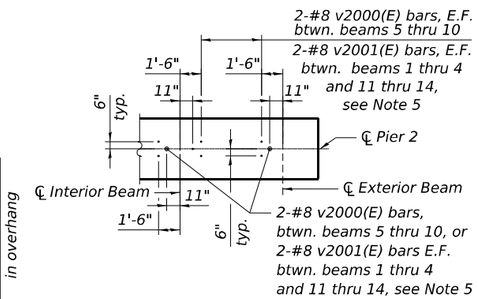

DOWEL LAYOUT

NOTE:

1. Pour steps monolithically with cap extension.
2. E.F. = each face
3. d2000(E) bar spacing shall be adjusted by ±1" to miss existing pier cap reinforcements.
4. Bars indicated thus 20x3-#5 etc. indicates 20 lines of bars with 3 lengths per line.
5. Drill and grout bars according to Article 584 of the Standard Specifications with a minimum embedment of 1'-0". All costs included with Concrete Structures.

MINIMUM BAR LAP

#4 bar = 2'-11"
#5 bar = 3'-2"

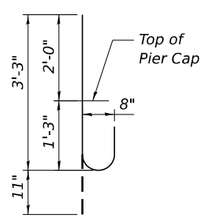

BAR v2000(E)

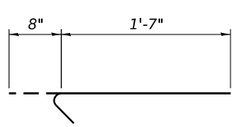

BAR d2000(E)

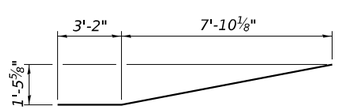

BAR p2001(E)

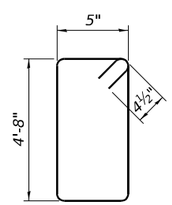

BAR s2000(E)

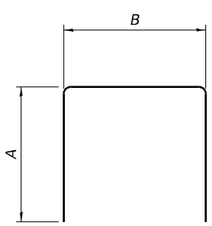

BAR s2001(E), u2000(E), and u2001(E)

s(E) AND u(E) BAR SCHEDULE

Bar	"A"	"B"
s2001	3'-7"	5"
u2000	8"	3'-11"
u2001	10"	3'-11"

BRIDGE SEAT ELEVATIONS

Girder	Elev.	Step Heights
1	436.02	-
2	436.16	1⅝"
3	436.31	1¾"
4	436.45	1⅝"
5	436.60	1¾"
6	436.74	1⅝"
7	436.89	1¾"
8	436.89	1¾"
9	436.74	1⅝"
10	436.60	1¾"
11	436.45	1⅝"
12	436.31	1¾"
13	436.16	1⅝"
14	436.02	-

BILL OF MATERIAL

Bar	No.	Size	Length	Shape
d2000(E)	336	#6	2'-3"	
p2000(E)	8	#5	41'-4"	
p2001(E)	8	#5	11'-1"	
p2002(E)	12	#5	49'-1"	
p2003(E)	10	#5	28'-6"	
p2004(E)	10	#5	6'-9"	
h2000(E)	8	#4	23'-8"	
h2001(E)	24	#4	26'-1"	
s2000(E)	188	#4	10'-11"	
s2001(E)	120	#4	7'-7"	
u2000(E)	124	#4	5'-3"	
u2001(E)	62	#5	5'-7"	
v2000(E)	36	#8	4'-2"	
v2001(E)	42	#8	4'-4"	
Concrete Structures			Cu. Yd.	43.0
Reinforcement Bars, Epoxy Coated			Pound	6,770

MODEL: Sheet View
FILE NAME: pw://hq-pwin01.a-e.transyscorp.com:transyscorp-pw1/Documents/Projects_2020/CH401/401200165/Bridge/304.02 - Sheet Files/0600202-D876N65-072-PIER 2 DETAILS.dgn

TRANSYSTEMS

USER NAME = mbmcwhorter	DESIGNED - JSC	REVISED -	
	CHECKED - IIP	REVISED -	
PLOT SCALE =	DRAWN - JSC	REVISED -	
PLOT DATE = 11/13/2025	CHECKED - IIP	REVISED -	

STATE OF ILLINOIS
DEPARTMENT OF TRANSPORTATION

PIER 2 DETAILS
STRUCTURE NO. 060-0202

SHEET S-71 OF S-80 SHEETS

F.A.P. RTE.	SECTION	COUNTY	TOTAL SHEETS	SHEET NO.
0002	(103,104)BR-1	MADISON	178	150

CONTRACT NO. 76N65

ILLINOIS FED. AID PROJECT

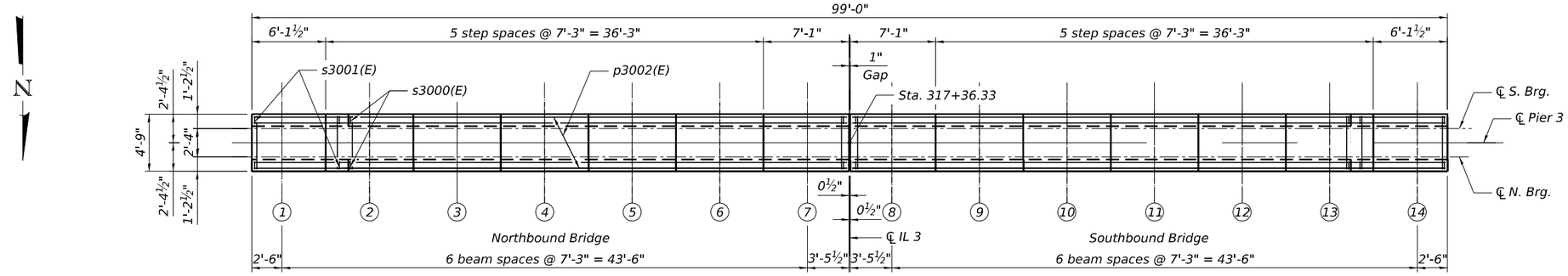

TOP PLAN

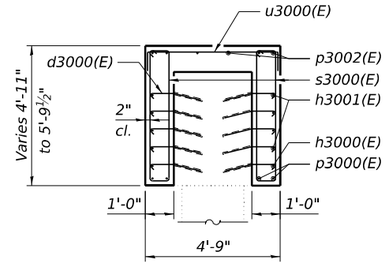

SECTION A-A

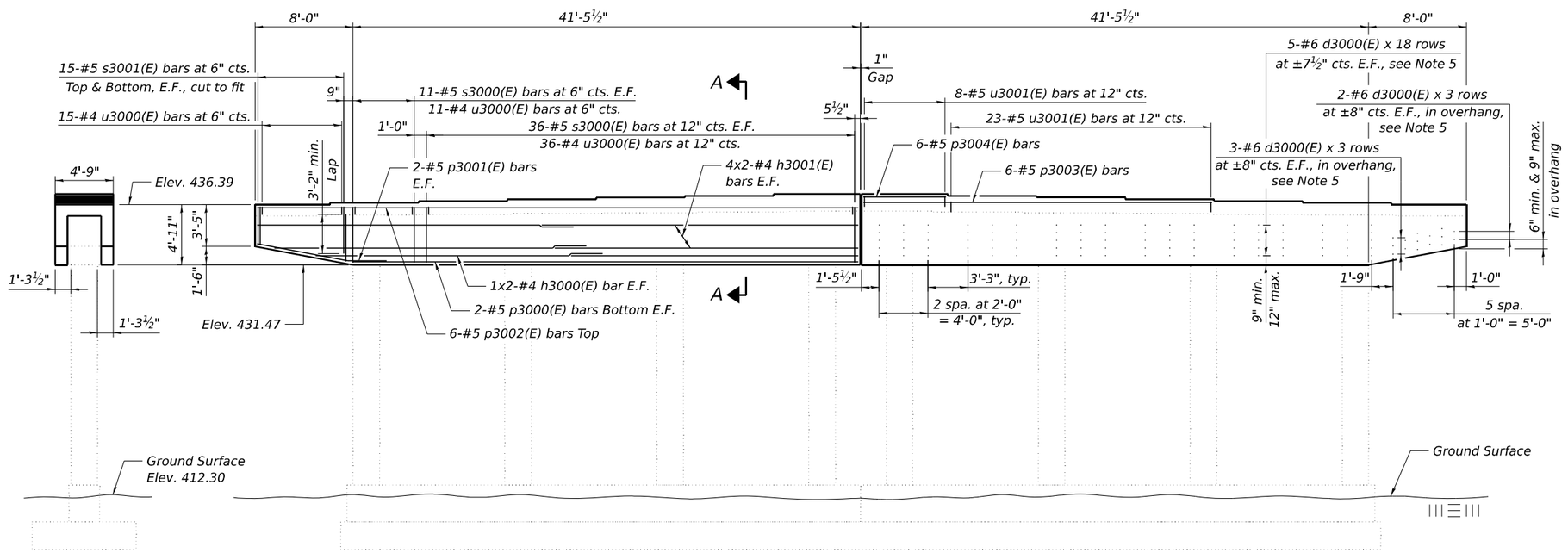

END VIEW

Northbound Pier.
Longitudinal and transverse bars shown only.
Southbound Pier similar.

ELEVATION

(Looking South)

Southbound Pier.
Dowels and additional seat reinforcement shown only. Northbound Pier similar.

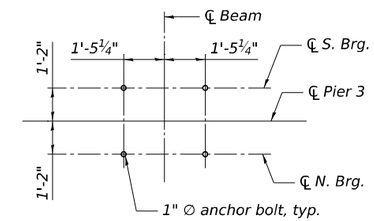

ANCHOR BOLT LAYOUT

NOTE:

1. Pour steps monolithically with cap extension.
2. E.F. = each face
3. d3000(E) bar spacing shall be adjusted by ±1" to miss existing pier cap reinforcements.
4. Bars indicated thus 20x3-#5 etc. indicates 20 lines of bars with 3 lengths per line.
5. Drill and grout bars according to Article 584 of the Standard Specifications with a minimum embedment of 1'-0". All costs included with Concrete Structures.

MINIMUM BAR LAP

#4 bar = 2'-11"
#5 bar = 3'-2"

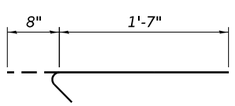

BAR d3000(E)

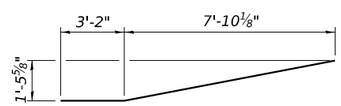

BAR p3001(E)

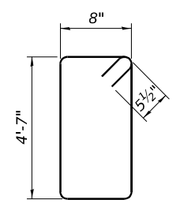

BAR s3000(E)

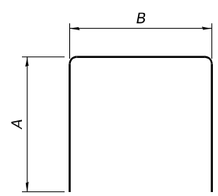

BAR s3001(E), u3000(E), and u3001(E)

s(E) AND u(E) BAR SCHEDULE

Bar	"A"	"B"
s3001	3'-10"	8"
u3000	8"	4'-5"
u3001	10"	4'-5"

BRIDGE SEAT ELEVATIONS

Girder	Elev.	Step Heights
1	436.39	-
2	436.53	1⅝"
3	436.68	1¾"
4	436.82	1⅝"
5	436.97	1¾"
6	437.11	1⅝"
7	437.26	1¾"
8	437.26	1¾"
9	437.11	1⅝"
10	436.97	1¾"
11	436.82	1⅝"
12	436.68	1¾"
13	436.53	1⅝"
14	436.39	-

BILL OF MATERIAL

Bar	No.	Size	Length	Shape
d3000(E)	420	#6	2'-3"	
p3000(E)	8	#5	41'-4"	
p3001(E)	8	#5	11'-1"	
p3002(E)	12	#5	49'-1"	
p3003(E)	12	#5	28'-6"	
p3004(E)	12	#5	6'-9"	
h3000(E)	8	#4	23'-8"	
h3001(E)	32	#4	26'-1"	
s3000(E)	188	#5	11'-5"	
s3001(E)	120	#5	8'-4"	
u3000(E)	124	#4	5'-9"	
u3001(E)	62	#5	6'-1"	
Concrete Structures			Cu. Yd.	50.3
Reinforcement Bars, Epoxy Coated			Pound	7,750

MODEL: Sheet View
FILE NAME: pw://hq-pwint01.a-e.transyscorp.com:transyscorp-pw1/Documents/Projects_2020/CH401/401200165/Bridge/304.02 - Sheet Files/0600202-D876N65-073-PIER 3 DETAILS.dgn

TRANSYSTEMS

USER NAME = mbmcwhorter	DESIGNED - JSC	REVISED -	
	CHECKED - IS	REVISED -	
PLOT SCALE =	DRAWN - JSC	REVISED -	
PLOT DATE = 11/13/2025	CHECKED - IS	REVISED -	

STATE OF ILLINOIS
DEPARTMENT OF TRANSPORTATION

PIER 3 DETAILS
STRUCTURE NO. 060-0202

SHEET S-72 OF S-80 SHEETS

F.A.P. RTE.	SECTION	COUNTY	TOTAL SHEETS	SHEET NO.
0002	(103,104)BR-1	MADISON	178	151

CONTRACT NO. 76N65

ILLINOIS FED. AID PROJECT

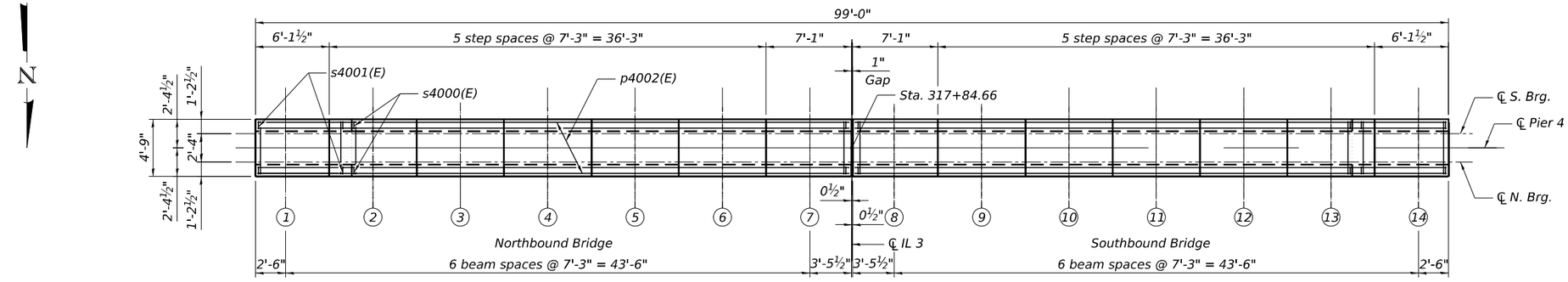

TOP PLAN

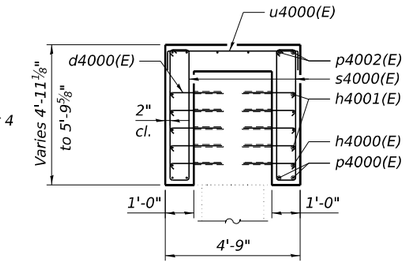

SECTION A-A

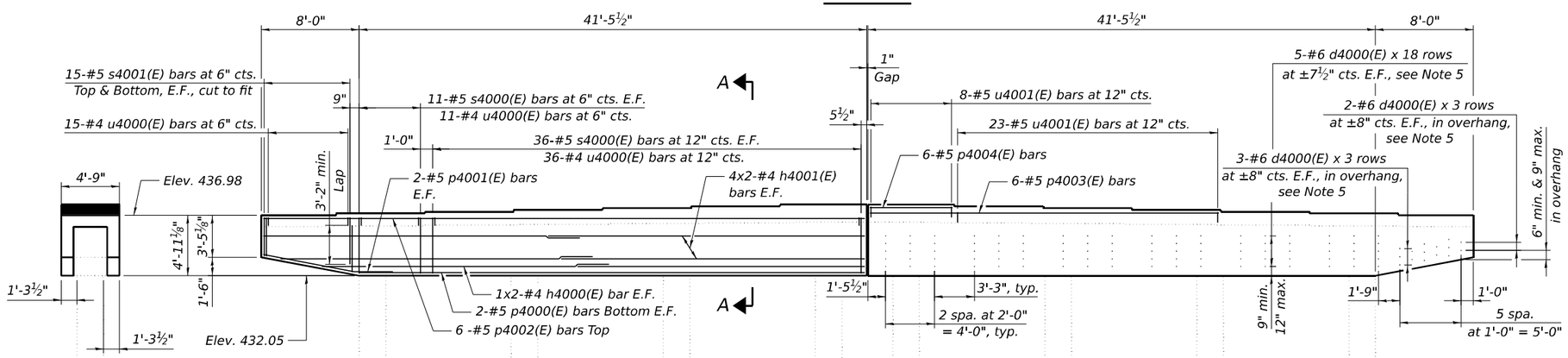

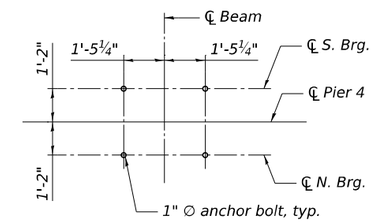

ANCHOR BOLT LAYOUT

NOTE:

1. Pour steps monolithically with cap extension.
2. E.F. = each face
3. d4000(E) bar spacing shall be adjusted by ±1" to miss existing pier cap reinforcements.
4. Bars indicated thus 20x3-#5 etc. indicates 20 lines of bars with 3 lengths per line.
5. Drill and grout bars according to Article 584 of the Standard Specifications with a minimum embedment of 1'-0". All cost included with Concrete Structures.

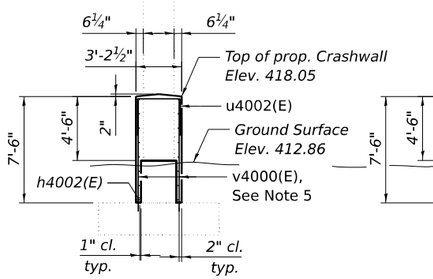

END VIEW

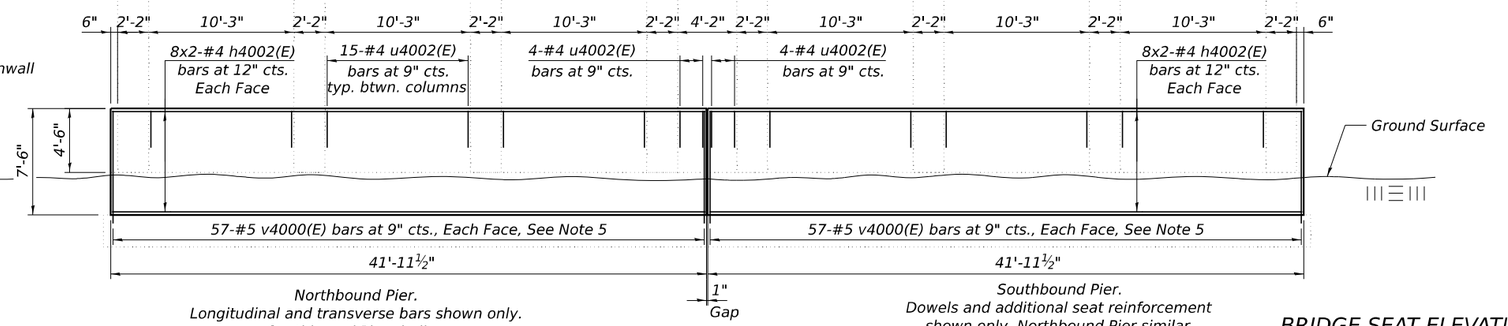

ELEVATION

(Looking South)

MINIMUM BAR LAP

#4 bar = 2'-11"
#5 bar = 3'-2"

BILL OF MATERIAL

Bar	No.	Size	Length	Shape
d4000(E)	420	#6	2'-3"	
p4000(E)	8	#5	41'-4"	
p4001(E)	8	#5	11'-1"	
p4002(E)	12	#5	49'-1"	
p4003(E)	12	#5	28'-6"	
p4004(E)	12	#5	6'-9"	
h4000(E)	8	#4	23'-8"	
h4001(E)	32	#4	26'-1"	
h4002(E)	64	#4	22'-4"	
s4000(E)	188	#5	11'-5"	
s4001(E)	120	#5	8'-4"	
u4000(E)	124	#4	5'-9"	
u4001(E)	62	#5	6'-1"	
u4002(E)	98	#4	8'-8"	
v4000(E)	228	#5	8'-4"	
Structure Excavation			Cu. Yd.	29
Concrete Structures			Cu. Yd.	96.5
Reinforcement Bars, Epoxy Coated			Pound	11,260

BRIDGE SEAT ELEVATIONS

Girder	Elev.	Step Heights
1	436.98	-
2	437.13	1¾"
3	437.27	1⅝"
4	437.42	1¾"
5	437.56	1⅝"
6	437.71	1¾"
7	437.85	1⅝"
8	437.85	1⅝"
9	437.71	1¾"
10	437.56	1⅝"
11	437.42	1¾"
12	437.27	1⅝"
13	437.13	1¾"
14	436.98	-

s(E) AND u(E) BAR SCHEDULE

Bar	"A"	"B"
s4001	3'-10"	8"
u4000	8"	4'-5"
u4001	10"	4'-5"
u4002	2'-11"	2'-10"

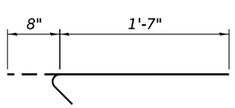

BAR d4000(E)

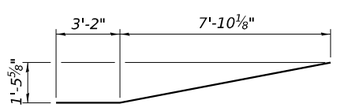

BAR p4001(E)

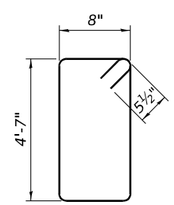

BAR s4000(E)

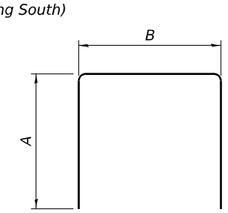

BAR s4001(E), u4000(E), and u4001(E)

MODEL: Sheet View
FILE NAME: pw://hq-pwint01.a-e.transyscorp.com:transyscorp-pw1/Documents/Projects_2020/CH401/401201165/Bridge/304.02 - Sheet Files/0600202-D876N65-074-PIER 4 DETAILS.dgn

TRANSYSTEMS

USER NAME = mbmcwhorter	DESIGNED - JSC	REVISED -	
	CHECKED - IS	REVISED -	
PLOT SCALE =	DRAWN - JSC	REVISED -	
PLOT DATE = 11/13/2025	CHECKED - IS	REVISED -	

STATE OF ILLINOIS
DEPARTMENT OF TRANSPORTATION

PIER 4 DETAILS
STRUCTURE NO. 060-0202

SHEET S-73 OF S-80 SHEETS

F.A.P. RTE.	SECTION	COUNTY	TOTAL SHEETS	SHEET NO.
0002	(103,104)BR-1	MADISON	178	152
		CONTRACT NO. 76N65		
		ILLINOIS	FED. AID PROJECT	

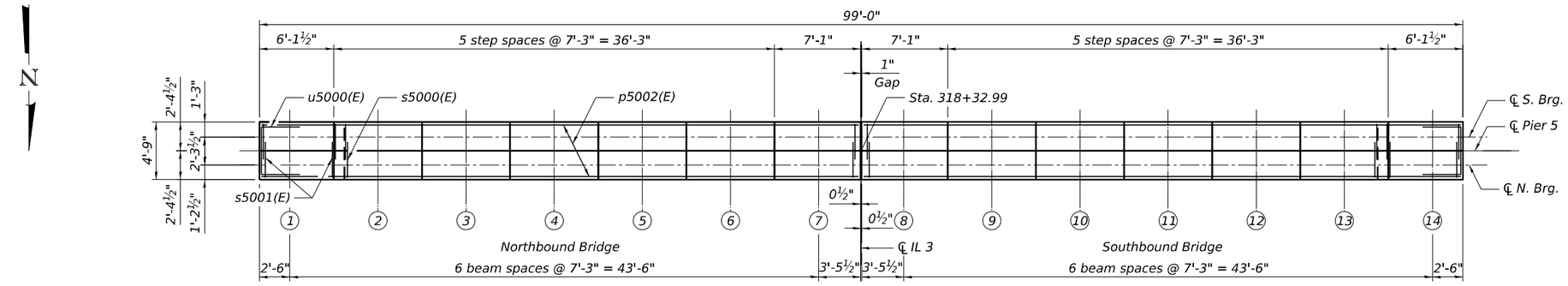

TOP PLAN

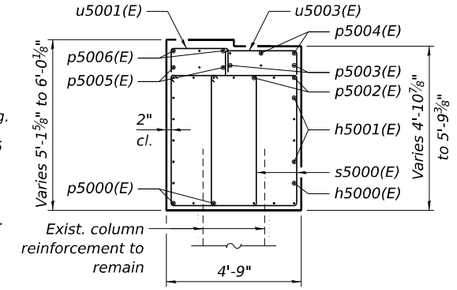

SECTION A-A

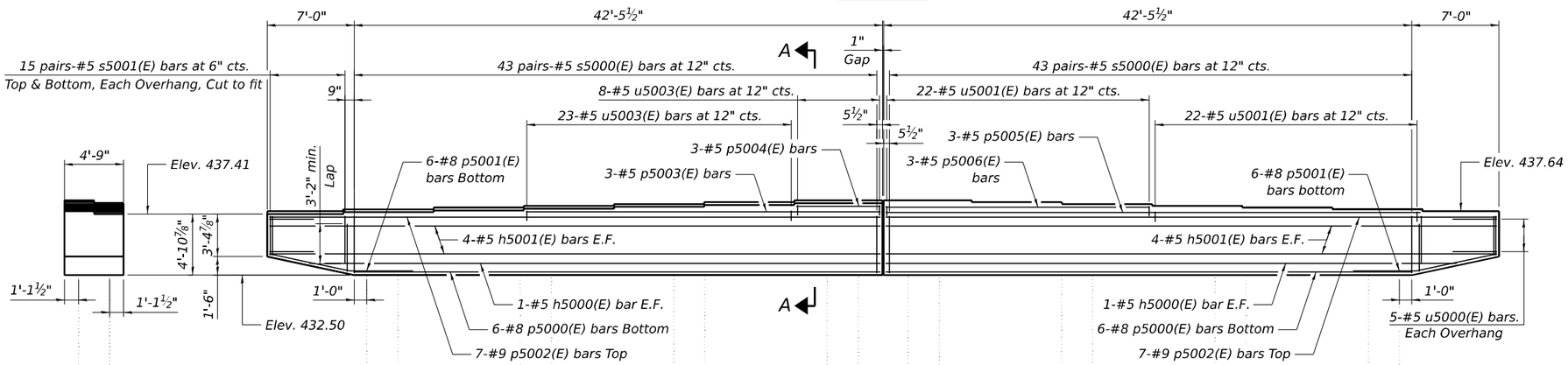

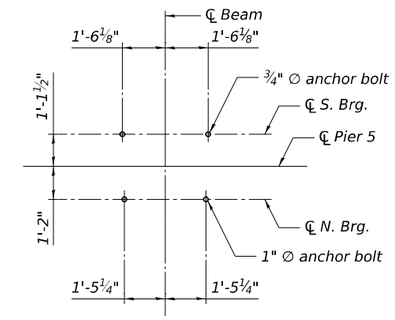

ANCHOR BOLT LAYOUT

NOTE:

1. Pour steps monolithically with cap extension.
2. E.F. = each face
3. Drill and grout bars according to Article 584 of the Standard Specifications with a minimum embedment of 1'-0". All cost included with Concrete Structures.
4. Bars indicated thus 20x3-#5 etc. indicates 20 lines of bars with 3 lengths per line.

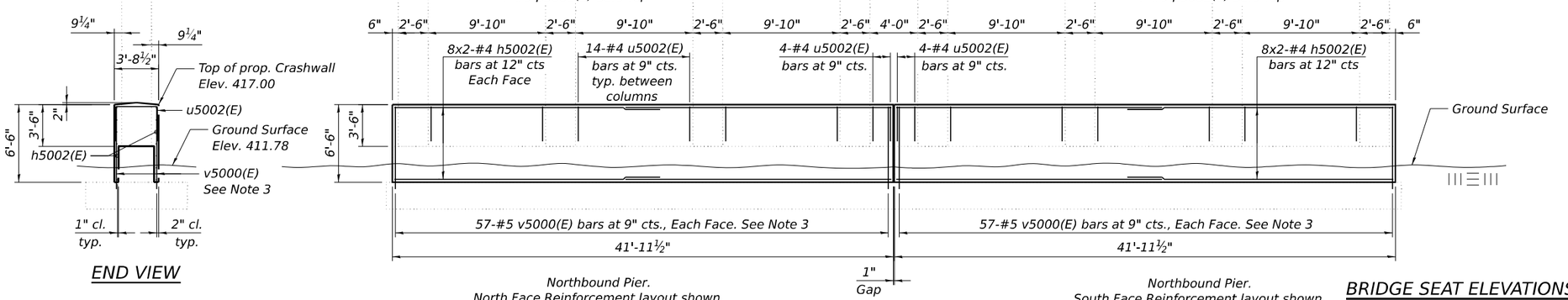

END VIEW

ELEVATION

Northbound Pier.
North Face Reinforcement layout shown.
Southbound Pier similar.
(Looking South)

Northbound Pier.
South Face Reinforcement layout shown.
Southbound Pier similar.
(Looking North)

MINIMUM BAR LAP

#4 bar = 2'-11"
#5 bar = 3'-7"
#8 bar = 5'-1"

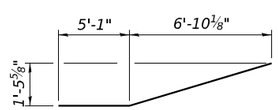

BAR p5001(E)

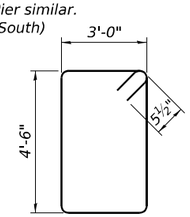

BAR s5000(E)

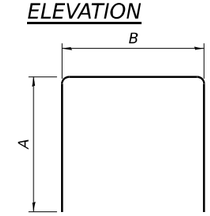

BAR s5001(E), and u5000(E) through u5003(E)

s(E) AND u(E) BAR SCHEDULE

Bar	"A"	"B"
s5001	3'-10"	3'-0"
u5000	3'-7"	4'-5"
u5001	10"	2'-0"
u5002	2'-11"	3'-4"
u5003	10"	2'-5"

BRIDGE SEAT ELEVATIONS

Girder	N. Elev.	N. Step Heights	S. Elev.	S. Step Heights
1	437.41	-	437.64	-
2	437.56	1¾"	437.78	1⅝"
3	437.70	1⅝"	437.93	1¾"
4	437.85	1¾"	438.07	1⅝"
5	437.99	1⅝"	438.22	1¾"
6	438.14	1¾"	438.36	1⅝"
7	438.28	1⅝"	438.51	1¾"
8	438.28	1⅝"	438.51	1¾"
9	438.14	1¾"	438.36	1⅝"
10	437.99	1⅝"	438.22	1¾"
11	437.85	1¾"	438.07	1⅝"
12	437.70	1⅝"	437.93	1¾"
13	437.56	1¾"	437.78	1⅝"
14	437.41	-	437.64	-

BILL OF MATERIAL

Bar	No.	Size	Length	Shape
h5000(E)	4	#5	45'-11"	
h5001(E)	16	#5	49'-1"	
h5002(E)	64	#4	22'-4"	
p5000(E)	12	#8	42'-5"	
p5001(E)	12	#8	12'-1"	
p5002(E)	14	#9	49'-1"	
p5003(E)	6	#5	28'-6"	
p5004(E)	6	#5	6'-9"	
p5005(E)	6	#5	43'-0"	
p5006(E)	6	#5	21'-3"	
s5000(E)	172	#5	15'-11"	
s5001(E)	120	#5	10'-8"	
u5000(E)	10	#5	11'-7"	
u5001(E)	88	#5	3'-8"	
u5002(E)	92	#4	9'-2"	
u5003(E)	62	#5	4'-1"	
v5000(E)	228	#5	7'-2"	
Structure Excavation			Cu. Yd.	16
Concrete Structures			Cu. Yd.	134.8
Reinforcement Bars, Epoxy Coated			Pound	13,860
Concrete Sealer			Sq. Ft.	1,523

MODEL: Sheet View
FILE NAME: pw://hq-pwint01.a-e.transyscorp.com:transyscorp-pw1/Documents/Projects_2020/CH401/401200165/Bridge/304.02 - Sheet Files/0600202-D876N65-075-PIER 5 DETAILS.dgn

TRANSYSTEMS

USER NAME = mbmcwhorter	DESIGNED - IS	REVISED -	
	CHECKED - IIP	REVISED -	
PLOT SCALE =	DRAWN - IS	REVISED -	
PLOT DATE = 11/13/2025	CHECKED - IIP	REVISED -	

STATE OF ILLINOIS
DEPARTMENT OF TRANSPORTATION

PIER 5 DETAILS
STRUCTURE NO. 060-0202

SHEET S-74 OF S-80 SHEETS

F.A.P. RTE.	SECTION	COUNTY	TOTAL SHEETS	SHEET NO.
0002	(103,104)BR-1	MADISON	178	153
		CONTRACT NO. 76N65		
		ILLINOIS	FED. AID PROJECT	

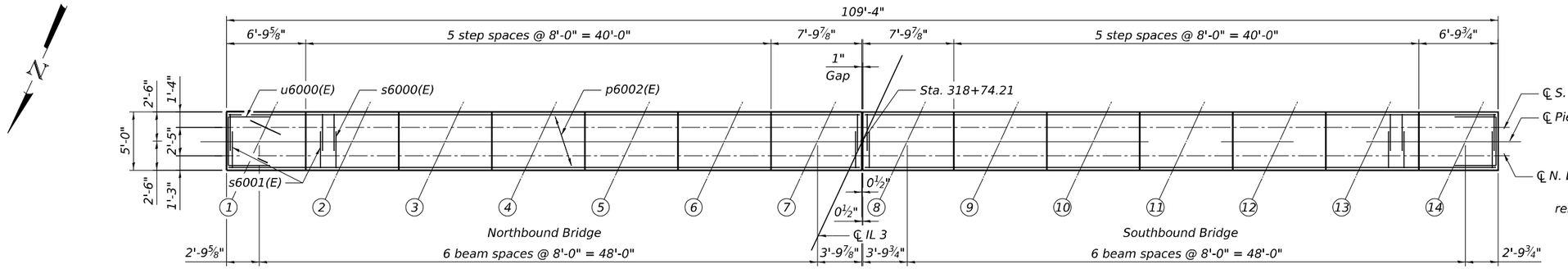

TOP PLAN

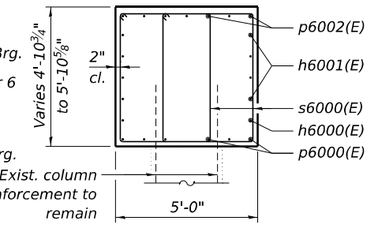

SECTION A-A

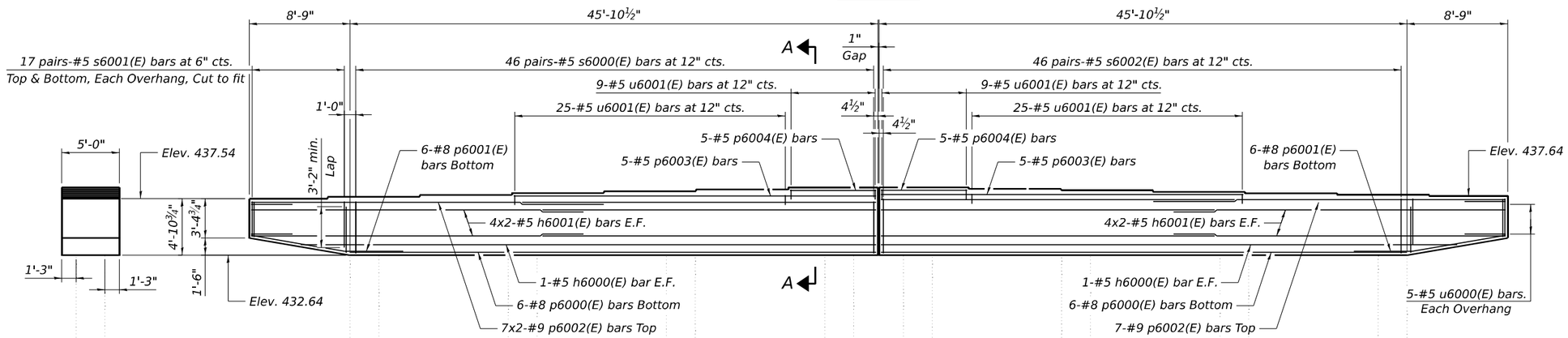

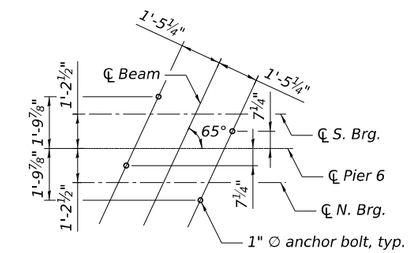

ANCHOR BOLT LAYOUT

NOTE:

1. Pour steps monolithically with cap extension.
2. E.F. = each face
3. Bars indicated thus 20x3-#5 etc. indicates 20 lines of bars with 3 lengths per line.

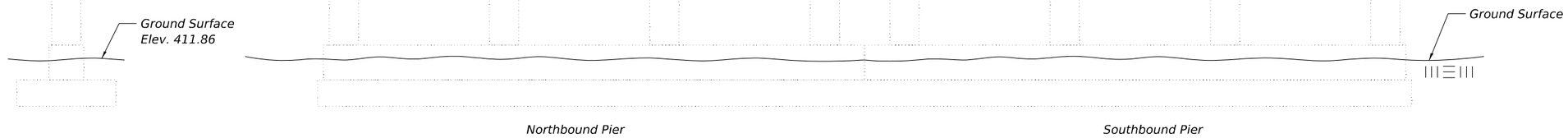

END VIEW

ELEVATION

(Looking South)

MINIMUM BAR LAP

#4 bar = 2'-11"
#5 bar = 3'-7"
#8 bar = 5'-1"
#9 bar = 7'-1"

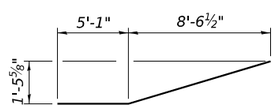

BAR p6001(E)

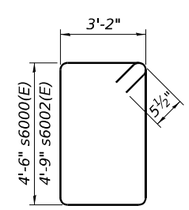

BAR s6000(E) and BAR s6002(E)

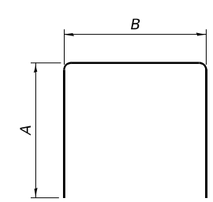

BAR s6001(E), u6000(E), and u6001(E)

s(E) AND u(E) BAR SCHEDULE

Bar	"A"	"B"
s6001	4'-0"	3'-2"
u6000	3'-7"	4'-8"
u6001	10"	4'-8"

BRIDGE SEAT ELEVATIONS

Girder	Elev.	Step Heights
1	437.54	-
2	437.71	2"
3	437.87	1⅞"
4	438.03	1⅞"
5	438.20	2"
6	438.36	1⅞"
7	438.52	1⅞"
8	438.53	1½"
9	438.40	1½"
10	438.27	1½"
11	438.14	1½"
12	438.01	1⅜"
13	437.87	1⅛"
14	437.78	-

BILL OF MATERIAL

Bar	No.	Size	Length	Shape
h6000(E)	4	#5	50'-0"	
h6001(E)	32	#5	29'-0"	
p6000(E)	12	#8	45'-9"	
p6001(E)	12	#8	13'-9"	
p6002(E)	28	#9	30'-9"	
p6003(E)	10	#5	31'-5"	
p6004(E)	10	#5	7'-6"	
s6000(E)	92	#5	16'-3"	
s6001(E)	136	#5	11'-2"	
s6002(E)	92	#5	16'-9"	
u6000(E)	10	#5	11'-10"	
u6001(E)	68	#5	6'-4"	
Concrete Structures			Cu. Yd.	108.0
Reinforcement Bars, Epoxy Coated			Pound	11,740
Concrete Sealer			Sq. Ft.	1,713

MODEL: Sheet View
FILE NAME: pw://hq-pwint01.a-e.transyscorp.com:transyscorp-pw1/Documents/Projects_2020/CH401/401200165/Bridge/304.02 - Sheet Files/0600202-D876N65-076-PIER 6 DETAILS.dgn

TRANSYSTEMS

USER NAME = mbmcwhorter	DESIGNED - IS	REVISED -	
	CHECKED - IPP	REVISED -	
PLOT SCALE =	DRAWN - IS	REVISED -	
PLOT DATE = 11/13/2025	CHECKED - IPP	REVISED -	

STATE OF ILLINOIS
DEPARTMENT OF TRANSPORTATION

PIER 6 DETAILS
STRUCTURE NO. 060-0202

SHEET S-75 OF S-80 SHEETS

F.A.P. RTE.	SECTION	COUNTY	TOTAL SHEETS	SHEET NO.
0002	(103,104)BR-1	MADISON	178	154
		CONTRACT NO. 76N65		
		ILLINOIS	FED. AID PROJECT	

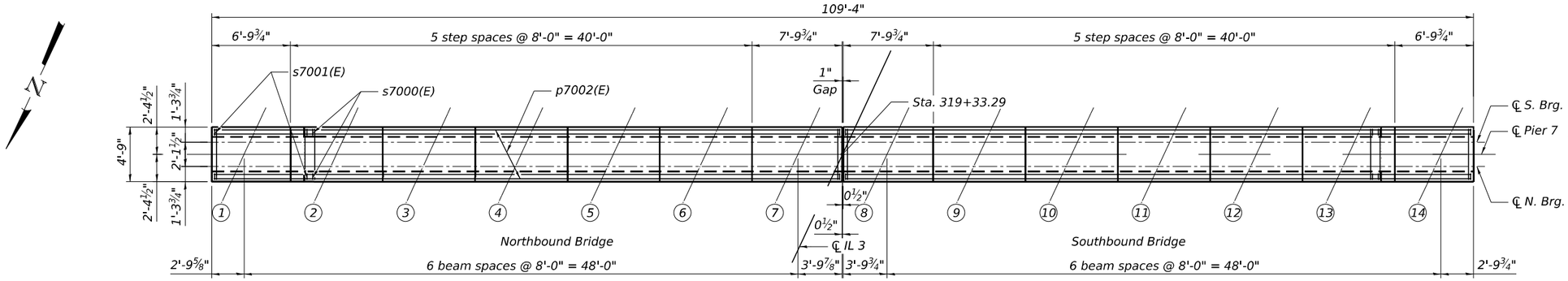

TOP PLAN

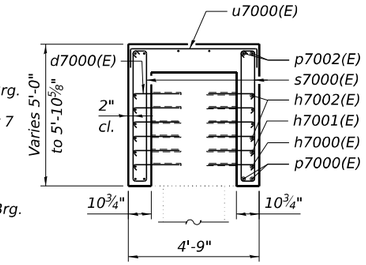

SECTION A-A

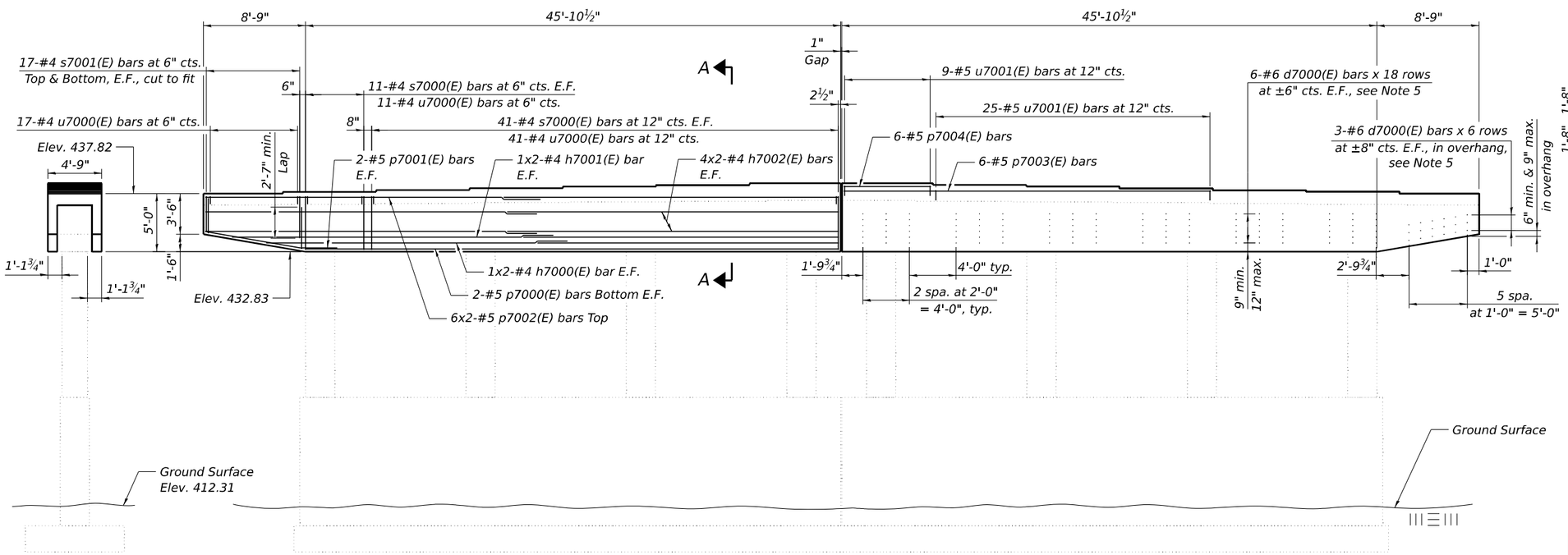

END VIEW

Northbound Pier.
Longitudinal and transverse bars shown only.
Southbound Pier similar.

ELEVATION

(Looking South)

Southbound Pier.
Dowels and additional seat reinforcement
shown only. Northbound Pier similar.

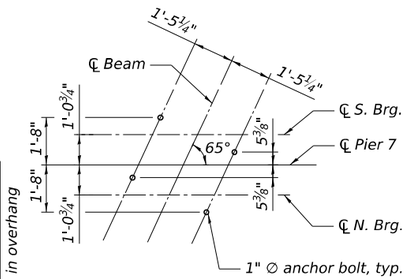

ANCHOR BOLT LAYOUT

NOTE:

1. Pour steps monolithically with cap extension.
2. E.F. = each face
3. d7000(E) bar spacing shall be adjusted by ±1" to miss existing pier cap reinforcements.
4. Bars indicated thus 20x3-#5 etc. indicates 20 lines of bars with 3 lengths per line.
5. Drill and grout bars according to Article 584 of the Standard Specifications with a minimum embedment of 1'-0". All costs included with Concrete Structures.

MINIMUM BAR LAP

#4 bar = 2'-11"
#5 bar = 3'-7"

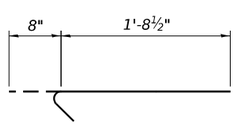

BAR d7000(E)

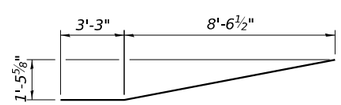

BAR p7001(E)

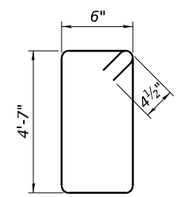

BAR s7000(E)

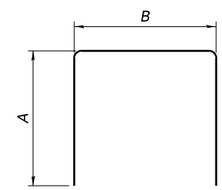

BAR s7001(E), u7000(E), and u7001(E)

s(E) AND u(E) BAR SCHEDULE

Bar	"A"	"B"
s7001	3'-7"	6"
u7000	8"	4'-5"
u7001	10"	4'-5"

BRIDGE SEAT ELEVATIONS

Girder	Elev.	Step Heights
1	437.82	-
2	437.97	1¾"
3	438.12	1¾"
4	438.27	1¾"
5	438.42	1¾"
6	438.56	1⅝"
7	438.71	1¾"
8	438.71	1⅝"
9	438.57	1¾"
10	438.42	1⅝"
11	438.28	1¾"
12	438.13	1¾"
13	437.98	1¾"
14	437.83	-

BILL OF MATERIAL

Bar	No.	Size	Length	Shape
d7000(E)	504	#6	2'-4½"	
p7000(E)	8	#5	45'-8"	
p7001(E)	8	#5	11'-11"	
p7002(E)	24	#5	29'-0"	
p7003(E)	12	#5	31'-5"	
p7004(E)	12	#5	7'-5"	
h7000(E)	8	#4	26'-1"	
h7001(E)	8	#4	27'-6"	
h7002(E)	32	#4	28'-8"	
s7000(E)	208	#4	10'-11"	
s7001(E)	136	#4	7'-8"	
u7000(E)	138	#4	5'-9"	
u7001(E)	68	#5	6'-1"	
Concrete Structures			Cu. Yd.	52.9
Reinforcement Bars, Epoxy Coated			Pound	7,570

MODEL: Sheet View
FILE NAME: pw://hq-pwint01.a-e.transyscorp.com:transyscorp-pw1/Documents/Projects_2020/CH401/401200165/Bridge/304.02 - Sheet Files/0600202-D876N65-077-PIER 7 DETAILS.dgn

TRANSYSTEMS

USER NAME = mbmcwhorter	DESIGNED - JSC	REVISED -	
	CHECKED - IS	REVISED -	
PLOT SCALE =	DRAWN - JSC	REVISED -	
PLOT DATE = 11/13/2025	CHECKED - IS	REVISED -	

STATE OF ILLINOIS
DEPARTMENT OF TRANSPORTATION

PIER 7 DETAILS
STRUCTURE NO. 060-0202

SHEET S-76 OF S-80 SHEETS

F.A.P. RTE.	SECTION	COUNTY	TOTAL SHEETS	SHEET NO.
0002	(103,104)BR-1	MADISON	178	155

CONTRACT NO. 76N65

ILLINOIS | FED. AID PROJECT

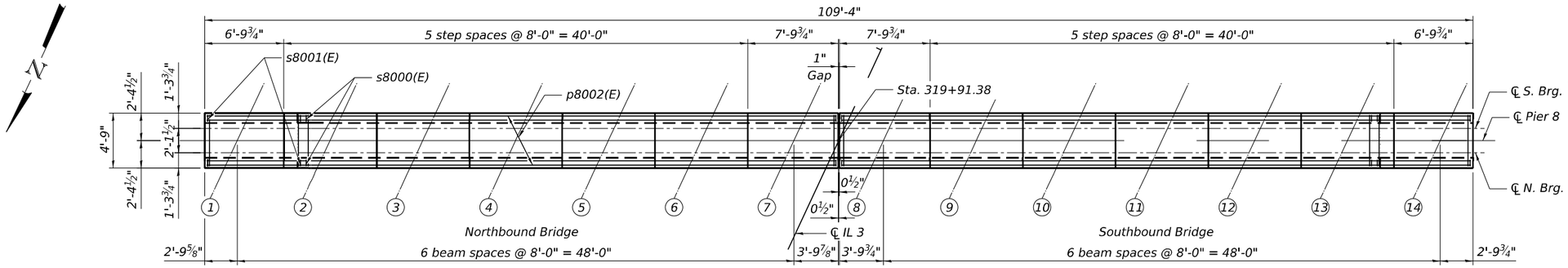

TOP PLAN

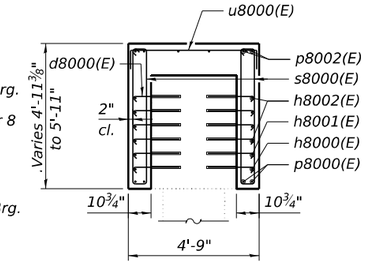

SECTION A-A

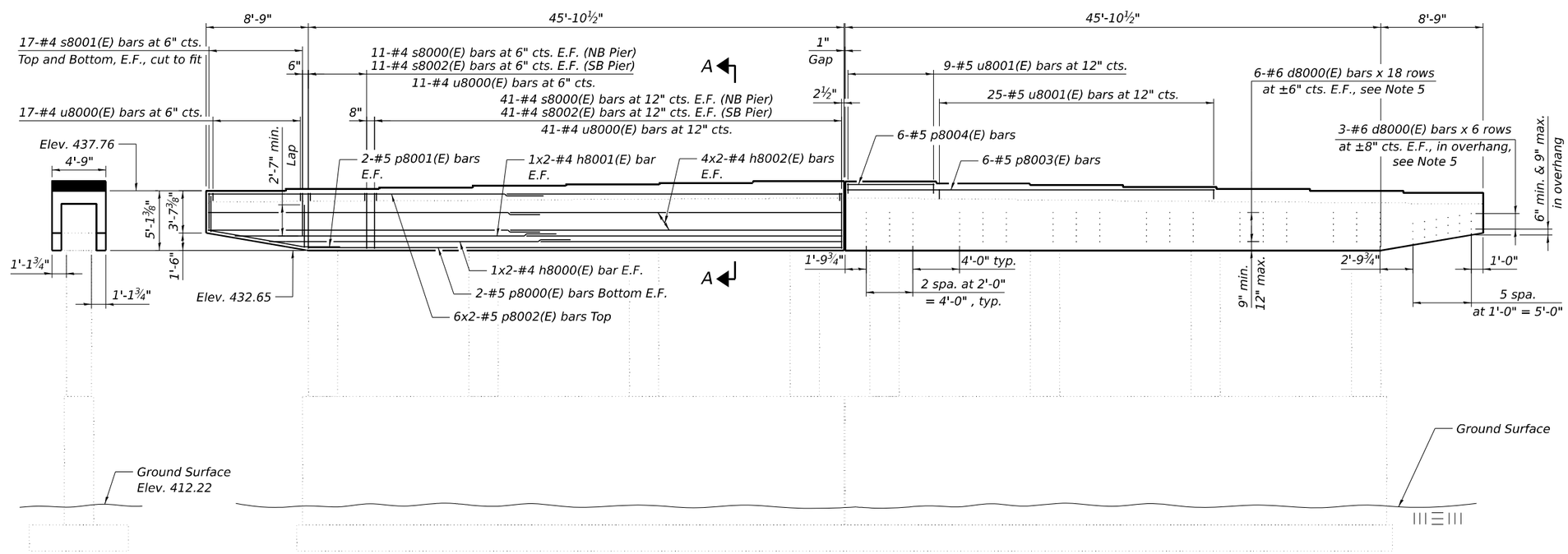

END VIEW

Northbound Pier.
Longitudinal and transverse bars shown only.
Southbound Pier similar.

ELEVATION

(Looking South)

Southbound Pier.
Dowels and additional seat reinforcement
shown only. Northbound Pier similar.

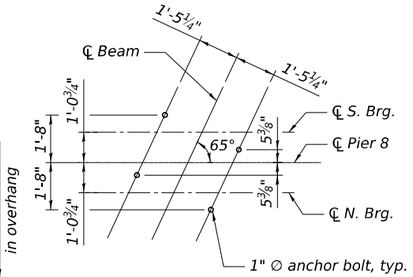

ANCHOR BOLT LAYOUT

NOTE:

1. Pour steps monolithically with cap extension.
2. E.F. = each face
3. d8000(E) bar spacing shall be adjusted by ±1" to miss existing pier cap reinforcements.
4. Bars indicated thus 20x3-#5 etc. indicates 20 lines of bars with 3 lengths per line.
5. Drill and grout bars according to Article 584 of the Standard Specifications with a minimum embedment of 1'-0". All costs included with Concrete Structures.

BILL OF MATERIAL

Bar	No.	Size	Length	Shape
d8000(E)	504	#6	2'-4½"	
p8000(E)	8	#5	45'-8"	
p8001(E)	8	#5	11'-11"	
p8002(E)	24	#5	29'-0"	
p8003(E)	12	#5	31'-5"	
p8004(E)	12	#5	7'-5"	
h8000(E)	8	#4	26'-1"	
h8001(E)	8	#4	27'-6"	
h8002(E)	32	#4	28'-8"	
s8000(E)	104	#4	11'-3"	
s8001(E)	136	#4	7'-10"	
s8002(E)	104	#4	10'-11"	
u8000(E)	138	#4	5'-9"	
u8001(E)	68	#5	6'-1"	
Concrete Structures			Cu. Yd.	51.7
Reinforcement Bars, Epoxy Coated			Pound	7,610

MINIMUM BAR LAP

#4 bar = 2'-11"
#5 bar = 3'-7"

BRIDGE SEAT ELEVATIONS

Girder	Elev.	Step Heights
1	437.76	-
2	437.90	1⅝"
3	438.04	1⅝"
4	438.17	1½"
5	438.31	1⅝"
6	438.44	1½"
7	438.57	1½"
8	438.56	1⅞"
9	438.40	1⅞"
10	438.24	1⅞"
11	438.08	1⅞"
12	437.92	1⅞"
13	437.76	1⅞"
14	437.60	-

s(E) AND u(E) BAR SCHEDULE

Bar	"A"	"B"
s8001	3'-8"	6"
u8000	8"	4'-5"
u8001	10"	4'-5"

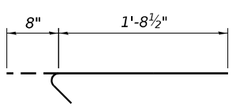

BAR d8000(E)

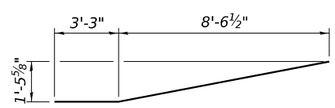

BAR p8001(E)

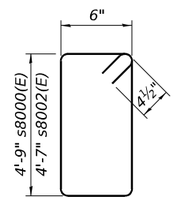

BAR s8000(E) and BAR s8002(E)

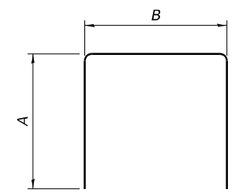

BAR s8001(E), u8000(E), and u8001(E)

MODEL: Sheet View
FILE NAME: pw://hq-pwint01.ae.transyscorp.com:transyscorp-pw1/Documents/Projects_2020/CH401/401200165/Bridge/304.02 - Sheet Files/0600202-D876N65-078-PIER 8 DETAILS.dgn

TRANSYSTEMS

USER NAME = mbmcwhorter	DESIGNED - JSC	REVISED -	
	CHECKED - IS	REVISED -	
PLOT SCALE =	DRAWN - JSC	REVISED -	
PLOT DATE = 11/13/2025	CHECKED - IS	REVISED -	

STATE OF ILLINOIS
DEPARTMENT OF TRANSPORTATION

PIER 8 DETAILS
STRUCTURE NO. 060-0202

SHEET S-77 OF S-80 SHEETS

F.A.P. RTE.	SECTION	COUNTY	TOTAL SHEETS	SHEET NO.
0002	(103,104)BR-1	MADISON	178	156
		CONTRACT NO. 76N65		
		ILLINOIS	FED. AID PROJECT	

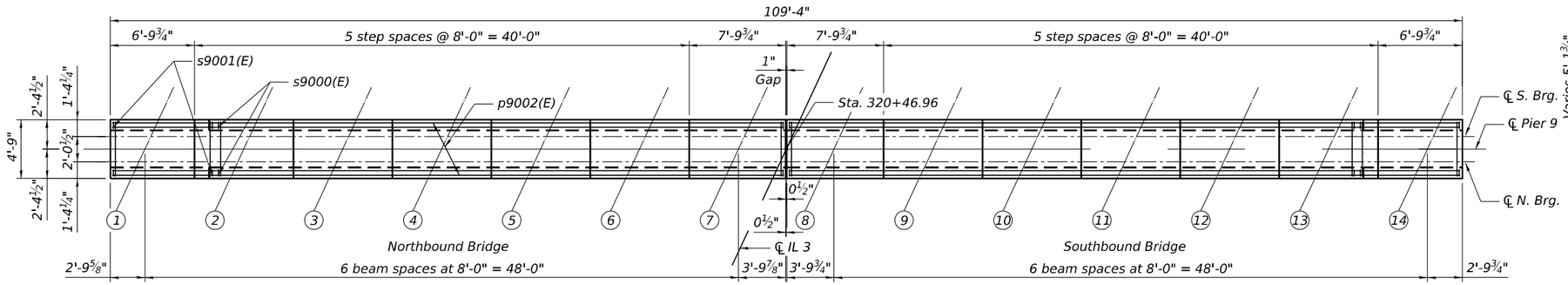

TOP PLAN

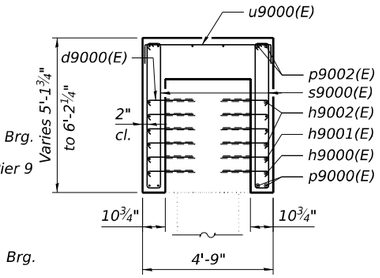

SECTION A-A

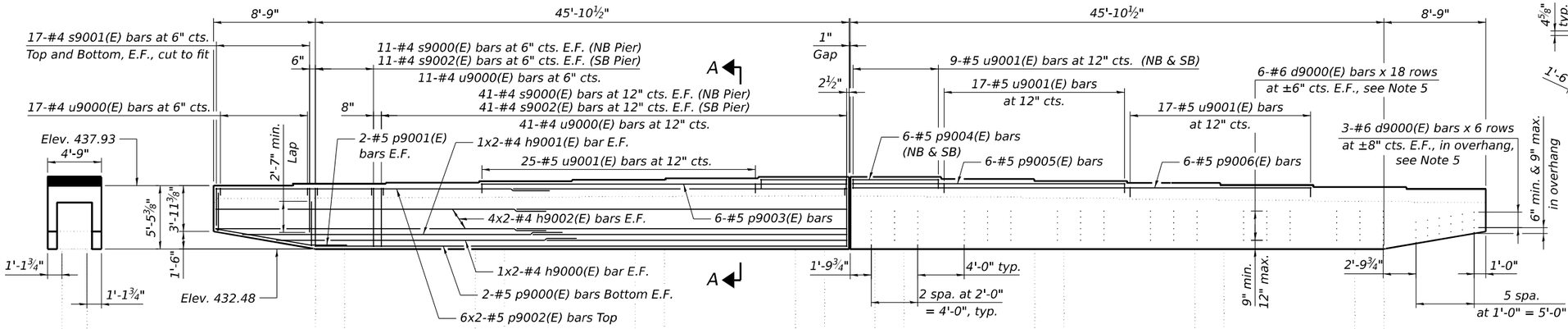

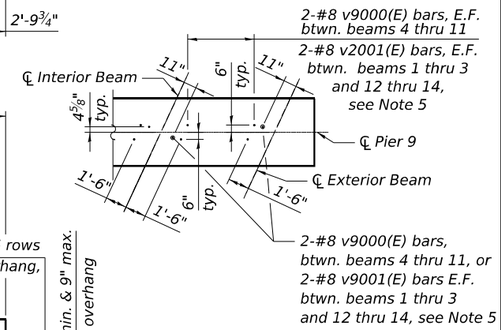

DOWEL LAYOUT

NOTE:

1. Pour steps monolithically with cap extension.
2. E.F. = each face
3. d9000(E) bar spacing shall be adjusted by ±1" to miss existing pier cap reinforcements.
4. Bars indicated thus 20x3-#5 etc. indicates 20 lines of bars with 3 lengths per line.
5. Drill and grout bars according to Article 584 of the Standard Specifications with a minimum embedment of 1'-0". All costs included with Concrete Structures.

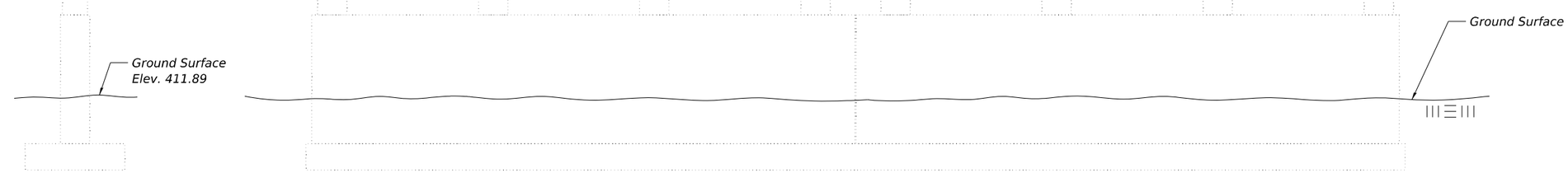

END VIEW

Northbound Pier.
Longitudinal and transverse bars shown only.
Southbound Pier similar.
Bridge Seat Reinforcement shown for Northbound Pier only.

ELEVATION

(Looking South)

Southbound Pier.
Dowels shown only. Northbound Pier similar.
Bridge Seat Reinforcement shown for Southbound Pier only.

BILL OF MATERIAL

Bar	No.	Size	Length	Shape
d9000(E)	504	#6	2'-4½"	
p9000(E)	8	#5	45'-8"	
p9001(E)	8	#5	11'-11"	
p9002(E)	24	#5	29'-0"	
p9003(E)	6	#5	31'-5"	
p9004(E)	12	#5	7'-5"	
p9005(E)	6	#5	23'-5"	
p9006(E)	6	#5	39'-5"	
h9000(E)	8	#4	26'-1"	
h9001(E)	8	#4	27'-6"	
h9002(E)	32	#4	28'-8"	
s9000(E)	104	#4	11'-11"	
s9001(E)	136	#4	8'-2"	
s9002(E)	104	#4	11'-3"	
u9000(E)	138	#4	5'-9"	
u9001(E)	77	#5	6'-1"	
v9000(E)	36	#8	4'-2"	
v9001(E)	42	#8	4'-5"	
Concrete Structures			Cu. Yd.	56.8
Reinforcement Bars, Epoxy Coated			Pound	8,860

MINIMUM BAR LAP

#4 bar = 2'-11"
#5 bar = 3'-7"

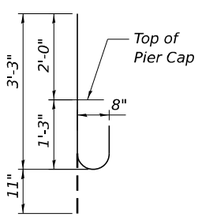

BAR v9000(E)

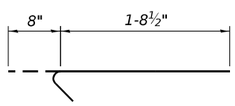

BAR d9000(E)

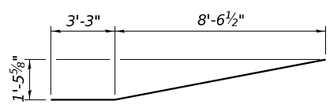

BAR p9001(E)

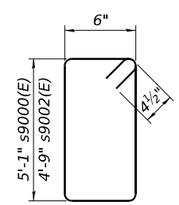

BAR s9000(E) and BAR s9002(E)

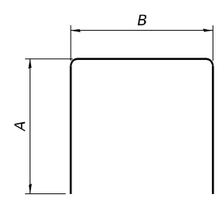

BAR s9001(E), u9000(E), and u9001(E)

s(E) AND u(E) BAR SCHEDULE

Bar	"A"	"B"
s9001	3'-10"	6"
u2000	8"	4'-5"
u2001	10"	4'-5"

BRIDGE SEAT ELEVATIONS

Girder	Elev.	Step Heights
1	437.93	-
2	438.06	1½"
3	438.18	1½"
4	438.30	1½"
5	438.42	1½"
6	438.55	1½"
7	438.67	1½"
8	438.67	2⅛"
9	438.49	2"
10	438.32	2"
11	438.15	2⅛"
12	437.97	2"
13	437.80	2⅛"
14	437.62	-

MODEL: Sheet View
FILE NAME: pw://hq-pwint01.a-e.transyscorp.com:transyscorp-pw1/Documents/Projects_2020/CH401/401200165/Bridge/304.02 - Sheet Files/0600202-D876N65-079-PIER 9 DETAILS.dgn

TRANSYSTEMS

USER NAME = mbmcwhorter	DESIGNED - JSC	REVISED -	
	CHECKED - IS	REVISED -	
PLOT SCALE =	DRAWN - JSC	REVISED -	
PLOT DATE = 11/13/2025	CHECKED - IS	REVISED -	

STATE OF ILLINOIS
DEPARTMENT OF TRANSPORTATION

PIER 9 DETAILS
STRUCTURE NO. 060-0202

SHEET S-78 OF S-80 SHEETS

F.A.P. RTE.	SECTION	COUNTY	TOTAL SHEETS	SHEET NO.
0002	(103,104)BR-1	MADISON	178	157
		CONTRACT NO. 76N65		
		ILLINOIS	FED. AID PROJECT	

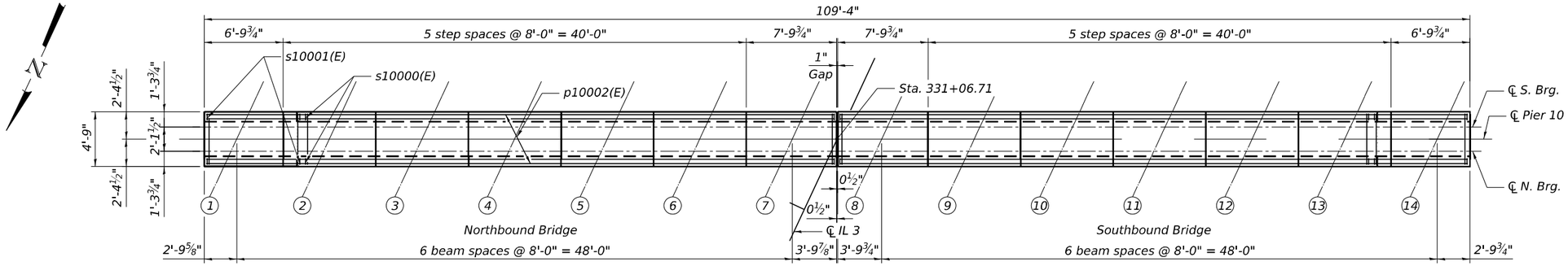

TOP PLAN

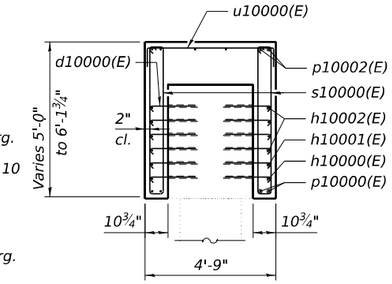

SECTION A-A

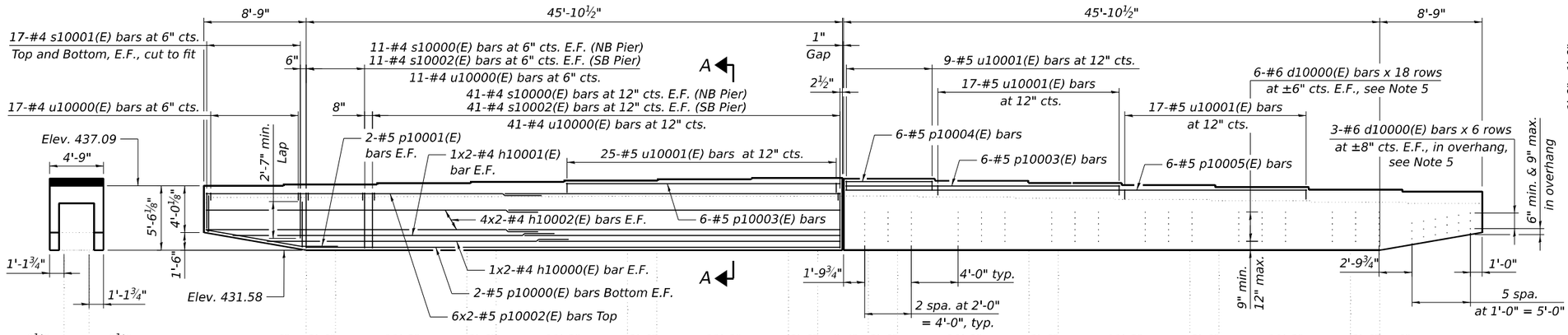

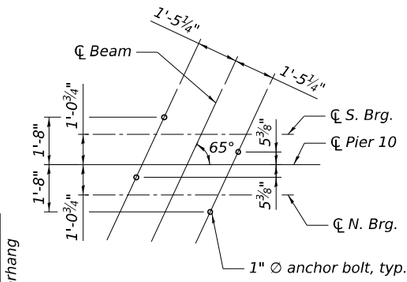

ANCHOR BOLT LAYOUT

NOTE:

1. Pour steps monolithically with cap extension.
2. E.F. = each face
3. d10000(E) bar spacing shall be adjusted by ±1" to miss existing pier cap reinforcements.
4. Bars indicated thus 20x3-#5 etc. indicates 20 lines of bars with 3 lengths per line.
5. Drill and grout bars according to Article 584 of the Standard Specifications with a minimum embedment of 1'-0". All costs included with Concrete Structures.

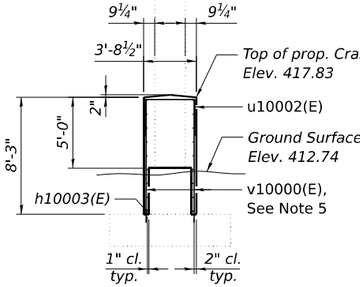

END VIEW

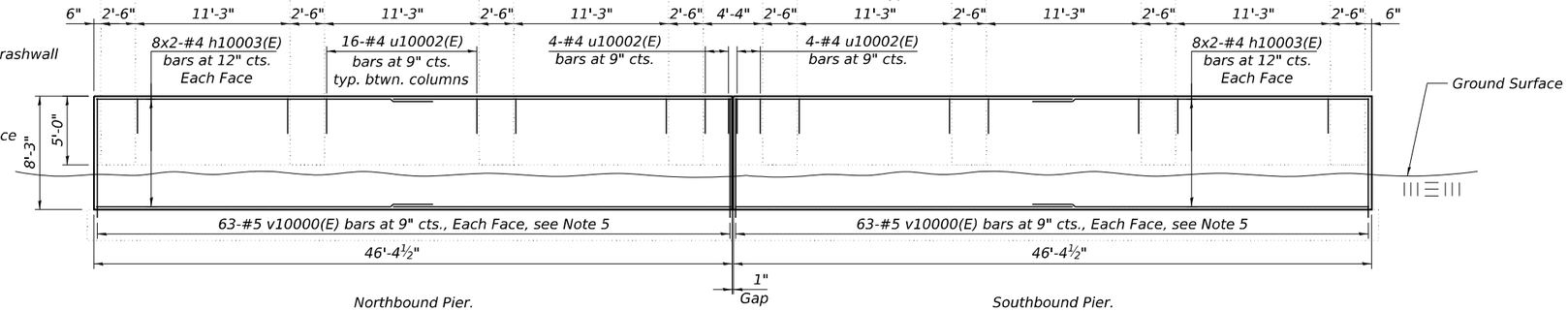

ELEVATION

(Looking South)

Northbound Pier.
Longitudinal and transverse bars shown only.
Southbound Pier similar.
Bridge Seat Reinforcement shown for Northbound Pier only.

Southbound Pier.
Dowels shown only. Northbound Pier similar.
Bridge Seat Reinforcement shown for Southbound Pier only.

MINIMUM BAR LAP

#4 bar = 2'-11"
#5 bar = 3'-7"

BILL OF MATERIAL

Bar	No.	Size	Length	Shape
d10000(E)	504	#6	2'-4½"	
p10000(E)	8	#5	45'-8"	
p10001(E)	8	#5	11'-11"	
p10002(E)	24	#5	29'-0"	
p10003(E)	12	#5	23'-5"	
p10004(E)	6	#5	7'-5"	
p10005(E)	6	#5	39'-5"	
h10000(E)	8	#4	26'-1"	
h10001(E)	8	#4	27'-6"	
h10002(E)	32	#4	28'-8"	
h10003(E)	64	#4	24'-6"	
s10000(E)	104	#4	12'-1"	
s10001(E)	136	#4	8'-4"	
s10002(E)	104	#4	10'-11"	
u10000(E)	138	#4	5'-9"	
u10001(E)	68	#5	6'-1"	
u10002(E)	104	#4	9'-2"	
v10000(E)	252	#5	9'-1"	
Structure Excavation			Cu. Yd.	44
Concrete Structures			Cu. Yd.	111.2
Reinforcement Bars, Epoxy Coated			Pound	11,880

BRIDGE SEAT ELEVATIONS

Girder	Elev.	Step Heights
1	437.09	-
2	437.20	1⅜"
3	437.31	1⅜"
4	437.41	1¼"
5	437.52	1⅜"
6	437.63	1⅜"
7	437.73	1¼"
8	437.70	2¼"
9	437.51	2¼"
10	437.32	2⅛"
11	437.14	2¼"
12	436.95	2¼"
13	436.76	2¼"
14	436.57	-

s(E) AND u(E) BAR SCHEDULE

Bar	"A"	"B"
s10001	3'-11"	6"
u10000	8"	4'-5"
u10001	10"	4'-5"
u10002	2'-11"	3'-4"

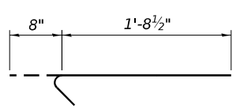

BAR d10000(E)

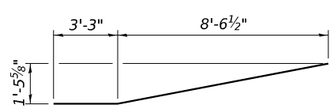

BAR p10001(E)

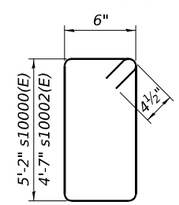

BAR s10000(E) and BAR s10002(E)

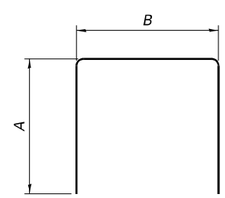

BAR s10001(E), u10000(E), and u10001(E)

MODEL: Sheet View
FILE NAME: pw://hq-pwint01.a-e.transyscorp.com:transyscorp-pw1/Documents/Projects_2020/CH401/401200165/Bridge/304.02 - Sheet Files/0600202-D876N65-080-PIER 10 DETAILS.dgn

TRANSYSTEMS

USER NAME = mbmcwhorter	DESIGNED - JSC	REVISED -	
	CHECKED - IS	REVISED -	
PLOT SCALE =	DRAWN - JSC	REVISED -	
PLOT DATE = 11/13/2025	CHECKED - IS	REVISED -	

STATE OF ILLINOIS
DEPARTMENT OF TRANSPORTATION

PIER 10 DETAILS
STRUCTURE NO. 060-0202

SHEET S-79 OF S-80 SHEETS

F.A.P. RTE.	SECTION	COUNTY	TOTAL SHEETS	SHEET NO.
0002	(103,104)BR-1	MADISON	178	158
		CONTRACT NO. 76N65		
		ILLINOIS	FED. AID PROJECT	

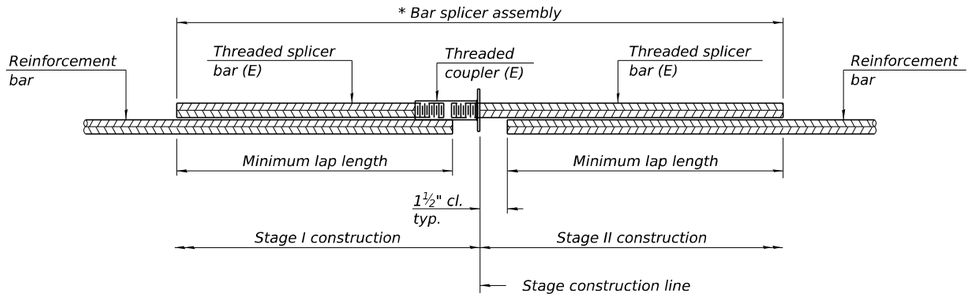

STANDARD BAR SPLICER ASSEMBLY PLAN

Only bar splicer assemblies as presented on the approved QPL list may be used.

Threaded splicer bar length = min. lap length + 1½" + thread length

* Epoxy not required on Bar Splicer Assembly components used in conjunction with black bars.

Location	Bar size	No. assemblies required	Minimum lap length
N. Abutment	#7	12	5'-0"
N. Abutment	#5	4	3'-2"
N. Abutment	#4	2	2'-7"
S. Abutment	#7	12	5'-0"
S. Abutment	#5	4	3'-2"
S. Abutment	#4	2	2'-7"

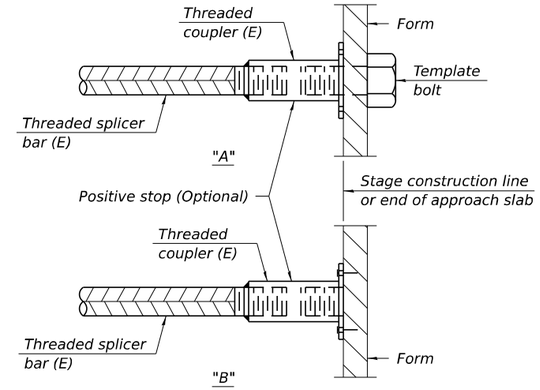

INSTALLATION AND SETTING METHODS

"A" : Set bar splicer assembly by means of a template bolt.
"B" : Set bar splicer assembly by nailing to wood forms or cementing to steel forms.
(E) : Indicates epoxy coating.

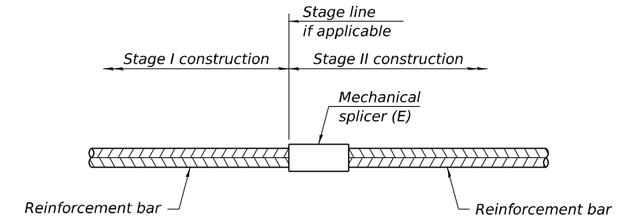

STANDARD MECHANICAL SPLICER

Location	Bar size	No. assemblies required

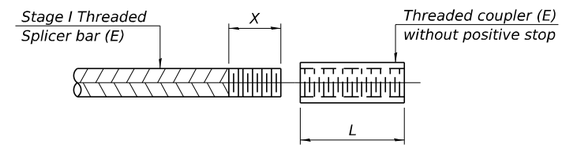

THREADING OF ASSEMBLIES

The threaded length "X" shall be no more than L/2. The bar should be tightened until 0-1 thread(s) is/are exposed.

Notes:
Splicer bars shall be deformed with threaded ends and have a minimum 60 ksi yield strength.
All reinforcement shall be lapped and tied to the splicer bars.
Bar splicer assemblies shall be epoxy coated according to the requirements for reinforcement bars. See Section 508 of the Standard Specifications.
See approved list of bar splicer assemblies and mechanical splicers for alternatives.

BSD-1 4-4-2025

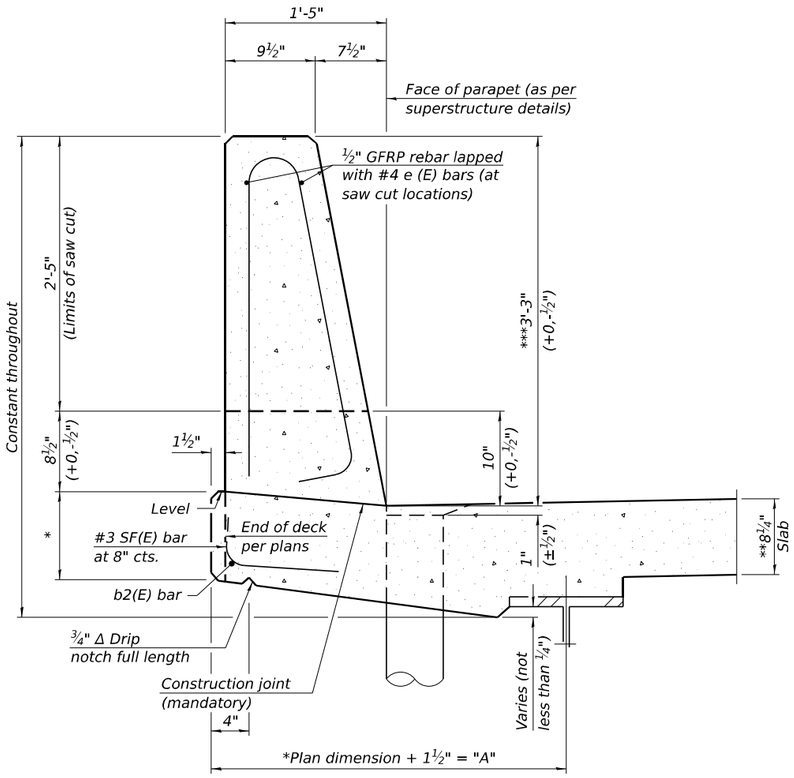

39" CONSTANT-SLOPE PARAPET SECTION

(Showing dimensions, d(E), and ½" Ø GFRP rebar)

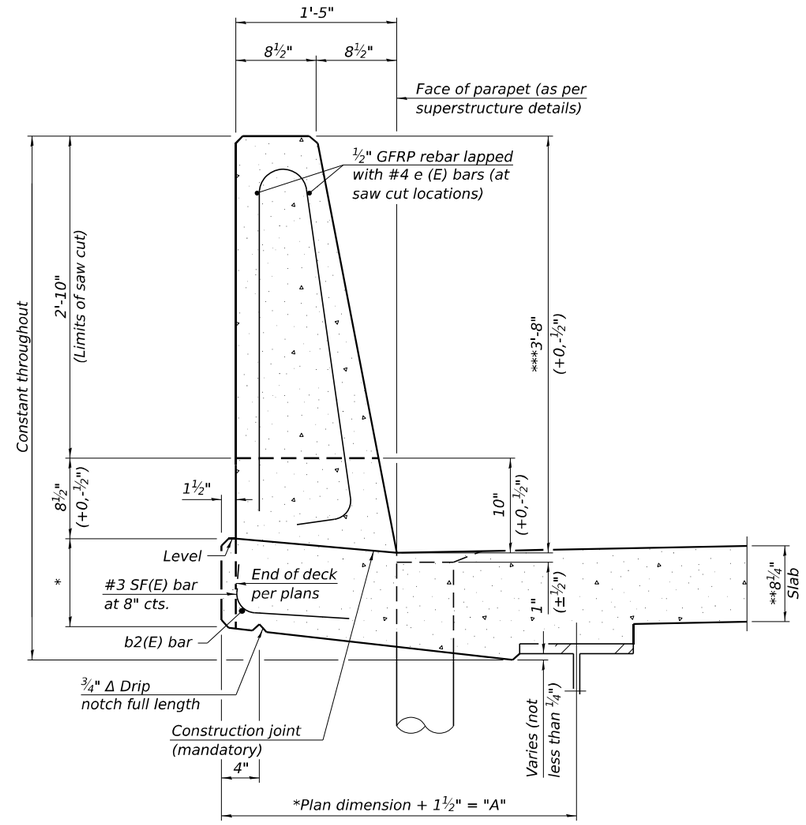

44" CONSTANT-SLOPE PARAPET SECTION

(Showing dimensions, d(E), and ½" Ø GFRP rebar)

* See superstructure details.
** Prior to Grinding
***After Grinding

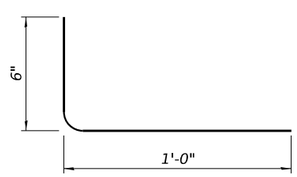

SF(E) BAR

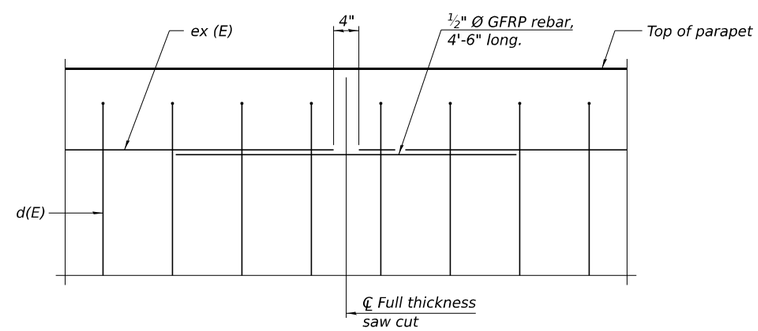

DETAIL - GFRP REBAR STIFFENING ELEVATION

(Place as shown in parapet section at each parapet joint location.)

Notes:
All dimensions shall remain the same as shown on superstructure details, except dimension "A" which is to be revised as shown.
Additional concrete needed to revise dimension "A" (39" and 44" parapets):
Steel Superstructures: 0.00348 cu. yds./ft.
Place full depth aluminum sheets as shown on superstructure details.
Replace all cork joint filler locations with a full thickness saw cut.
Steel and slab superstructures shown. Other superstructure types similar.

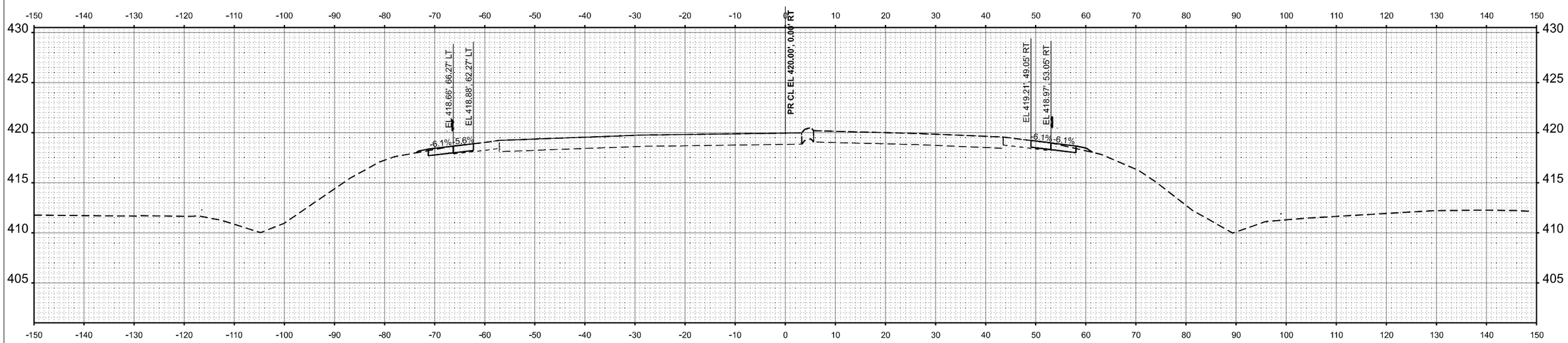

STA 310+50.00

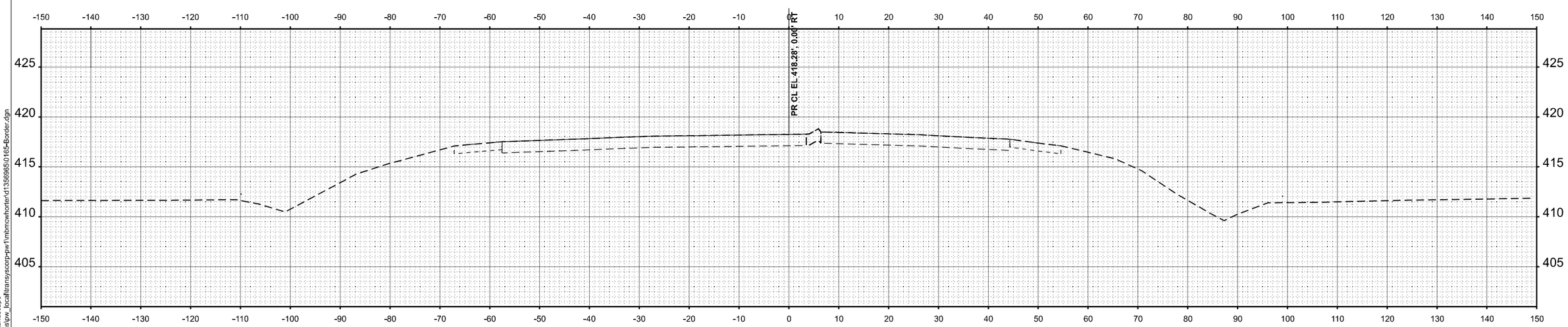

STA 310+00.00

MODEL: Cross Section - Landscape
FILE NAME: c:\transystems\pw_local\transyscorp-pw1\mbmcwhorter\d1356985\0165-Border.dgn

TRANSYSTEMS

USER NAME = mbmcwhorter	DESIGNED - NSP	REVISED -	
	DRAWN - MBM	REVISED -	
	CHECKED - KKY	REVISED -	
PLOT DATE = 10/15/2025	DATE - 10/15/2025	REVISED -	

STATE OF ILLINOIS
DEPARTMENT OF TRANSPORTATION

ILLINOIS 3 OVER PORT DISTRICT RAILYARD
CROSS SECTIONS

SCALE: 10 SCALE | SHEET 1 OF 19 SHEETS | STA. 310+00 TO STA. 310+50

F.A.P RTE.	SECTION	COUNTY	TOTAL SHEETS	SHEET NO.
0002	(103,104)BR-1	MADISON	178	160

CONTRACT NO. 76N65

ILLINOIS | FED. AID PROJECT

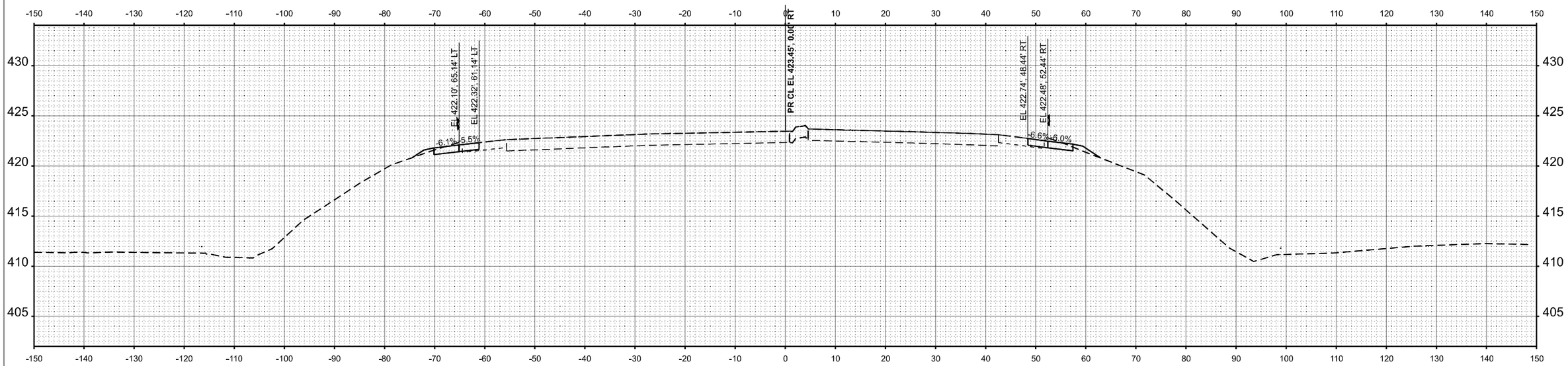

STA 311+50.00

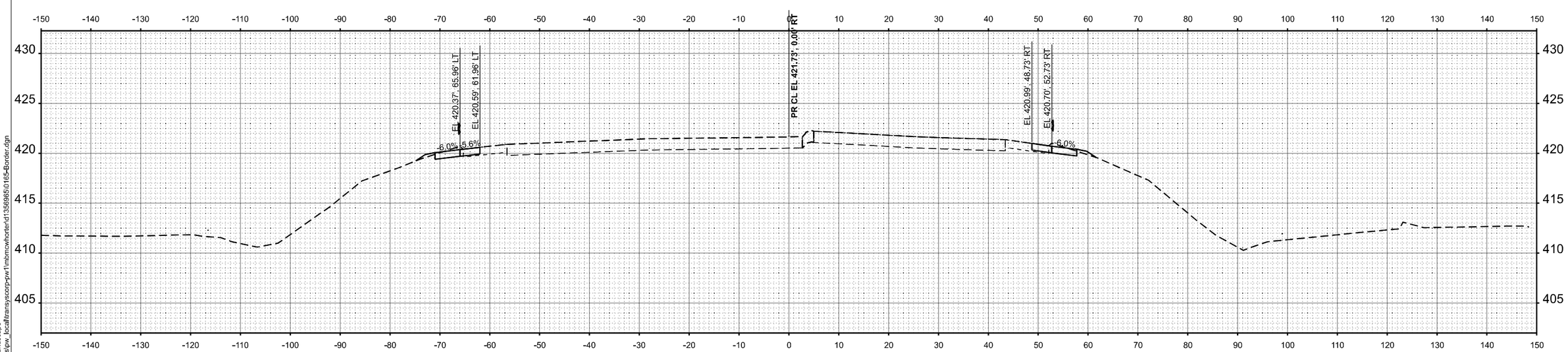

STA 311+00.00

MODEL: Cross Section - Landscape
FILE NAME: c:\transystems\pw_local\transyscorp-pw1\mbmcwhorter\d1356965\0165-Border.dgn

TRANSYSTEMS

USER NAME = mbmcwhorter	DESIGNED - NSP	REVISED -	
	DRAWN - MBM	REVISED -	
	CHECKED - KKY	REVISED -	
PLOT DATE = 10/15/2025	DATE - 10/15/2025	REVISED -	

STATE OF ILLINOIS
DEPARTMENT OF TRANSPORTATION

ILLINOIS 3 OVER PORT DISTRICT RAILYARD
CROSS SECTIONS

SCALE: 10 SCALE | SHEET 2 OF 19 SHEETS | STA. 311+00 TO STA. 311+50

F.A.P RTE.	SECTION	COUNTY	TOTAL SHEETS	SHEET NO.
0002	(103,104)BR-1	MADISON	178	161

CONTRACT NO. 76N65

ILLINOIS | FED. AID PROJECT

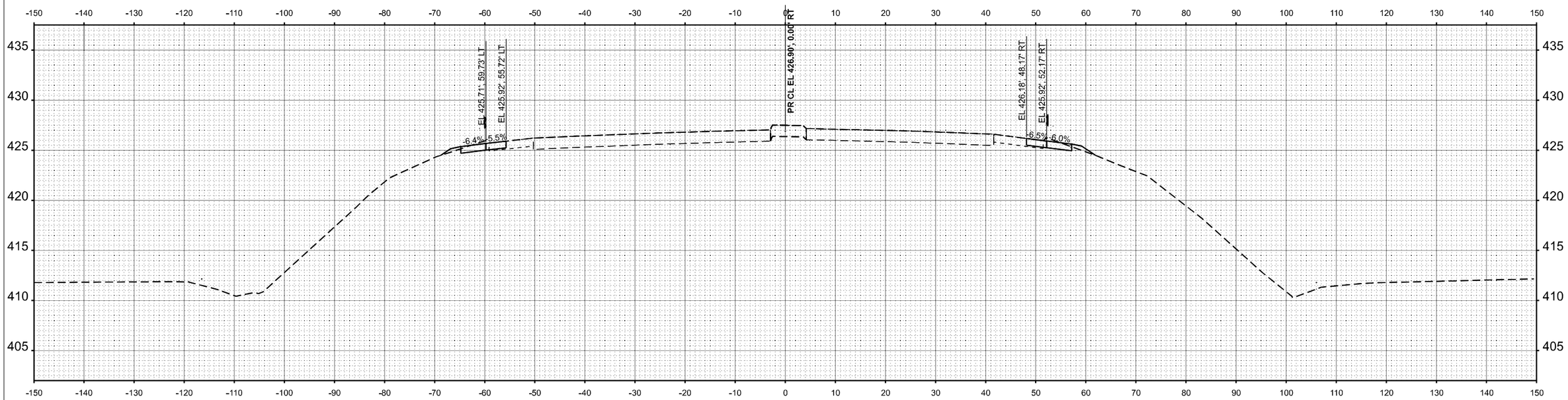

STA 312+50.00

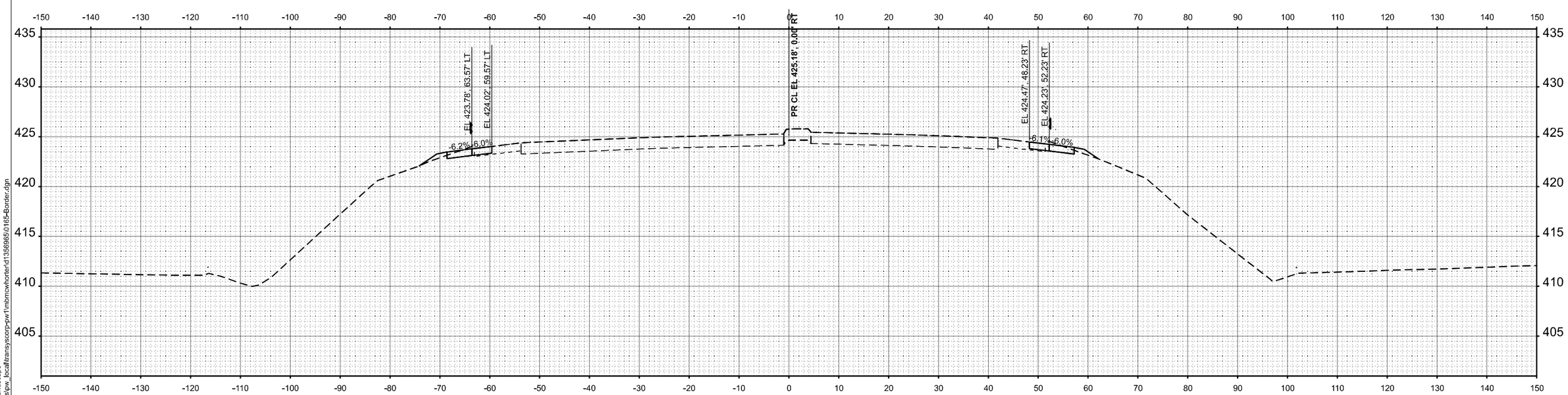

STA 312+00.00

MODEL: Cross Section - Landscape
FILE NAME: c:\transystems\pw_local\transyscorp-pw1\mbmcwhorter\d1356965\0165-Border.dgn

TRANSYSTEMS

USER NAME = mbmcwhorter	DESIGNED - NSP	REVISED -	
	DRAWN - MBM	REVISED -	
	CHECKED - KKY	REVISED -	
PLOT DATE = 10/15/2025	DATE - 10/15/2025	REVISED -	

STATE OF ILLINOIS
DEPARTMENT OF TRANSPORTATION

ILLINOIS 3 OVER PORT DISTRICT RAILYARD
CROSS SECTIONS

SCALE: 10 SCALE | SHEET 3 OF 19 SHEETS | STA. 312+00 TO STA. 312+50

F.A.P RTE.	SECTION	COUNTY	TOTAL SHEETS	SHEET NO.
0002	(103,104)BR-1	MADISON	178	162

CONTRACT NO. 76N65

ILLINOIS | FED. AID PROJECT

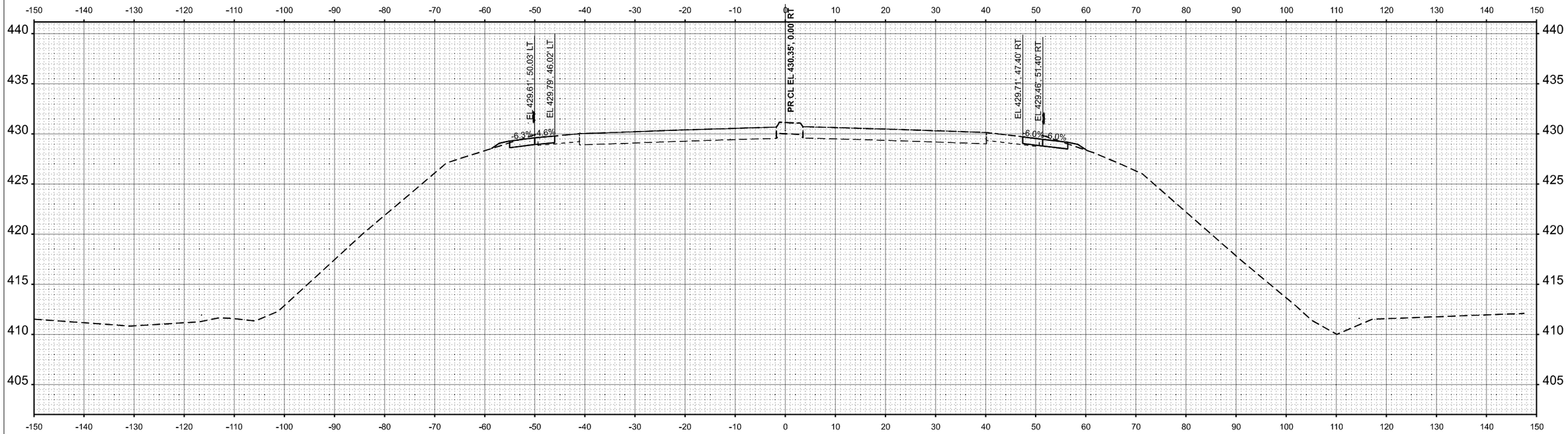

STA 313+50.00

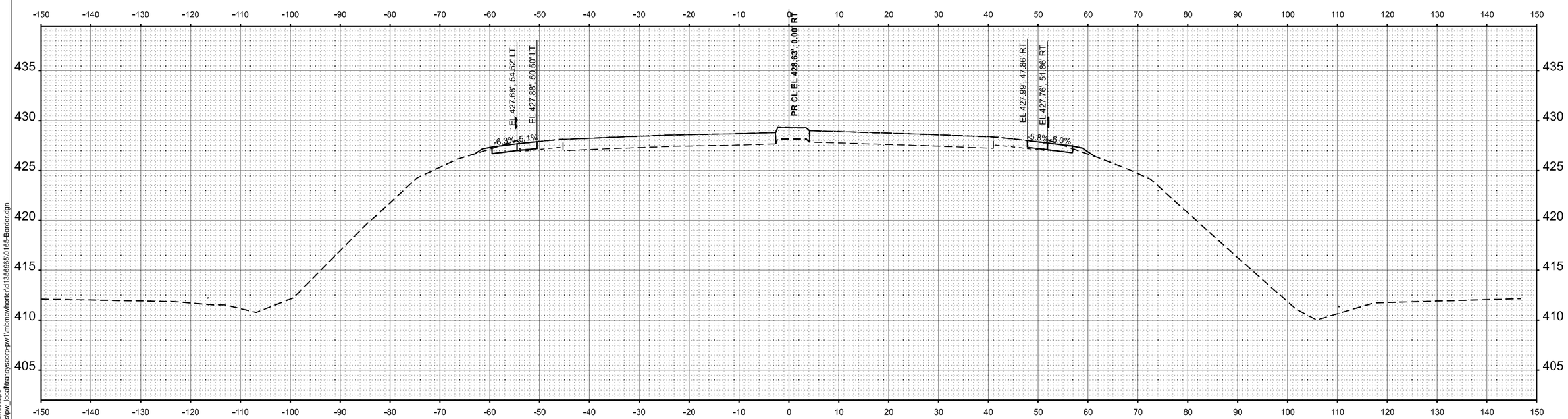

STA 313+00.00

MODEL: Cross Section - Landscape
FILE NAME: c:\transystems\pw_local\transyscorp-pw1\mbmcwhorter\d1356965\0165-Border.dgn

TRANSYSTEMS	USER NAME = mbmcwhorter	DESIGNED - NSP	REVISED -	STATE OF ILLINOIS DEPARTMENT OF TRANSPORTATION	ILLINOIS 3 OVER PORT DISTRICT RAILYARD CROSS SECTIONS				F.A.P RTE.	SECTION	COUNTY	TOTAL SHEETS	SHEET NO.
		DRAWN - MBM	REVISED -						0002	(103,104)BR-1	MADISON	178	163
		CHECKED - KKY	REVISED -								CONTRACT NO. 76N65		
	PLOT DATE = 10/15/2025	DATE - 10/15/2025	REVISED -		SCALE: 10 SCALE	SHEET 4 OF 19 SHEETS	STA. 313+00	TO STA. 313+50		ILLINOIS	FED. AID PROJECT		

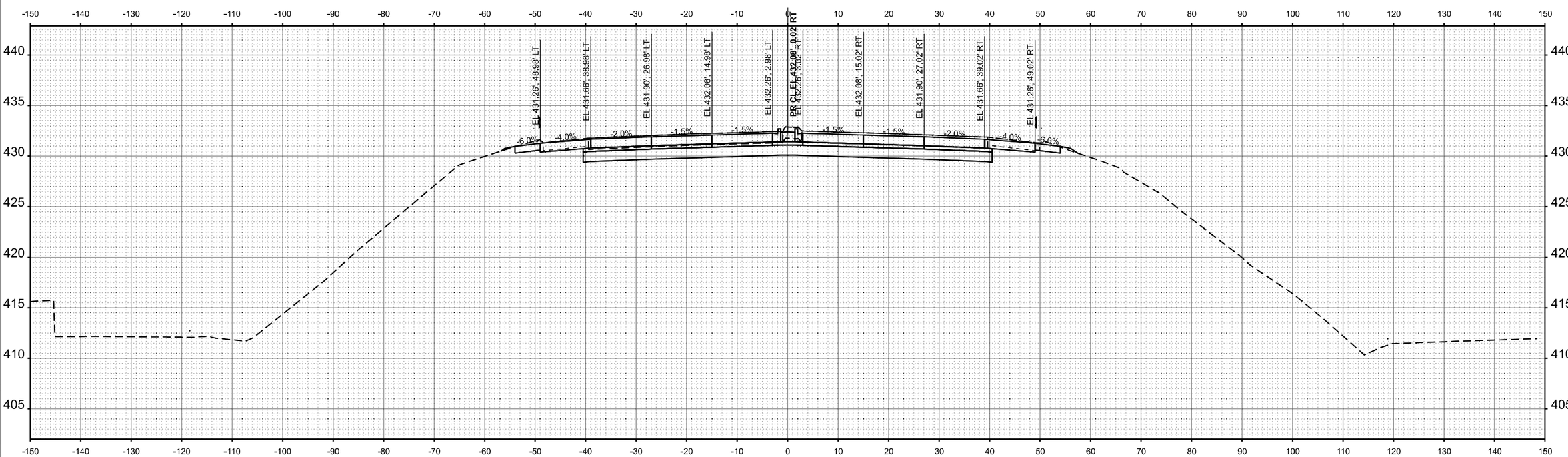

STA 314+00.00

MODEL: Cross Section - Landscape
FILE NAME: c:\transystemspw_local\transyscorp-pw1\mbmcwhorter\d1356965\0165-Border.dgn

TRANSYSTEMS

USER NAME = mbmcwhorter	DESIGNED - NSP	REVISED -	
	DRAWN - MBM	REVISED -	
	CHECKED - KKY	REVISED -	
PLOT DATE = 10/15/2025	DATE - 10/15/2025	REVISED -	

STATE OF ILLINOIS
DEPARTMENT OF TRANSPORTATION

ILLINOIS 3 OVER PORT DISTRICT RAILYARD
CROSS SECTIONS

SCALE: 10 SCALE | SHEET 5 OF 19 SHEETS | STA. 314+00 TO STA. 314+00

F.A.P RTE.	SECTION	COUNTY	TOTAL SHEETS	SHEET NO.
0002	(103,104)BR-1	MADISON	178	164
		CONTRACT NO. 76N65		
		ILLINOIS	FED. AID PROJECT	

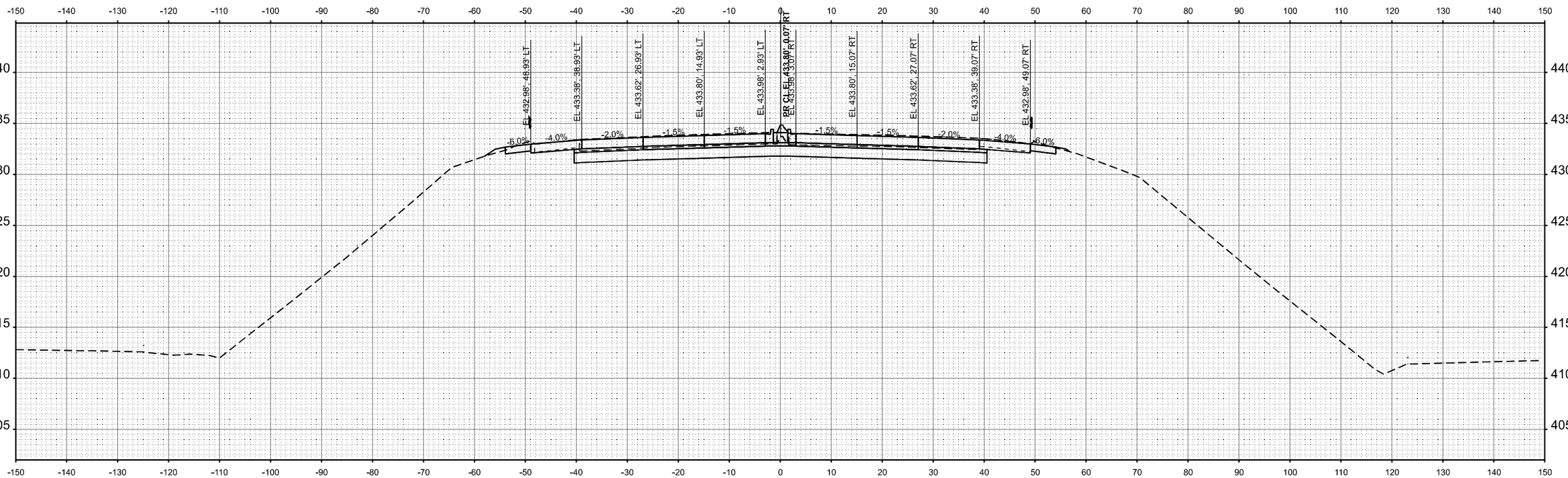

STA 314+50.00

MODEL: Cross Section - Landscape
FILE NAME: c:\transystems\pw_local\transyscorp-pw1\mbmcwhorter\d1356965\0165-Border.dgn

TRANSYSTEMS

USER NAME = mbmcwhorter	DESIGNED - NSP	REVISED -	
	DRAWN - MBM	REVISED -	
	CHECKED - KKY	REVISED -	
PLOT DATE = 10/15/2025	DATE - 10/15/2025	REVISED -	

STATE OF ILLINOIS
DEPARTMENT OF TRANSPORTATION

ILLINOIS 3 OVER PORT DISTRICT RAILYARD
CROSS SECTIONS

SCALE: 10 SCALE | SHEET 6 OF 19 SHEETS | STA. 314+50 TO STA. 314+50

F.A.P RTE.	SECTION	COUNTY	TOTAL SHEETS	SHEET NO.
0002	(103,104)BR-1	MADISON	178	165

CONTRACT NO. 76N65

ILLINOIS | FED. AID PROJECT

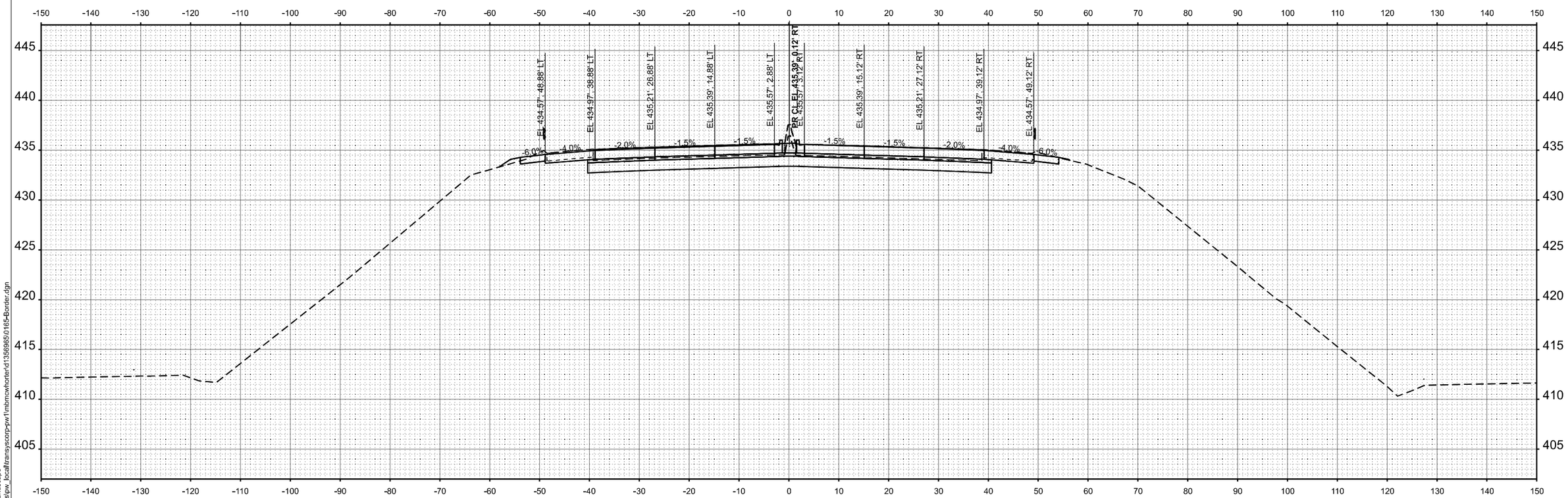

STA 315+00.00

MODEL: Cross Section - Landscape
FILE NAME: c:\transystems\pw_local\transyscorp-pw11\mbmcwhorter\d1356965\0165-Border.dgn

TRANSYSTEMS

USER NAME = mbmcwhorter	DESIGNED - NSP	REVISED -	
	DRAWN - MBM	REVISED -	
	CHECKED - KKY	REVISED -	
PLOT DATE = 10/15/2025	DATE - 10/15/2025	REVISED -	

STATE OF ILLINOIS
DEPARTMENT OF TRANSPORTATION

ILLINOIS 3 OVER PORT DISTRICT RAILYARD
CROSS SECTIONS

SCALE: 10 SCALE | SHEET 7 OF 19 SHEETS | STA. 315+00 TO STA. 315+00

F.A.P RTE.	SECTION	COUNTY	TOTAL SHEETS	SHEET NO.
0002	(103,104)BR-1	MADISON	178	166

CONTRACT NO. 76N65

ILLINOIS | FED. AID PROJECT

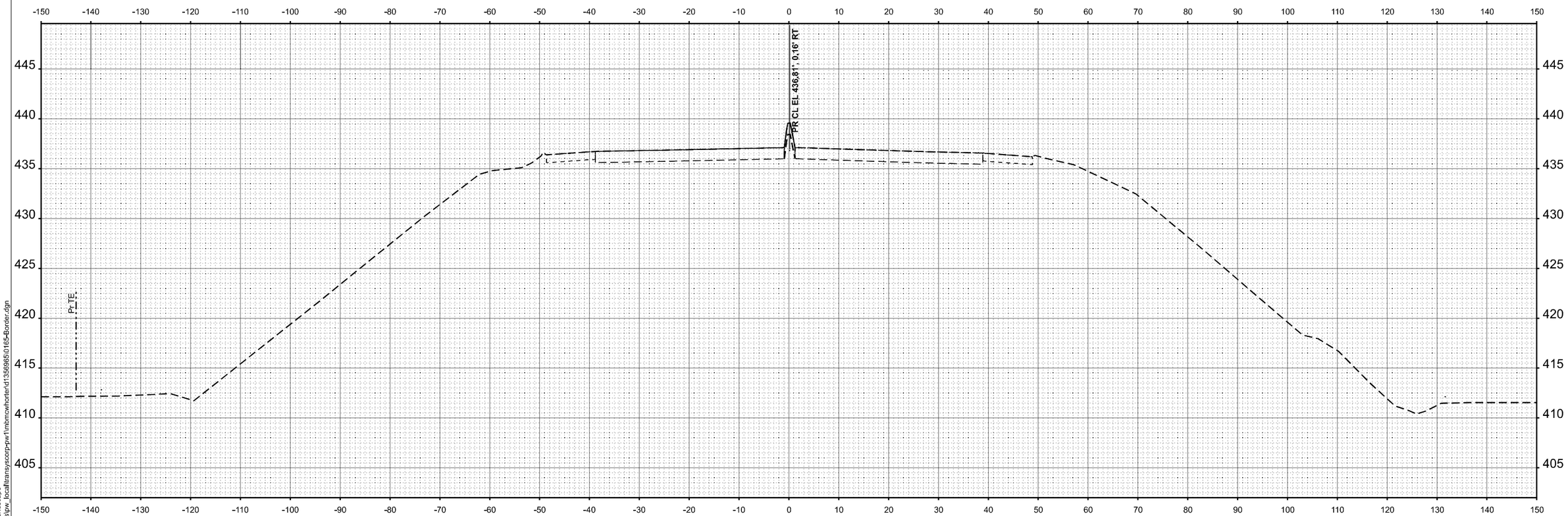

STA 315+50.00

MODEL: Cross Section - Landscape
FILE NAME: c:\transystems\pw_localtransyscorp-pw1\mbmcwhorter\d1356965\0165-Border.dgn

TRANSYSTEMS

USER NAME = mbmcwhorter	DESIGNED - NSP	REVISED -	
	DRAWN - MBM	REVISED -	
	CHECKED - KKY	REVISED -	
PLOT DATE = 10/15/2025	DATE - 10/15/2025	REVISED -	

STATE OF ILLINOIS
DEPARTMENT OF TRANSPORTATION

ILLINOIS 3 OVER PORT DISTRICT RAILYARD
CROSS SECTIONS

SCALE: 10 SCALE | SHEET 8 OF 19 SHEETS | STA. 315+50 TO STA. 315+50

F.A.P RTE.	SECTION	COUNTY	TOTAL SHEETS	SHEET NO.
0002	(103,104)BR-1	MADISON	178	167

CONTRACT NO. 76N65

ILLINOIS | FED. AID PROJECT

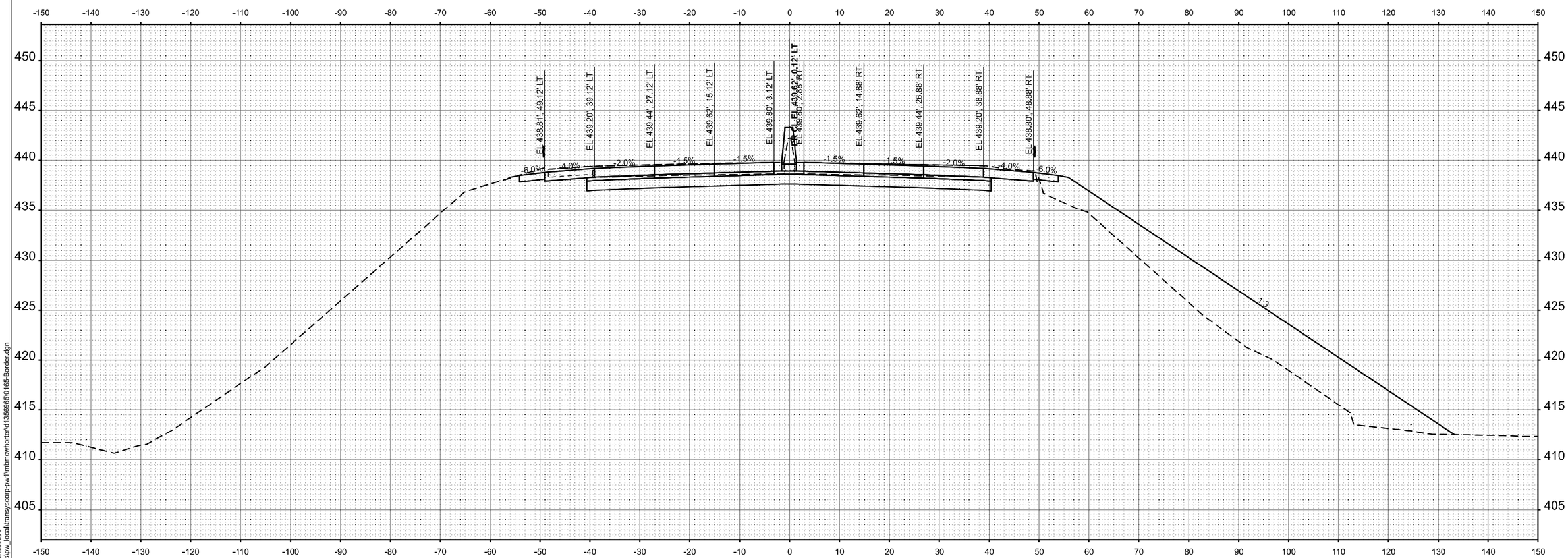

STA 322+00.00

MODEL: Cross Section - Landscape
FILE NAME: c:\transystems\pw_local\transyscorp-pw11\mbmcwhorter\d1356985\0165-Border.dgn

TRANSYSTEMS

USER NAME = mbmcwhorter	DESIGNED - NSP	REVISED -	
	DRAWN - MBM	REVISED -	
	CHECKED - KKY	REVISED -	
PLOT DATE = 10/15/2025	DATE - 10/15/2025	REVISED -	

STATE OF ILLINOIS
DEPARTMENT OF TRANSPORTATION

ILLINOIS 3 OVER PORT DISTRICT RAILYARD
CROSS SECTIONS

SCALE: 10 SCALE | SHEET 9 OF 19 SHEETS | STA. 322+00 TO STA. 322+00

F.A.P RTE.	SECTION	COUNTY	TOTAL SHEETS	SHEET NO.
0002	(103,104)BR-1	MADISON	178	168
		CONTRACT NO. 76N65		
		ILLINOIS	FED. AID PROJECT	

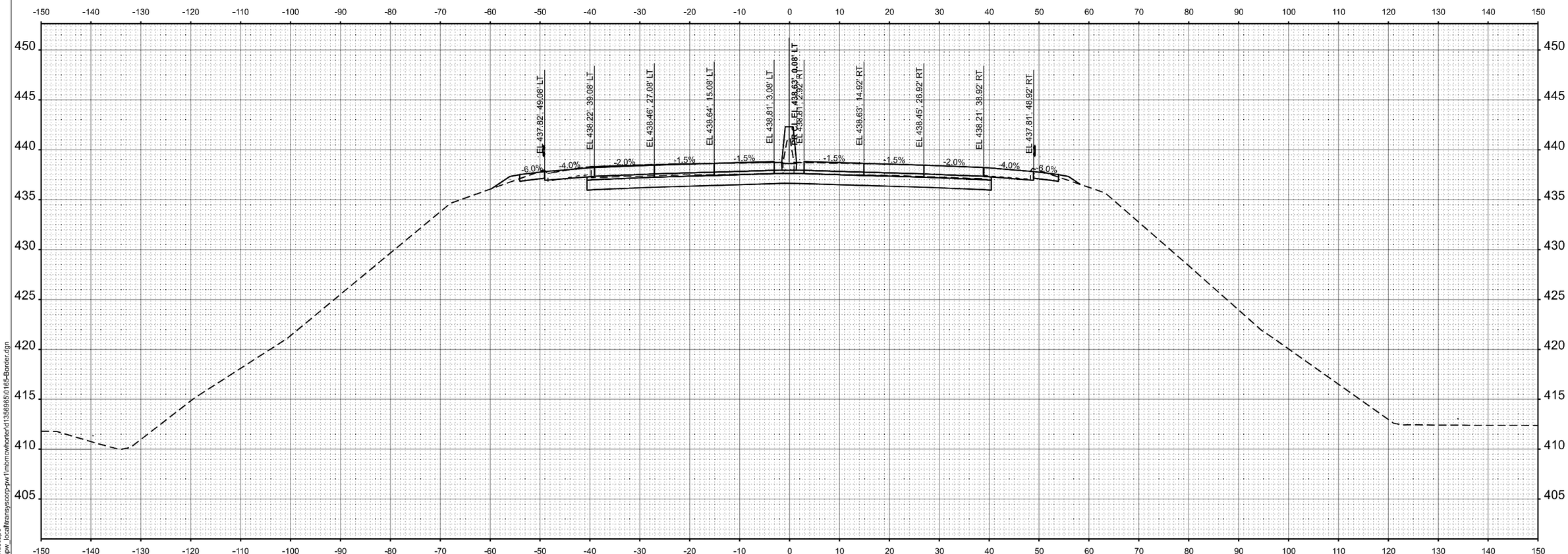

STA 322+50.00

MODEL: Cross Section - Landscape
FILE NAME: c:\transystems\pw_local\transyscorp-pw1\mbmcwhorter\d13569651\0165-Border.dgn

TRANSYSTEMS

USER NAME = mbmcwhorter	DESIGNED - NSP	REVISED -	
	DRAWN - MBM	REVISED -	
	CHECKED - KKY	REVISED -	
PLOT DATE = 10/15/2025	DATE - 10/15/2025	REVISED -	

STATE OF ILLINOIS
DEPARTMENT OF TRANSPORTATION

ILLINOIS 3 OVER PORT DISTRICT RAILYARD
CROSS SECTIONS

SCALE: 10 SCALE | SHEET 10 OF 19 SHEETS | STA. 322+50 TO STA. 322+50

F.A.P RTE.	SECTION	COUNTY	TOTAL SHEETS	SHEET NO.
0002	(103,104)BR-1	MADISON	178	169

CONTRACT NO. 76N65

ILLINOIS | FED. AID PROJECT

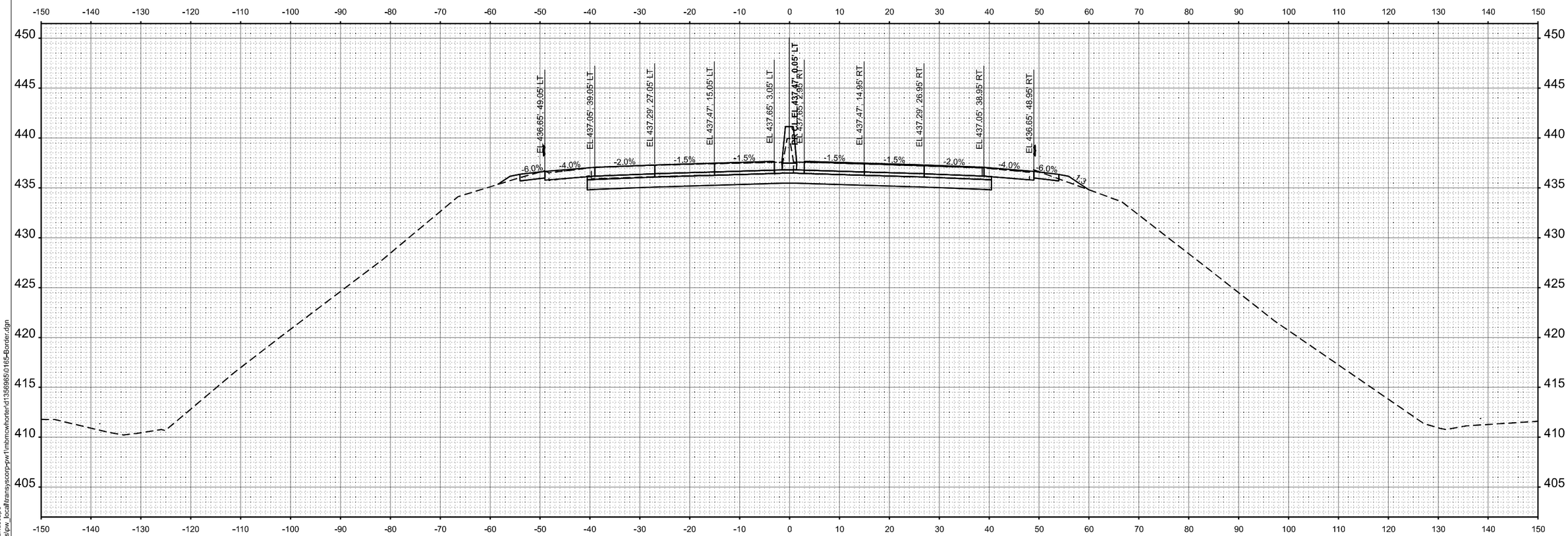

STA 323+00.00

MODEL: Cross Section - Landscape
FILE NAME: c:\transystems\pw_local\transyscorp-pw11\mbmcwhorter\d1356985\0165-Border.dgn

TRANSYSTEMS

USER NAME = mbmcwhorter	DESIGNED - NSP	REVISED -	
	DRAWN - MBM	REVISED -	
	CHECKED - KKY	REVISED -	
PLOT DATE = 10/15/2025	DATE - 10/15/2025	REVISED -	

STATE OF ILLINOIS
DEPARTMENT OF TRANSPORTATION

ILLINOIS 3 OVER PORT DISTRICT RAILYARD
CROSS SECTIONS

SCALE: 10 SCALE | SHEET 11 OF 19 SHEETS | STA. 323+00 TO STA. 323+00

F.A.P RTE.	SECTION	COUNTY	TOTAL SHEETS	SHEET NO.
0002	(103,104)BR-1	MADISON	178	170

CONTRACT NO. 76N65

ILLINOIS | FED. AID PROJECT

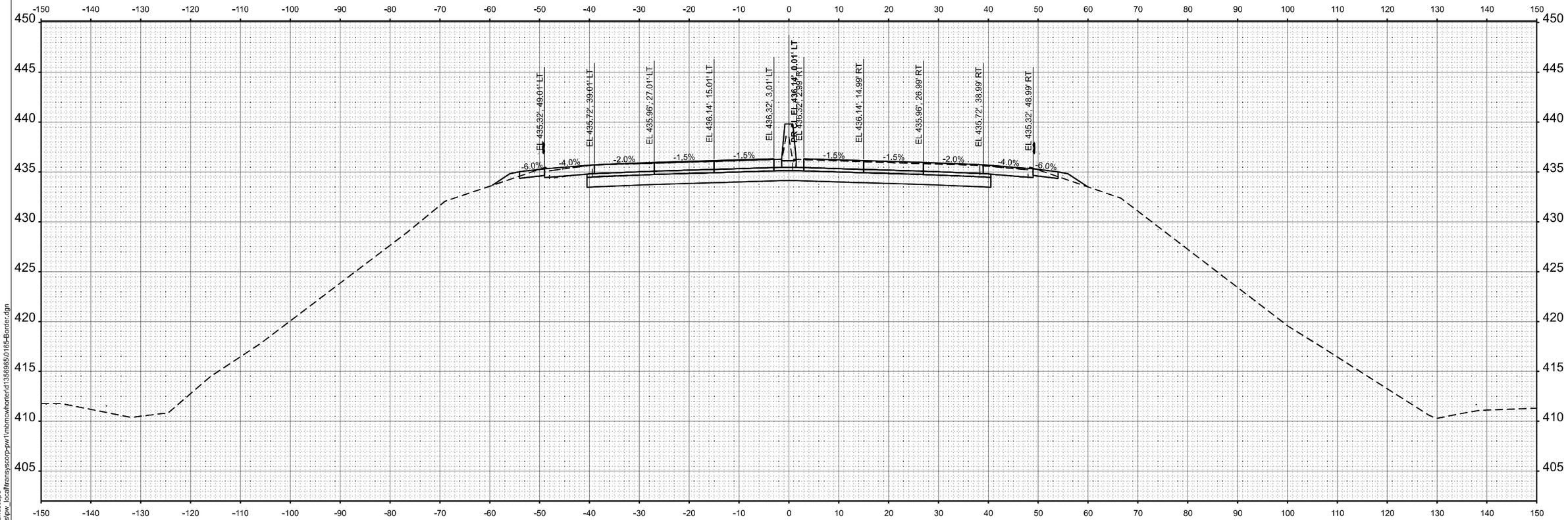

STA 323+50.00

MODEL: Cross Section - Landscape
FILE NAME: c:\transystems\pw_local\transyscorp-pw1\mbmcwhorter\d1356965\0165-Border.dgn

TRANSYSTEMS

USER NAME = mbmcwhorter	DESIGNED - NSP	REVISED -	
	DRAWN - MBM	REVISED -	
	CHECKED - KKY	REVISED -	
PLOT DATE = 10/15/2025	DATE - 10/15/2025	REVISED -	

STATE OF ILLINOIS
DEPARTMENT OF TRANSPORTATION

ILLINOIS 3 OVER PORT DISTRICT RAILYARD
CROSS SECTIONS

SCALE: 10 SCALE | SHEET 12 OF 19 SHEETS | STA. 323+50 TO STA. 323+50

F.A.P RTE.	SECTION	COUNTY	TOTAL SHEETS	SHEET NO.
0002	(103,104)BR-1	MADISON	178	171
		CONTRACT NO. 76N65		
		ILLINOIS	FED. AID PROJECT	

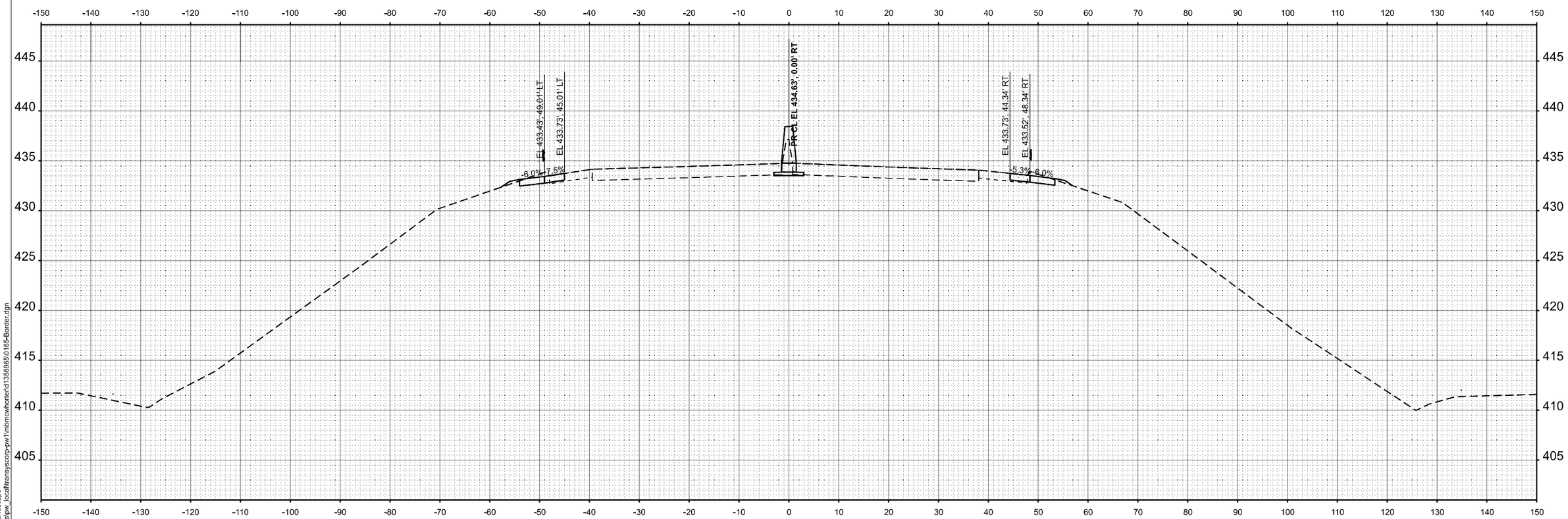

STA 324+00.00

MODEL: Cross Section - Landscape
FILE NAME: c:\transystems\pw_local\transyscorp-pw1\mbmcwhorter\d13569651\0165-Border.dgn

TRANSYSTEMS

USER NAME = mbmcwhorter	DESIGNED - NSP	REVISED -	
	DRAWN - MBM	REVISED -	
	CHECKED - KKY	REVISED -	
PLOT DATE = 10/15/2025	DATE - 10/15/2025	REVISED -	

STATE OF ILLINOIS
DEPARTMENT OF TRANSPORTATION

ILLINOIS 3 OVER PORT DISTRICT RAILYARD
CROSS SECTIONS

SCALE: 10 SCALE | SHEET 13 OF 19 SHEETS | STA. 324+00 TO STA. 324+00

F.A.P RTE.	SECTION	COUNTY	TOTAL SHEETS	SHEET NO.
0002	(103,104)BR-1	MADISON	178	172

CONTRACT NO. 76N65

ILLINOIS | FED. AID PROJECT

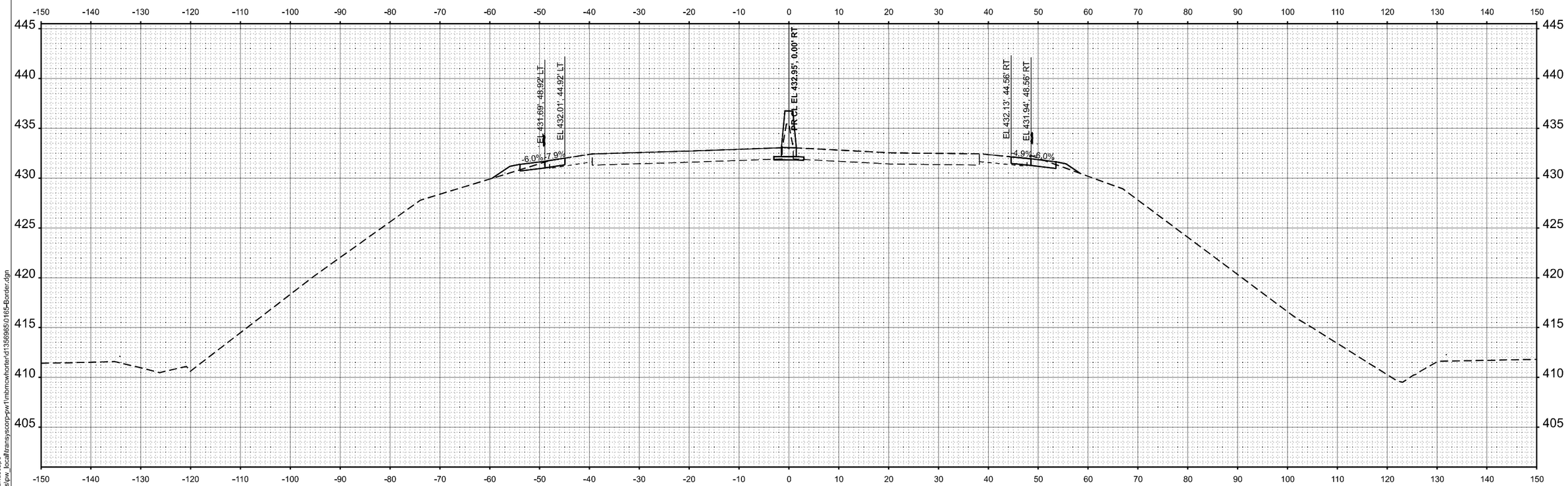

STA 324+50.00

MODEL: Cross Section - Landscape
FILE NAME: c:\transystems\pw_local\transyscorp-pw1\mbmcwhorter\d1356965\0165-Border.dgn

TRANSYSTEMS

USER NAME = mbmcwhorter	DESIGNED - NSP	REVISED -	
	DRAWN - MBM	REVISED -	
	CHECKED - KKY	REVISED -	
PLOT DATE = 10/15/2025	DATE - 10/15/2025	REVISED -	

STATE OF ILLINOIS
DEPARTMENT OF TRANSPORTATION

ILLINOIS 3 OVER PORT DISTRICT RAILYARD
CROSS SECTIONS

SCALE: 10 SCALE | SHEET 14 OF 19 SHEETS | STA. 324+50 TO STA. 324+50

F.A.P RTE.	SECTION	COUNTY	TOTAL SHEETS	SHEET NO.
0002	(103,104)BR-1	MADISON	178	173
		CONTRACT NO. 76N65		
		ILLINOIS	FED. AID PROJECT	

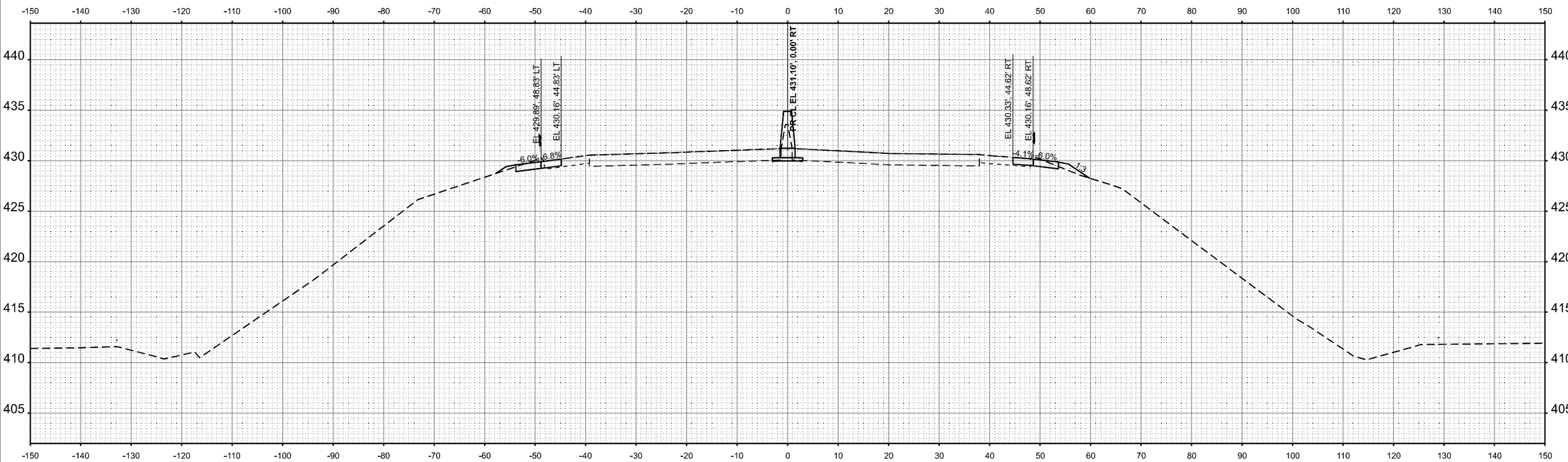

STA 325+00.00

MODEL: Cross Section - Landscape
FILE NAME: c:\transystems\pw_local\transyscorp-pw1\mbmcwhorter\d1356965\0165-Border.dgn

TRANSYSTEMS

USER NAME = mbmcwhorter	DESIGNED - NSP	REVISED -	
	DRAWN - MBM	REVISED -	
	CHECKED - KKY	REVISED -	
PLOT DATE = 10/15/2025	DATE - 10/15/2025	REVISED -	

STATE OF ILLINOIS
DEPARTMENT OF TRANSPORTATION

ILLINOIS 3 OVER PORT DISTRICT RAILYARD
CROSS SECTIONS

SCALE: 10 SCALE | SHEET 15 OF 19 SHEETS | STA. 325+00 TO STA. 325+00

F.A.P RTE.	SECTION	COUNTY	TOTAL SHEETS	SHEET NO.
0002	(103,104)BR-1	MADISON	178	174

CONTRACT NO. 76N65

ILLINOIS | FED. AID PROJECT

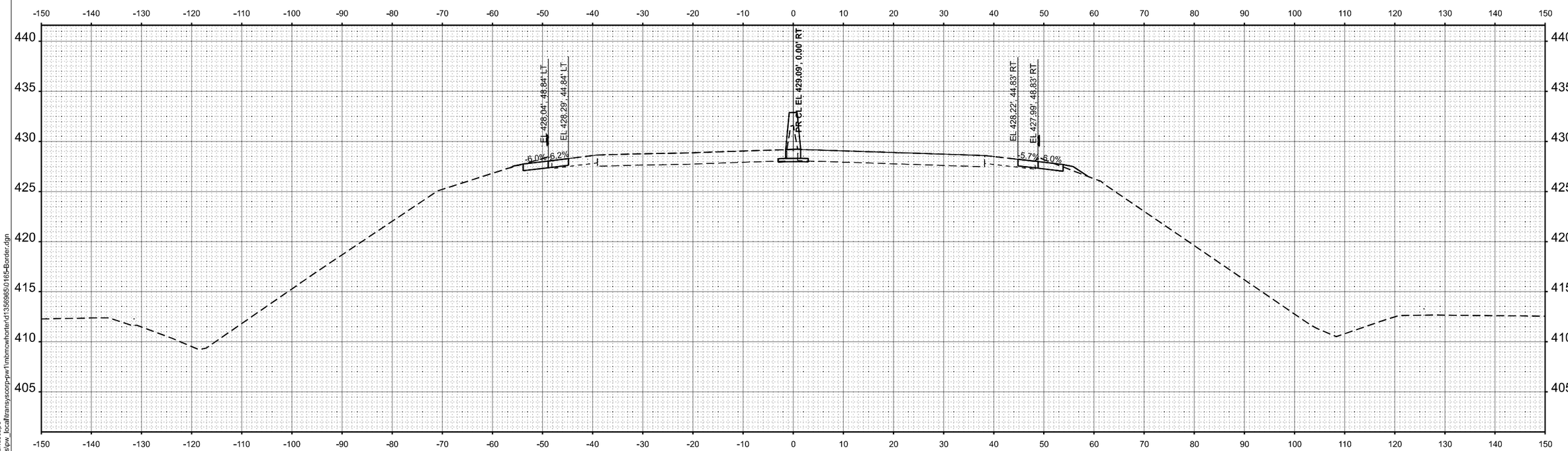

STA 325+50.00

MODEL: Cross Section - Landscape
FILE NAME: c:\transystems\pw_local\transyscorp-pw1\mbmcwhorter\d1356965\0165-Border.dgn

TRANSYSTEMS

USER NAME = mbmcwhorter	DESIGNED - NSP	REVISED -	
	DRAWN - MBM	REVISED -	
	CHECKED - KKY	REVISED -	
PLOT DATE = 10/15/2025	DATE - 10/15/2025	REVISED -	

STATE OF ILLINOIS
DEPARTMENT OF TRANSPORTATION

ILLINOIS 3 OVER PORT DISTRICT RAILYARD
CROSS SECTIONS

SCALE: 10 SCALE | SHEET 16 OF 19 SHEETS | STA. 325+50 TO STA. 325+50

F.A.P RTE.	SECTION	COUNTY	TOTAL SHEETS	SHEET NO.
0002	(103,104)BR-1	MADISON	178	175
		CONTRACT NO. 76N65		
		ILLINOIS	FED. AID PROJECT	

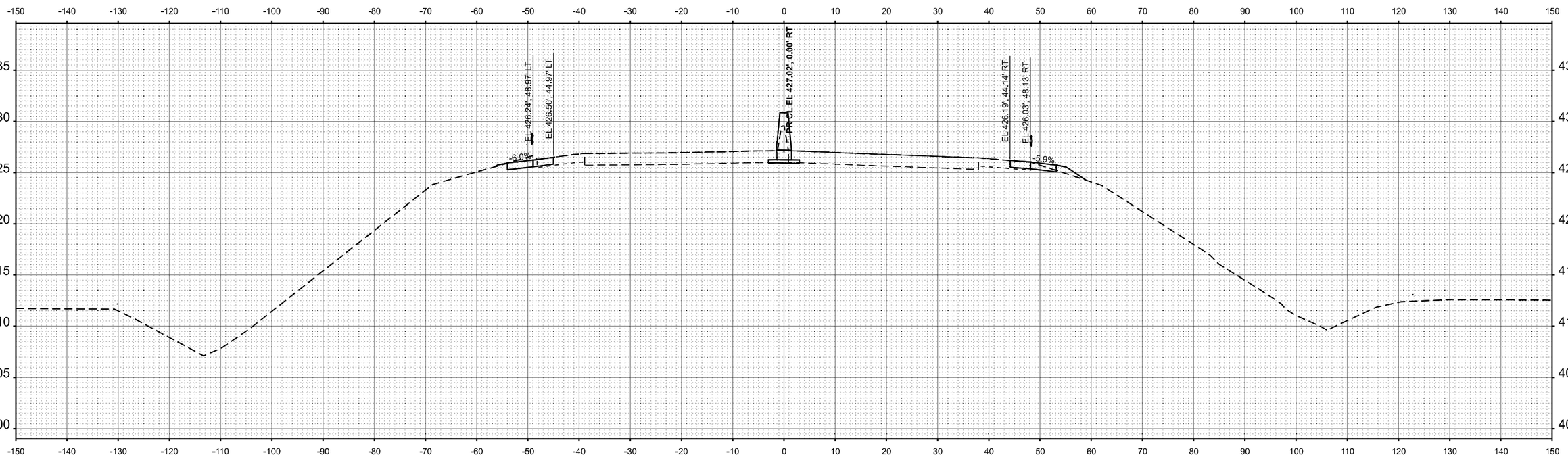

STA 326+00.00

MODEL: Cross Section - Landscape
FILE NAME: c:\transystems\pw_local\transyscorp-pw1\mbmcwhorter\d1356965\0165-Border.dgn

TRANSYSTEMS

USER NAME = mbmcwhorter	DESIGNED - NSP	REVISED -	
	DRAWN - MBM	REVISED -	
	CHECKED - KKY	REVISED -	
PLOT DATE = 10/15/2025	DATE - 10/15/2025	REVISED -	

STATE OF ILLINOIS
DEPARTMENT OF TRANSPORTATION

ILLINOIS 3 OVER PORT DISTRICT RAILYARD
CROSS SECTIONS

SCALE: 10 SCALE | SHEET 17 OF 19 SHEETS | STA. 326+00 TO STA. 326+00

F.A.P RTE.	SECTION	COUNTY	TOTAL SHEETS	SHEET NO.
0002	(103,104)BR-1	MADISON	178	176

CONTRACT NO. 76N65

ILLINOIS | FED. AID PROJECT

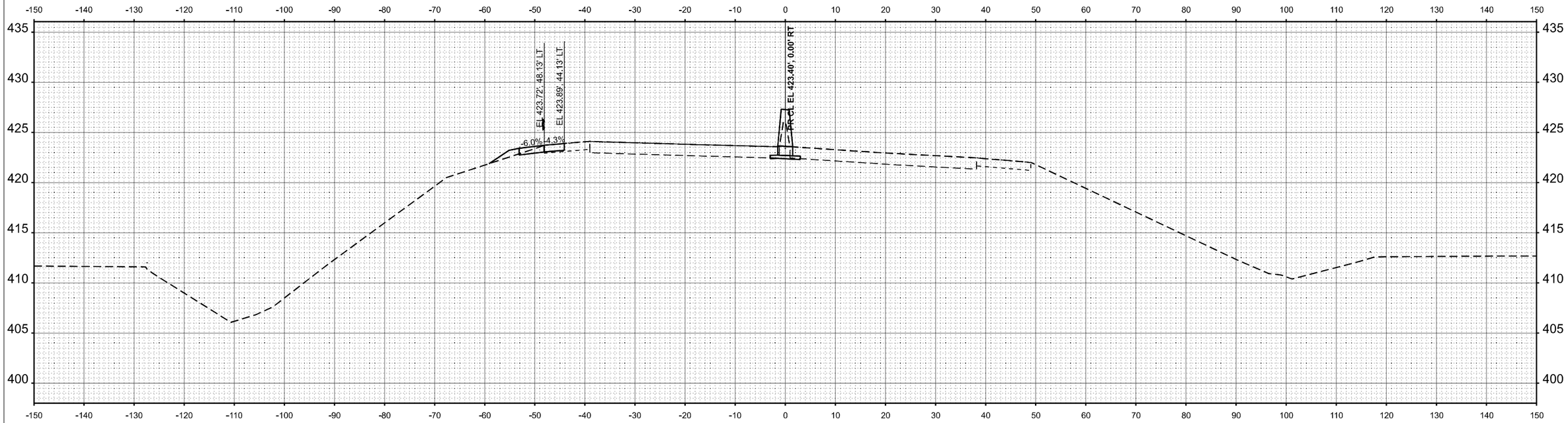

STA 327+00.00

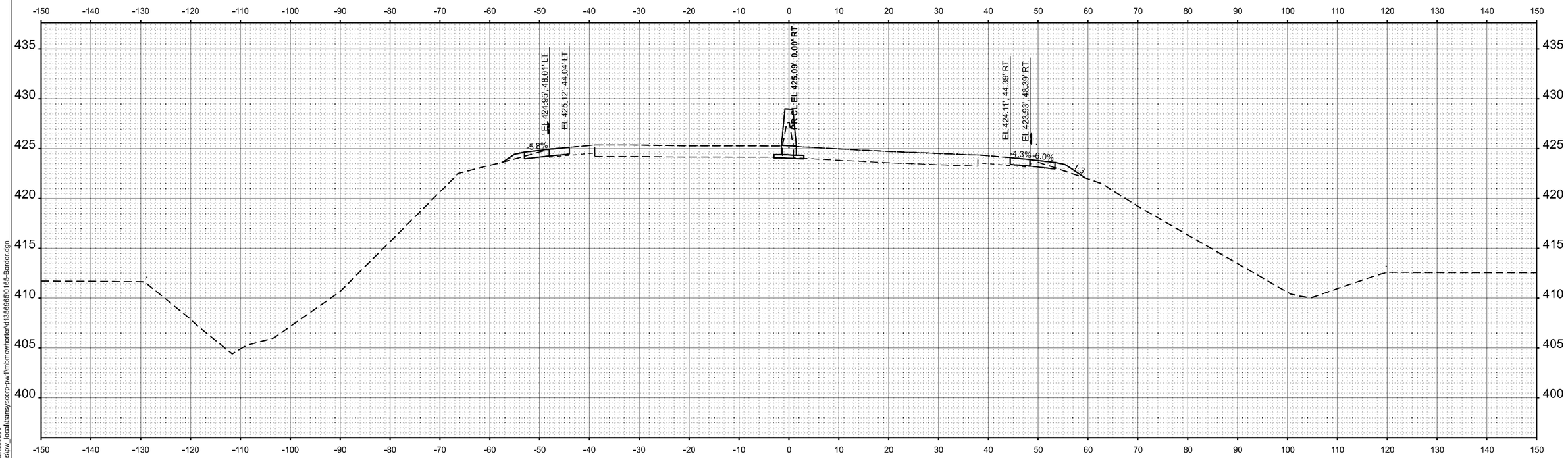

STA 326+50.00

MODEL: Cross Section - Landscape
FILE NAME: c:\transystems\pw_local\transyscorp-pw1\mbmcwhorter\d1356985\0165-Border.dgn

TRANSYSTEMS	USER NAME = mbmcwhorter	DESIGNED - NSP	REVISED -	STATE OF ILLINOIS DEPARTMENT OF TRANSPORTATION	ILLINOIS 3 OVER PORT DISTRICT RAILYARD CROSS SECTIONS
		DRAWN - MBM	REVISED -		
		CHECKED - KKY	REVISED -		
	PLOT DATE = 10/15/2025	DATE - 10/15/2025	REVISED -		SCALE: 10 SCALE SHEET 18 OF 19 SHEETS STA. 326+50 TO STA. 327+00

F.A.P RTE.	SECTION	COUNTY	TOTAL SHEETS	SHEET NO.
0002	(103,104)BR-1	MADISON	178	177
		CONTRACT NO. 76N65		
		ILLINOIS	FED. AID PROJECT	

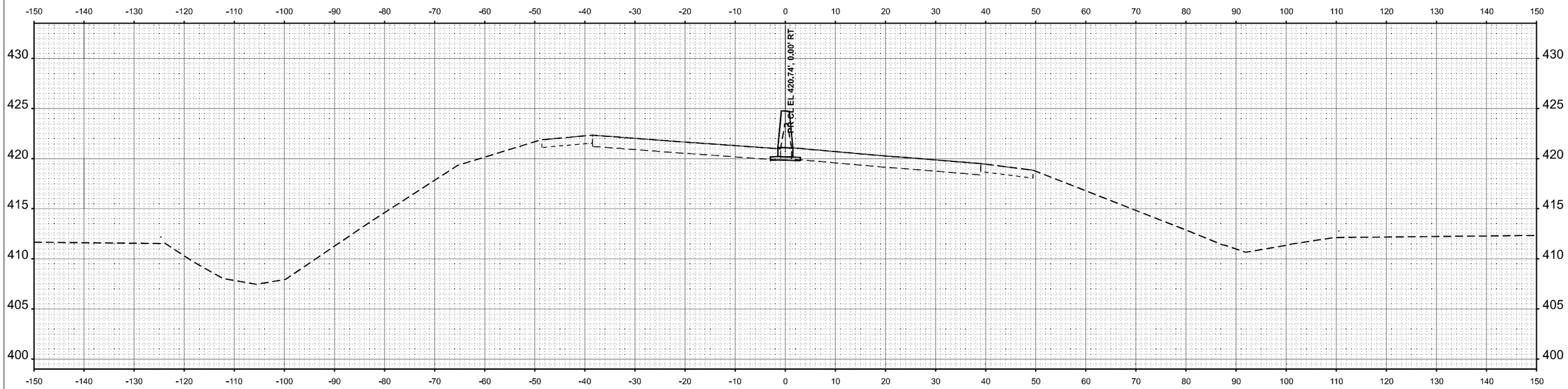

STA 328+00.00

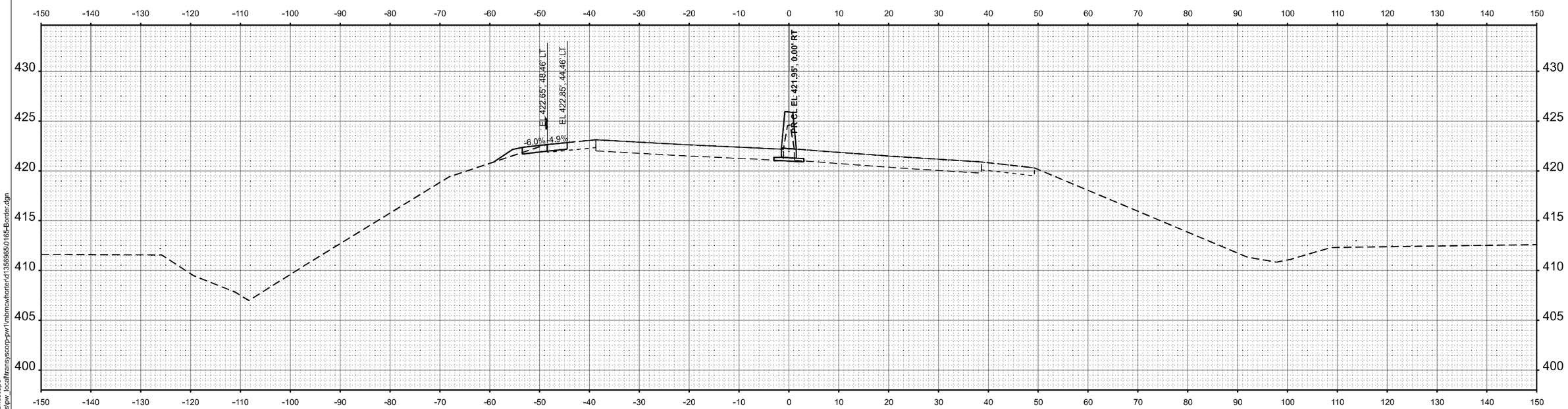

STA 327+50.00

MODEL: Cross Section - Landscape
FILE NAME: c:\transystems\pw_local\transyscorp-pw1\mbmcwhorter\d1356965\0165-Border.dgn

TRANSYSTEMS

USER NAME = mbmcwhorter	DESIGNED - NSP	REVISED -	
	DRAWN - MBM	REVISED -	
	CHECKED - KKY	REVISED -	
PLOT DATE = 10/15/2025	DATE - 10/15/2025	REVISED -	

STATE OF ILLINOIS
DEPARTMENT OF TRANSPORTATION

ILLINOIS 3 OVER PORT DISTRICT RAILYARD
CROSS SECTIONS

SCALE: 10 SCALE | SHEET 19 OF 19 SHEETS | STA. 327+50 TO STA. 328+00

F.A.P RTE.	SECTION	COUNTY	TOTAL SHEETS	SHEET NO.
0002	(103,104)BR-1	MADISON	178	178

CONTRACT NO. 76N65

ILLINOIS | FED. AID PROJECT