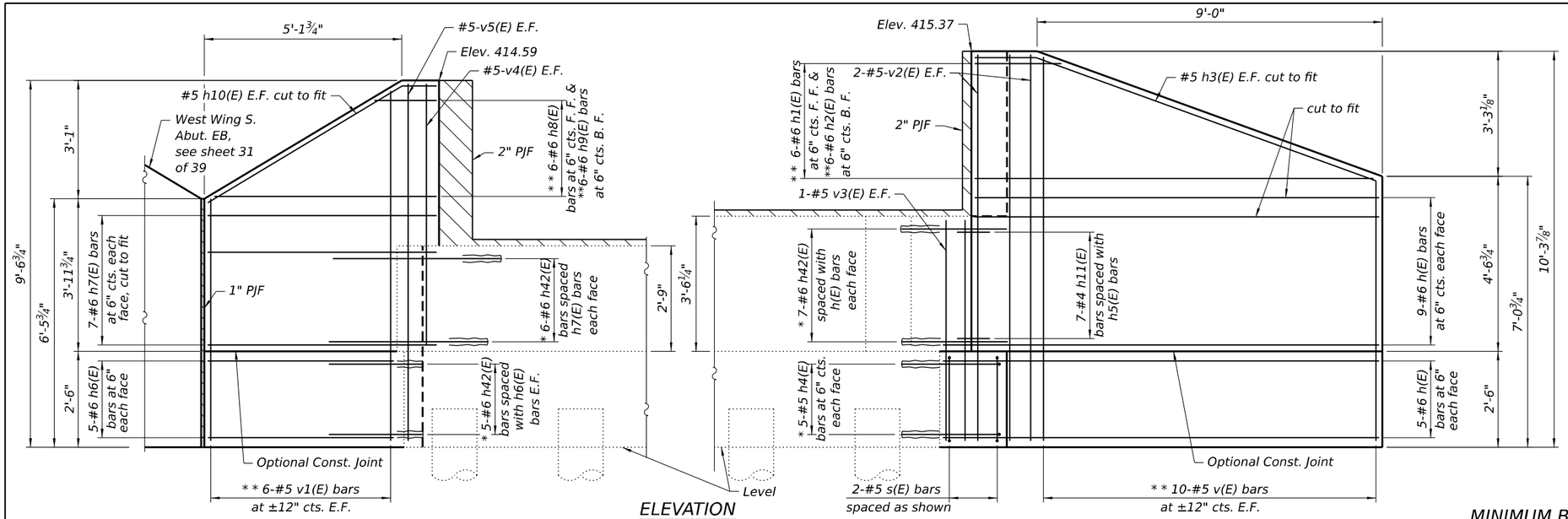

ELEVATION
(Looking South)

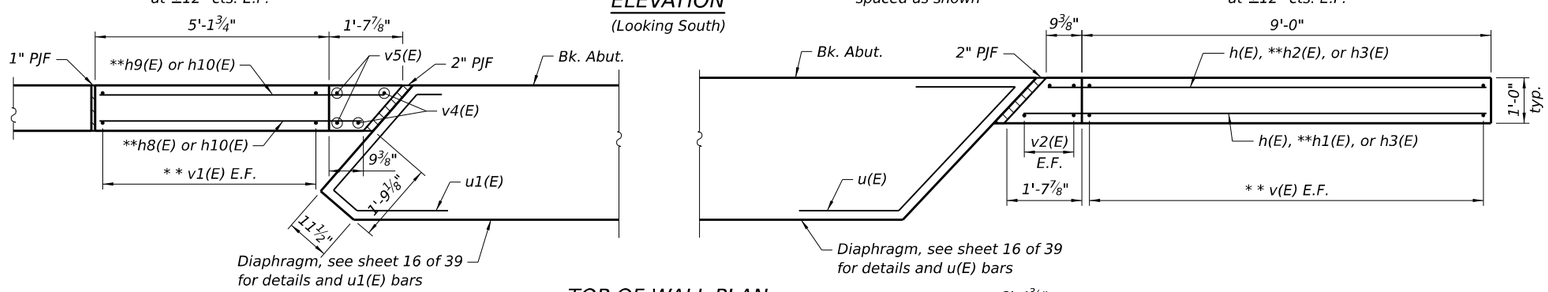

TOP OF WALL PLAN

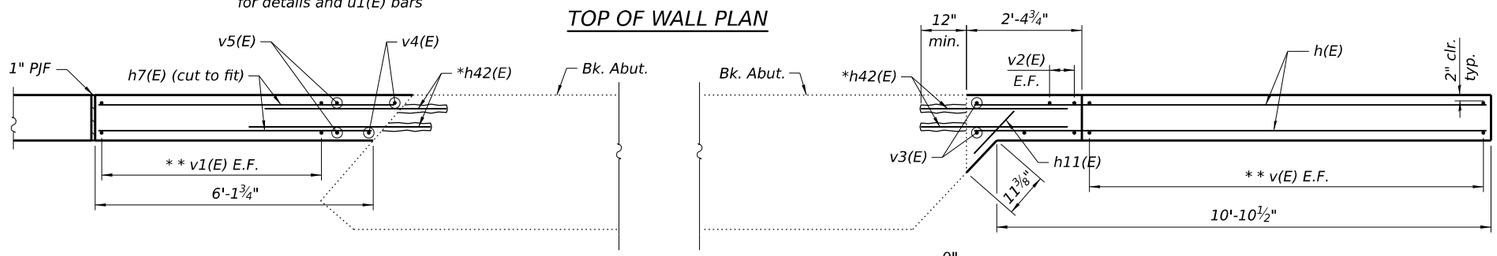

ABUTMENT CAP PLAN

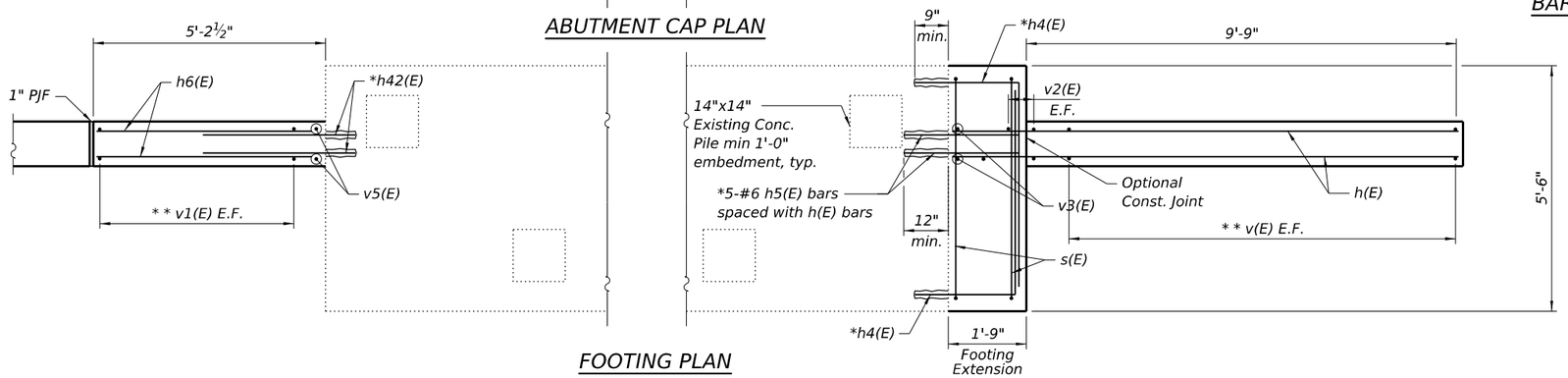

FOOTING PLAN

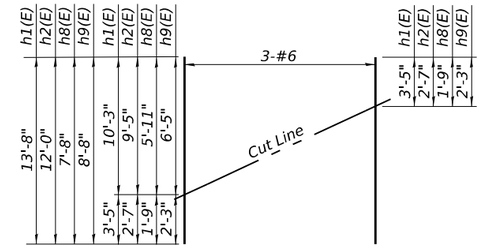

FIELD CUTTING DIAGRAM
Order h1(E), h2(E), h8(E), and h9(E) bars full length. Cut as shown and use remainder of bars in upper wing.

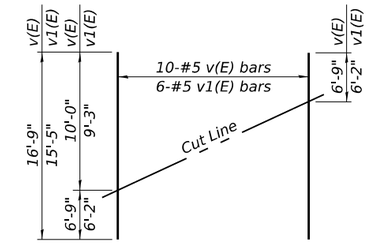

FIELD CUTTING DIAGRAM
Order v(E) and v1(E) bars full length. Cut as shown and use remainder of bars in opposite face.

MINIMUM BAR LAP
#6 bar = 3'-3"

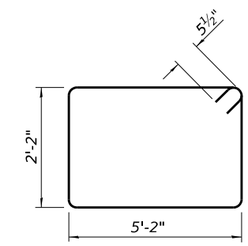

BAR s(E)

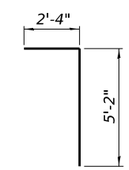

BAR h4(E)

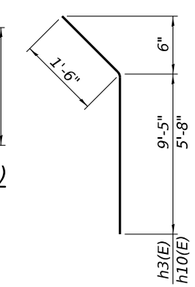

BAR h3(E) & h10(E)

BILL OF MATERIAL

Bar	No.	Size	Length	Shape
h(E)	28	#6	11'-1"	
h1(E)	3	#6	13'-8"	
h2(E)	3	#6	12'-0"	
h3(E)	2	#5	10'-10"	
h4(E)	10	#5	7'-6"	
h5(E)	10	#6	6'-0"	
h6(E)	10	#6	6'-1"	
h7(E)	14	#6	7'-7"	
h8(E)	3	#6	7'-8"	
h9(E)	3	#6	8'-8"	
h10(E)	2	#5	7'-2"	
h11(E)	7	#4	1'-9"	
h42(E)	36	#6	4'-3"	
s(E)	2	#5	15'-7"	
v(E)	10	#5	16'-9"	
v1(E)	6	#5	15'-5"	
v2(E)	4	#5	10'-0"	
v3(E)	2	#5	5'-8"	
v4(E)	2	#5	6'-9"	
v5(E)	2	#5	9'-3"	
Structure Excavation			Cu. Yd.	165
Concrete Structures			Cu. Yd.	7.0
Reinforcement Bars, Epoxy Coated			Pound	1,740

*Epoxy grout bars as detailed drilled holes according to Section 584 of the Standard Specifications. All grouted bars shall have a 4" cl. to the edge of existing concrete.
** See Field Cutting Diagram

Notes:
h5(E) bars in footing elevation view in West Wing are not shown for clarity.
F.F. indicates front face.
B.F. indicates back face.
E.F. indicates each face.

MODEL: $MODELNAMES
FILE NAME: D876E84-029-0018-0019-WB SO ABUT.dgn

Jacobs
525 West Monroe
Suite 1600
Chicago, IL 60661
(312) 251-3000

USER NAME = jacobspw18lcs09$	DESIGNED - CJF	REVISED -	
	DRAWN - EAK	REVISED -	
PLOT SCALE = 0.16666667 ' / in.	CHECKED - ED	REVISED -	
PLOT DATE = 12/4/2025	DATE - 2025/10/03	REVISED -	

STATE OF ILLINOIS
DEPARTMENT OF TRANSPORTATION

WESTBOUND SOUTH ABUTMENT
STRUCTURE NO. 082–0018 (WB) & 082–0019 (EB)

SCALE: NTS | SHEET 30 OF 39 SHEETS | STA. TO STA.

F.A.I. RTE.	SECTION	COUNTY	TOTAL SHEETS	SHEET NO.
70	Section82-(5,6)RS-2, 60-6RS-2	MADISON & ST. CLAIR	678	401

CONTRACT NO. 76E84
ILLINOIS FED. AID PROJECT

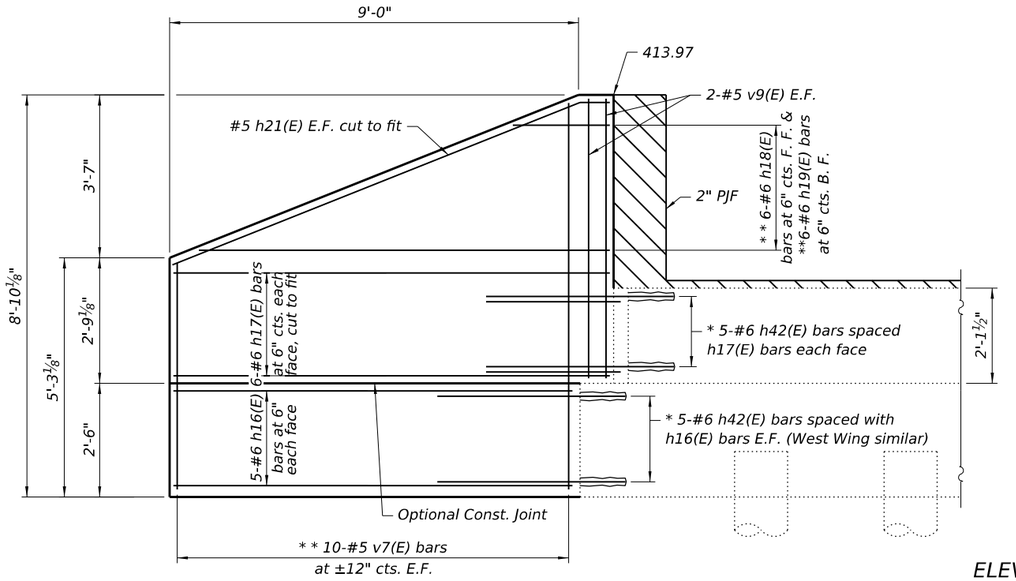

ELEVATION
(Looking South)

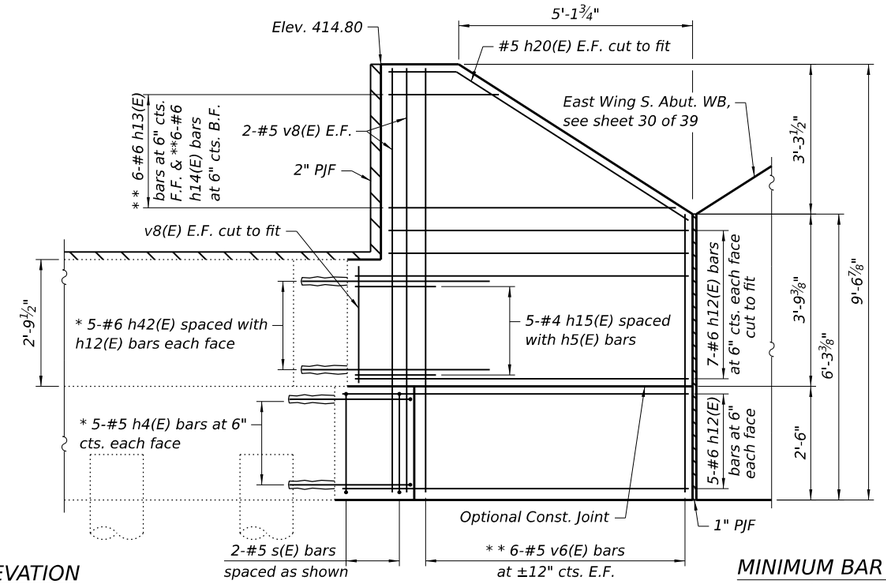

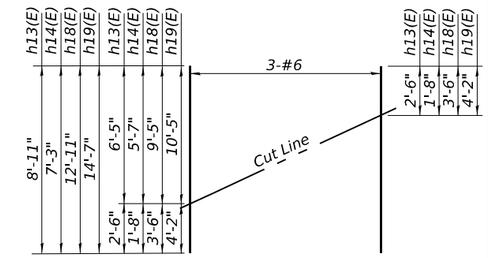

FIELD CUTTING DIAGRAM
Order h13(E), h14(E), h18(E), and h19(E) bars full length. Cut as shown and use remainder of bars in upper wing.

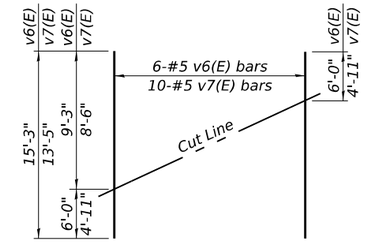

FIELD CUTTING DIAGRAM
Order v6(E) and v7(E) bars full length. Cut as shown and use remainder of bars in opposite face.

MINIMUM BAR LAP
#6 bar = 3'-3"

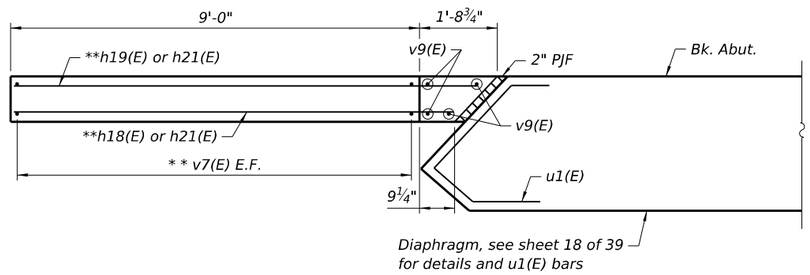

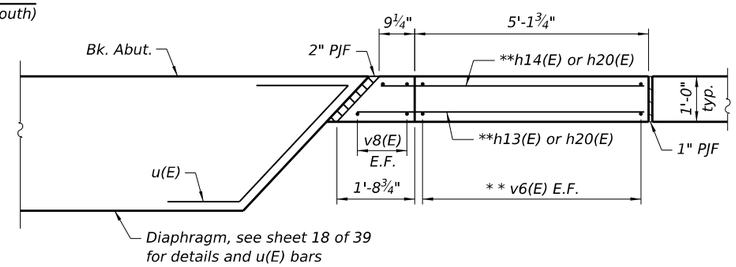

TOP OF WALL PLAN

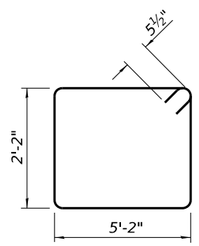

BAR s(E)

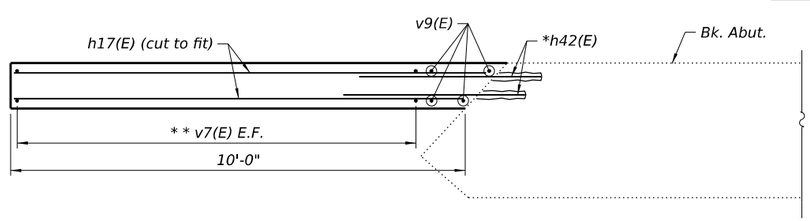

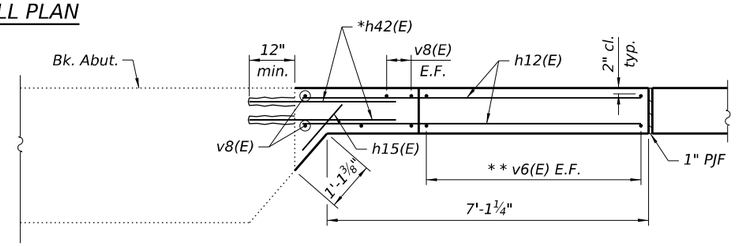

ABUTMENT CAP PLAN

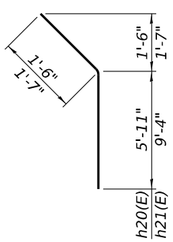

BAR h20(E) & h21(E)

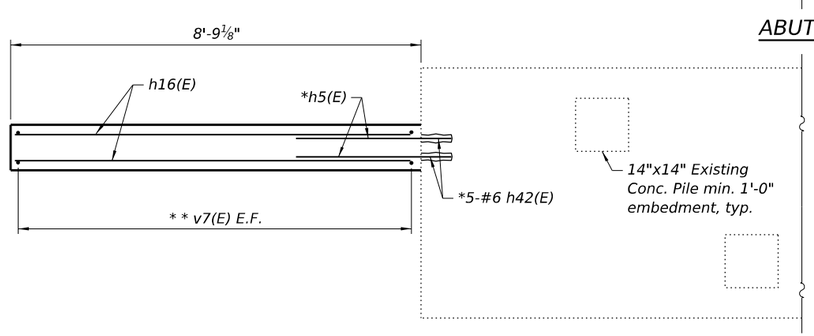

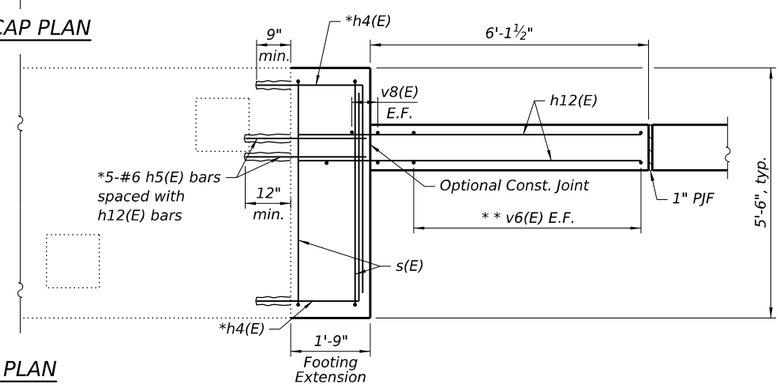

FOOTING PLAN

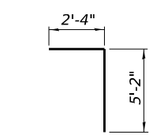

BAR h4(E)

BILL OF MATERIAL

Bar	No.	Size	Length	Shape
h4(E)	10	#5	7'-6"	
h5(E)	10	#6	6'-0"	
h12(E)	24	#6	11'-1"	
h13(E)	3	#6	8'-11"	
h14(E)	3	#6	7'-3"	
h15(E)	5	#4	1'-9"	
h16(E)	10	#6	8'-5"	
h17(E)	12	#6	10'-5"	
h18(E)	3	#6	12'-11"	
h19(E)	3	#6	14'-7"	
h20(E)	2	#5	7'-5"	
h21(E)	2	#5	10'-11"	
h42(E)	30	#6	4'-3"	
s(E)	2	#5	15'-7"	
v6(E)	6	#5	15'-3"	
v7(E)	10	#5	13'-5"	
v8(E)	4	#5	9'-3"	
v9(E)	4	#5	5'-8"	
Structure Excavation			Cu. Yd.	165
Concrete Structures			Cu. Yd.	6.4
Reinforcement Bars, Epoxy Coated			Pound	1,650

Notes:
h5(E) bars in footing elevation view in East Wing are not shown for clarity.
F.F. indicates front face.
B.F. indicates back face.
E.F. indicates each face.

*Epoxy grout bars as detailed drilled holes according to Section 584 of the Standard Specifications. All grouted bars shall have a 4" cl. to the edge of existing concrete.
** See Field Cutting Diagram

MODEL: $MODELNAME$
FILE NAME: D876E84-030-0018-0019-EB SO ABUT.dgn

Jacobs
525 West Monroe
Suite 1600
Chicago, IL 60661
(312) 251-3000

USER NAME = jacobspw18lcs10$	DESIGNED - CJF	REVISED -	
	DRAWN - EAK	REVISED -	
PLOT SCALE = 0.16666667 ' / in.	CHECKED - ED	REVISED -	
PLOT DATE = 12/4/2025	DATE - 2025/10/03	REVISED -	

STATE OF ILLINOIS
DEPARTMENT OF TRANSPORTATION

EASTBOUND SOUTH ABUTMENT
STRUCTURE NO. 082–0018 (WB) & 082–0019 (EB)

SCALE: NTS | SHEET 31 OF 39 SHEETS | STA. | TO STA.

F.A.I. RTE.	SECTION	COUNTY	TOTAL SHEETS	SHEET NO.
70	Section82-(5,6)RS-2, 60-6RS-2	MADISON & ST. CLAIR	678	402
		CONTRACT NO. 76E84		
		ILLINOIS	FED. AID PROJECT	

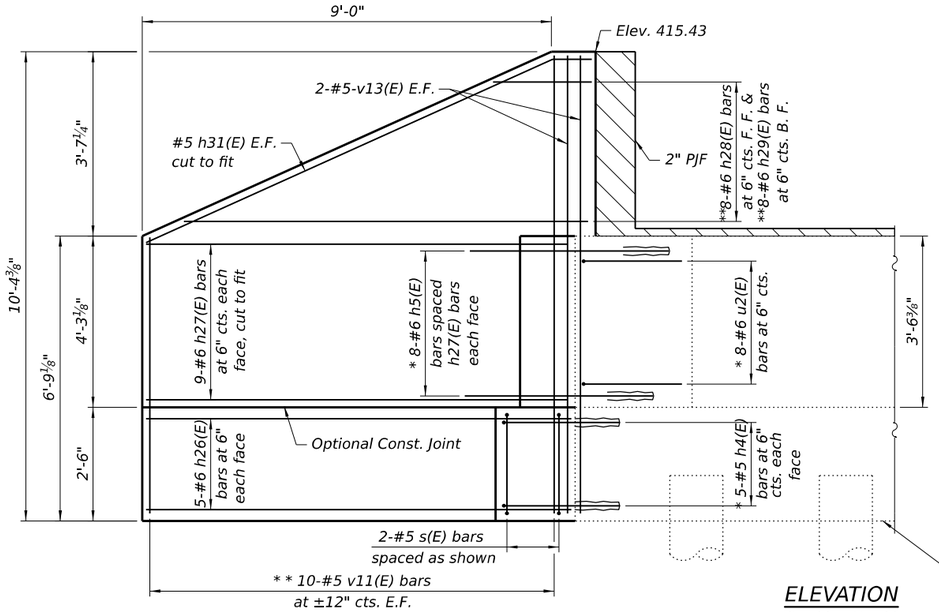

ELEVATION
(Looking North)

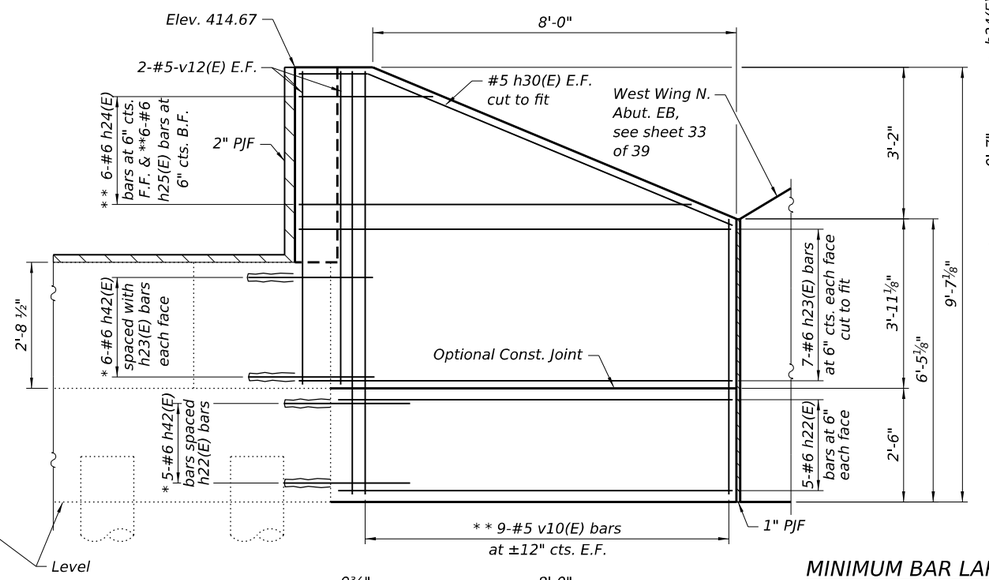

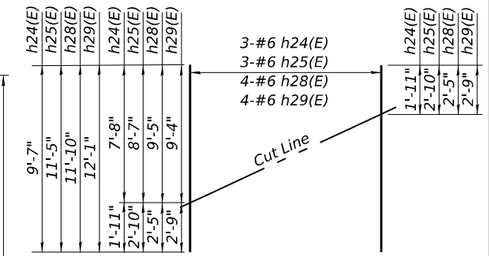

FIELD CUTTING DIAGRAM
Order h24(E), h25(E), h28(E), and h29(E) bars full length. Cut as shown and use remainder of bars in upper wing.

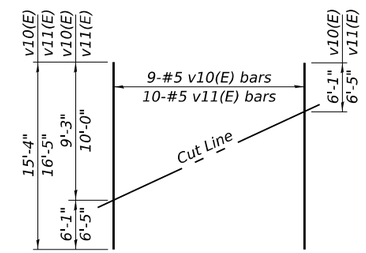

FIELD CUTTING DIAGRAM
Order v10(E) and v11(E) bars full length. Cut as shown and use remainder of bars in opposite face.

MINIMUM BAR LAP
#6 bar = 3'-3"

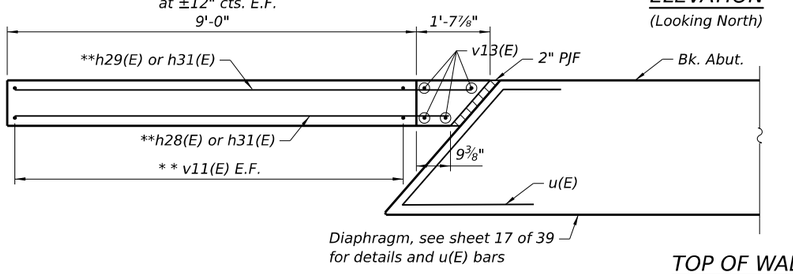

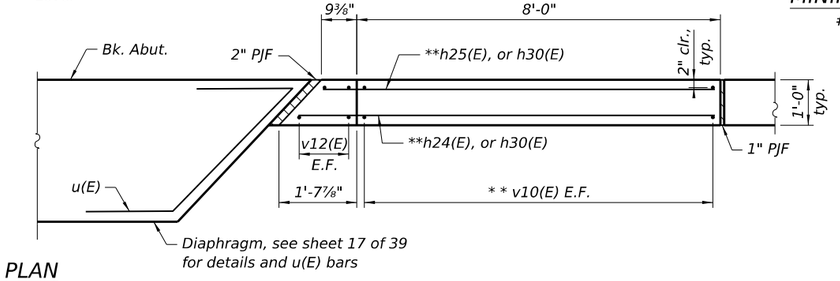

TOP OF WALL PLAN

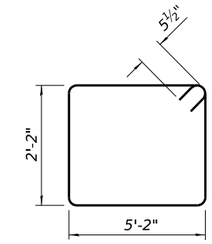

BAR s(E)

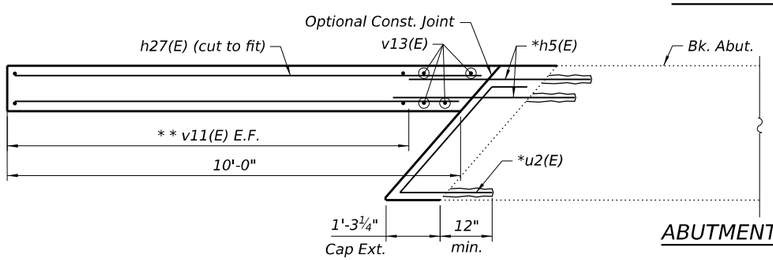

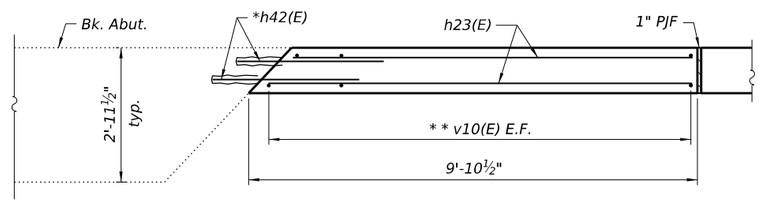

ABUTMENT CAP PLAN

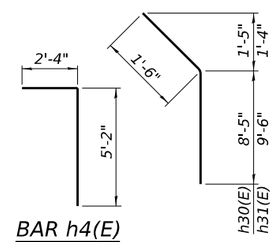

BAR h4(E)

BAR h30(E) & h31(E)

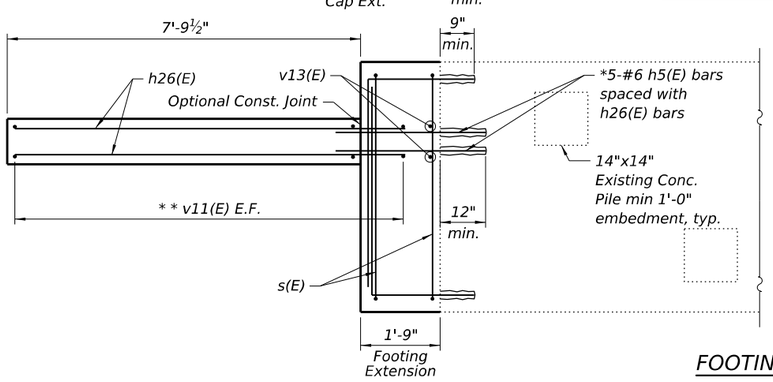

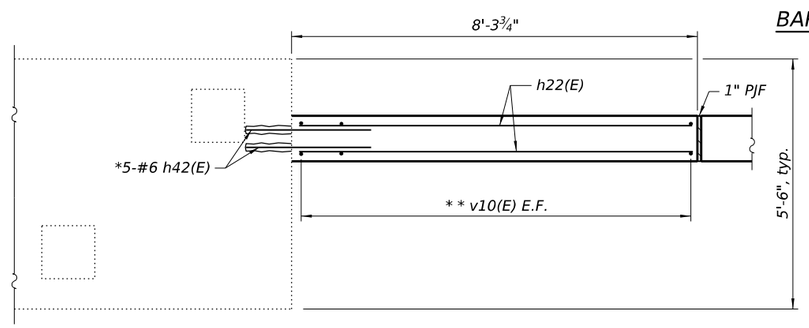

FOOTING PLAN

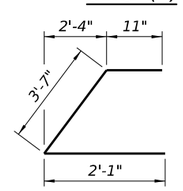

BAR u2(E)

BILL OF MATERIAL

Bar	No.	Size	Length	Shape
h4(E)	10	#5	7'-6"	
h5(E)	26	#6	6'-0"	
h22(E)	10	#6	8'-0"	
h23(E)	14	#6	10'-0"	
h24(E)	3	#6	9'-7"	
h25(E)	3	#6	11'-5"	
h26(E)	10	#6	7'-10"	
h27(E)	18	#6	10'-6"	
h28(E)	4	#6	11'-10"	
h29(E)	4	#6	12'-1"	
h30(E)	2	#5	9'-11"	
h31(E)	2	#5	11'-0"	
h42(E)	22	#6	4'-3"	
s(E)	2	#5	15'-7"	
u2(E)	8	#6	6'-7"	
v10(E)	9	#5	15'-4"	
v11(E)	10	#5	16'-5"	
v12(E)	4	#5	9'-3"	
v13(E)	4	#5	10'-0"	
Structure Excavation		Cu. Yd.	183	
Concrete Structures		Cu. Yd.	8.8	
Reinforcement Bars, Epoxy Coated		Pound	1,980	

Notes:
h5(E) bars in the footing elevation view in West Wing are not shown for clarity.
F.F. indicates front face.
B.F. indicates back face.
E.F. indicates each face.

*Epoxy grout bars as detailed drilled holes according to Section 584 of the Standard Specifications. All grouted bars shall have a 4" cl. to the edge of existing concrete.
** See Field Cutting Diagram

MODEL: $MODELNAMES
FILE NAME: D876E84-231-0018-0019-WB NO ABUT.dgn

Jacobs
525 West Monroe
Suite 1600
Chicago, IL 60661
(312) 251-3000

USER NAME = jacobspw18ics11$	DESIGNED - CJF	REVISED -	
	DRAWN - EAK	REVISED -	
PLOT SCALE = 0.16666667 ' / in.	CHECKED - ED	REVISED -	
PLOT DATE = 12/4/2025	DATE - 2025/10/03	REVISED -	

STATE OF ILLINOIS
DEPARTMENT OF TRANSPORTATION

WESTBOUND NORTH ABUTMENT
STRUCTURE NO. 082–0018 (WB) & 082–0019 (EB)

SCALE: NTS | SHEET 32 OF 39 SHEETS | STA. | TO STA.

F.A.I. RTE.	SECTION	COUNTY	TOTAL SHEETS	SHEET NO.
70	Section82-(5,6)RS-2, 60-6RS-2	MADISON & ST. CLAIR	678	403

CONTRACT NO. 76E84
ILLINOIS FED. AID PROJECT

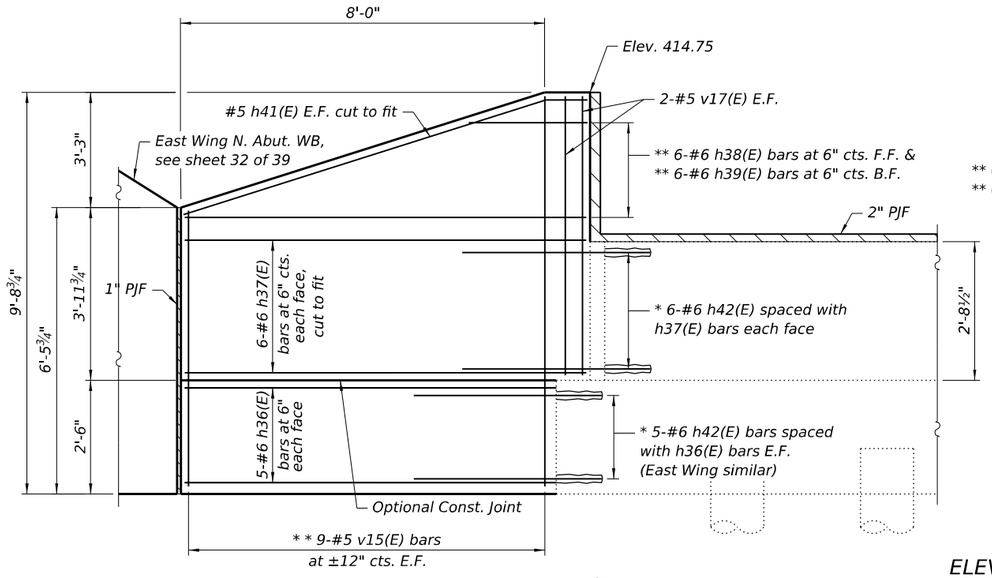

ELEVATION
(Looking North)

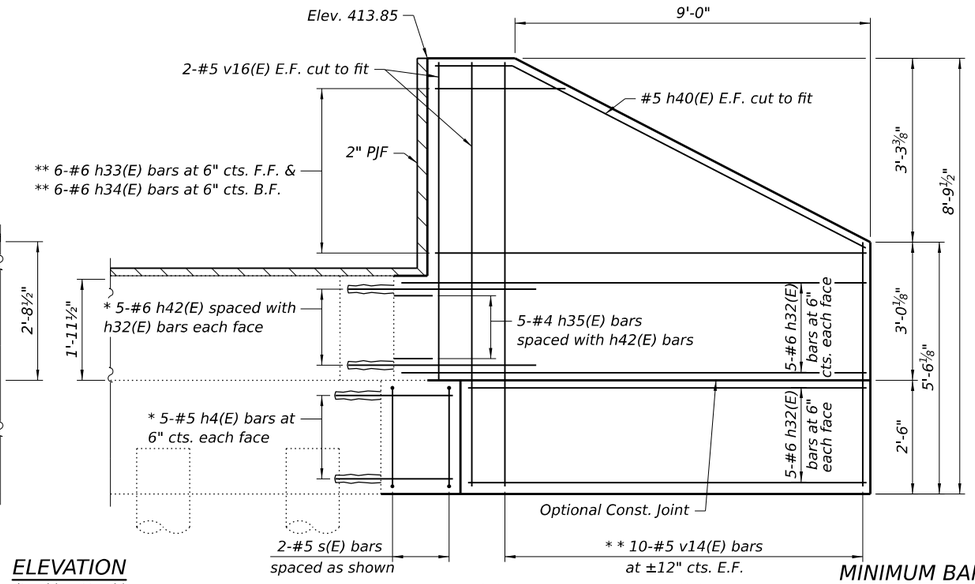

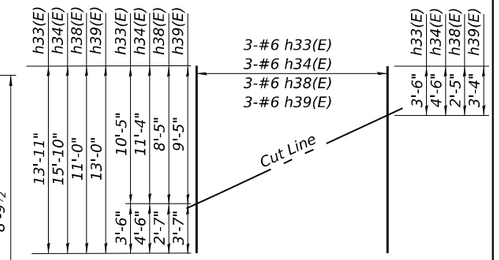

FIELD CUTTING DIAGRAM
Order h33(E), h34(E), h38(E), and h39(E) bars full length. Cut as shown and use remainder of bars in upper wing.

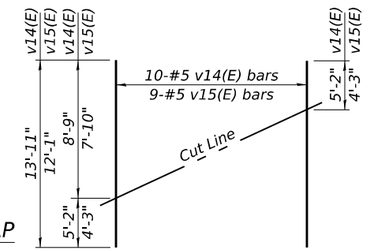

MINIMUM BAR LAP
#6 bar = 3'-3"

FIELD CUTTING DIAGRAM
Order v14(E) and v15(E) bars full length. Cut as shown and use remainder of bars in opposite face.

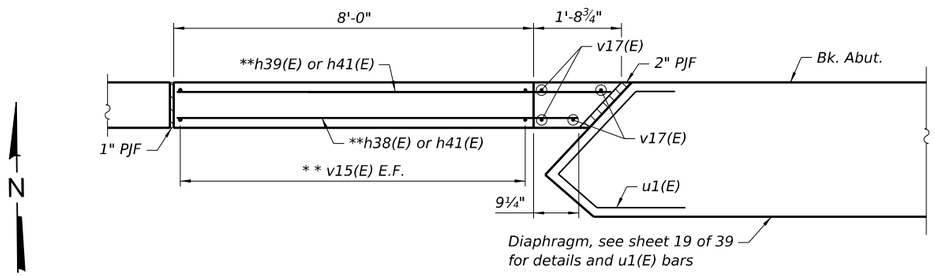

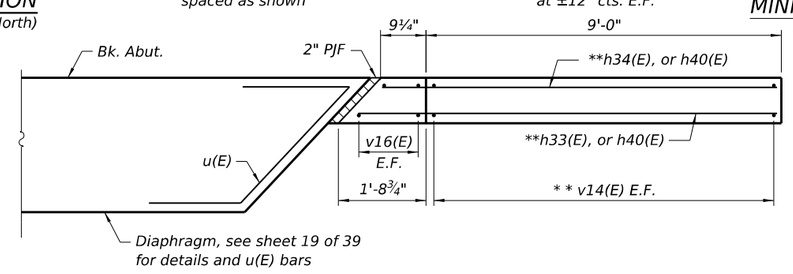

TOP OF WALL PLAN

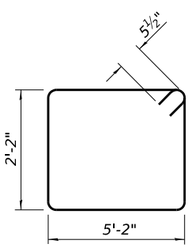

BAR s(E)

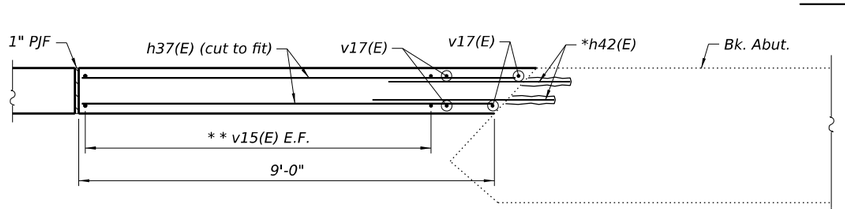

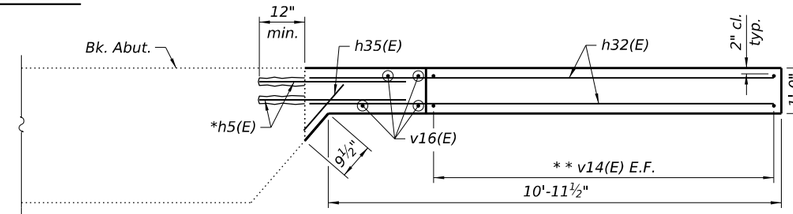

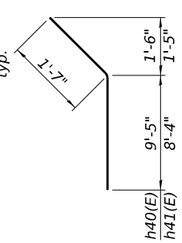

BAR h40(E) & h41(E)

ABUTMENT CAP PLAN

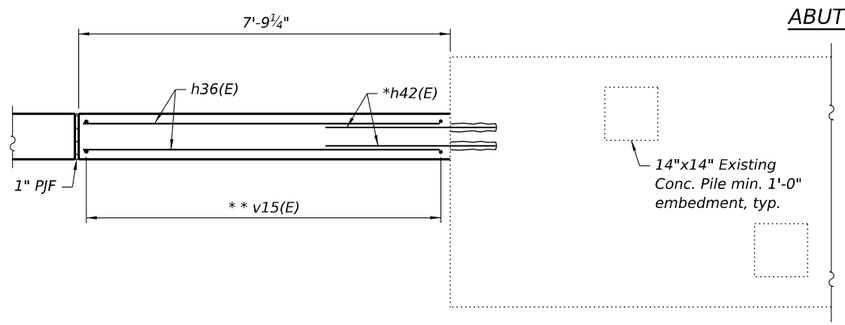

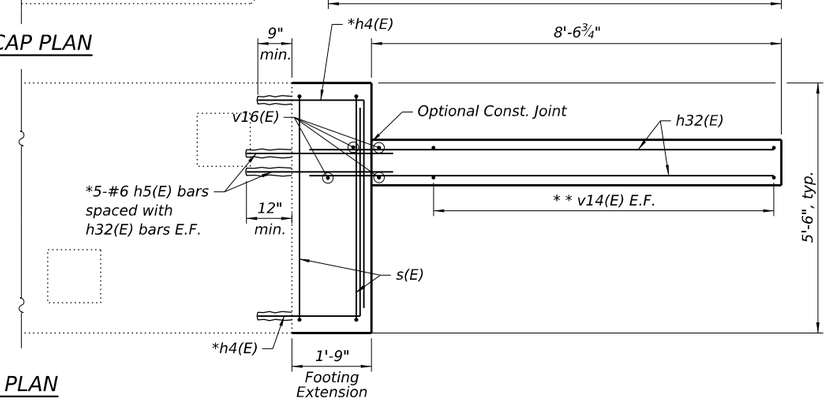

FOOTING PLAN

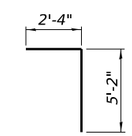

BAR h4(E)

BILL OF MATERIAL

Bar	No.	Size	Length	Shape
h4(E)	10	#5	7'-6"	
h5(E)	10	#6	6'-0"	
h32(E)	20	#6	10'-0"	
h33(E)	3	#6	13'-11"	
h34(E)	3	#6	15'-10"	
h35(E)	5	#4	1'-9"	
h36(E)	10	#6	7'-5"	
h37(E)	18	#6	9'-7"	
h38(E)	3	#6	11'-0"	
h39(E)	3	#6	13'-0"	
h40(E)	2	#5	11'-0"	
h41(E)	2	#5	9'-11"	
h42(E)	32	#6	4'-3"	
s(E)	2	#5	15'-7"	
v14(E)	10	#5	13'-11"	
v15(E)	9	#5	12'-1"	
v16(E)	4	#5	8'-9"	
v17(E)	4	#5	6'-9"	
Structure Excavation		Cu. Yd.	156	
Concrete Structures		Cu. Yd.	8.9	
Reinforcement Bars, Epoxy Coated		Pound	1,700	

Notes:
h5(E) bars in the footing elevation view in East Wing are not shown for clarity.
F.F. indicates front face.
B.F. indicates back face.
E.F. indicates each face.

*Epoxy grout bars as detailed drilled holes according to Section 584 of the Standard Specifications. All grouted bars shall have a 4" cl. to the edge of existing concrete.
** See Field Cutting Diagram

MODEL: SMODELNAMES
FILE NAME: D876E84-032-0018-0019-EB NO ABUT.dgn

Jacobs
525 West Monroe
Suite 1600
Chicago, IL 60661
(312) 251-3000

USER NAME = jacobspw18lcs11$	DESIGNED - CJF	REVISED -	
	DRAWN - EAK	REVISED -	
PLOT SCALE = 0.16666667 ' / in.	CHECKED - ED	REVISED -	
PLOT DATE = 12/4/2025	DATE - 2025/10/03	REVISED -	

STATE OF ILLINOIS
DEPARTMENT OF TRANSPORTATION

EASTBOUND NORTH ABUTMENT
STRUCTURE NO. 082–0018 (WB) & 082–0019 (EB)

SCALE: NTS | SHEET 33 OF 39 SHEETS | STA. | TO STA.

F.A.I. RTE.	SECTION	COUNTY	TOTAL SHEETS	SHEET NO.
70	Section82-(5,6)RS-2, 60-6RS-2	MADISON & ST. CLAIR	678	404
		CONTRACT NO. 76E84		
		ILLINOIS	FED. AID PROJECT	

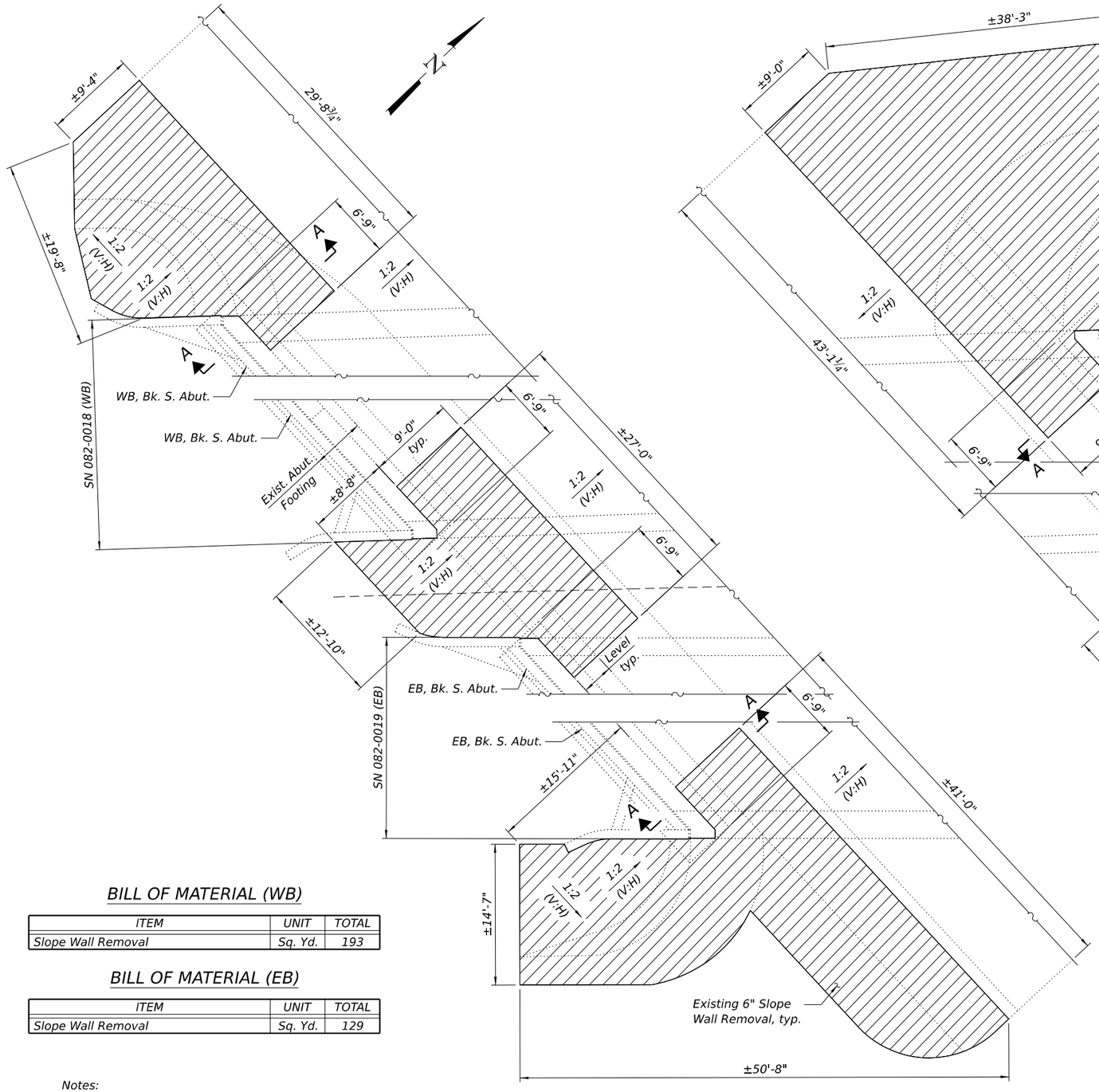

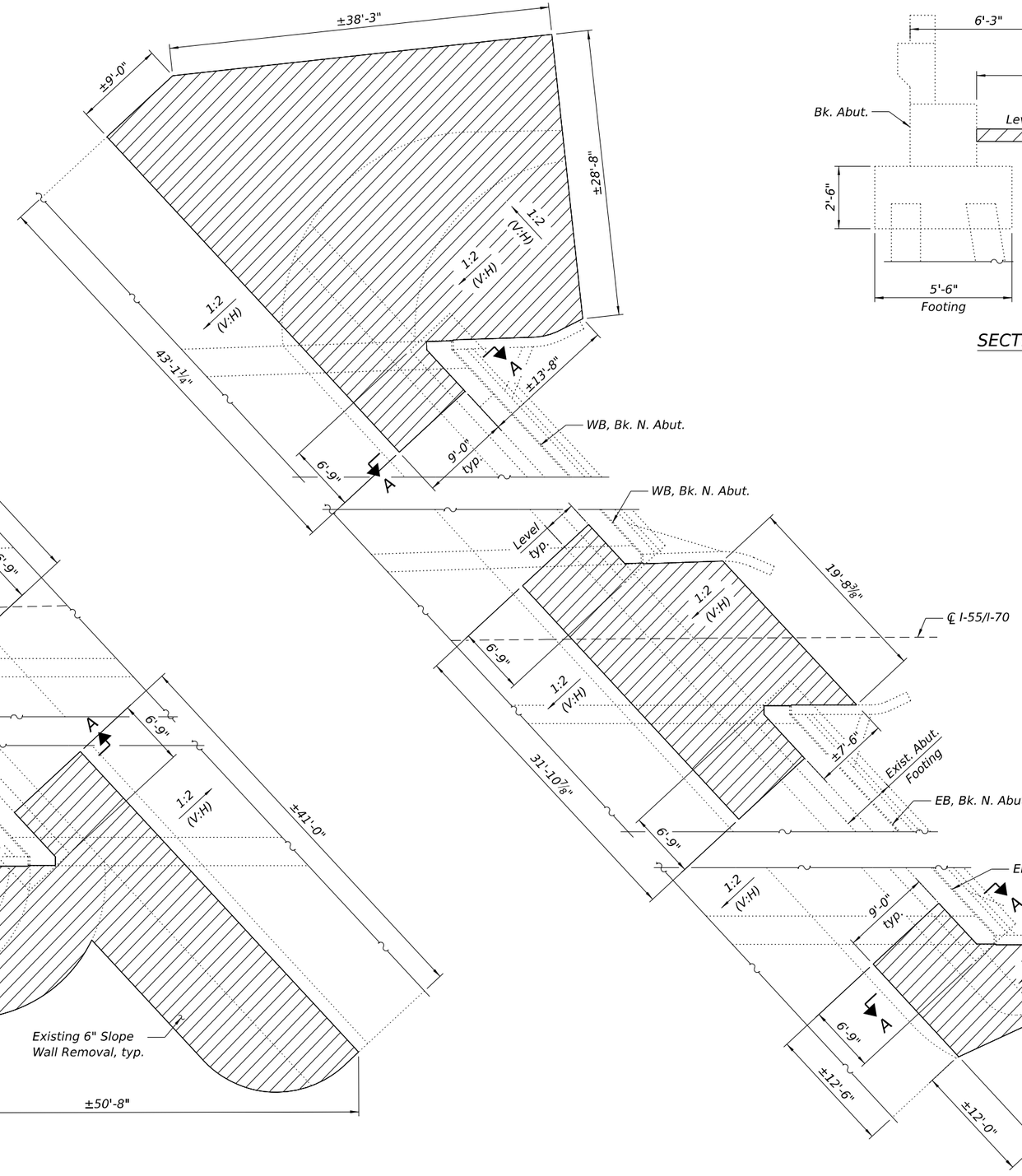

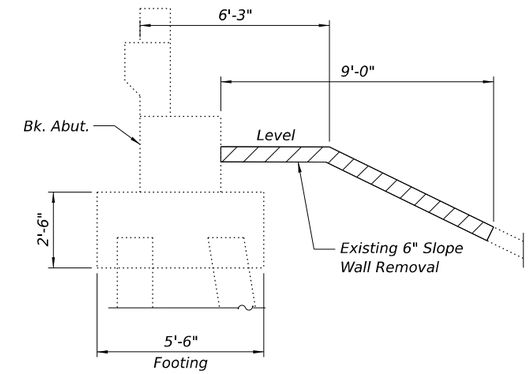

SECTION A-A

BILL OF MATERIAL (WB)

ITEM	UNIT	TOTAL
Slope Wall Removal	Sq. Yd.	193

BILL OF MATERIAL (EB)

ITEM	UNIT	TOTAL
Slope Wall Removal	Sq. Yd.	129

Notes:
Dimensions shown are in plan. Actual dimensions of slopewall to be removed is subject to sloped ground conditions.

SOUTH ABUTMENT

NORTH ABUTMENT

MODEL: $MODELNAMES
FILE NAME: D876E84-034-0018-0019-SLOPE DEMO PLAN.dgn

Jacobs
525 West Monroe
Suite 1600
Chicago, IL 60661
(312) 251-3000

USER NAME = jacobspw18lcs09$	DESIGNED - CJF	REVISED -	
	DRAWN - EAK	REVISED -	
PLOT SCALE = 0.16666667 ' / in.	CHECKED - ED	REVISED -	
PLOT DATE = 12/4/2025	DATE - 2025/10/03	REVISED -	

STATE OF ILLINOIS
DEPARTMENT OF TRANSPORTATION

EXISTING SLOPE WALL REMOVAL
STRUCTURE NO. 082–0018 (WB) & 082–0019 (EB)

SCALE: NTS | SHEET 34 OF 39 SHEETS | STA. | TO STA.

F.A.I. RTE.	SECTION	COUNTY	TOTAL SHEETS	SHEET NO.
70	Section82-(5,6)RS-2, 60-6RS-2	MADISON & ST. CLAIR	678	405

CONTRACT NO. 76E84

ILLINOIS | FED. AID PROJECT

BILL OF MATERIAL (WB)

ITEM	UNIT	TOTAL
Slope wall 6 inch	Sq. Yd.	119

BILL OF MATERIAL (EB)

ITEM	UNIT	TOTAL
Slope wall 6 inch	Sq. Yd.	96

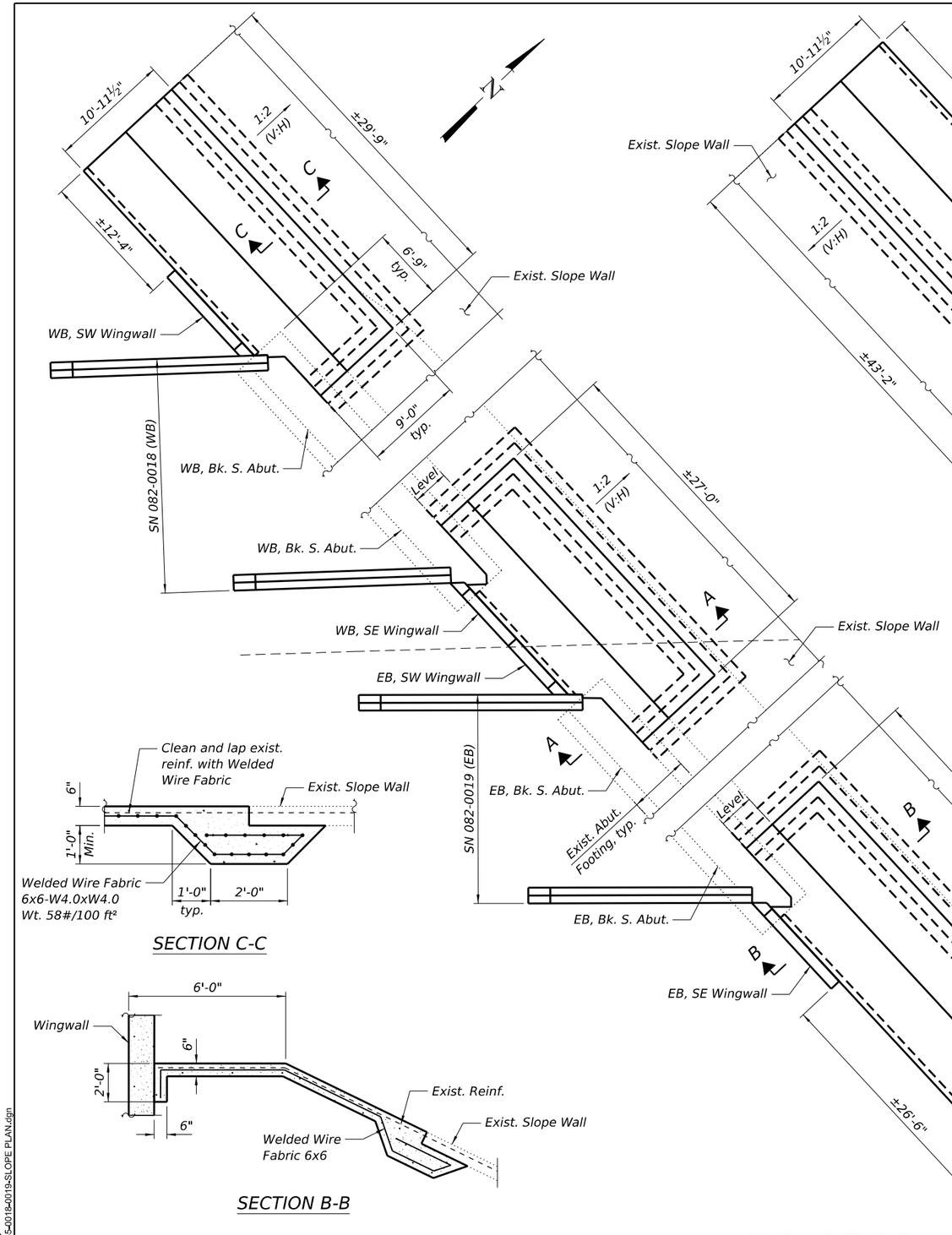

SOUTH ABUTMENT
(Bridge Slab not shown)

NORTH ABUTMENT
(Bridge Slab not shown)

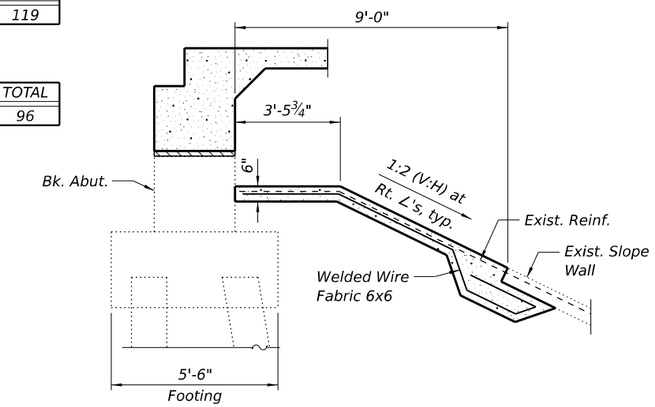

SECTION A-A

Notes:
Slope wall shall be reinforced with welded wire fabric, 6in. x 6 in. - W4.0 x W4.0, weighing 58 lbs. per 100 sq. ft.
Dimensions shown are in plan. Actual dimensions of slopewall to be placed is subject to sloped ground conditions.

SECTION C-C

SECTION B-B

MODEL: $MODELNAME$
FILE NAME: D876E84-035-0018-0019-SLOPE PLAN.dgn

Jacobs
525 West Monroe
Suite 1600
Chicago, IL 60661
(312) 251-3000

USER NAME = jacobspw18lcs09$	DESIGNED - CJF	REVISED -	
	DRAWN - EAK	REVISED -	
PLOT SCALE = 0.16666667 ' / in.	CHECKED - ED	REVISED -	
PLOT DATE = 12/4/2025	DATE - 2025/10/03	REVISED -	

STATE OF ILLINOIS
DEPARTMENT OF TRANSPORTATION

SLOPE WALL REPLACEMENT
STRUCTURE NO. 082–0018 (WB) & 082–0019 (EB)

SCALE: NTS | SHEET 35 OF 39 SHEETS | STA. | TO STA.

F.A.I. RTE.	SECTION	COUNTY	TOTAL SHEETS	SHEET NO.
70	Section82-(5,6)RS-2, 60-6RS-2	MADISON & ST. CLAIR	678	406

CONTRACT NO. 76E84

ILLINOIS | FED. AID PROJECT

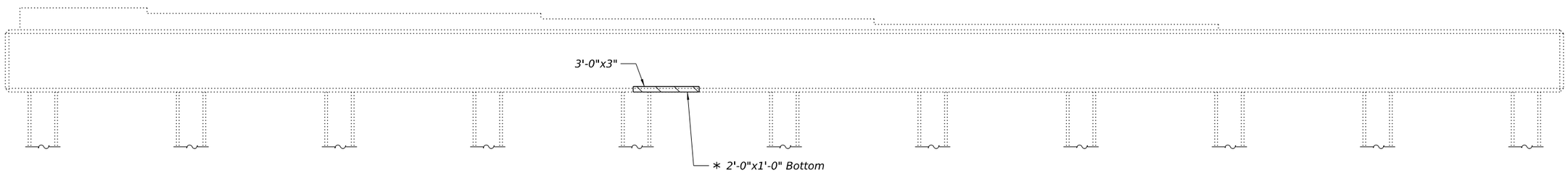

WESTBOUND PIER 1 ELEVATION
(Looking North)

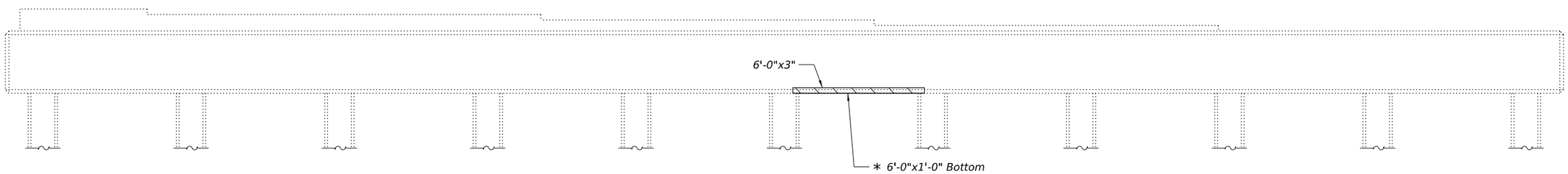

EASTBOUND PIER 2 ELEVATION
(Looking North)

Note:
Repair of existing piers shall include but may not be limited to the areas shown. The actual areas to be repaired shall be determined by the Engineer at the time of construction. See Special Provisions.

LEGEND

Structural Repair of Concrete (Depth Equal to or Less than 5 in.)

* Shotcrete Required

BILL OF MATERIAL WB

ITEM	UNIT	TOTAL
Structural Repair of Concrete (Depth Equal to or Less than 5 Inches)	Sq. Ft.	3

BILL OF MATERIAL EB

ITEM	UNIT	TOTAL
Structural Repair of Concrete (Depth Equal to or Less than 5 Inches)	Sq. Ft.	8

MODEL: $MODELNAMES
FILE NAME: D876E84-036-0018-0019-PIER REPAIR.dgn

Jacobs
525 West Monroe
Suite 1600
Chicago, IL 60661
(312) 251-3000

USER NAME = jacobspw18lcs10$	DESIGNED - CJF	REVISED -	
	DRAWN - EAK	REVISED -	
PLOT SCALE = 0.16666667 ' / in.	CHECKED - ED	REVISED -	
PLOT DATE = 12/4/2025	DATE - 2025/10/03	REVISED -	

STATE OF ILLINOIS
DEPARTMENT OF TRANSPORTATION

PIER REPAIR DETAILS
STRUCTURE NO. 082-0018 (WB) & 082-0019 (EB)

SCALE: NTS | SHEET 36 OF 39 SHEETS | STA. | TO STA.

F.A.I. RTE.	SECTION	COUNTY	TOTAL SHEETS	SHEET NO.
70	Section82-(5,6)RS-2, 60-6RS-2	MADISON & ST. CLAIR	678	407

CONTRACT NO. 76E84
ILLINOIS | FED. AID PROJECT

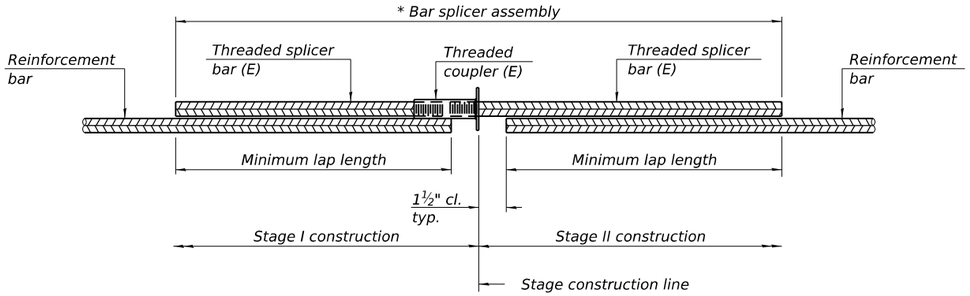

STANDARD BAR SPLICER ASSEMBLY PLAN

Only bar splicer assemblies as presented on the approved QPL list may be used.

Threaded splicer bar length = min. lap length + 1½" + thread length

* Epoxy not required on Bar Splicer Assembly components used in conjunction with black bars.

Location	Bar size	No. assemblies required	Minimum lap length
Deck	#5	775	3'-10"
Diaphragms	#6	20	4'-5"
Appr. Slab	#5	136	3'-10"
Appr. Slab	#8	180	5'-2"
Appr. Footing	#5	160	3'-10"

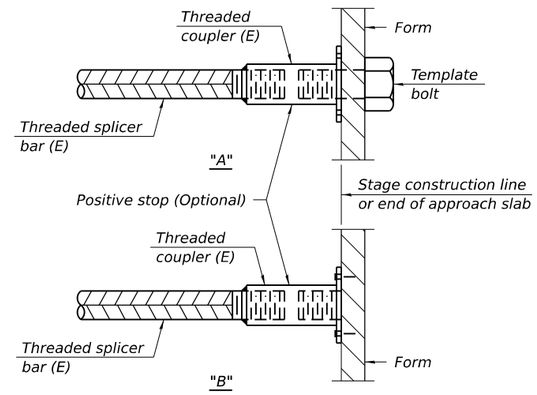

INSTALLATION AND SETTING METHODS

"A" : Set bar splicer assembly by means of a template bolt.
"B" : Set bar splicer assembly by nailing to wood forms or cementing to steel forms.
(E) : Indicates epoxy coating.

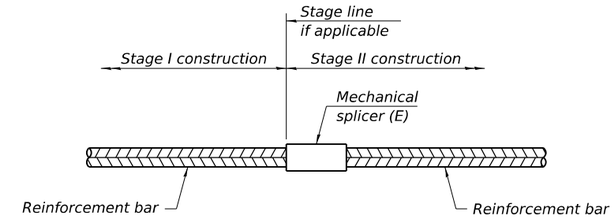

STANDARD MECHANICAL SPLICER

Location	Bar size	No. assemblies required

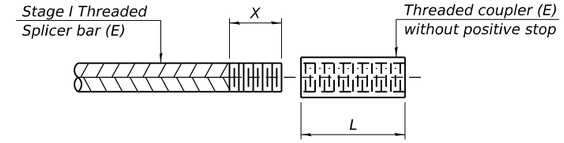

THREADING OF ASSEMBLIES

The threaded length "X" shall be no more than L/2. The bar should be tightened until 0-1 thread(s) is/are exposed.

Notes:
Splicer bars shall be deformed with threaded ends and have a minimum 60 ksi yield strength.
All reinforcement shall be lapped and tied to the splicer bars.
Bar splicer assemblies shall be epoxy coated according to the requirements for reinforcement bars. See Section 508 of the Standard Specifications.
See approved list of bar splicer assemblies and mechanical splicers for alternatives.

BSD-1 4-4-2025

MODEL: $MODELNAME$
FILE NAME: D876E84-037-0018-0019-SPLICE.dgn

Jacobs
525 West Monroe
Suite 1600
Chicago, IL 60661
(312) 251-3000

USER NAME = jacobspw18lcs11$	DESIGNED - CJF	REVISED -	
	DRAWN - EAK	REVISED -	
PLOT SCALE = 2.000 ' / in.	CHECKED - ED	REVISED -	
PLOT DATE = 12/4/2025	DATE - 2025/10/03	REVISED -	

STATE OF ILLINOIS
DEPARTMENT OF TRANSPORTATION

BAR SPLICER ASSEMBLY AND MECHANICAL SPLICER DETAILS
STRUCTURE NO. 082-0018 (WB) & 082-0019 (EB)

SCALE: NTS | SHEET 37 OF 39 SHEETS | STA. TO STA.

F.A.I. RTE.	SECTION	COUNTY	TOTAL SHEETS	SHEET NO.
70	Section82-(5,6)RS-2, 60-6RS-2	MADISON & ST. CLAIR	678	408

CONTRACT NO. 76E84
ILLINOIS FED. AID PROJECT

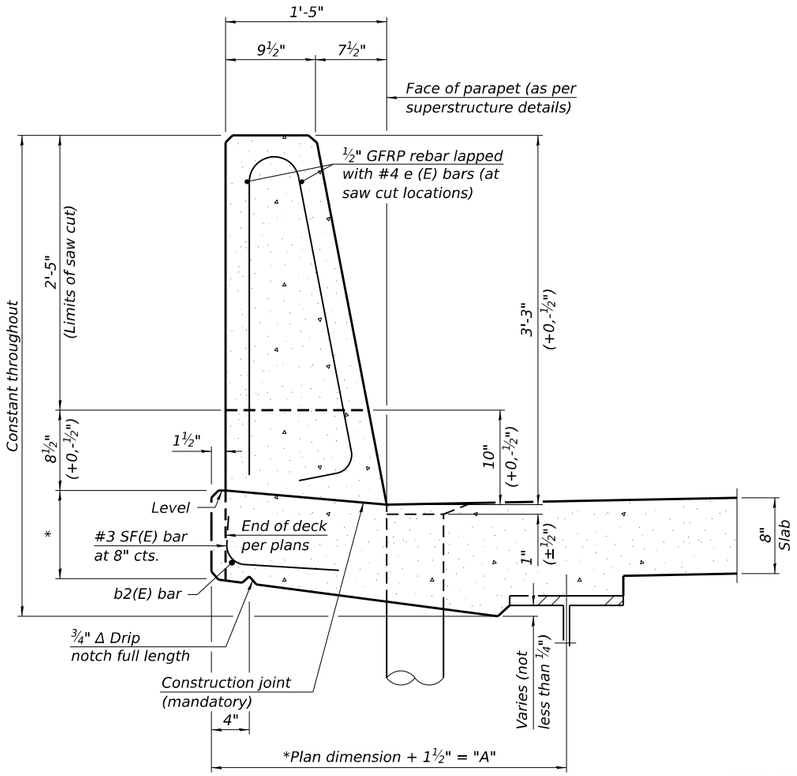

39" CONSTANT-SLOPE PARAPET SECTION

(Showing dimensions, d(E), and ½" Ø GFRP rebar)

STEEL SUPERSTRUCTURES

*See Superstructure Details.

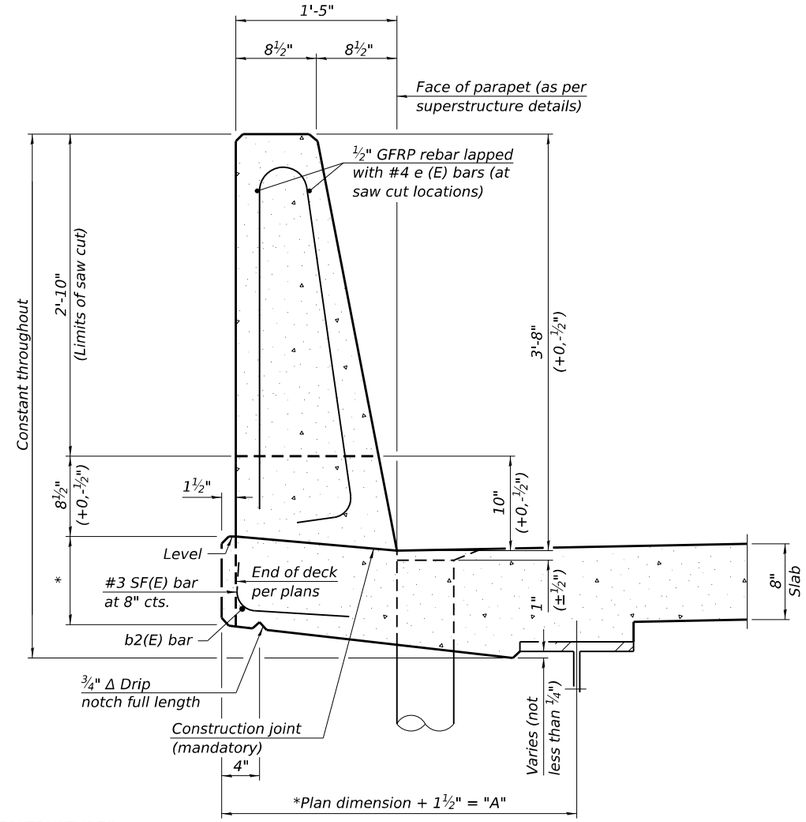

44" CONSTANT-SLOPE PARAPET SECTION

(Showing dimensions, d(E), and ½" Ø GFRP rebar)

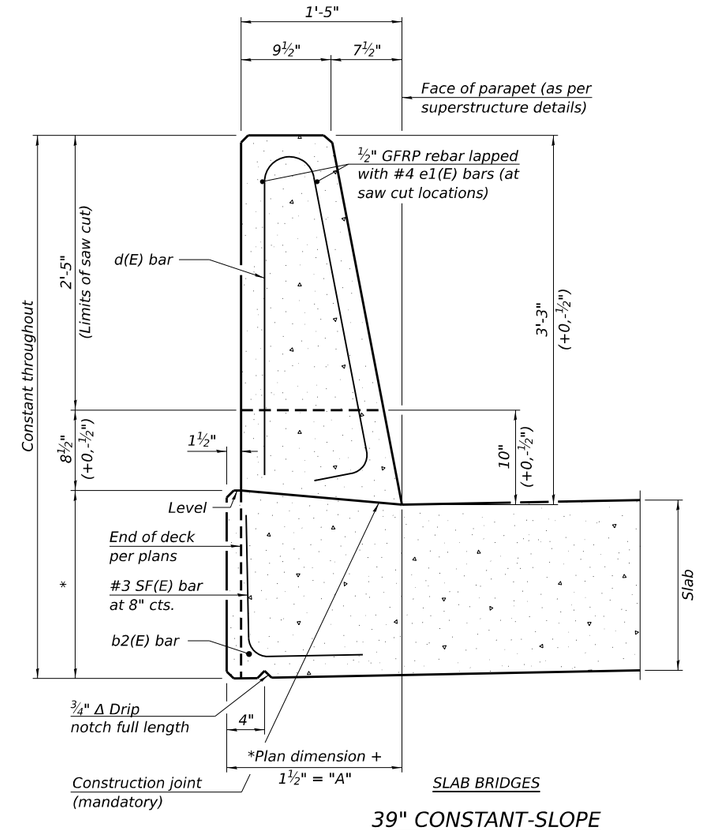

SLAB BRIDGES

39" CONSTANT-SLOPE PARAPET SECTION

(Showing dimensions, d(E), and ½" Ø GFRP rebar)

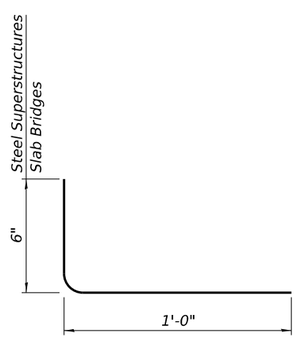

SF(E) BAR

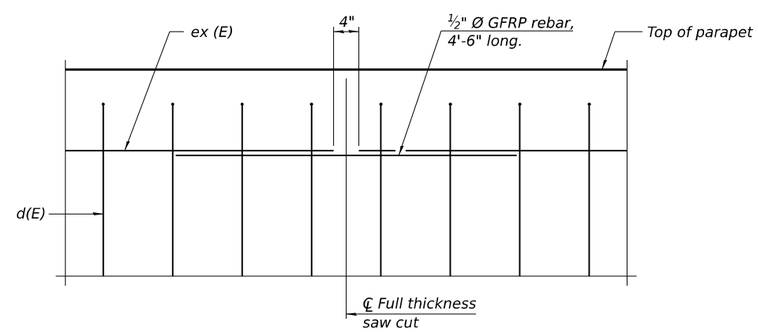

DETAIL - GFRP REBAR STIFFENING ELEVATION

(Place as shown in parapet section at each parapet joint location.)

Notes:
All dimensions shall remain the same as shown on superstructure details, except dimension "A" which is to be revised as shown.
Additional concrete needed to revise dimension "A" (39" and 44" parapets):
Steel Superstructures: 0.00348 cu. yds./ft.
Slab Bridge Superstructures: cu. yds./ft.
Place full depth aluminum sheets as shown on superstructure details.
Replace all cork joint filler locations with a full thickness saw cut.
Steel and slab superstructures shown. Other superstructure types similar.

SFP 39-44 10/27/2023

MODEL: $MODELNAMES
FILE NAME: D876E84-038-0018-0019-SLIPFORM.dgn

Jacobs
525 West Monroe
Suite 1600
Chicago, IL 60661
(312) 251-3000

USER NAME = jacobspw18lcs11$	DESIGNED - CJF	REVISED -	
	DRAWN - EAK	REVISED -	
PLOT SCALE = 2,000 ' / in.	CHECKED - ED	REVISED -	
PLOT DATE = 12/4/2025	DATE - 2025/10/03	REVISED -	

STATE OF ILLINOIS
DEPARTMENT OF TRANSPORTATION

CONCRETE PARAPET SLIPFORMING OPTION
STRUCTURE NO. 082–0018 (WB) & 082–0019 (EB)

SCALE: NTS | SHEET 38 OF 39 SHEETS | STA. TO STA.

F.A.I. RTE.	SECTION	COUNTY	TOTAL SHEETS	SHEET NO.
70	Section82-(5,6)RS-2, 60-6RS-2	MADISON & ST. CLAIR	678	409
		CONTRACT NO. 76E84		
		ILLINOIS	FED. AID PROJECT	

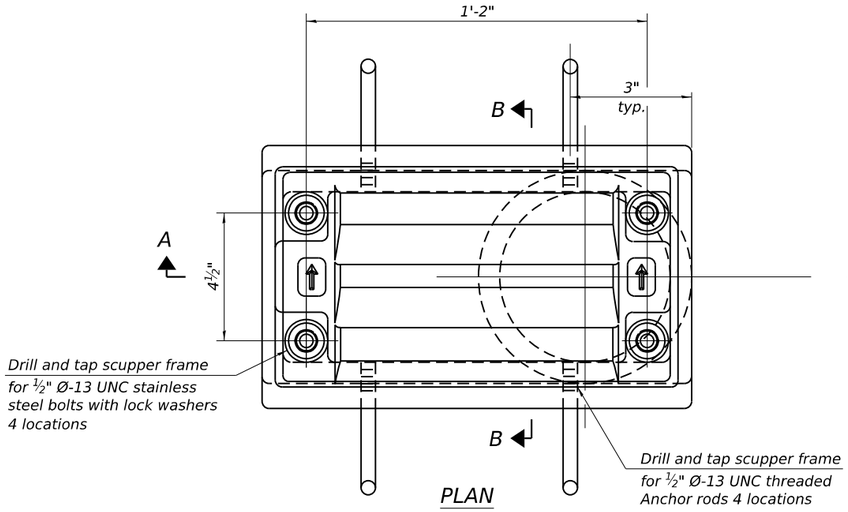

PLAN

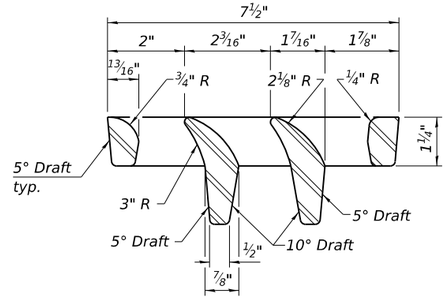

VANE GRATE DETAIL

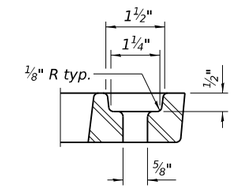

GRATE BOLT HOLE DETAIL

Notes:

All cast iron parts shall be gray iron conforming to the requirements of AASHTO M105, Class 35B and AASHTO M306.

Bolts, anchor rods, nuts and washers shall be according to ASTM A307 and shall be galvanized according to AASHTO M232. As an alternate stainless steel may be used.

Stainless steel hardware shall be according to Article 1006.29(d) of the Standard Specifications.

Structural steel weldments of equal sections and of the same configuration may be substituted for the cast iron scupper frames and downspouts; however, the scupper grates shall remain cast iron. Fillet or full penetration welds shall be used for the weldments. Details shall be submitted to the Engineer for approval.

Structural steel scupper frames and downspouts, when utilized, shall be galvanized according to AASHTO M111.

As an alternate, fiberglass may be used for downspouts according to ASTM D2996 with a short-time rupture strength hoop tensile stress of 30,000 psi min. in lieu of the cast iron or structural steel.

Exterior surfaces of downspouts and exterior exposed surfaces of the scupper frame below deck shall be treated as specified on sheet 15 of 39.

The Contractor shall take appropriate measures to assure that Protective Coat is not applied to the scupper.

Cost of the grate, frame, downspout, anchor rods, nuts and washers including complete installation of the scupper shall be paid for at the contract unit price for Drainage Scuppers, DS-11.

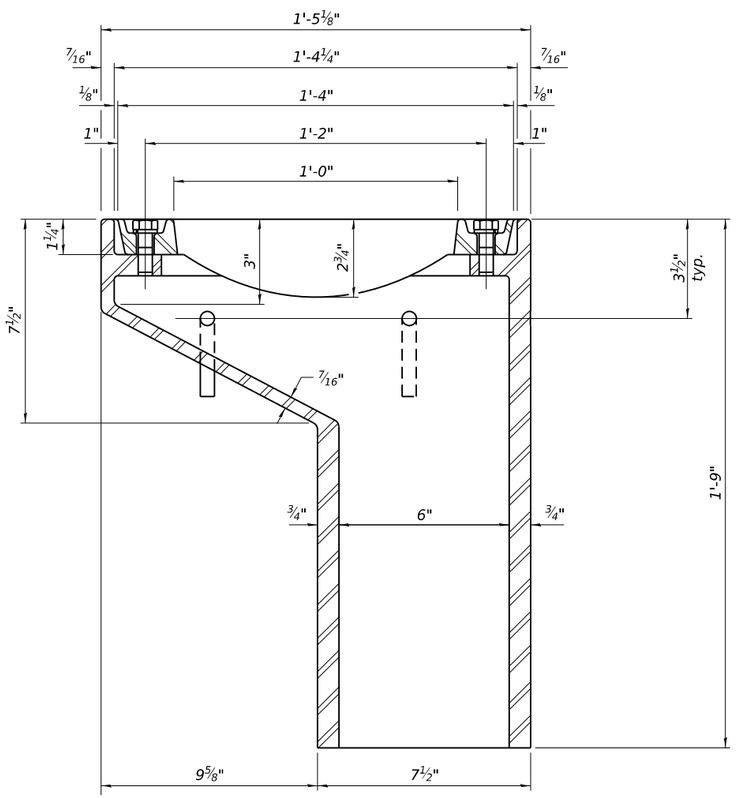

SECTION A-A

See sheet 13 of 39 for scupper location relative to parapet.

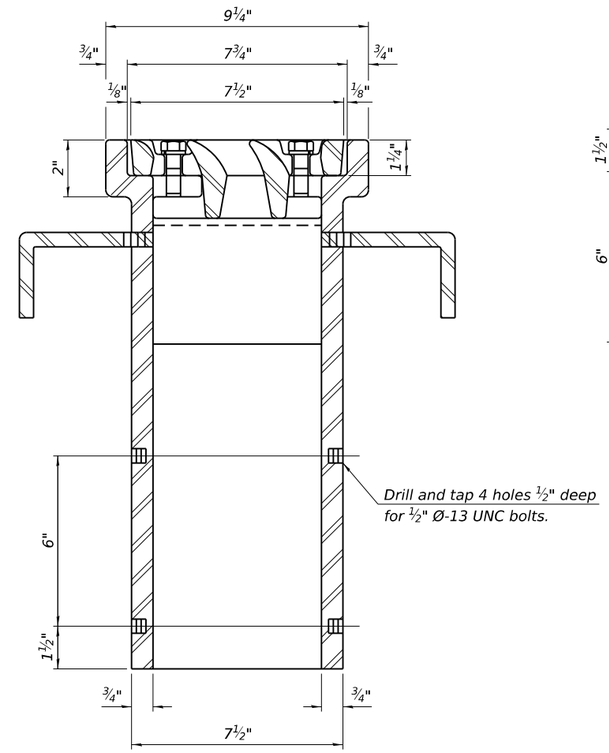

SECTION B-B

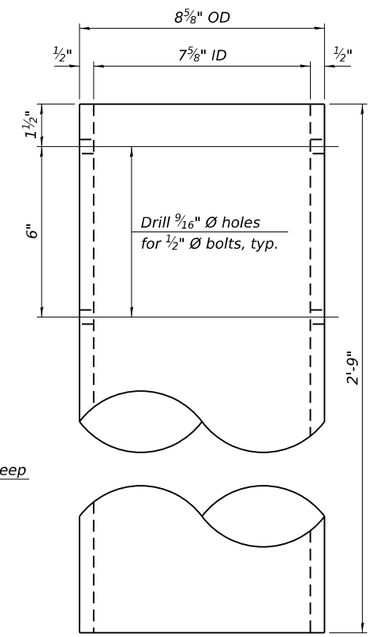

DOWNSPOUT

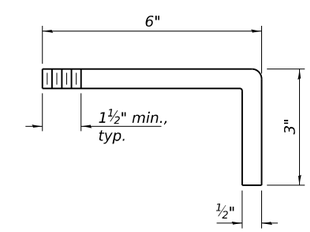

ANCHOR ROD DETAIL

BILL OF MATERIAL

Item	Unit	Quantity
Drainage Scuppers, DS-11	Each	5

DS-11 4-4-2025

MODEL: $MODELNAMES
FILE NAME: D876E84-039-0018-0019-DS11.dgn

Jacobs
525 West Monroe
Suite 1600
Chicago, IL 60661
(312) 251-3000

USER NAME = jacobspw18lcs09$	DESIGNED - CJF	REVISED -	
	DRAWN - EAK	REVISED -	
PLOT SCALE = 2.000 ' / in.	CHECKED - ED	REVISED -	
PLOT DATE = 12/4/2025	DATE - 2025/10/03	REVISED -	

STATE OF ILLINOIS
DEPARTMENT OF TRANSPORTATION

DRAINAGE SCUPPERS, DS-11
STRUCTURE NO. 082-0018 (WB) & 082-0019 (EB)

SCALE: NTS | SHEET 39 OF 39 SHEETS | STA. | TO STA.

F.A.I. RTE.	SECTION	COUNTY	TOTAL SHEETS	SHEET NO.
70	Section82-(5,6)RS-2, 60-6RS-2	MADISON & ST. CLAIR	678	410

CONTRACT NO. 76E84

ILLINOIS | FED. AID PROJECT

Benchmark: Aluminum Disk in concrete swale (top of paved ditch) in median of Ramp from I-55/70 NB to IL 203 SB. ELEV. = 424.55'

Existing Structure: Structure Number 082-0022 IL 203 (SB) Ramp to I-55/70 (WB) over Drainage to Cahokia Canal was originally built in 1960 under Project I-70-1(22)2. The existing superstructure consists of three straight continuous non-composite steel beam spans with a radial concrete deck. The radial deck has an out to out width of 35'-8". The superstructure is supported on concrete pile bent piers and stub abutments. The structure is 95'-2½" from back to back abutments. The bridge has never been repainted. The existing bridge paint does contain lead.

Traffic Control: Traffic is to be maintained using staged construction.

No Salvage.

DESIGN STRESSES

FIELD UNITS (New Const.)

f'c = 4,000 psi (Superstructure)
fy = 60,000 psi (Reinforcement)

FIELD UNITS (Exist. Const.)

f'c = 3,500 psi (Superstructure)
f'c = 3,500 psi (Substructure)
fy = 40,000 psi (Reinforcement)
fy = 33,000 psi (Structural Steel)

SCOPE OF WORK

1. Remove and replace bridge decks and add shear studs to existing beams to make them composite.
2. Remove approach pavements, approach bent cap and top 12" of existing timber pile and replace with new bridge approach slabs.
3. Remove abutment backwalls and convert to semi-integral abutments, while providing new drainage system behind abutments.
4. Remove and reconfigure wingwalls for construction of new approach slabs. Rebuild concrete slope walls around newly configured wingwalls.
5. Complete formed concrete repairs on abutments.
6. Remove end diaphragms.
7. Remove and replace existing approach guardrail terminals.
8. Clean and paint existing structural steel and bearings.

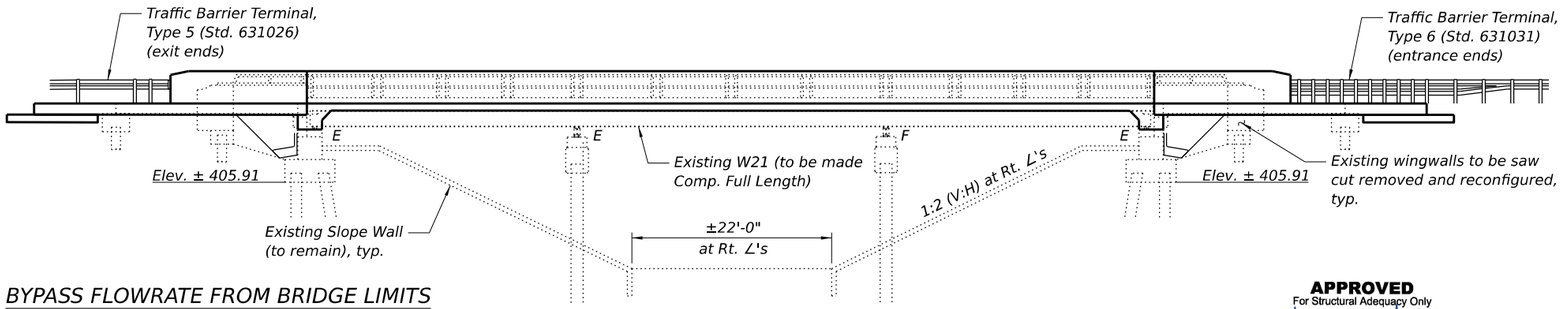

ELEVATION

LOADING HL-93

Allow 25#/sq. ft. for future wearing surface

SEISMIC DATA

Seismic Retrofit Category (SRC) = B
Design Spectral Acceleration at 1.0 sec. (SD1) = 0.226g
Design Spectral Acceleration at 0.2 sec. (SDS) = 0.439g
Soil Site Class = D
Performance Level (PL)= PL 1

BYPASS FLOWRATE FROM BRIDGE LIMITS (END OF APPROACH SLAB) TO ROADWAY

	NW Curbline	SW Curbline	NE Curbline	SW Curbline
Q (C.F.S.)	0.24	0.06	0	0

APPROVED
For Structural Adequacy Only
Engineer of Bridges & Structures

LICENSED STRUCTURAL ENGINEER
CHADWICK J. FUESTING
081-005834
STATE OF ILLINOIS

Chad Fuesting
EXPIRES: 11/30/2026
DATE: 12/04/2025

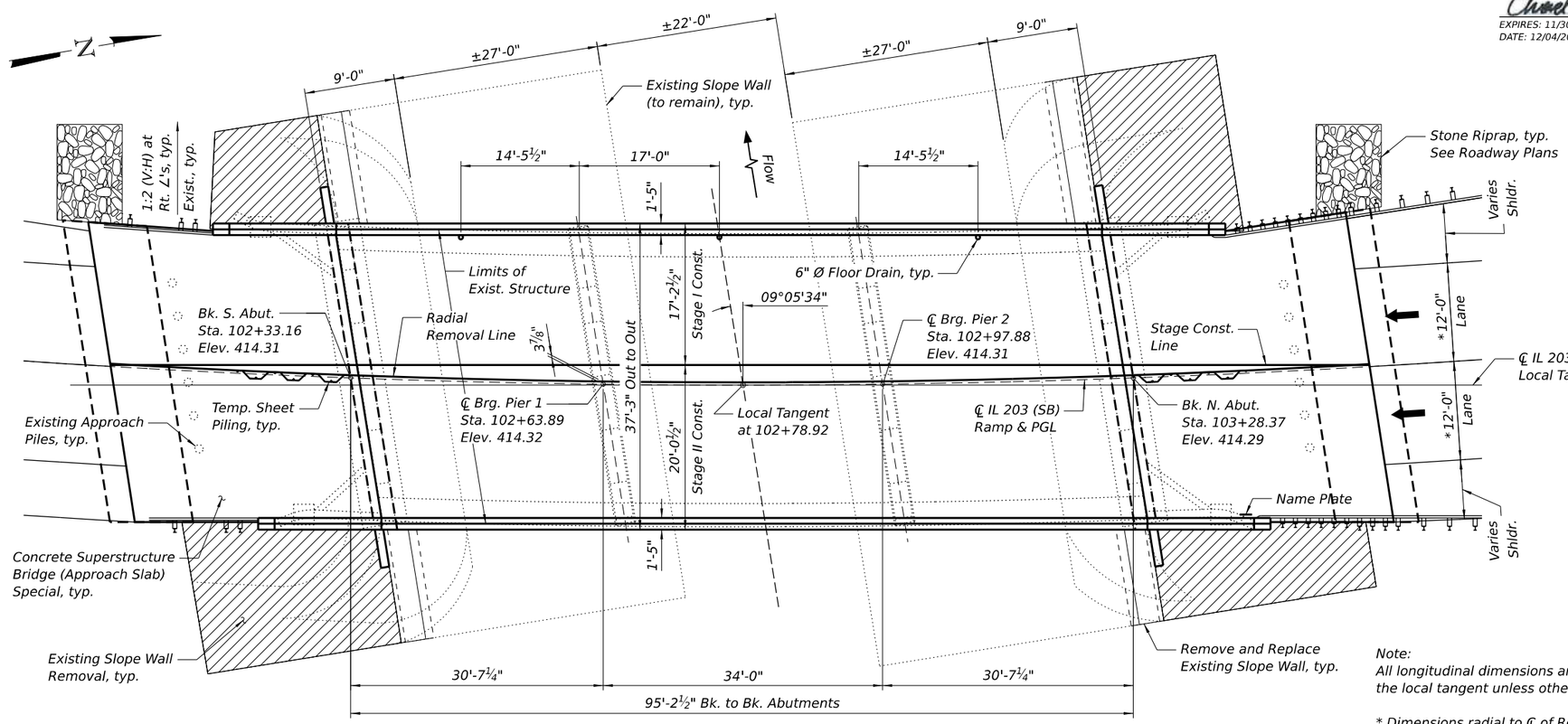

PLAN

Note:
All longitudinal dimensions are measured along the local tangent unless otherwise noted.

* Dimensions radial to ℄ of Roadway.

DESIGN SPECIFICATIONS

(New Construction)
2024 AASHTO LRFD Bridge Design Specifications, 10th Edition

(Existing Construction)
2002 AASHTO Standard Specifications for Highway Bridges, 17th Edition

2006 Seismic Retrofitting Manual for Highway Structures Part 1 - Bridges (FHWA-HRT-06-032)

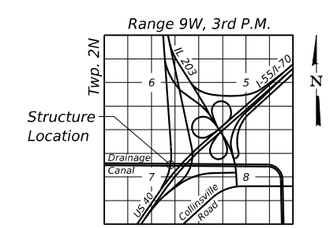

LOCATION SKETCH

GENERAL PLAN AND ELEVATION
IL 203 (SB) RAMP TO I-55 / I-70
OVER DRAINAGE TO CAHOKIA CANAL
F.A.I. 70 - SEC. 82-(5,6)RS-2
MADISON & ST. CLAIR COUNTY
STATION 102+78.92
STRUCTURE NO. 082-0022

MODEL: $MODELNAMES
FILE NAME: D876E84-001-0022-GPE.dgn

Jacobs
525 West Monroe
Suite 1600
Chicago, IL 60661
(312) 251-3000

USER NAME = jacobspw18ics11$	DESIGNED - CJF	REVISED -	
	DRAWN - EAK	REVISED -	
PLOT SCALE = 0.16666667 ' / in.	CHECKED - ED	REVISED -	
PLOT DATE = 12/4/2025	DATE - 2025/10/03	REVISED -	

STATE OF ILLINOIS
DEPARTMENT OF TRANSPORTATION

GENERAL PLAN & ELEVATION
STRUCTURE NO. 082–0022

SCALE: NTS | SHEET 1 OF 24 SHEETS | STA. | TO STA.

F.A.I. RTE.	SECTION	COUNTY	TOTAL SHEETS	SHEET NO.
70	Section82-(5,6)RS-2, 60-6RS-2	MADISON & ST. CLAIR	678	411
		CONTRACT NO. 76E84		
		ILLINOIS	FED. AID PROJECT	

GENERAL NOTES

No field welding is permitted except as specified in the contract documents.

Reinforcement bars designated (E) shall be epoxy coated.

The finishing machine rails shall be placed on the top of the top flange of the exterior beams within the deck pour. Beam blocks shall be placed between beams at all tie locations in each bay for the full width of the deck pour.

Prior to pouring the new concrete deck, all heavy or loose rust, loose mill scale, and other loose detrimental foreign material shall be removed from the surfaces in contact with concrete (SSPC – SP3 standards). Tightly adhered paint may remain unless otherwise noted. Removal shall be accomplished by methods that will not damage the steel and the cost will be paid for according to Article 109.04 of the Standard Specifications.

As directed by the Engineer, existing construction accessories welded to the top flange of beams and girders shall be removed. The weld areas shall be ground flush and inspected for cracks using magnetic particle testing (MT) or dye penetrant testing (PT) by qualified personnel approved by the Engineer. Any cracks that cannot be removed by grinding ¼ in. deep shall be identified and reported to the Bureau of Bridges & Structures for further disposition. The cost of removing welded accessories, grinding and inspecting weld areas and grinding cracks will be paid for according to Article 109.04 of the Standard Specifications.

Plan dimensions and details relative to the existing structure have been taken from existing plans are subject to nominal construction variations. The Contactor shall field verify existing dimensions and details affecting new construction and make necessary approved adjustments prior to construction or ordering of materials. Such variations shall not be cause for additional compensation for a change in scope of the work, however, the Contractor will be paid for the quantity actually furnished at the unit price bid for the work.

The existing structural steel coating contains lead. The Contractor shall take appropriate precautions to address the presence of lead on this project.

Cleaning and painting of the existing structural steel shall be as specified in the special provision for "Cleaning and Painting Existing Steel Structures". All beams, bearings and other structural steel shall be cleaned per Near White Blast Cleaning - SSPC-SP10.

All beams, bearings and other structural steel cleaned per Near White Blast Cleaning shall be painted according to the requirements of the Organic Zinc-Rich Primer/Epoxy Intermediate Coat/Urethane Topcoat (OZ/E/U). The color of the final finish coat for all interior steel surfaces shall be Gray, Munsell No 5B 7/1. The color of the final finish coat for the exterior and bottom flange of the fascia beams shall be Gray (Munsell No. 5B 7/1).

A minimum of 1 air monitors will be required to monitor abrasive blasting operations at this site. See special provision "Containment and Disposal of Lead Paint Cleaning Residues."

SSPC QP1 and SSPC QP2 Contractor Certification is required for this Contract.

Layout of the slope protection system may be varied to suit ground conditions in the field as directed by the Engineer.

INDEX OF SHEETS

1	General Plan & Elevation
2	General Data
3	Section Thru. Abut., Temp. Sheet Piling, & Appr. Slab Removal
4	Stage Construction Details
5	Temporary Concrete Barrier
6	Top of Slab Layout
7	Top of Slab Elevations
8	Top of Approach Slab Elevations
9	Superstructure
10	Superstructure Details
11	South Diaphragm Details
12	North Diaphragm Details
13-14	Bridge Approach Slab Details
15	Structural Steel
16	Structural Steel Details
17	South Abutment Removal Details
18	North Abutment Removal Details
19	South Abutment
20	North Abutment
21	Existing Slope Wall Removal
22	Slope Wall Replacement
23	Bar Splicer Assembly and Mechanical Splicer Details
24	Concrete Parapet Slipforming Option

STA. 102+78.92
RE-BUILT 202_ BY
STATE OF ILLINOIS
F.A.I. RT. 70
SEC. 82-(5,6)RS-2
LOADING HL-93
STR. NO. 082-0022

NAME PLATE

See Std. 515001

Existing Name Plate shall be cleaned and relocated next to new Name Plate. Cost included with Name Plates.

TOTAL BILL OF MATERIAL

ITEM	UNIT	SUPER	SUB	TOTAL
Concrete Removal	Cu. Yd.	-	35.2	35.2
Slope Wall Removal	Sq. Yd.	-	224	224
Removal of Existing Concrete Deck No. 3	Each	1	-	1
Structure Excavation	Cu. Yd.	-	167	167
Floor Drains	Each	3	-	3
Concrete Structures	Cu. Yd.	-	36.0	36.0
Concrete Superstructure	Cu. Yd.	147.4	-	147.4
Bridge Deck Grooving	Sq. Yd.	560	-	560
Protective Coat	Sq. Yd.	716	-	716
Stud Shear Connectors	Each	2,856	-	2,856
Reinforcement Bars, Epoxy Coated	Pound	77,480	3,490	80,970
Bar Splicers	Each	603	-	603
Slope Wall 6 Inch	Sq. Yd.	-	100	100
Name Plates	Each	1	-	1
Temporary Sheet Piling	Sq. Ft.	-	94	94
Granular Backfill for Structures	Cu. Yd.	-	168	168
Geocomposite Wall Drain	Sq. Yd.	-	52	52
Pipe Underdrains for Structures 4"	Foot	-	101	101
Concrete Superstructure (Approach Slab), Special	Cu. Yd.	100.3	-	100.3
Concrete Removal (Special)	Cu. Yd.	-	5.0	5.0
Structural Steel Removal	Pound	2,310	-	2,310
Containment and Disposal of Lead Paint Cleaning Residues No. 3	L. Sum	1	-	1
Bar Terminators	Each	74	-	74
Cleaning and Painting Steel Bridge No. 3	L. Sum	1	-	1
Structural Repair of Concrete (Depth Equal to or Less Than 5 inches)	Sq. Ft.	-	63	63
Approach Slab Removal	Sq. Yd.	-	175	175

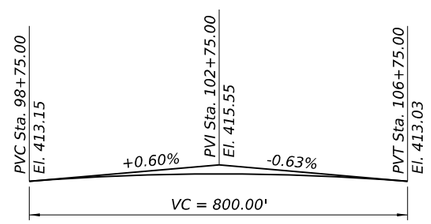

PROFILE GRADE

(Along ℄ IL 203 SB Ramp)

CURVE DATA

P.I. Sta. = 101+70.11
Δ = 28°36'03" (LT)
D = 4°24'00"
R = 1302.18'
T = 331.93'
L = 650.02'
E = 41.64'
SE = 5.8%
P.C. Sta. = 98+38.17
P.T. Sta. = 104+88.19

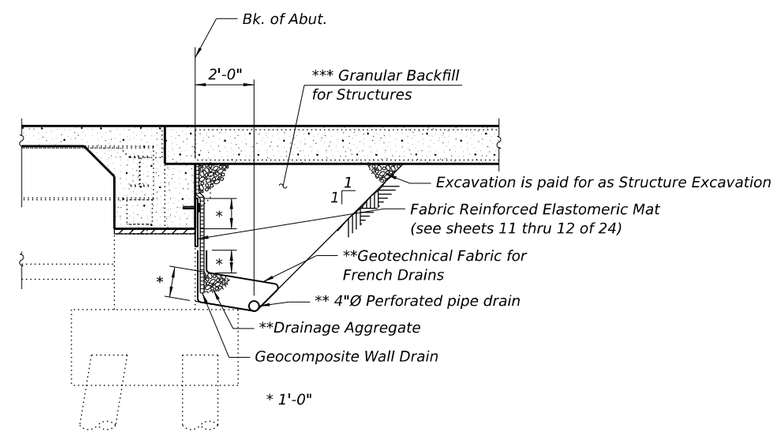

SECTION THRU SEMI-INTEGRAL ABUTMENT

(Horizontal dimensions at right angles)
(North Abutment shown; South Abutment similar)

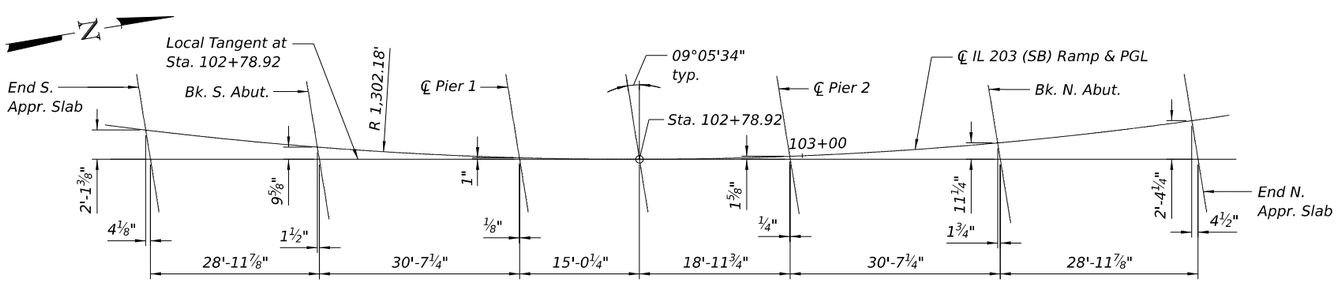

OFFSET SKETCH

Note:
All drainage system components shall extend to 2'-0" from end of each wingwall except an outlet pipe shall extend until intersecting with the side slopes. The pipes shall drain into concrete headwalls. (See Article 601.05 of the Standard Specifications and Highway Standard 601101).

** Included in the cost of Pipe Underdrains for Structures.
*** Granular Backfill behind abutments shall be compacted according to Article 205.06 of the Standard Specifications. No compaction is allowed 2'-0" behind the Back of Abutment.

MODEL: $MODELNAME$
FILE NAME: D876E84-002-0022-GENERAL.dgn

Jacobs
525 West Monroe
Suite 1600
Chicago, IL 60661
(312) 251-3000

USER NAME = jacobspw18ics09$	DESIGNED - CJF	REVISED -	
	DRAWN - EAK	REVISED -	
PLOT SCALE = 0.16666667 ' / in.	CHECKED - ED	REVISED -	
PLOT DATE = 12/4/2025	DATE - 2025/10/03	REVISED -	

STATE OF ILLINOIS
DEPARTMENT OF TRANSPORTATION

GENERAL DATA
STRUCTURE NO. 082–0022

SCALE: NTS | SHEET 2 OF 24 SHEETS | STA. | TO STA.

F.A.I. RTE.	SECTION	COUNTY	TOTAL SHEETS	SHEET NO.
70	Section82-(5,6)RS-2, 60-6RS-2	MADISON & ST. CLAIR	678	412

CONTRACT NO. 76E84
ILLINOIS | FED. AID PROJECT

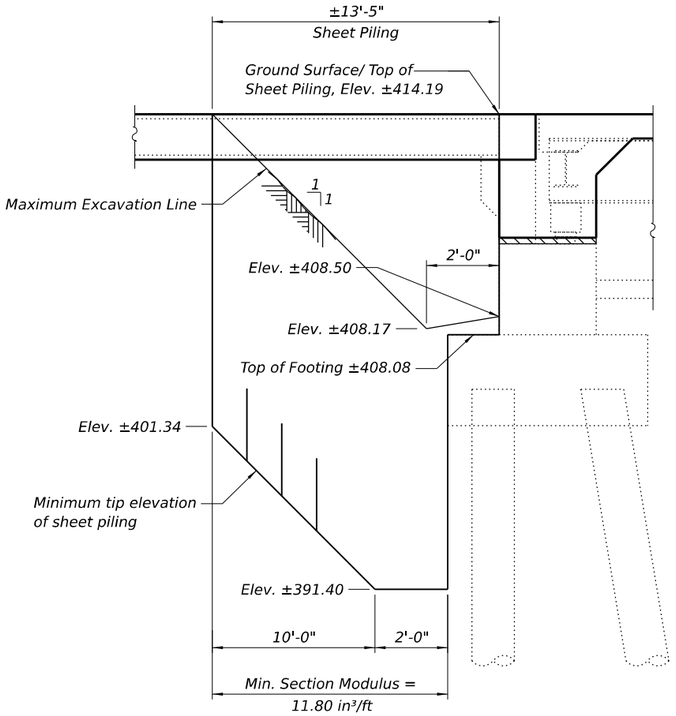

SOUTH ABUTMENT
TEMPORARY SHEET PILING
(Looking West)

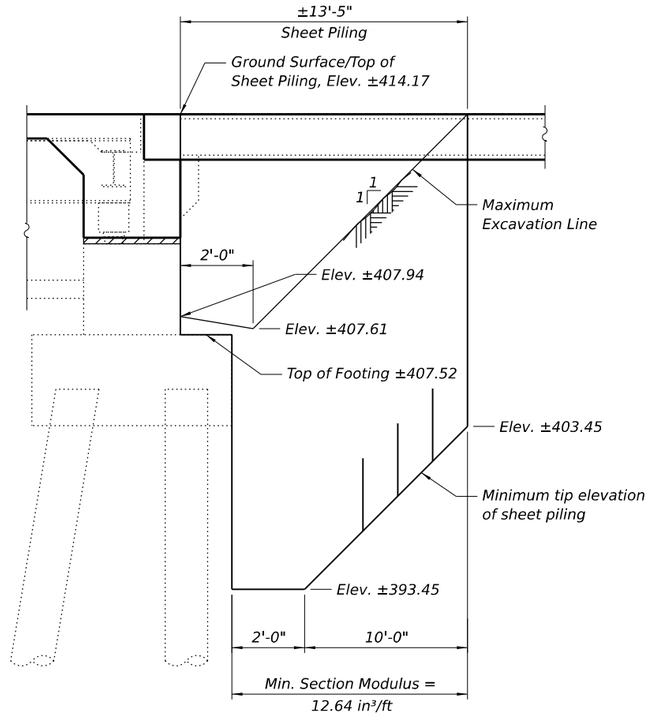

NORTH ABUTMENT
TEMPORARY SHEET PILING
(Looking West)

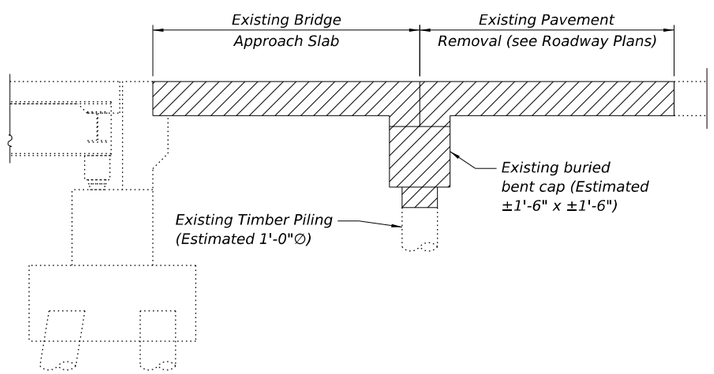

APPROACH SLAB REMOVAL

Removal of the existing approach slab shall be paid for as Approach Slab Removal. The removal of the existing buried bent cap shall include removal of the top 2'-0" of existing piling and shall be paid for as Concrete Removal (Special).

See sheet 17 and 18 of 24 for additional removal details.

BILL OF MATERIAL

ITEM	UNIT	TOTAL
Temporary Sheet Piling	Sq. Ft.	94
Granular Backfill for Structures	Cu. Yd.	168
Geocomposite Wall Drain	Sq. Yd.	52
Pipe Underdrains for Structures 4"	Foot	101
Approach Slab Removal	Sq. Yd.	175

Notes:
If the Contractor chooses to alter the temporary cantilevered sheet piling design requirements shown on the plans, a design submittal including plan details and calculations will be required for review and acceptance by the Engineer.

The Contractor shall connect the first sheet to the existing abutment wall to ensure stability of sheets driven to the top of the existing footing. This connection shall be reviewed and accepted by the Engineer and included in the cost for Temporary Sheet Piling.

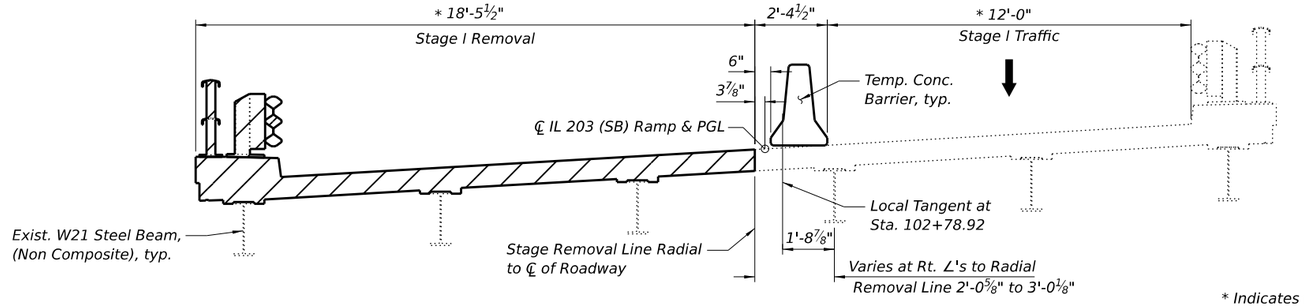

STAGE I REMOVAL AND TRAFFIC

(Looking North)

* Indicates the dimension is taken radial to the ℄ of the Roadway.

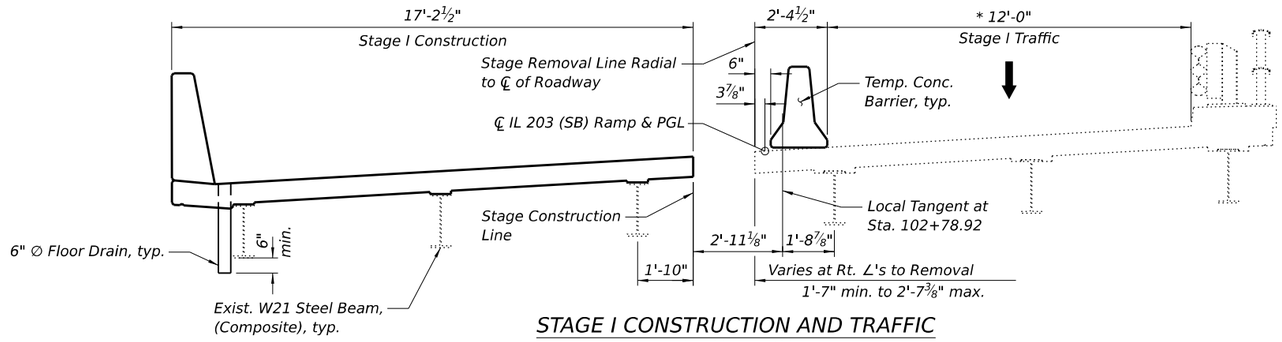

STAGE I CONSTRUCTION AND TRAFFIC

(Looking North)

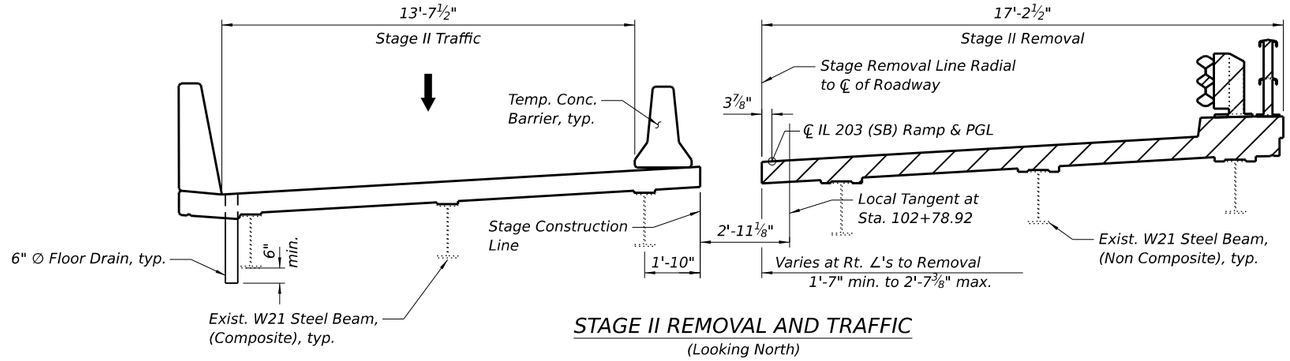

STAGE II REMOVAL AND TRAFFIC

(Looking North)

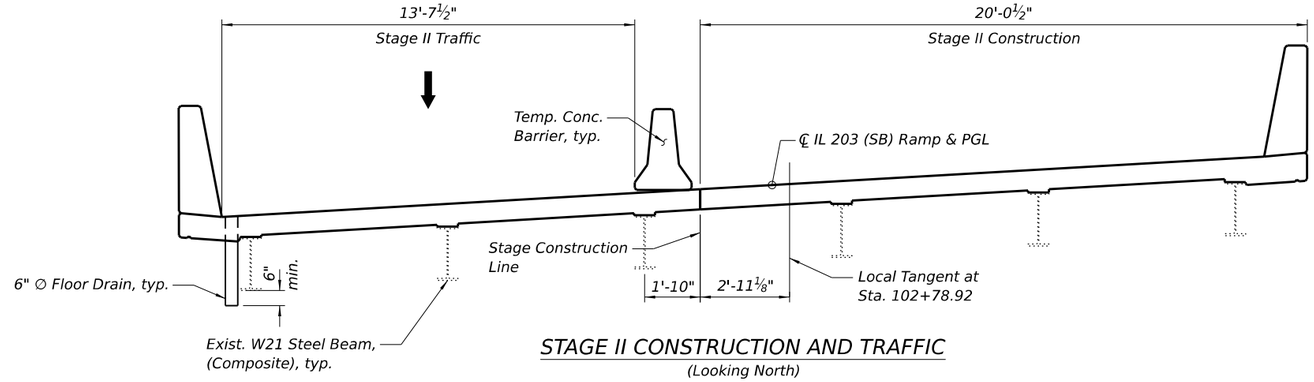

STAGE II CONSTRUCTION AND TRAFFIC

(Looking North)

Notes:

Hatch sections represents limits of Removal.

See Offset Sketch on Sheet 2 of 24 for offsets between tangent lines and ℄ or PG's.

All transverse dimensions are at right angles to local tangent unless noted otherwise.

MODEL: $MODELNAME$
FILE NAME: D876E84-0014-0022-STAGE.dgn

Jacobs
525 West Monroe
Suite 1600
Chicago, IL 60661
(312) 251-3000

USER NAME = $jacobspw18ics10$	DESIGNED - CJF	REVISED -	
	DRAWN - EAK	REVISED -	
PLOT SCALE = 0.16666667 ' / in.	CHECKED - ED	REVISED -	
PLOT DATE = 12/4/2025	DATE - 2025/10/03	REVISED -	

STATE OF ILLINOIS
DEPARTMENT OF TRANSPORTATION

STAGE CONSTRUCTION DETAILS
STRUCTURE NO. 082-0022

SCALE: NTS | SHEET 4 OF 24 SHEETS | STA. | TO STA.

F.A.I. RTE.	SECTION	COUNTY	TOTAL SHEETS	SHEET NO.
70	Section82-(5,6)RS-2, 60-6RS-2	MADISON & ST. CLAIR	678	414

CONTRACT NO. 76E84

ILLINOIS | FED. AID PROJECT

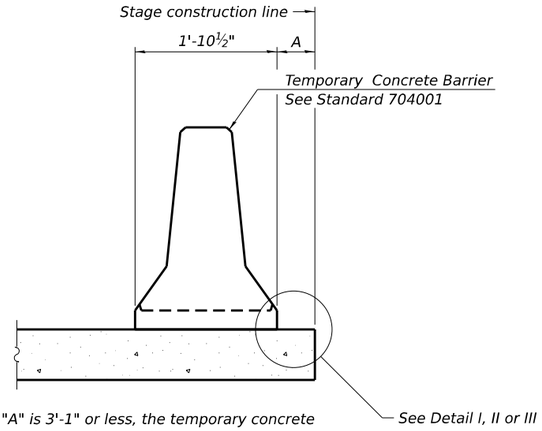

When "A" is 3'-1" or less, the temporary concrete barrier shall be restrained to the new slab according to Detail I, II or III. No restraint is required when "A" is greater than 3'-1".

NEW SLAB OR NEW DECK BEAM

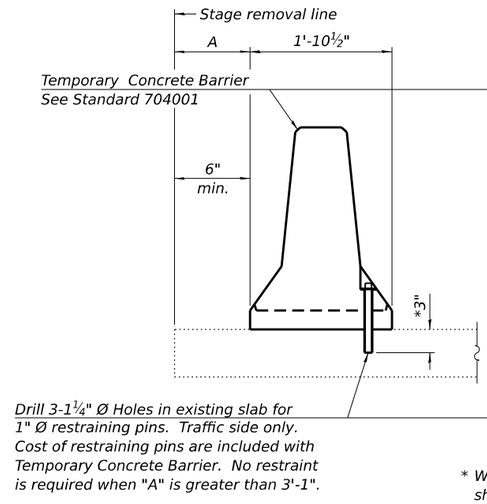

EXISTING SLAB

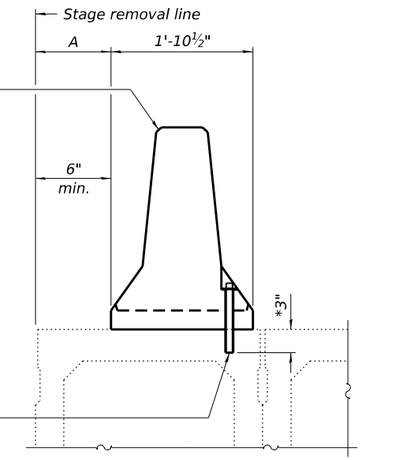

* When hot-mix asphalt wearing surface is present, embedment shall be 3" plus the wearing surface depth.

EXISTING DECK BEAM

SECTIONS THRU SLAB OR DECK BEAM

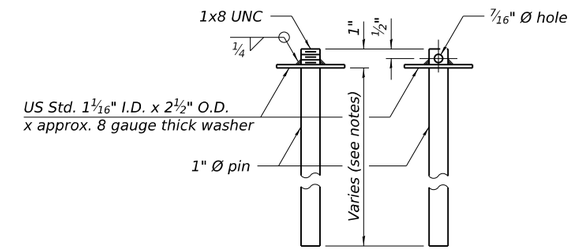

RESTRAINING PIN

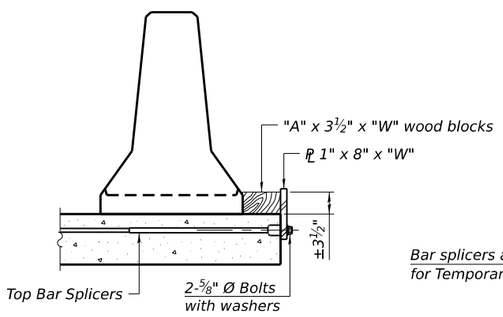

DETAIL I

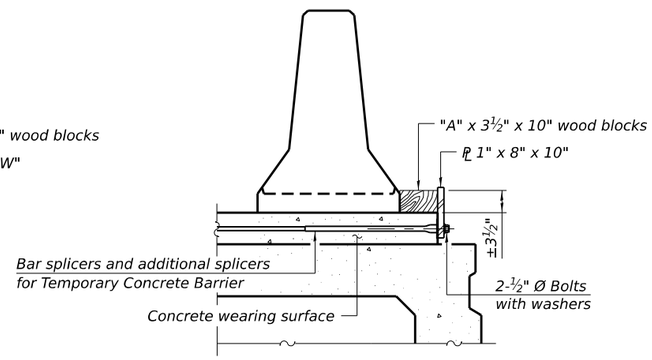

DETAIL II

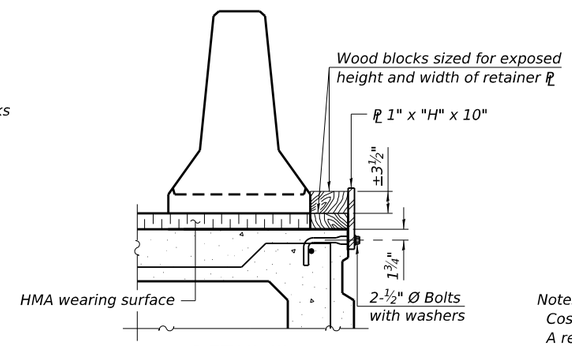

DETAIL III

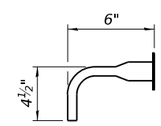

BAR SPLICER FOR #4 BAR - DETAIL III

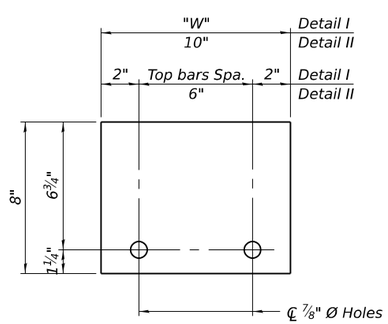

STEEL RETAINER PL 1" x 8" x "W"

(Detail I and II)

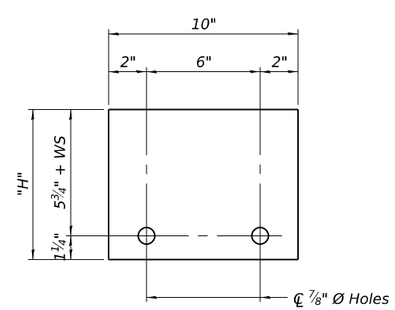

STEEL RETAINER PL 1" x "H" x 10"

(Detail III)

Notes:

Cost of retainer assembly is included with Temporary Concrete Barrier.

A retainer assembly shall be located at the approximate ℄ of each temporary concrete barrier.

The retainer plate shall not be removed until the concrete on the adjacent stage is ready to be poured. For Detail III applications the retainer plate shall not be removed until just prior to placing the adjacent beam.

When the 'A' dimension is less than 1½", the wood block shall be omitted and the barrier shall be placed in direct contact with the steel retainer plate. For deck beam applications the minimum required 'A' distance is 6" to accommodate the shear key clamping device.

Detail I - Installation for a new bridge deck or bridge slab.

Detail II - Installation for a new deck beam with an initial concrete wearing surface. Additional bar splicers shall be provided at 6'-0" centers and paired with the bar splicers of the concrete wearing surface reinforcement to accommodate the installation of the retainer assemblies. The cost of the additional bar splicers is included with the concrete wearing surface.

Detail III - Installation for a new deck beam with no initial wearing surface or with an initial hot-mix asphalt (HMA) wearing surface present. The deck beam directly beneath the temporary concrete barrier shall be fabricated with bar splicer inserts in the side of the beam, as detailed, to accommodate the installation of the retainer assemblies. A pair of bar splicers, 6" apart, shall be placed at 6'-0" centers along the length of the beam. The cost of the bar splicers is included with the deck beam.

RAILING CRITERIA

NCHRP 350 Test Level	3
Railing Weight (plf)	440

R-27

5-15-2023

MODEL: $MODELNAME$
FILE NAME: D876E84-005-0022-TEMPCONCBARRIER.dgn

Jacobs
525 West Monroe
Suite 1600
Chicago, IL 60661
(312) 251-3000

USER NAME = jacobspw18ics11$	DESIGNED - CJF	REVISED -	
	DRAWN - EAK	REVISED -	
PLOT SCALE = 0.16666667 ' / in.	CHECKED - ED	REVISED -	
PLOT DATE = 12/4/2025	DATE - 2025/10/03	REVISED -	

STATE OF ILLINOIS
DEPARTMENT OF TRANSPORTATION

TEMPORARY CONCRETE BARRIER
STRUCTURE NO. 082-0022

SCALE: NTS | SHEET 5 OF 24 SHEETS | STA. | TO STA.

F.A.I. RTE.	SECTION	COUNTY	TOTAL SHEETS	SHEET NO.
70	Section82-(5,6)RS-2, 60-6RS-2	MADISON & ST. CLAIR	678	415
		CONTRACT NO. 76E84		
		ILLINOIS FED. AID PROJECT		

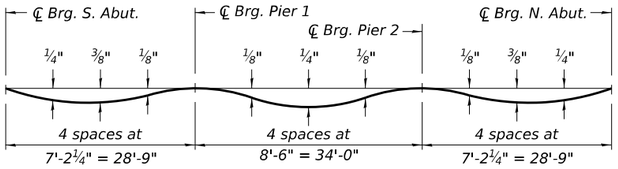

DEAD LOAD DEFLECTION DIAGRAM

(Includes weight of concrete only.)

Note:
The above deflections are not to be used in the field if the engineer is working from the grade elevations adjusted for dead load deflections as shown on sheet 7 of 24.

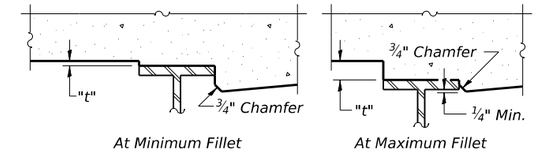

To determine "t": After all structural steel has been erected, elevations of the top flanges of the beams shall be taken at intervals shown to the lower left. These elevations subtracted from the "Theoretical Grade Elevations Adjusted for Dead Load Deflection" shown on sheet 7 of 24, minus slab thickness, equals the fillet heights "t" above top flange of beams.

FILLET HEIGHTS

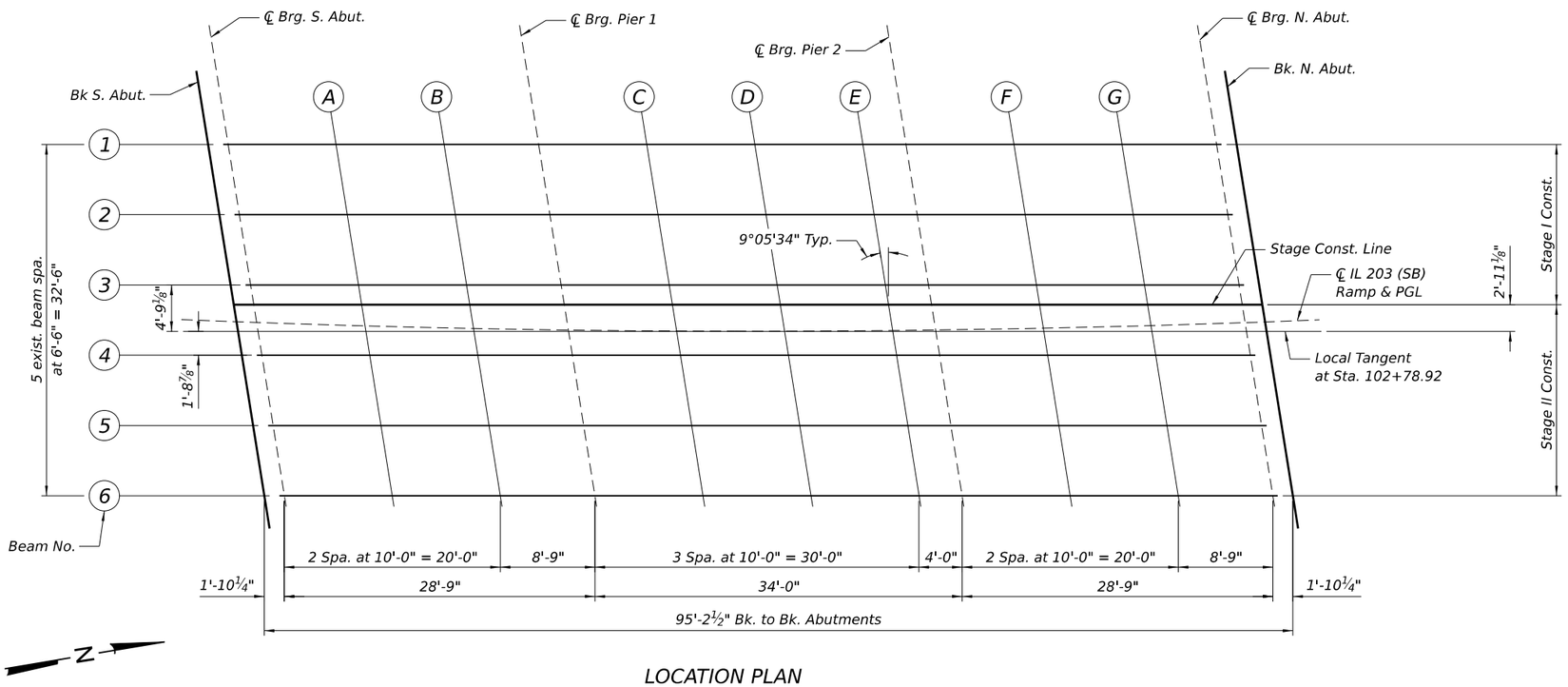

LOCATION PLAN

MODEL: $MODELNAMES
FILE NAME: D876E84-006-0022-TOS PLAN.dgn

Jacobs
525 West Monroe
Suite 1600
Chicago, IL 60661
(312) 251-3000

USER NAME = Jacobspw18lcs09$	DESIGNED - CJF	REVISED -	
	DRAWN - EAK	REVISED -	
PLOT SCALE = 0.16666667 ' / in.	CHECKED - ED	REVISED -	
PLOT DATE = 12/4/2025	DATE - 2025/10/03	REVISED -	

STATE OF ILLINOIS
DEPARTMENT OF TRANSPORTATION

TOP OF SLAB LAYOUT
STRUCTURE NO. 082-0022

SCALE: NTS | SHEET 6 OF 24 SHEETS | STA. | TO STA.

F.A.I. RTE.	SECTION	COUNTY	TOTAL SHEETS	SHEET NO.
70	Section82-(5,6)RS-2, 60-6RS-2	MADISON & ST. CLAIR	678	416

CONTRACT NO. 76E84

ILLINOIS | FED. AID PROJECT

BEAM 1

Location	Station	Offset	Theoretical Grade Elevations	Theoretical Grade Elevations Adjusted For Dead Load Deflection
Bk. S. Abut	102+29.83	-16.84	413.33	413.33
℄ Brg. S. Abut.	102+31.71	-16.91	413.33	413.33
A	102+41.84	-17.24	413.32	413.33
B	102+51.97	-17.48	413.31	413.31
℄ Brg. Pier 1	102+60.84	-17.63	413.30	413.30
C	102+70.98	-17.73	413.29	413.30
D	102+81.12	-17.75	413.29	413.30
E	102+91.26	-17.70	413.29	413.29
℄ Brg. Pier 2	102+95.31	-17.65	413.29	413.29
F	103+05.50	-17.49	413.29	413.30
G	103+15.58	-17.25	413.30	413.31
℄ Brg. N. Abut.	103+24.44	-16.97	413.31	413.31
Bk. N. Abut	103+26.32	-16.90	413.31	413.31

BEAM 2

Location	Station	Offset	Theoretical Grade Elevations	Theoretical Grade Elevations Adjusted For Dead Load Deflection
Bk. S. Abut	102+31.12	-10.39	413.71	413.71
℄ Brg. S. Abut.	102+32.99	-10.45	413.71	413.71
A	102+43.07	-10.77	413.69	413.70
B	102+53.15	-11.00	413.68	413.69
℄ Brg. Pier 1	102+61.97	-11.15	413.67	413.67
C	102+72.06	-11.24	413.67	413.67
D	102+82.15	-11.25	413.67	413.67
E	102+92.23	-11.19	413.67	413.67
℄ Brg. Pier 2	102+96.27	-11.14	413.67	413.67
F	103+06.40	-10.97	413.67	413.68
G	103+16.43	-10.72	413.68	413.69
℄ Brg. N. Abut.	103+25.25	-10.44	413.69	413.69
Bk. N. Abut	103+27.12	-10.37	413.69	413.31

BEAM 3

Location	Station	Offset	Theoretical Grade Elevations	Theoretical Grade Elevations Adjusted For Dead Load Deflection
Bk. S. Abut	102+32.50	-3.93	414.08	414.08
℄ Brg. S. Abut.	102+34.25	-3.99	414.08	414.08
A	102+44.28	-4.30	414.07	414.08
B	102+54.31	-4.52	414.06	414.06
℄ Brg. Pier 1	102+63.09	-4.66	414.05	414.05
C	102+73.13	-4.74	414.05	414.05
D	102+83.17	-4.75	414.04	414.05
E	102+93.20	-4.68	414.04	414.04
℄ Brg. Pier 2	102+97.22	-4.63	414.04	414.04
F	103+07.30	-4.45	414.05	414.06
G	103+17.28	-4.19	414.06	414.06
℄ Brg. N. Abut.	103+26.05	-3.91	414.07	414.07
Bk. N. Abut	103+27.91	-3.84	414.07	413.31

STAGE CONST. LINE

Location	Station	Offset	Theoretical Grade Elevations	Theoretical Grade Elevations Adjusted For Dead Load Deflection
Bk. S. Abut	102+32.75	-2.11	414.19	414.19
℄ Brg. S. Abut.	102+33.79	-2.14	414.19	414.19
A	102+44.62	-2.47	414.17	414.18
B	102+54.64	-2.70	414.16	414.17
℄ Brg. Pier 1	102+63.41	-2.83	414.16	414.16
C	102+73.43	-2.91	414.15	414.16
D	102+83.45	-2.92	414.15	414.16
E	102+93.47	-2.84	414.15	414.15
℄ Brg. Pier 2	102+97.48	-2.79	414.15	414.15
F	103+07.55	-2.61	414.16	414.16
G	103+17.52	-2.35	414.16	414.17
℄ Brg. N. Abut.	103+26.28	-2.06	414.17	414.17
Bk. N. Abut	103+28.13	-1.99	414.17	413.31

℄ IL 203 (SB) RAMP & PGL

Location	Station	Offset	Theoretical Grade Elevations	Theoretical Grade Elevations Adjusted For Dead Load Deflection
Bk. S. Abut	102+33.16	0.00	414.31	414.31
℄ Brg. S. Abut.	102+35.03	0.00	414.31	414.31
A	102+45.08	0.00	414.32	414.33
B	102+55.12	0.00	414.32	414.33
℄ Brg. Pier 1	102+63.89	0.00	414.32	414.32
C	102+73.90	0.00	414.32	414.32
D	102+83.90	0.00	414.32	414.32
E	102+93.89	0.00	414.31	414.31
℄ Brg. Pier 2	102+97.88	0.00	414.31	414.31
F	103+07.91	0.00	414.31	414.31
G	103+17.82	0.00	414.30	414.31
℄ Brg. N. Abut.	103+26.53	0.00	414.29	414.29
Bk. N. Abut	103+28.37	0.00	414.29	413.31

BEAM 4

Location	Station	Offset	Theoretical Grade Elevations	Theoretical Grade Elevations Adjusted For Dead Load Deflection
Bk. S. Abut	102+33.65	2.53	414.46	414.46
℄ Brg. S. Abut.	102+35.51	2.47	414.46	414.46
A	102+46.67	2.17	414.44	414.45
B	102+55.47	1.96	414.43	414.44
℄ Brg. Pier 1	102+64.20	1.83	414.43	414.43
C	102+74.19	1.75	414.42	414.43
D	102+84.18	1.75	414.42	414.43
E	102+94.16	1.83	414.42	414.42
℄ Brg. Pier 2	102+98.15	1.89	414.42	414.42
F	103+08.19	2.07	414.43	414.43
G	103+18.12	2.33	414.43	414.44
℄ Brg. N. Abut.	103+26.85	2.63	414.44	414.44
Bk. N. Abut	103+28.70	2.70	414.45	413.31

BEAM 5

Location	Station	Offset	Theoretical Grade Elevations	Theoretical Grade Elevations Adjusted For Dead Load Deflection
Bk. S. Abut	102+34.90	8.99	414.84	414.84
℄ Brg. S. Abut.	102+36.74	8.93	414.83	414.83
A	102+46.67	8.65	414.82	414.83
B	102+56.61	8.44	414.81	414.82
℄ Brg. Pier 1	102+65.30	8.32	414.80	414.80
C	102+75.24	8.25	414.80	414.80
D	102+85.17	8.26	414.80	414.80
E	102+95.11	8.35	414.80	414.80
℄ Brg. Pier 2	102+99.08	8.40	414.80	414.80
F	103+09.07	8.60	414.80	414.81
G	103+18.95	8.86	414.81	414.82
℄ Brg. N. Abut.	103+27.63	9.16	414.82	414.82
Bk. N. Abut	103+29.47	9.23	414.82	413.31

BEAM 6

Location	Station	Offset	Theoretical Grade Elevations	Theoretical Grade Elevations Adjusted For Dead Load Deflection
Bk. S. Abut	102+36.14	15.45	415.21	415.21
℄ Brg. S. Abut.	102+37.97	15.40	415.21	415.21
A	102+47.85	15.12	415.20	415.20
B	102+57.74	14.92	415.19	415.19
℄ Brg. Pier 1	102+66.39	14.80	415.18	415.18
C	102+76.28	14.75	415.18	415.18
D	102+86.16	14.76	415.17	415.18
E	102+96.05	14.86	415.18	415.18
℄ Brg. Pier 2	103+00.00	14.92	415.18	415.18
F	103+09.94	15.12	415.18	415.19
G	103+19.77	15.39	415.19	415.20
℄ Brg. N. Abut.	103+28.41	15.70	415.20	415.20
Bk. N. Abut	103+30.24	15.77	415.20	413.31

WEST EDGE OF SHOULDER

Location	Station	Offset	Theoretical Grade Elevations
S. End of South Appr. Slab	102+00.09	-17.33	413.28
A1	102+10.35	-17.26	413.30
A2	102+20.54	-17.42	413.30
N. End of South Appr. Slab	102+30.71	-17.83	413.28
S. End of North Appr. Slab	103+25.17	-17.90	413.25
A3	103+35.30	-17.51	413.27
A4	103+45.40	-17.28	413.27
N. End of North Appr. Slab	103+55.47	-17.21	413.26

WEST EDGE OF ROADWAY

Location	Station	Offset	Theoretical Grade Elevations
S. End of South Appr. Slab	102+01.28	-12.00	413.59
A1	102+11.48	-12.00	413.60
A2	102+21.66	-12.00	413.61
N. End of South Appr. Slab	102+31.83	-12.00	413.62
S. End of North Appr. Slab	103+25.94	-12.00	413.60
A3	103+35.94	-12.00	413.59
A4	103+45.97	-12.00	413.57
N. End of North Appr. Slab	103+55.99	-12.00	413.56

STAGE CONST. LINE

Location	Station	Offset	Theoretical Grade Elevations
S. End of South Appr. Slab	102+03.76	-0.76	414.25
A1	102+13.76	-1.29	414.23
A2	102+23.76	-1.76	414.21
N. End of South Appr. Slab	102+33.79	-2.14	414.19
S. End of North Appr. Slab	103+27.14	-2.03	414.17
A3	103+37.13	-1.62	414.19
A4	103+47.13	-1.14	414.20
N. End of North Appr. Slab	103+57.12	-0.58	414.22

℄ IL 203 (SB) RAMP & PGL

Location	Station	Offset	Theoretical Grade Elevations
S. End of South Appr. Slab	102+03.93	0.00	414.29
A1	102+14.03	0.00	414.30
A2	102+24.11	0.00	414.31
N. End of South Appr. Slab	102+34.20	0.00	414.31
S. End of North Appr. Slab	103+27.39	0.00	414.29
A3	103+37.31	0.00	414.28
A4	103+47.25	0.00	414.27
N. End of North Appr. Slab	103+57.17	0.00	414.26

EAST EDGE OF ROADWAY

Location	Station	Offset	Theoretical Grade Elevations
S. End of South Appr. Slab	102+06.52	12.00	414.99
A1	102+16.53	12.00	415.00
A2	102+26.52	12.00	415.01
N. End of South Appr. Slab	102+36.49	12.00	415.01
S. End of North Appr. Slab	103+28.81	12.00	414.99
A3	103+38.65	12.00	414.98
A4	103+48.50	12.00	414.96
N. End of North Appr. Slab	103+58.33	12.00	414.95

EAST EDGE OF SHOULDER

Location	Station	Offset	Theoretical Grade Elevations
S. End of South Appr. Slab	102+07.73	17.67	415.32
A1	102+17.59	17.16	415.30
A2	102+27.45	16.73	415.28
N. End of South Appr. Slab	102+37.32	16.37	415.26
S. End of North Appr. Slab	103+29.36	16.69	415.26
A3	103+39.22	17.12	415.27
A4	103+49.07	17.62	415.29
N. End of North Appr. Slab	103+58.92	18.19	415.31

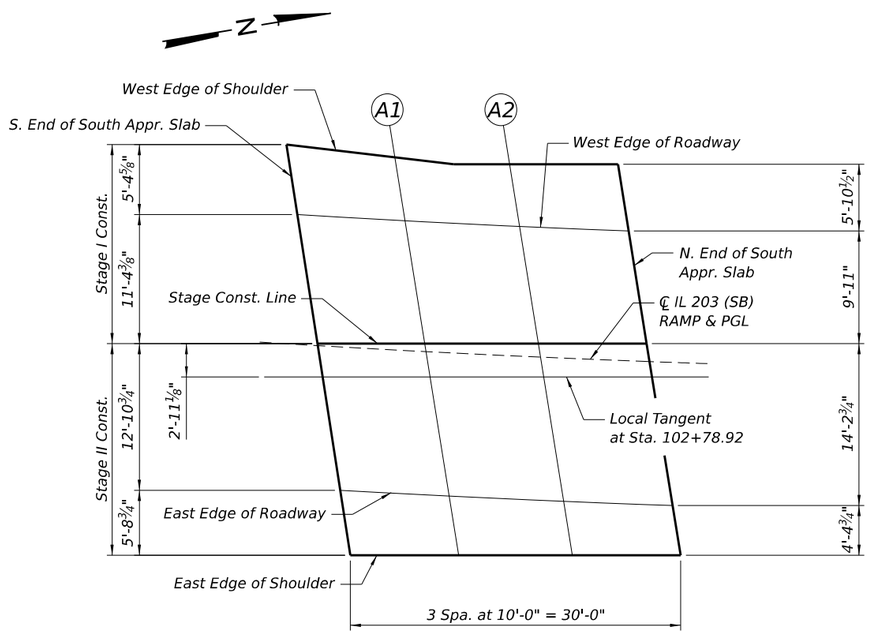

SOUTH APPROACH SLAB PLAN

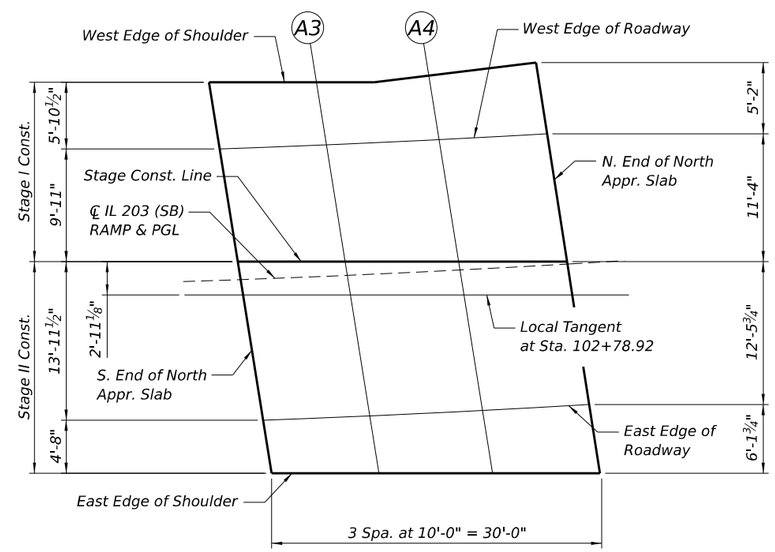

NORTH APPROACH SLAB PLAN

MODEL: $MODELNAMES
FILE NAME: D876E84-008-0022-TOS APP PLAN.dgn

Jacobs
525 West Monroe
Suite 1600
Chicago, IL 60661
(312) 251-3000

USER NAME = jacobspw18lcs11$	DESIGNED - CJF	REVISED -	
	DRAWN - EAK	REVISED -	
PLOT SCALE = 0.16666667 ' / in.	CHECKED - ED	REVISED -	
PLOT DATE = 12/4/2025	DATE - 2025/10/03	REVISED -	

STATE OF ILLINOIS
DEPARTMENT OF TRANSPORTATION

TOP OF APPROACH SLAB ELEVATIONS
STRUCTURE NO. 082–0022

SCALE: NTS | SHEET 8 OF 24 SHEETS | STA. | TO STA.

F.A.I. RTE.	SECTION	COUNTY	TOTAL SHEETS	SHEET NO.
70	Section82-(5,6)RS-2, 60-6RS-2	MADISON & ST. CLAIR	678	418
		CONTRACT NO. 76E84		
		ILLINOIS	FED. AID PROJECT	

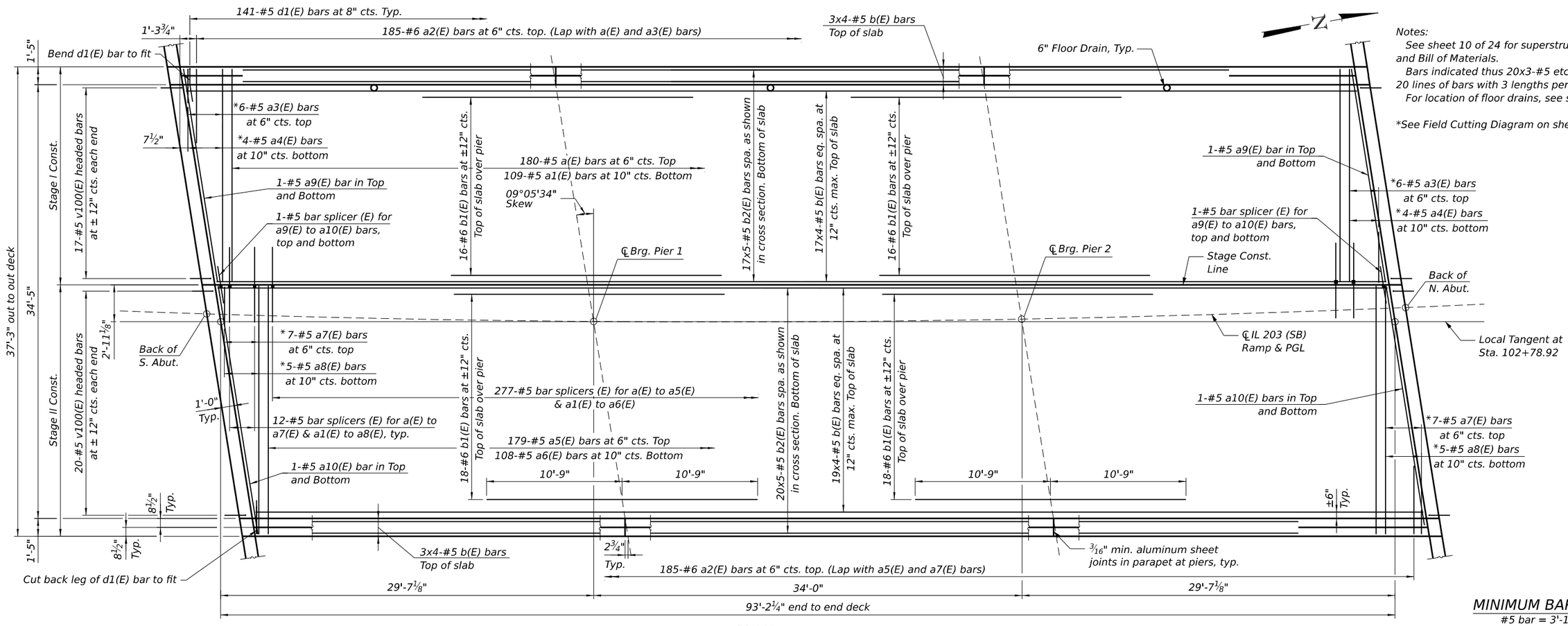

PLAN

Notes:
See sheet 10 of 24 for superstructure details and Bill of Materials.
Bars indicated thus 20x3-#5 etc. indicates 20 lines of bars with 3 lengths per line.
For location of floor drains, see sheet 1 of 24.

*See Field Cutting Diagram on sheet 10 of 24.

MINIMUM BAR LAP
#5 bar = 3'-10"

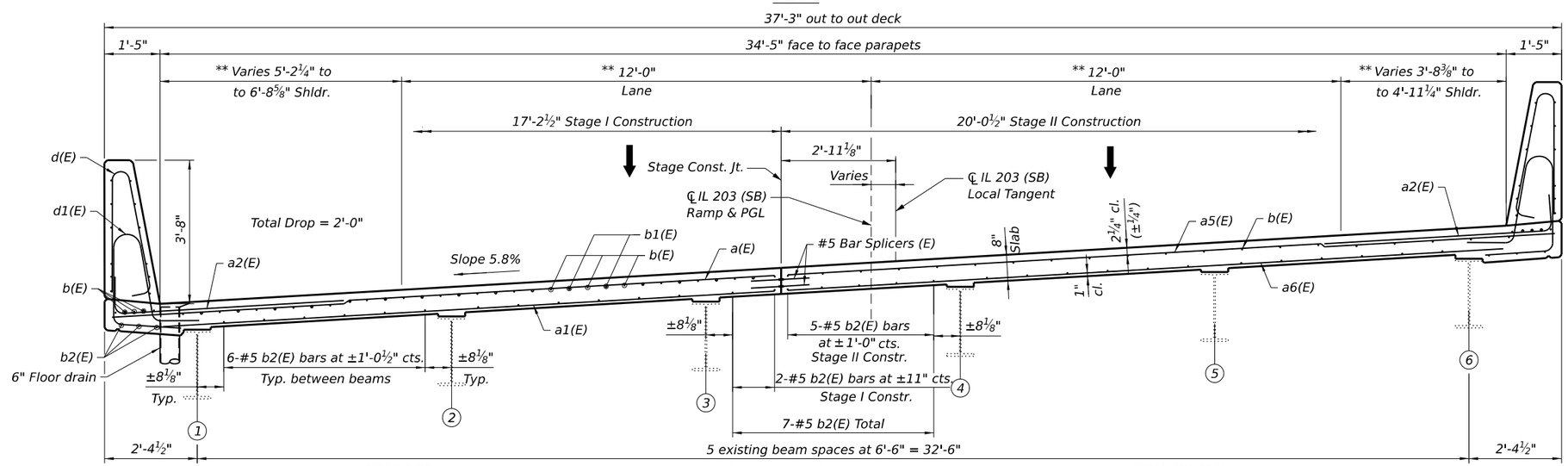

CROSS SECTION
(Looking North)

** Indicates dimension is radial to ℄.

MODEL: $MODELNAME$
FILE NAME: D876E84-009-0022-SUPERSTRU.dgn

Jacobs
525 West Monroe
Suite 1600
Chicago, IL 60661
(312) 251-3000

USER NAME = jacobspw18lcs09$	DESIGNED - CJF	REVISED -	
	DRAWN - EAK	REVISED -	
PLOT SCALE = 0.16666667 ' / in.	CHECKED - ED	REVISED -	
PLOT DATE = 12/9/2025	DATE - 2025/10/03	REVISED -	

STATE OF ILLINOIS
DEPARTMENT OF TRANSPORTATION

SUPERSTRUCTURE
STRUCTURE NO. 082–0022

SCALE: NTS | SHEET 9 OF 24 SHEETS | STA. | TO STA.

F.A.I. RTE.	SECTION	COUNTY	TOTAL SHEETS	SHEET NO.
70	Section82-(5,6)RS-2, 60-6RS-2	MADISON & ST. CLAIR	678	419
		CONTRACT NO. 76E84		
		ILLINOIS	FED. AID PROJECT	

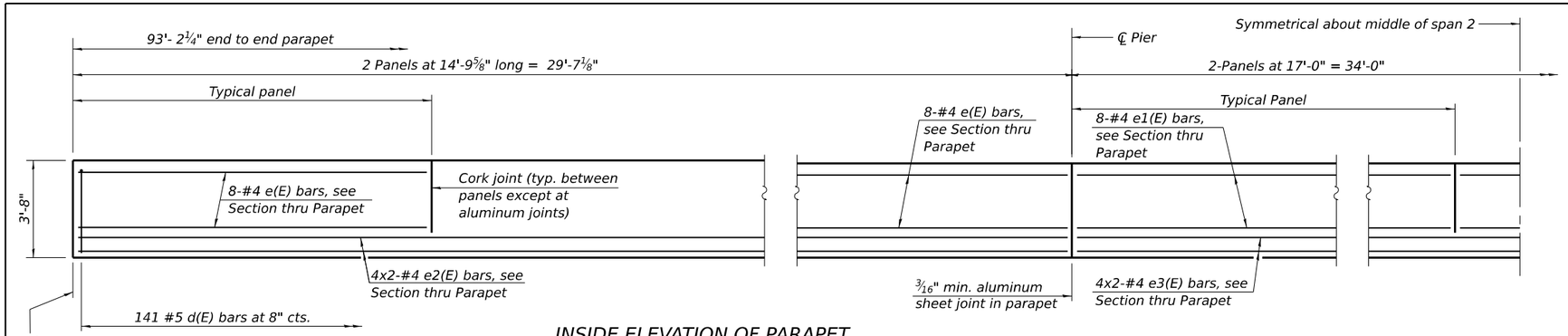

INSIDE ELEVATION OF PARAPET

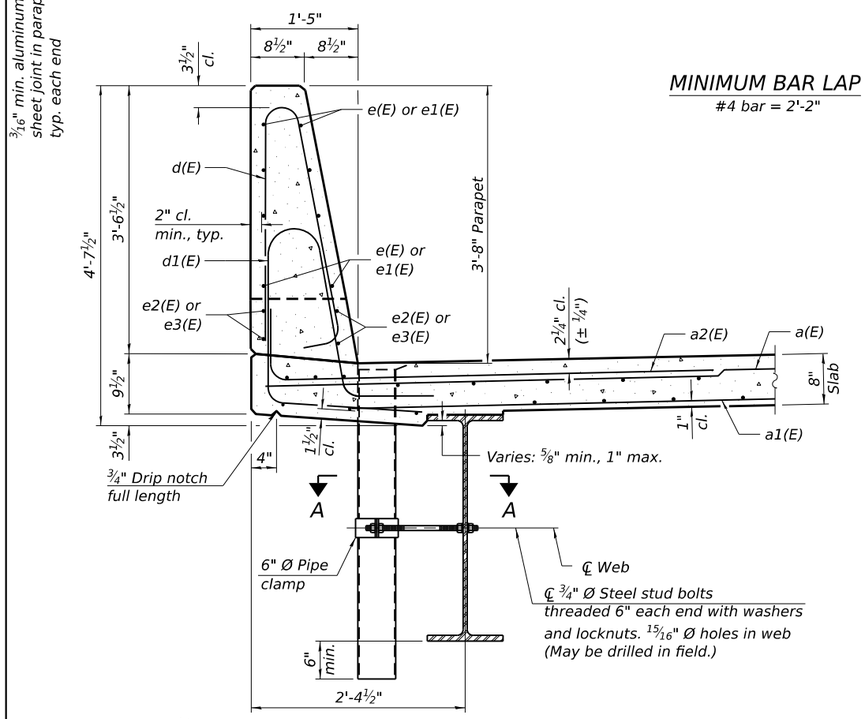

MINIMUM BAR LAP

#4 bar = 2'-2"

SECTION THRU PARAPET

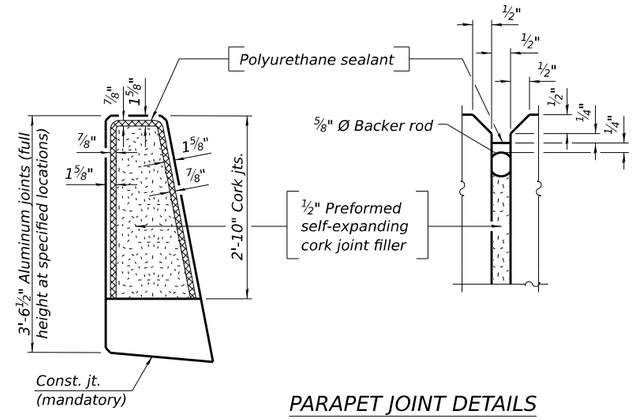

PARAPET JOINT DETAILS

Notes:

Fiberglass pipe shall conform to ASTM D2996, with short-time rupture strength hoop tensile stress of 30,000 p.s.i. minimum.

The exterior surfaces of the floor drains shall be painted according to Article 506 with the finish coat as specified. The exterior surfaces of the drains shall be cleaned according to the Society of Protective Coating's Spec. SSPC-SP1 prior to painting.

The top portion of aluminum floor drains shall be coated with 5 mils of either bitumen paint or epoxy paint to minimize reaction with wet concrete.

The clamping device shall be galvanized according to AASHTO M 232. Cost of clamping device included with Floor Drains.

The 3/16" min. aluminum sheet shall be ASTM B 209 alloy 3003-H14 and coated with 5 mils of either bitumen paint or epoxy paint to minimize reaction with wet concrete. Cost included with Concrete Superstructure.

The polyurethane sealant shall be according to Article 1050.04 of the Std. Spec. and the color shall be gray.

Bar terminators paid for separately. See Total Bill of Material.

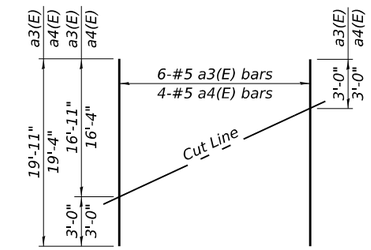

FIELD CUTTING DIAGRAM

Order a3(E) and a4(E) bars full length. Cut as shown and use remainder of bars in opposite end of deck.

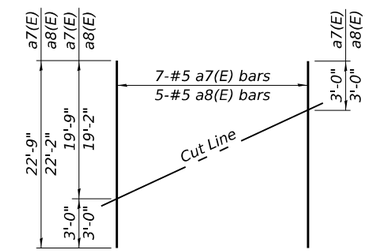

FIELD CUTTING DIAGRAM

Order a7(E) and a8(E) bars full length. Cut as shown and use remainder of bars in opposite end of deck.

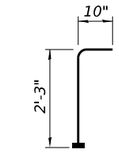

BAR v100(E)

(Headed. 74-#5 Bar terminators)

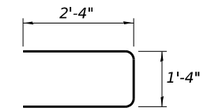

BAR s10(E)

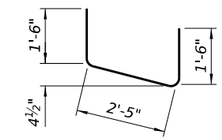

BAR u(E)

SUPERSTRUCTURE BILL OF MATERIAL

Bar	No.	Size	Length	Shape
a(E)	180	#5	16'-11"	
a1(E)	109	#5	16'-4"	
a2(E)	370	#6	8'-4"	
a3(E)	6	#5	19'-11"	
a4(E)	4	#5	19'-4"	
a5(E)	179	#5	19'-9"	
a6(E)	108	#5	19'-2"	
a7(E)	7	#5	22'-9"	
a8(E)	5	#5	22'-2"	
a9(E)	4	#5	17'-2"	
a10(E)	4	#5	20'-0"	
b(E)	168	#5	26'-2"	
b1(E)	68	#6	21'-6"	
b2(E)	185	#5	21'-8"	
d(E)	282	#5	7'-0"	
d1(E)	282	#5	8'-0"	
e(E)	64	#4	14'-6"	
e1(E)	32	#4	16'-8"	
e2(E)	32	#4	16'-0"	
e3(E)	16	#4	18'-2"	
m10(E)	6	#6	17'-1"	
m11(E)	20	#6	6'-4"	
m12(E)	8	#6	2'-2"	
m13(E)	6	#6	20'-1"	
s10(E)	58	#5	6'-0"	
s11(E)	58	#5	7'-8"	
u(E)	8	#6	5'-5"	
v100(E)	74	#5	3'-1"	
Reinforcement Bars, Epoxy Coated			Lbs.	34,720
Concrete Superstructure			Cu. Yds.	139.0

Bars indicated thus 1 x 2-#4 etc. indicates 1 line of bars with 2 lengths per line.

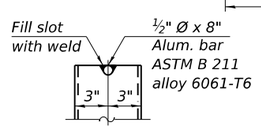

ALUMINUM TUBE

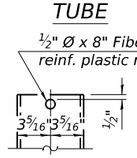

FIBERGLASS PIPE

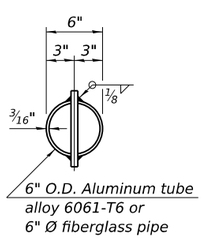

TOP PLAN

(Showing aluminum tube)

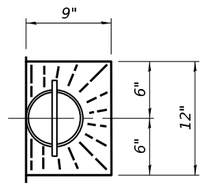

TOP PLAN

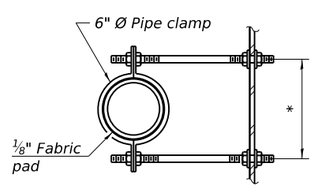

SECTION A-A

*Dimension as required by pipe clamp

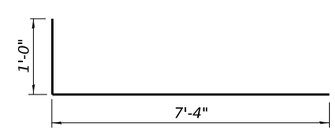

BAR a2(E)

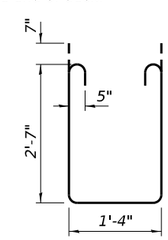

BAR s11(E)

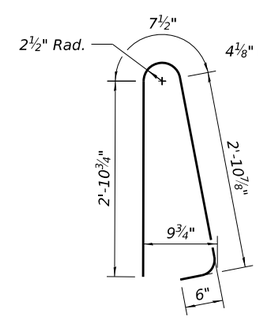

BAR d(E)

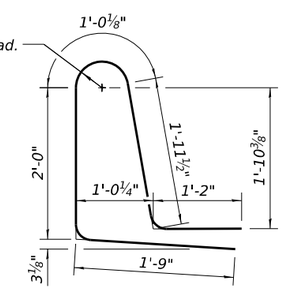

BAR d1(E)

MODEL: $MODELNAMES
FILE NAME: D876E84-010-0022-SUPERSTRU DET.dgn

Jacobs
525 West Monroe
Suite 1600
Chicago, IL 60661
(312) 251-3000

USER NAME = jacobspw18ics09$	DESIGNED - CJF	REVISED -	
	DRAWN - EAK	REVISED -	
PLOT SCALE = 0.16666667 ' / in.	CHECKED - ED	REVISED -	
PLOT DATE = 12/4/2025	DATE - 2025/10/03	REVISED -	

STATE OF ILLINOIS
DEPARTMENT OF TRANSPORTATION

SUPERSTRUCTURE DETAILS
STRUCTURE NO. 082-0022

SCALE: NTS | SHEET 10 OF 24 SHEETS | STA. | TO STA.

F.A.I. RTE.	SECTION	COUNTY	TOTAL SHEETS	SHEET NO.
70	Section82-(5,6)RS-2, 60-6RS-2	MADISON & ST. CLAIR	678	420
		CONTRACT NO. 76E84		
		ILLINOIS FED. AID PROJECT		

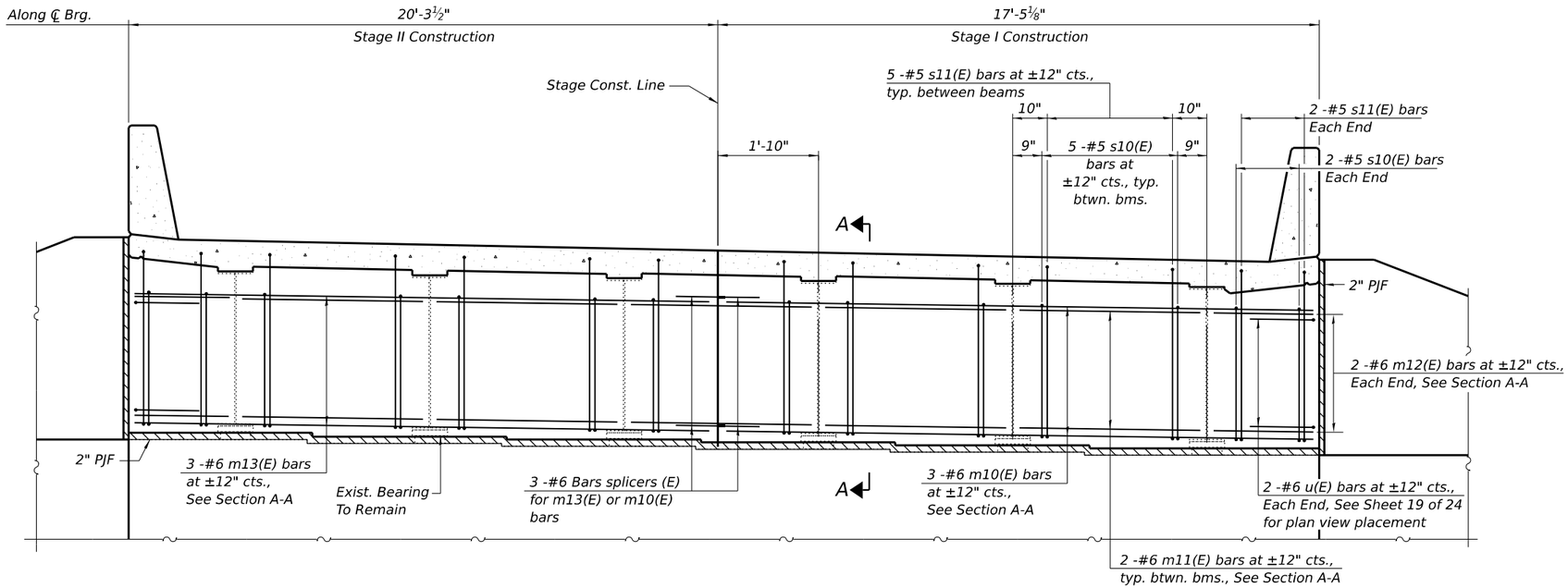

DIAPHRAGM AT SOUTH ABUTMENT

(Looking South)

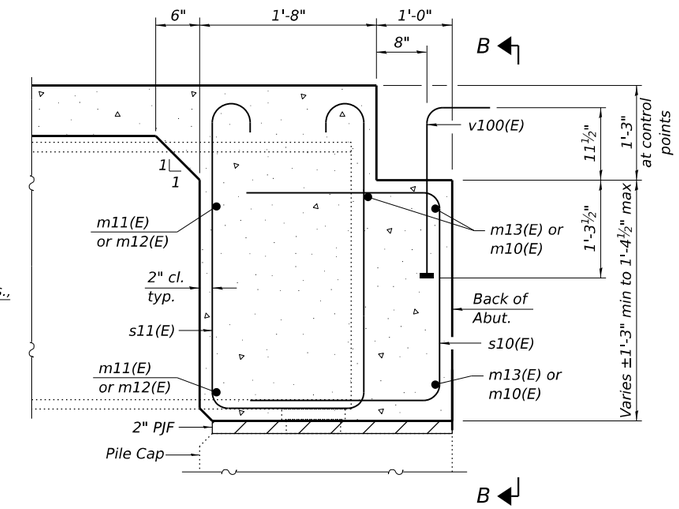

SECTION A-A

(at Rt. ∠'s)

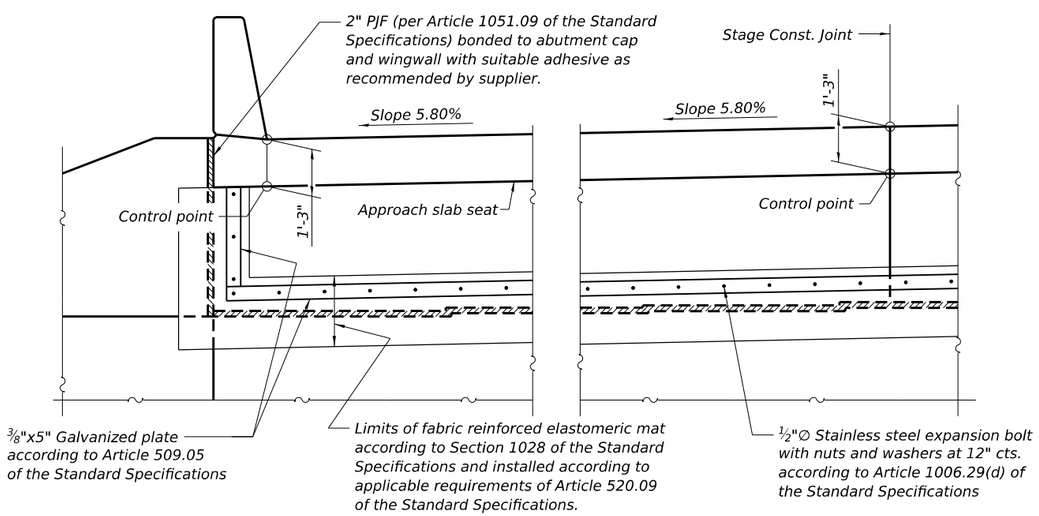

VIEW B-B

Notes:

Cost of fabric reinforced elastomeric mat, galvanized plate, stainless steel expansion bolts with nuts and washers and installation are included in the cost of Concrete Superstructure.

All spalls of pile cap corners that may have occurred prior to or during concrete removal shall be repaired by the direction of the engineer prior to placing the 2" PJF on the pile cap.

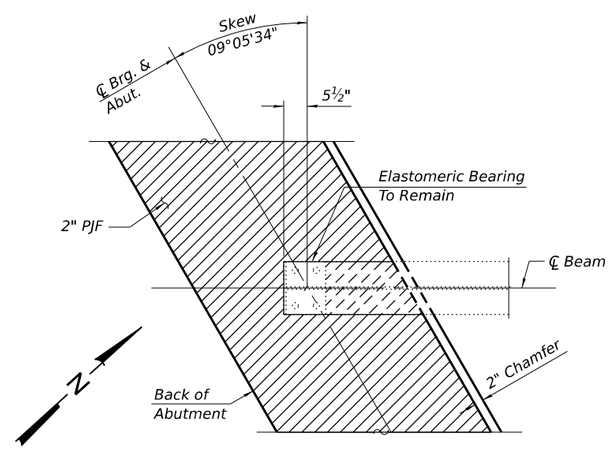

TYPICAL PILE CAP PLAN

(Showing bottom flange of beam, Bearing & PJF)

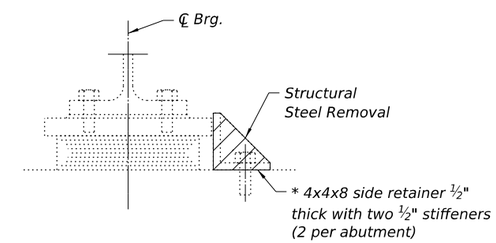

SOUTH BEARING DETAIL

Notes:

For additional structural steel removal details and quantities, see sheet 15 of 24.

* Side retainers at both abutments shall be removed. The anchor bolts shall be cut flush with the top of abutment cap. (Cost of cutting anchor bolts included with structural steel removal.)

BILL OF MATERIAL

ITEM	UNIT	TOTAL
Structural Steel Removal	Pound	20

Notes:

See sheet 10 of 24 for superstructure details and Bill of Material.

The s10(E) and s11(E) bars shall be placed parallel to the beams. Spacing for these bars shall be at right angles to the beams.

The approach slab seat shall have a constant slope determined from the control points shown.

MODEL: $MODELNAMES
FILE NAME: D876E84-011-0022-DIAPH SOUTH.dgn

Jacobs
525 West Monroe
Suite 1600
Chicago, IL 60661
(312) 251-3000

USER NAME = jacobspw18lcs10$	DESIGNED - CJF	REVISED -	
	DRAWN - EAK	REVISED -	
PLOT SCALE = 0.16666667 ' / in.	CHECKED - ED	REVISED -	
PLOT DATE = 12/4/2025	DATE - 2025/10/03	REVISED -	

STATE OF ILLINOIS
DEPARTMENT OF TRANSPORTATION

SOUTH DIAPHRAGM DETAILS
STRUCTURE NO. 082-0022

SCALE: NTS | SHEET 11 OF 24 SHEETS | STA. | TO STA.

F.A.I. RTE.	SECTION	COUNTY	TOTAL SHEETS	SHEET NO.
70	Section82-(5,6)RS-2, 60-6RS-2	MADISON & ST. CLAIR	678	421
		CONTRACT NO. 76E84		
		ILLINOIS	FED. AID PROJECT	

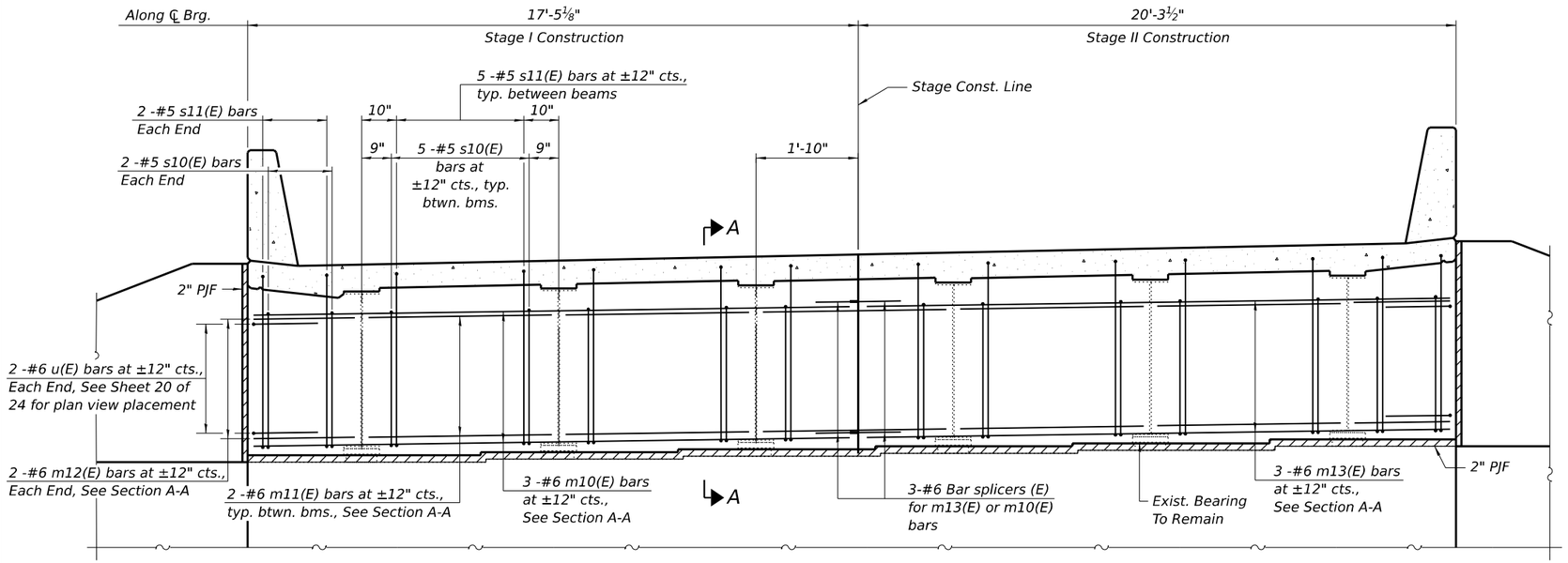

DIAPHRAGM AT NORTH ABUTMENT

(Looking North)

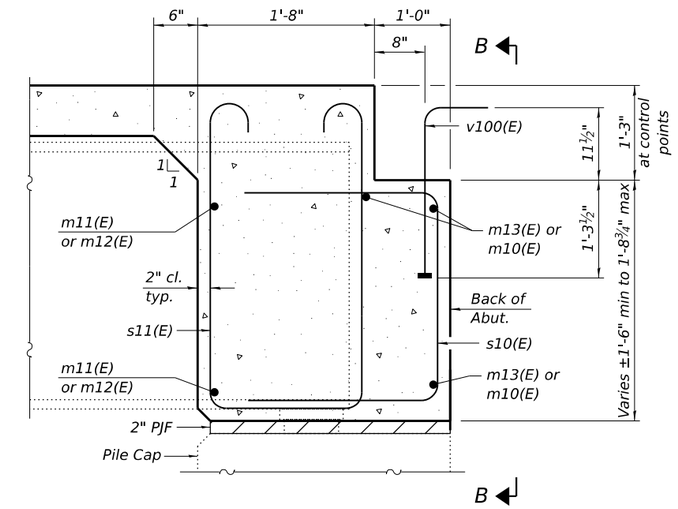

SECTION A-A

(at Rt. ∠'s)

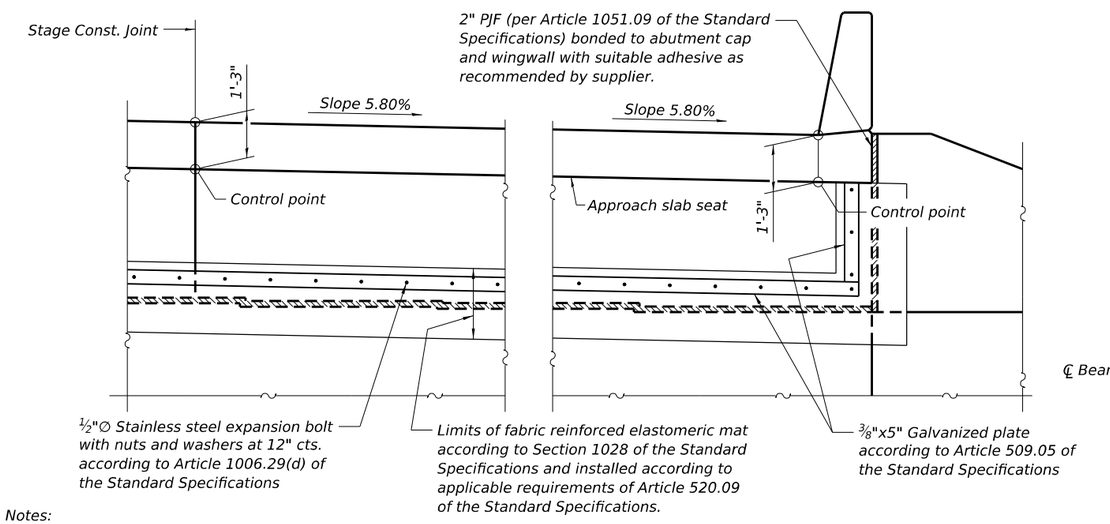

VIEW B-B

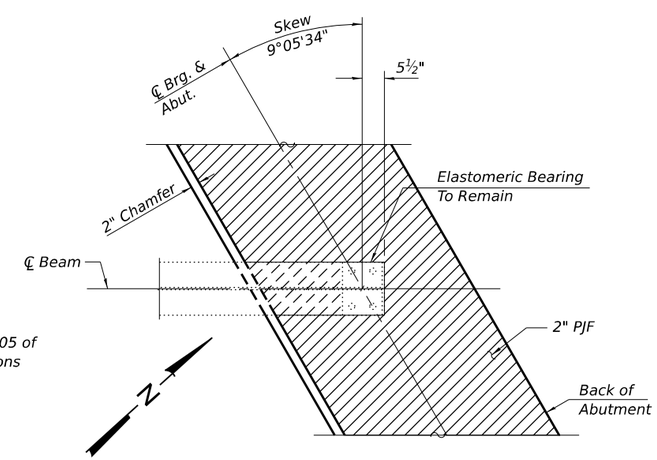

TYPICAL PILE CAP PLAN

(Showing bottom flange of beam, Bearing & PJF)

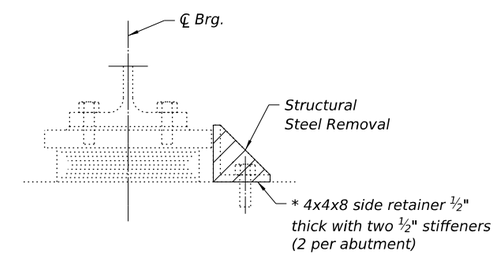

NORTH BEARING DETAIL

Note:
For additional structural steel removal details and quantities, see sheet 15 of 24.

* Side retainers at both abutments shall be removed. The anchor bolts shall be cut flush with the top of abutment cap. (Cost of cutting anchor bolts included with structural steel removal.)

BILL OF MATERIAL

ITEM	UNIT	TOTAL
Structural Steel Removal	Pound	20

Notes:
Cost of fabric reinforced elastomeric mat, galvanized plate, stainless steel expansion bolts with nuts and washers and installation are included in the cost of Concrete Superstructure.
All spalls of pile cap corners that may have occurred prior to or during concrete removal shall be repaired by the direction of the engineer prior to placing the 2" PJF on the pile cap.

Notes:
See sheet 10 of 24 for superstructure details and Bill of Material.
The s10(E) and s11(E) bars shall be placed parallel to the beams. Spacing for these bars shall be at right angles to the beams.
The approach slab seat shall have a constant slope determined from the control points shown.

MODEL: $MODELNAMES
FILE NAME: D876E84-0112-0022-DIAPH NORTH.dgn

Jacobs
525 West Monroe
Suite 1600
Chicago, IL 60661
(312) 251-3000

USER NAME = jacobspw18lcs09$	DESIGNED - CJF	REVISED -	
	DRAWN - EAK	REVISED -	
PLOT SCALE = 0.16666667 ' / in.	CHECKED - ED	REVISED -	
PLOT DATE = 12/4/2025	DATE - 2025/10/03	REVISED -	

STATE OF ILLINOIS
DEPARTMENT OF TRANSPORTATION

NORTH DIAPHRAGM DETAILS
STRUCTURE NO. 082-0022

SCALE: NTS | SHEET 12 OF 24 SHEETS | STA. | TO STA.

F.A.I. RTE.	SECTION	COUNTY	TOTAL SHEETS	SHEET NO.
70	Section82-(5,6)RS-2, 60-6RS-2	MADISON & ST. CLAIR	678	422
		CONTRACT NO. 76E84		
		ILLINOIS	FED. AID PROJECT	

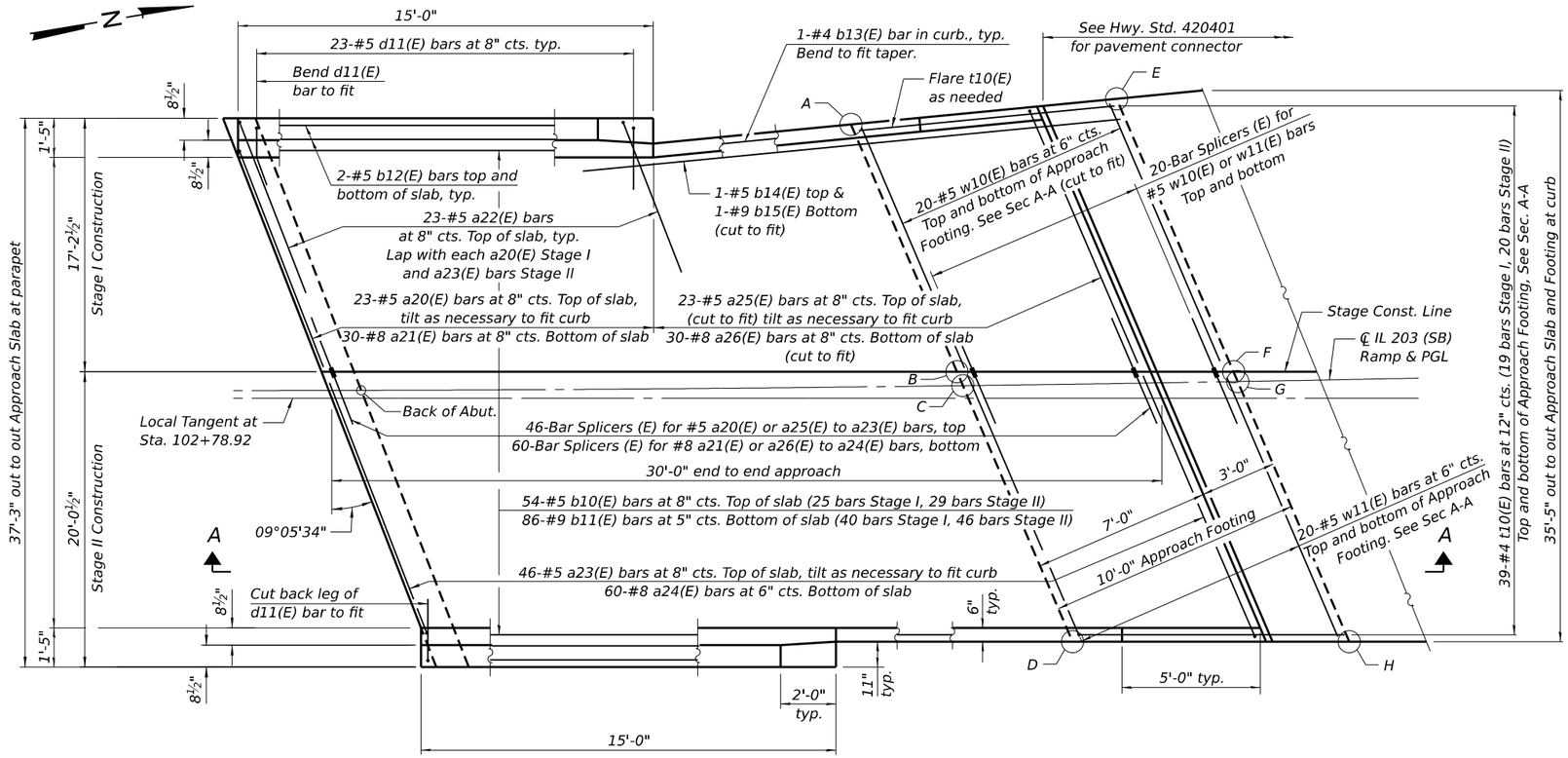

PLAN

(N. approach slab shown; S. approach slab similar)

Note:
For section A-A, see sheet 14 of 24.

TOP AND BOTTOM ELEVATIONS FOR APPROACH FOOTING

South Approach			North Approach		
Point/ Location	Top	Bottom	Point/ Location	Top	Bottom
A	412.01	411.18	A	411.99	411.15
B	412.98	412.15	B	412.96	412.13
C	413.05	412.21	C	413.02	412.18
D	414.08	413.25	D	414.07	413.24
E	412.00	411.17	E	411.98	411.15
F	413.01	412.17	F	412.98	412.15
G	413.04	412.21	G	413.00	412.17
H	414.11	413.27	H	414.09	413.26

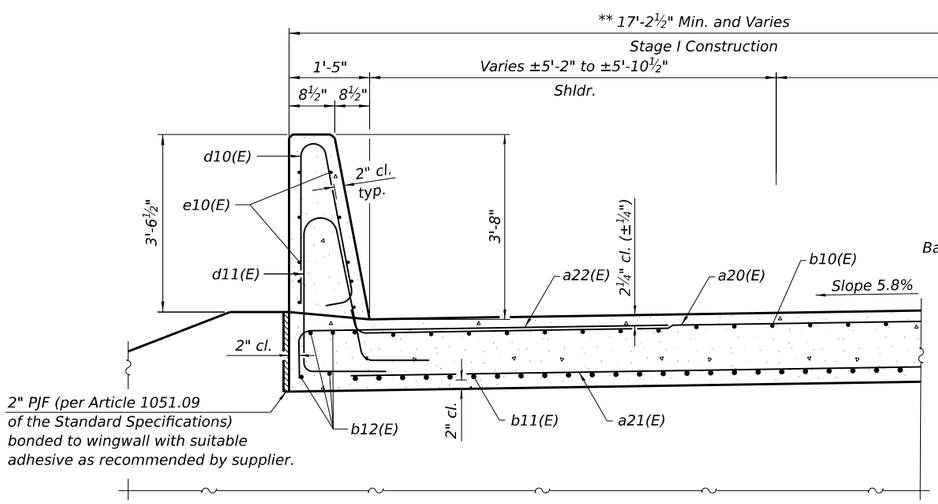

NEAR ABUTMENT

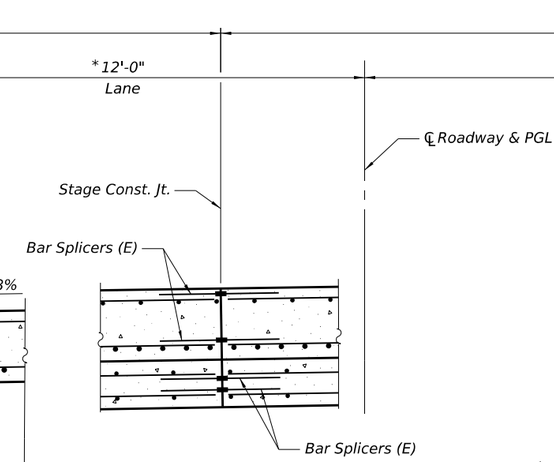

CROSS SECTION

(Looking North)

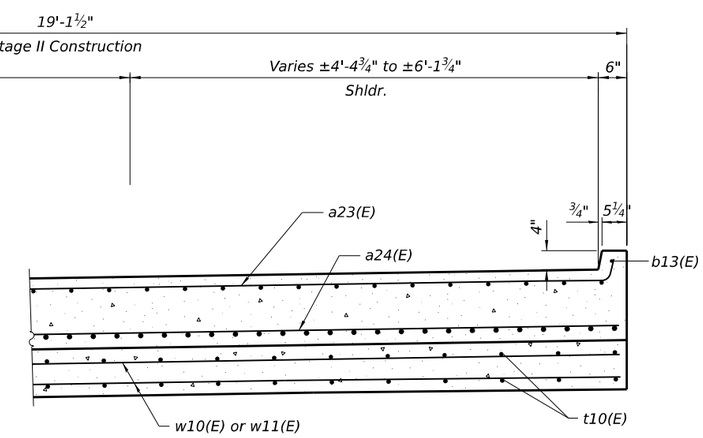

AT APPROACH FOOTING

* Indicates dimension is radial to ℄

** See Plan View and Sheet 8 of 28 Top of Approach Slab Elevations.

MODEL: $MODELNAMES
FILE NAME: D876E84-013-0022-APP SLAB LAYOUT.dgn

Jacobs
525 West Monroe
Suite 1600
Chicago, IL 60661
(312) 251-3000

USER NAME = jacobspw18lcs11$	DESIGNED - CJF	REVISED -	
	DRAWN - EAK	REVISED -	
PLOT SCALE = 0.16666667 ' / in.	CHECKED - ED	REVISED -	
PLOT DATE = 12/4/2025	DATE - 2025/10/03	REVISED -	

STATE OF ILLINOIS
DEPARTMENT OF TRANSPORTATION

BRIDGE APPROACH SLAB, SPECIAL
STRUCTURE NO. 082-0022

SCALE: NTS | SHEET 13 OF 24 SHEETS | STA. | TO STA.

F.A.I. RTE.	SECTION	COUNTY	TOTAL SHEETS	SHEET NO.
70	Section82-(5,6)RS-2, 60-6RS-2	MADISON & ST. CLAIR	678	423

CONTRACT NO. 76E84

ILLINOIS | FED. AID PROJECT

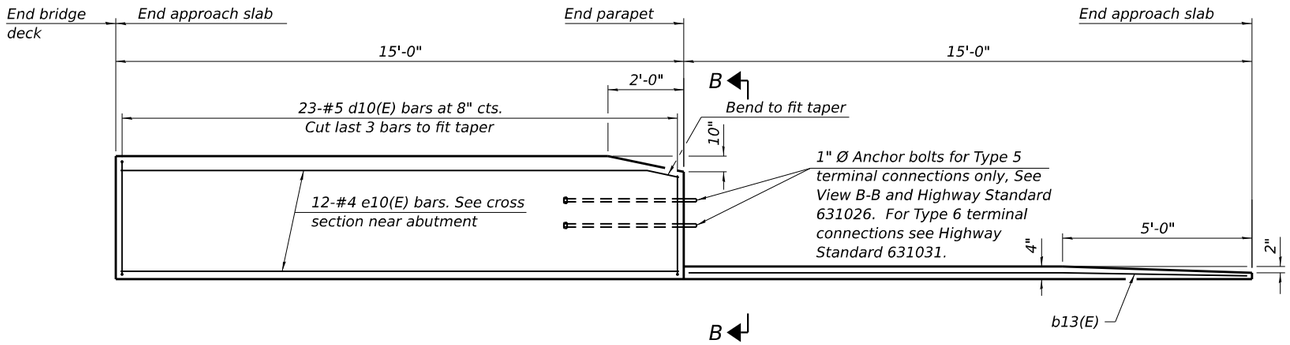

INSIDE ELEVATION OF PARAPET AND CURB

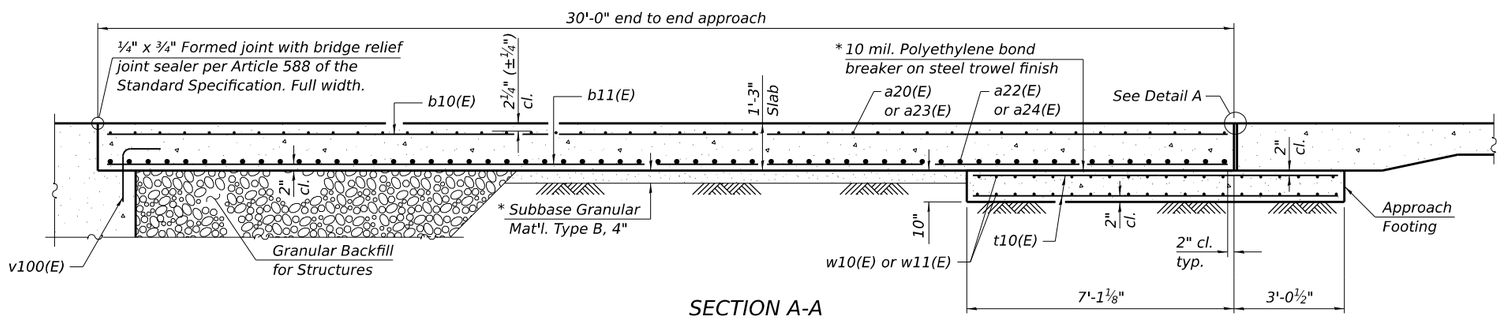

SECTION A-A

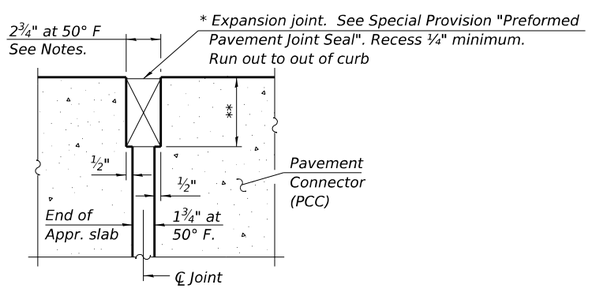

DETAIL A

(at Rt. ∠'s)

* Cost included with Concrete Superstructure (Approach Slab).

** Per manufacturer recommendations

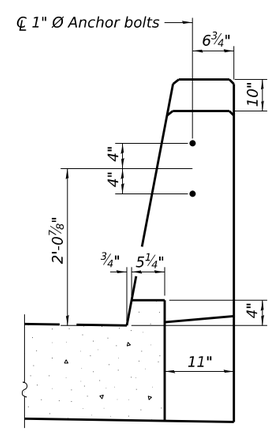

VIEW B-B

Notes:

The joint opening shall be adjusted for temperature per Article 520.04 of the Standard Specifications. However, since this detail is for jointless structures, the length of bridge used to calculate the adjustment shall be equal to half the total bridge length plus the length of the bridge approach slab.

Parapet concrete shall be paid for as Concrete Superstructure.

Approach slab shall be paid for as Concrete Superstructure (Approach Slab), Special.

Approach footing concrete shall be paid for as Concrete Structures.

The approach footing maximum applied service bearing pressure (Qmax) = 2.0 ksf.

Cost of excavation for approach footing included with Concrete Structures.

For Granular Backfill for Structures and drainage treatment details, see sheet 2 of 24.

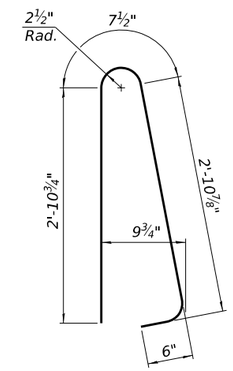

BAR d10(E)

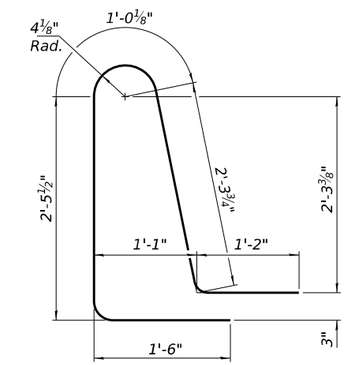

BAR d11(E)

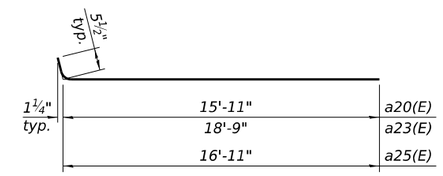

BAR a20(E), a23(E) & a25(E)

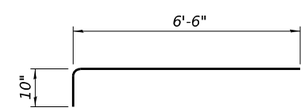

BAR a22(E)

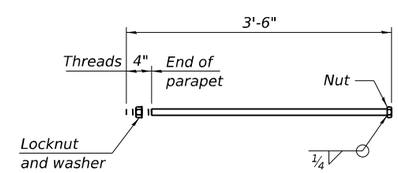

*1" Ø ANCHOR BOLT

(Anchor bolt assemblies shall be galvanized according to Article 1006.09 of the Standard Specifications)

TWO APPROACHES BILL OF MATERIAL

Bar	No.	Size	Length	Shape
a20(E)	46	#5	16'-5"	
a21(E)	60	#8	16'-2"	
a22(E)	92	#5	7'-4"	
a23(E)	92	#5	19'-3"	
a24(E)	120	#8	19'-1"	
a25(E)	46	#5	17'-5"	
a26(E)	60	#8	17-2"	
b10(E)	108	#5	29'-8"	
b11(E)	172	#9	29'-8"	
b12(E)	16	#5	14'-8"	
b13(E)	4	#4	14'-8"	
b14(E)	2	#5	16'-0"	
b15(E)	2	#9	16'-0"	
d10(E)	92	#5	7'-0"	
d11(E)	92	#5	8'-6"	
e10(E)	48	#4	14'-8"	
t10(E)	156	#4	9'-9"	
w10(E)	80	#5	17'-3"	
w11(E)	80	#5	19'-1"	
Concrete Superstructure			Cu. Yd.	8.4
Concrete Superstructure (Approach Slab), Special			Cu. Yd.	100.9
Concrete Structures			Cu. Yd.	22.2
Reinforcement Bars, Epoxy Coated			Pound	42,760

MODEL: $MODELNAMES
FILE NAME: D876E84-014-0022-APP SLAB DET.dgn

Jacobs
525 West Monroe
Suite 1600
Chicago, IL 60661
(312) 251-3000

USER NAME = jacobspw18lcs09$	DESIGNED - CJF	REVISED -	
	DRAWN - EAK	REVISED -	
PLOT SCALE = 0.16666667 ' / in.	CHECKED - ED	REVISED -	
PLOT DATE = 12/4/2025	DATE - 2025/10/03	REVISED -	

STATE OF ILLINOIS
DEPARTMENT OF TRANSPORTATION

BRIDGE APPROACH SLAB, SPECIAL
STRUCTURE NO. 082-0022

SCALE: NTS | SHEET 14 OF 24 SHEETS | STA. | TO STA.

F.A.I. RTE.	SECTION	COUNTY	TOTAL SHEETS	SHEET NO.
70	Section82-(5,6)RS-2, 60-6RS-2	MADISON & ST. CLAIR	678	424

CONTRACT NO. 76E84

ILLINOIS | FED. AID PROJECT

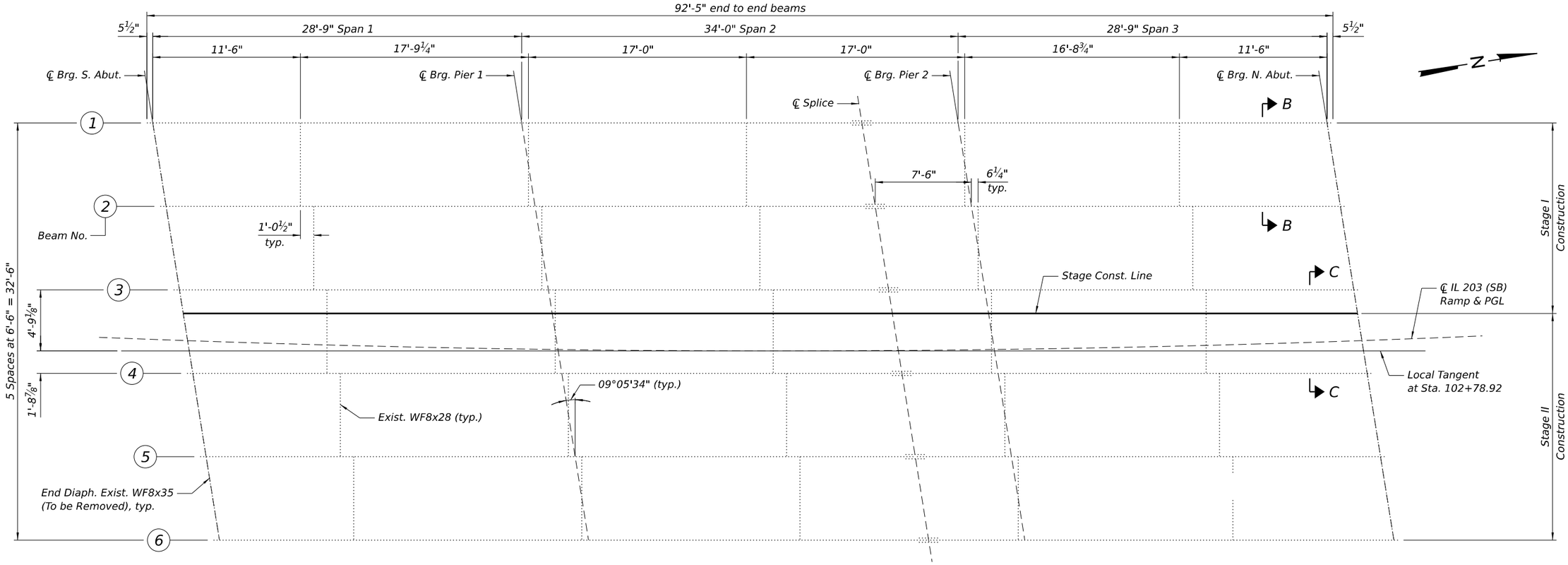

FRAMING PLAN

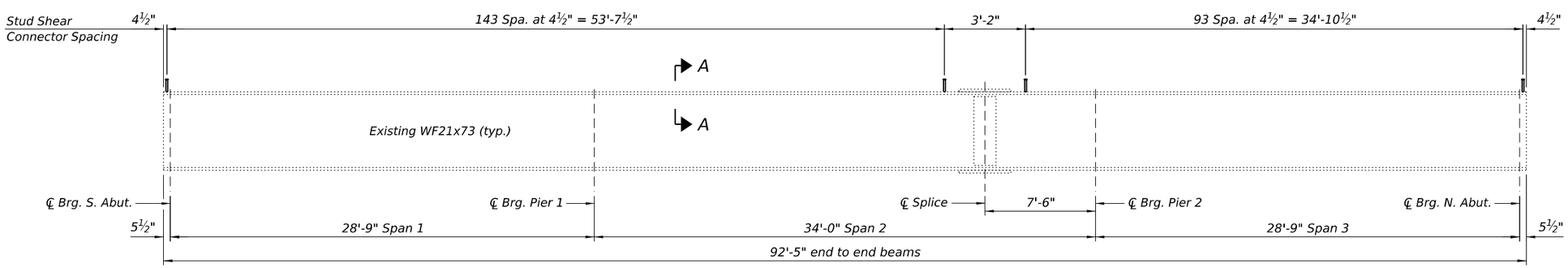

BEAM ELEVATION

BILL OF MATERIAL

ITEM	UNIT	TOTAL
Stud Shear Connectors	Each	2,856
Structural Steel Removal	Pound	2,270

Notes:
For Sections A-A, B-B & C-C, see Sheet 16 of 24.
Section C-C provides a stage construction condition of end diaphragms.

MODEL: $MODELNAMES
FILE NAME: D876E84-015-0022-STRUCT STEEL.dgn

Jacobs
525 West Monroe
Suite 1600
Chicago, IL 60661
(312) 251-3000

USER NAME = jacobspw18lcs10$	DESIGNED - CJF	REVISED -	
	DRAWN - EAK	REVISED -	
PLOT SCALE = 0.16666667 ' / in.	CHECKED - ED	REVISED -	
PLOT DATE = 12/4/2025	DATE - 2025/10/03	REVISED -	

STATE OF ILLINOIS
DEPARTMENT OF TRANSPORTATION

STRUCTURAL STEEL
STRUCTURE NO. 082-0022

SCALE: NTS | SHEET 15 OF 24 SHEETS | STA. | TO STA.

F.A.I. RTE.	SECTION	COUNTY	TOTAL SHEETS	SHEET NO.
70	Section82-(5,6)RS-2, 60-6RS-2	MADISON & ST. CLAIR	678	425

CONTRACT NO. 76E84
ILLINOIS | FED. AID PROJECT

Symmetrical 3 Span

INTERIOR BEAM MOMENT TABLE				
		0.4 Sp. 1 or 0.6 Sp. 3	Pier	0.5 Sp. 2
I_s	(in⁴)	1,600	1,600	1,600
I_c (n)	(in⁴)	6,745	———	6,745
I_c (3n)	(in⁴)	5,066	———	5,066
I_c (cr)	(in⁴)	———	2,995	———
S_s	(in³)	151	151	151
S_c (n)	(in³)	284	———	284
S_c (3n)	(in³)	255	———	255
S_c (cr)	(in³)	———	208	———
S_x	(in³)	———	———	———
DC1	(k / ')	0.833	0.833	0.833
M_{DC1}	(' k)	46	75	36
DC2	(k / ')	0.190	0.190	0.190
M_{DC2}	(' k)	11	19	9
DW	(k / ')	0.158	0.158	0.158
M_{DW}	(' k)	9	14	7
LLDF		0.609	0.595	0.583
M_{LL+IM}	(' k)	239	193	220
f_ℓ (Strength I)	(ksi)	0	0	0
$M_u + {}^1/_3 f_\ell S_x$	(' k)	505	481	452
$\Phi_f M_n$	(' k)	———	———	———
f_s DC1	(ksi)	3.64	5.95	2.83
f_s DC2	(ksi)	0.47	1.09	0.38
f_s DW	(ksi)	0.38	0.81	0.30
f_s (LL+IM)	(ksi)	10.12	11.11	9.31
f_ℓ (Service II)	(ksi)	0.00	0.00	0.00
$f_s + {}^{f_\ell}/_2$ (Service II)	(ksi)	17.64	22.29	15.61
Service II Resistance	(ksi)	31.35	26.4	31.35
$f_s + {}^{f_\ell}/_3$ (Strength I)	(ksi)	23.42	29.46	20.76
$\Phi_f F_n$	(ksi)	33.00	33.00	33.00
V_f	(k)	39	132	40

INTERIOR BEAM REACTION TABLE			
		Abut.	Pier
		Interior	Interior
LLDF		0.738	0.738
OCF		1.044	1.044
R_{DC1}	(k)	9.1	26.6
R_{DC2}	(k)	2.1	6.6
R_{DW}	(k)	1.6	5.0
R_{LL}	(k)	39.9	63.6
R_{Im}	(k)	11.1	15.2
R_{Total} (Strength I)(Impact)	(k)	105.6	186.9
R_{Total} (Strength I)(No Impact)	(k)	86.1	160.3

I_s , S_s : Non-composite moment of inertia and section modulus of the steel section used for computing f_s (Total-Strength I, and Service II) due to non-composite dead loads (in.⁴ and in.³).

I_c (n), S_c (n): Composite moment of inertia and section modulus of the steel and deck based upon the modular ratio, "n", used for computing f_s (Total-Strength I, and Service II) in uncracked sections due to short-term composite live loads (in.⁴ and in.³).

I_c (3n), S_c (3n): Composite moment of inertia and section modulus of the steel and deck based upon 3 times the modular ratio, "3n", used for computing f_s (Total-Strength I, and Service II) in uncracked sections, due to long-term composite (superimposed) dead loads (in.⁴ and in.³).

I_c (cr), S_c (cr): Composite moment of inertia and section modulus of the steel and longitudinal deck reinforcement, used for computing f_s (Total-Strength I and Service II) in cracked sections, due to both short-term composite live loads and long-term composite (superimposed) dead loads (in.⁴ and in.³).

S_x : Section modulus about the major axis of a section to the controlling flange, tension or compression, taken as yield moment with respect to the controlling flange over the yield strength of the controlling flange (in.³).

DC1: Un-factored non-composite dead load (kips/ft.).

M_{DC1}: Un-factored moment due to non-composite dead load (kip-ft.).

DC2: Un-factored long-term composite (superimposed excluding future wearing surface) dead load (kips/ft.).

M_{DC2}: Un-factored moment due to long-term composite (superimposed excluding future wearing surface) dead load (kip-ft.).

DW: Un-factored long-term composite (superimposed future wearing surface only) dead load (kips/ft.).

M_{DW} : Un-factored moment due to long-term composite (superimposed future wearing surface only) dead load (kip-ft.).

LLDF: Live Load Distribution Factor for moment and shear computed according to Article 4.6.2.2 and further IDOT provisions.

M_{LL+IM}: Un-factored live load moment plus dynamic load allowance (impact) (kip-ft.).

M_u : Strength I load combination of factored design moments (kip-ft.).
$1.25\ (M_{DC1} + M_{DC2}) + 1.5\ M_{DW} + 1.75\ M_{LL+IM}$

f_ℓ : Factored calculated flange lateral bending stress as calculated using Article 6.10.1.6 and as further simplified by IDOT provisions (ksi).

$\Phi_f M_n$: Factored nominal flexural resistance of the section determined as specified in Article 6.10.7.1 or A6 as applicable (kip-ft.).

f_s DC1: Un-factored stress at edge of flange for controlling steel flange due to vertical non-composite dead loads as calculated below (ksi).
M_{DC1} / S_s

f_s DC2: Un-factored stress at edge of flange for controlling steel flange due to vertical composite dead loads as calculated below (ksi).
M_{DC2} / S_c (3n) or M_{DC2} / S_c (cr) as applicable.

f_s DW: Un-factored stress at edge of flange for controlling steel flange due to vertical composite future wearing surface loads as calculated below (ksi).
M_{DW} / S_c (3n) or M_{DW} / S_c (cr) as applicable.

f_s (LL+ IM): Un-factored stress at edge of flange for controlling steel flange due to vertical composite live load plus impact loads as calculated below (ksi).
M_{LL+IM} / S_c (n) or M_{LL+IM} / S_c (cr) as applicable.

$f_s + f_\ell / 2$ (Service II): Sum of stresses as computed below (ksi).
f_s DC1 + f_s DC2 + f_s DW + 1.3 f_s (LL+ IM) + f_ℓ /2

Service II Resistance: Composite ($0.95R_hF_{yf}$) or noncomposite ($0.80R_hF_{yf}$) stress capacity according to Article 6.10.4.2 (ksi).

$f_s + f_\ell / 3$ (Strength I): Sum of stresses as computed below on non-compact sections (ksi).
1.25 (f_s DC1 + f_s DC2) + 1.5 f_s DW + 1.75 f_s (LL+ IM) + f_ℓ /3

$\Phi_f F_n$: Factored nominal flexural resistance of the section as specified in Article 6.10.7.2 or 6.10.8 as applicable (ksi).

V_f: Maximum factored shear range in span computed according to Article 6.10.10.

OCF: Obtuse Correction Factor according to Article 4.6.2.2.3c or as further simplified by IDOT provisions.

R_{DC1}: Un-factored reaction due to non-composite dead load (kip).

R_{DC2}: Un-factored reaction due to long-term composite (superimposed excluding future wearing surface) dead load (kip).

R_{DW} : Un-factored reaction due to long-term composite (superimposed future wearing surface only) dead load (kip).

R_{LL} : Un-factored live load reaction (kip).

R_{IM} : Un-factored dynamic load allowance (impact) (kip).

R_{Total} (Strength I)(Impact): Strength I load combination of factored design reactions (kip).
$1.25\ (R_{DC1} + R_{DC2}) + 1.5R_{DW} + 1.75\ (R_{LL} + R_{IM})$

R_{Total} (Strength I)(No Impact): Strength I load combination of factored design reactions, not including dynamic load allowance (Impact) (kip).
$1.25\ (R_{DC1} + R_{DC2}) + 1.5R_{DW} + 1.75\ (R_{LL})$

Notes:
M_{LL} and R_{LL} include the effects of centrifugal force and superelevation.
Existing End Diaphragms on stage line are to be temporarily supported with timber block posts.

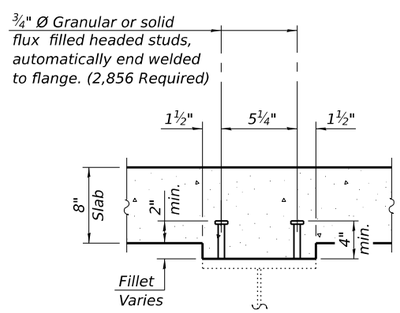

SECTION A-A

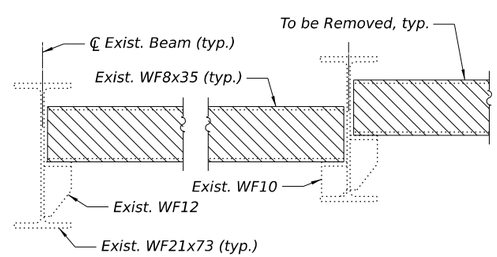

SECTION B-B

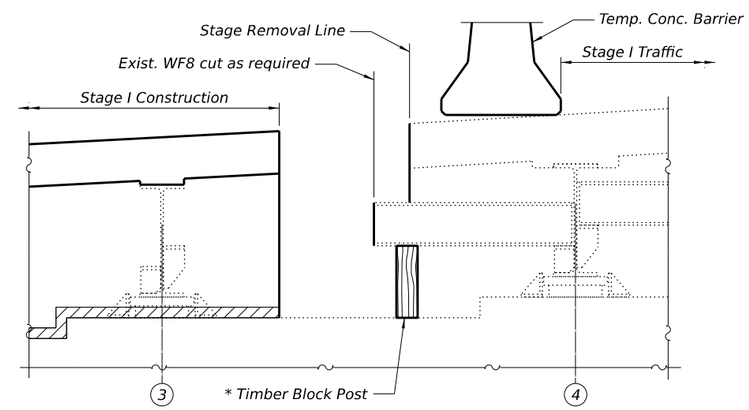

SECTION C-C
STAGED END DIAPHRAGM

* Timber Block Posts shall be installed prior to partial removal of staged end removal. Cost of Timber Block Posts, installation and removal is included with Structural Steel Removal.

MODEL: $MODELNAMES
FILE NAME: D876E84-016-0022-STRUCT STEEL DET.dgn

Jacobs
525 West Monroe
Suite 1600
Chicago, IL 60661
(312) 251-3000

USER NAME = jacobspw18lcs11$	DESIGNED - CJF	REVISED -	
	DRAWN - EAK	REVISED -	
PLOT SCALE = 0.16666667 ' / in.	CHECKED - ED	REVISED -	
PLOT DATE = 12/4/2025	DATE - 2025/10/03	REVISED -	

STATE OF ILLINOIS
DEPARTMENT OF TRANSPORTATION

STRUCTURAL STEEL DETAILS
STRUCTURE NO. 082–0022

SCALE: NTS | SHEET 16 OF 24 SHEETS | STA. | TO STA.

F.A.I. RTE.	SECTION	COUNTY	TOTAL SHEETS	SHEET NO.
70	Section82-(5,6)RS-2, 60-6RS-2	MADISON & ST. CLAIR	678	426
		CONTRACT NO. 76E84		
		ILLINOIS FED. AID PROJECT		

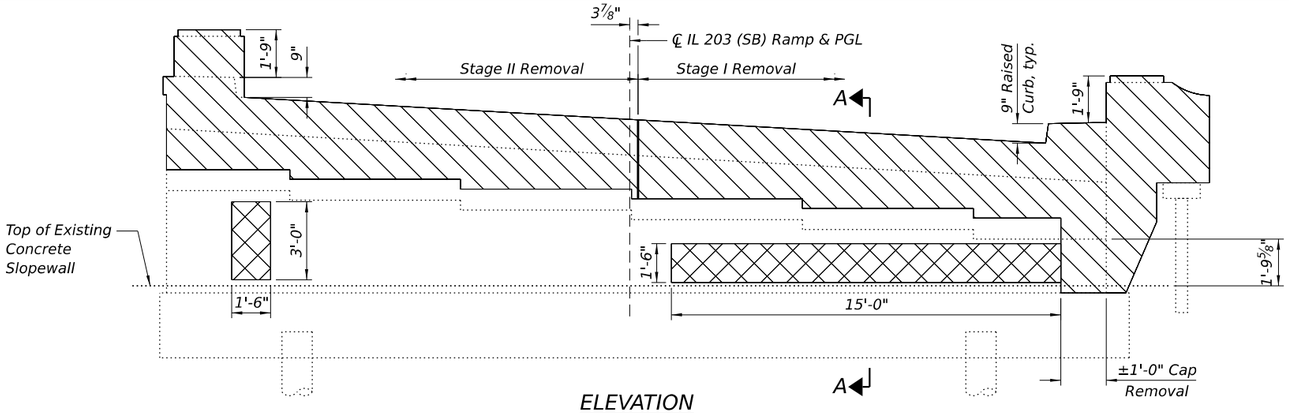

ELEVATION
(Looking South)

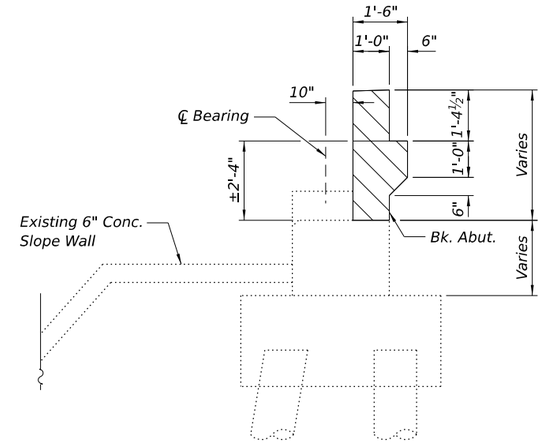

SECTION A-A
(Dimensions in A-A at Rt. L's to Bk. Wall)

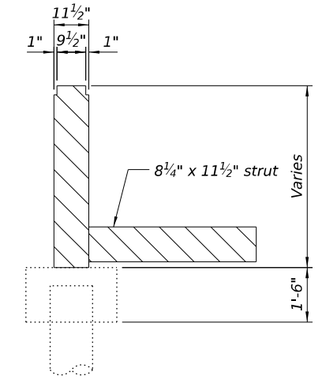

SECTION B-B

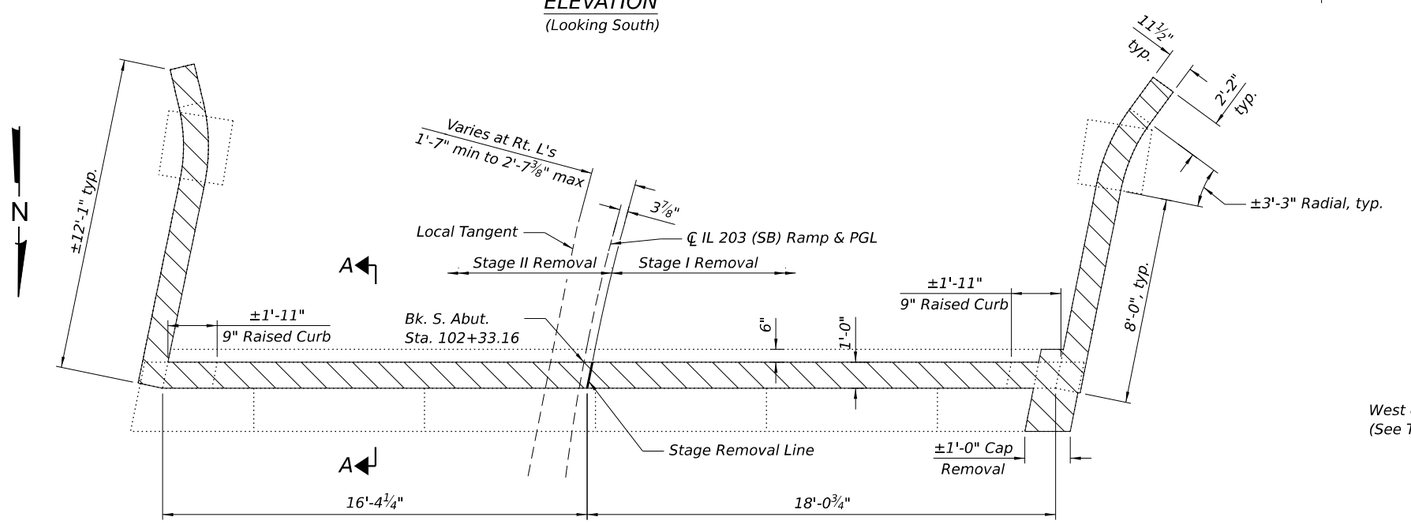

TOP PLAN

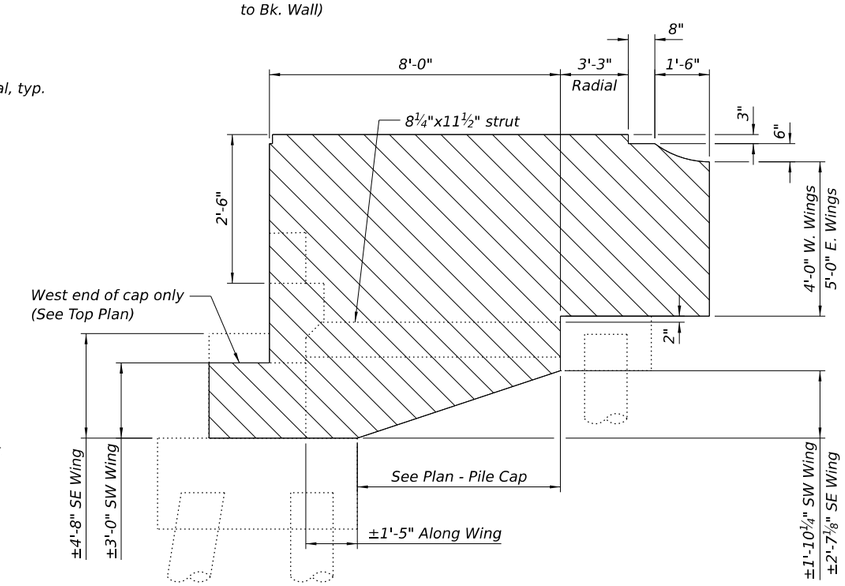

ELEVATION - WINGWALL REMOVAL

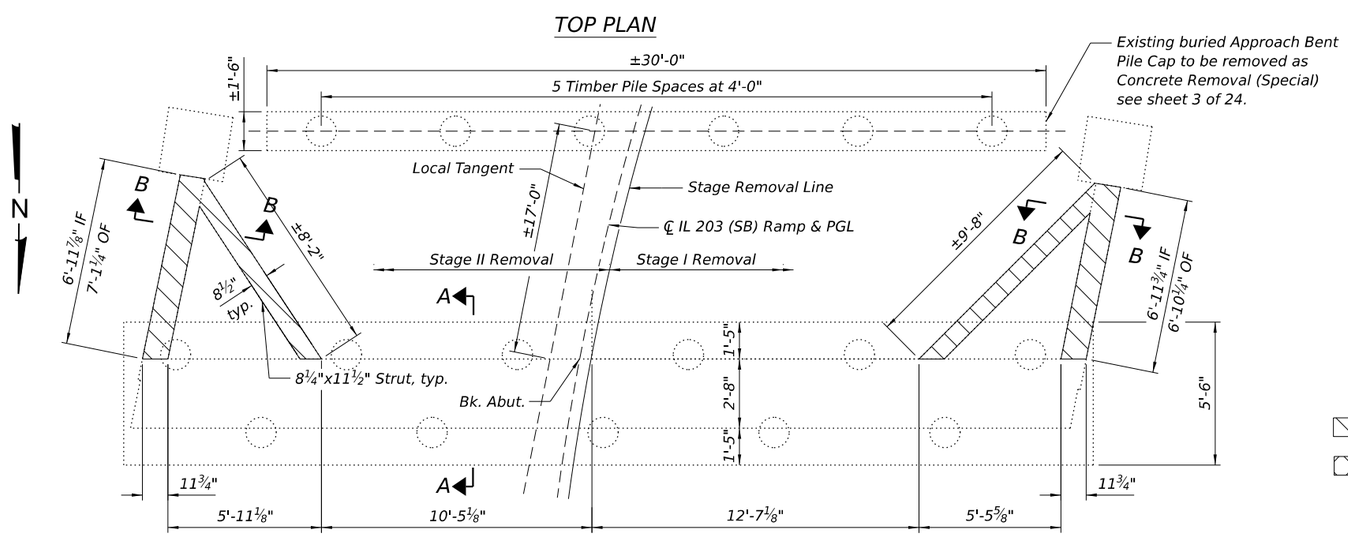

PLAN - PILE CAP

Notes:
Existing reinforcement shall be cleaned, straightened and incorporated into the new construction. Cost included with Concrete Removal.
Any reinforcement bars that are damaged during concrete removal operation shall be repaired or replaced using an approved bar splicer or anchorage system. Cost included with Concrete Removal.
IF indicates inside face.
OF indicates outside face.

Indicates Concrete Removal

Indicates Structural Repair of Concrete (Depth Equal to or Less than 5 inches)

BILL OF MATERIAL

ITEM	UNIT	TOTAL
Concrete Removal	Cu. Yd.	16.6
Concrete Removal (Special)	Cu. Yd.	2.5
Structural Repair of Concrete (Depth Equal to or Less than 5 inches)	Sq. Ft.	27

Jacobs
525 West Monroe
Suite 1600
Chicago, IL 60661
(312) 251-3000

USER NAME = jacobspw18ics09$	DESIGNED - CJF	REVISED -	
	DRAWN - EAK	REVISED -	
PLOT SCALE = 0.16666667 ' / in.	CHECKED - ED	REVISED -	
PLOT DATE = 12/4/2025	DATE - 2025/10/03	REVISED -	

STATE OF ILLINOIS
DEPARTMENT OF TRANSPORTATION

SOUTH ABUTMENT REMOVAL DETAILS
STRUCTURE NO. 082-0022

SCALE: NTS | SHEET 17 OF 24 SHEETS | STA. | TO STA.

F.A.I. RTE.	SECTION	COUNTY	TOTAL SHEETS	SHEET NO.
70	Section82-(5,6)RS-2, 60-6RS-2	MADISON & ST. CLAIR	678	427

CONTRACT NO. 76E84
ILLINOIS | FED. AID PROJECT

MODEL: $MODELNAMES
FILE NAME: D876E84-017-0022-ABUT DEMO SO.dgn

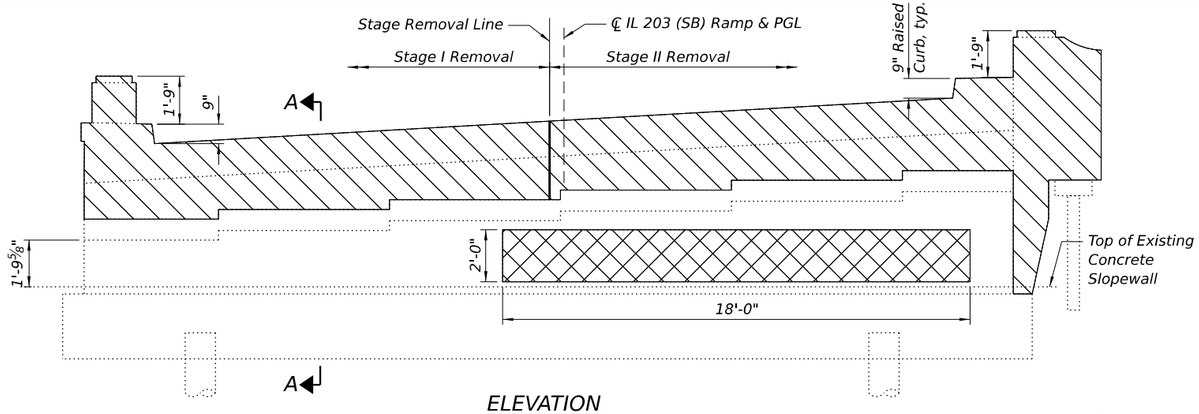

ELEVATION
(Looking North)

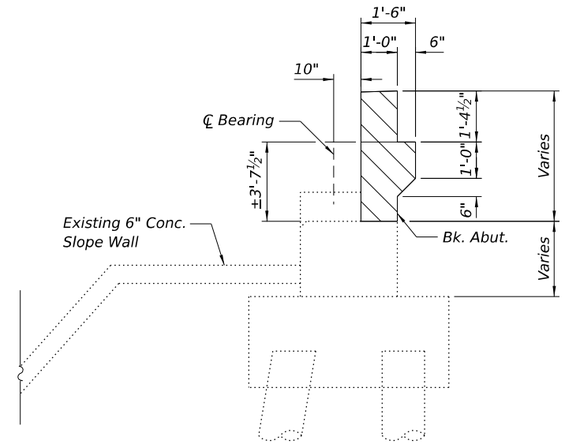

SECTION A-A
(Dimensions in A-A at Rt. L's to Bk. Wall)

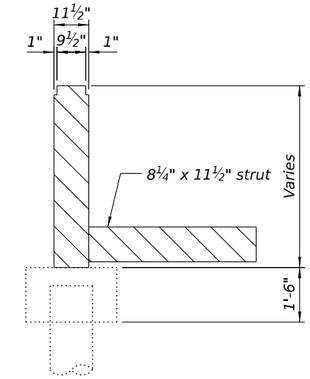

SECTION B-B

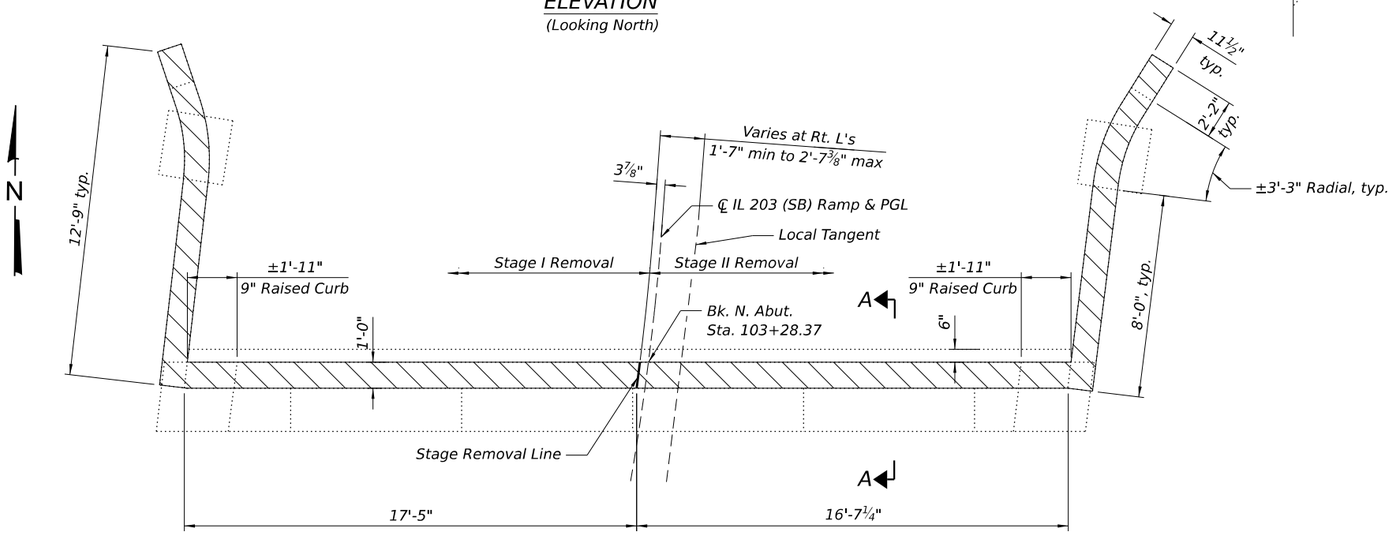

TOP PLAN

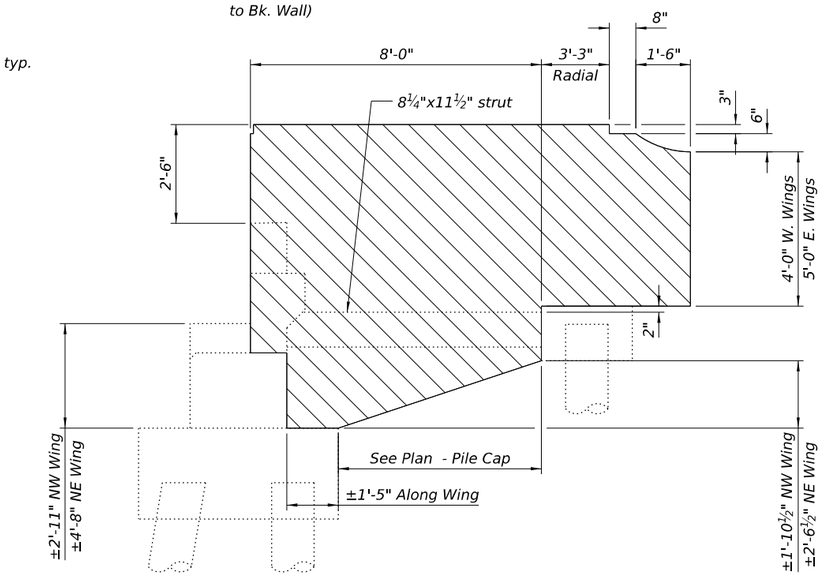

ELEVATION - WINGWALL REMOVAL

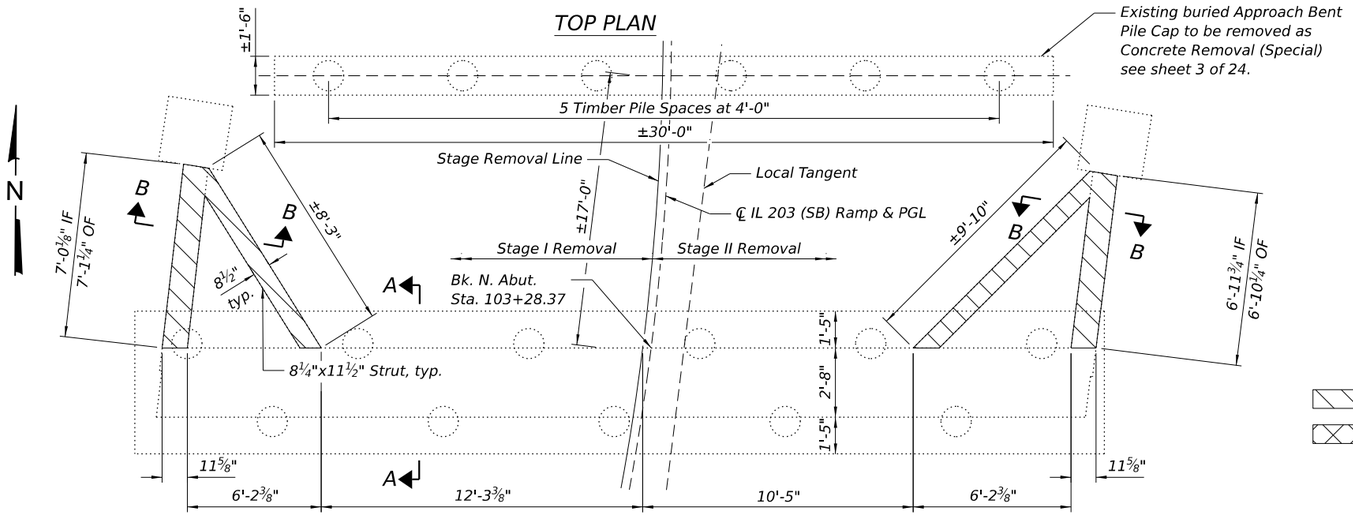

PLAN - PILE CAP

Notes:
Existing reinforcement shall be cleaned, straightened and incorporated into the new construction. Cost included with Concrete Removal.
Any reinforcement bars that are damaged during concrete removal operation shall be repaired or replaced using an approved bar splicer or anchorage system. Cost included with Concrete Removal.
IF indicates inside face.
OF indicates outside face.

Indicates Concrete Removal

Indicates Structural Repair of Concrete (Depth Equal to or Less than 5 inches)

BILL OF MATERIAL

ITEM	UNIT	TOTAL
Concrete Removal	Cu. Yd.	18.6
Concrete Removal (Special)	Cu. Yd.	2.5
Structural Repair of Concrete (Depth Equal to or Less than 5 inches)	Sq. Ft.	36

MODEL: $MODELNAMES$
FILE NAME: D876E84-018-0022-ABUT DEMO NO.dgn

Jacobs
525 West Monroe
Suite 1600
Chicago, IL 60661
(312) 251-3000

USER NAME = jacobspw18ics09$	DESIGNED - CJF	REVISED -	
	DRAWN - EAK	REVISED -	
PLOT SCALE = 0.16666667 ' / in.	CHECKED - ED	REVISED -	
PLOT DATE = 12/4/2025	DATE - 2025/10/03	REVISED -	

STATE OF ILLINOIS
DEPARTMENT OF TRANSPORTATION

NORTH ABUTMENT REMOVAL DETAILS
STRUCTURE NO. 082-0022

SCALE: NTS | SHEET 18 OF 24 SHEETS | STA. TO STA.

F.A.I. RTE.	SECTION	COUNTY	TOTAL SHEETS	SHEET NO.
70	Section82-(5,6)RS-2, 60-6RS-2	MADISON & ST. CLAIR	678	428
		CONTRACT NO. 76E84		
		ILLINOIS	FED. AID PROJECT	

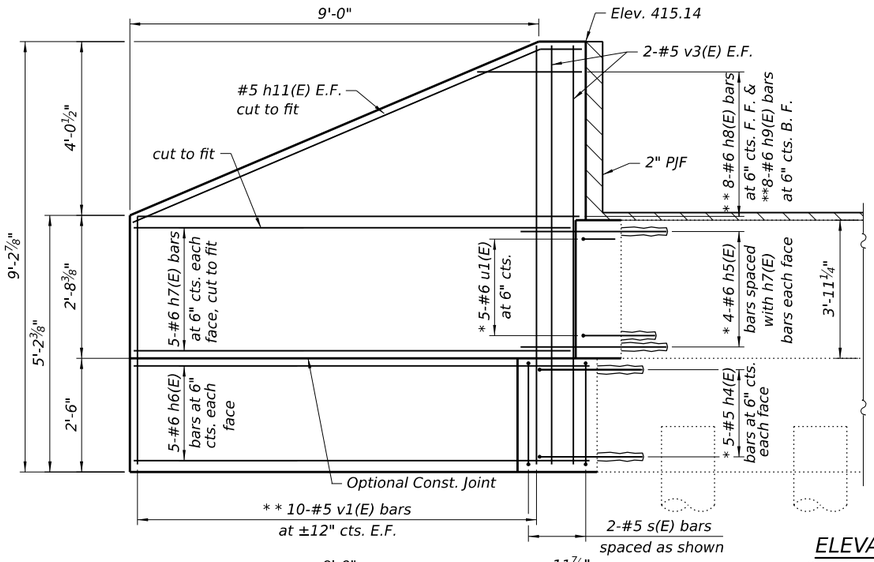

ELEVATION
(Looking South)

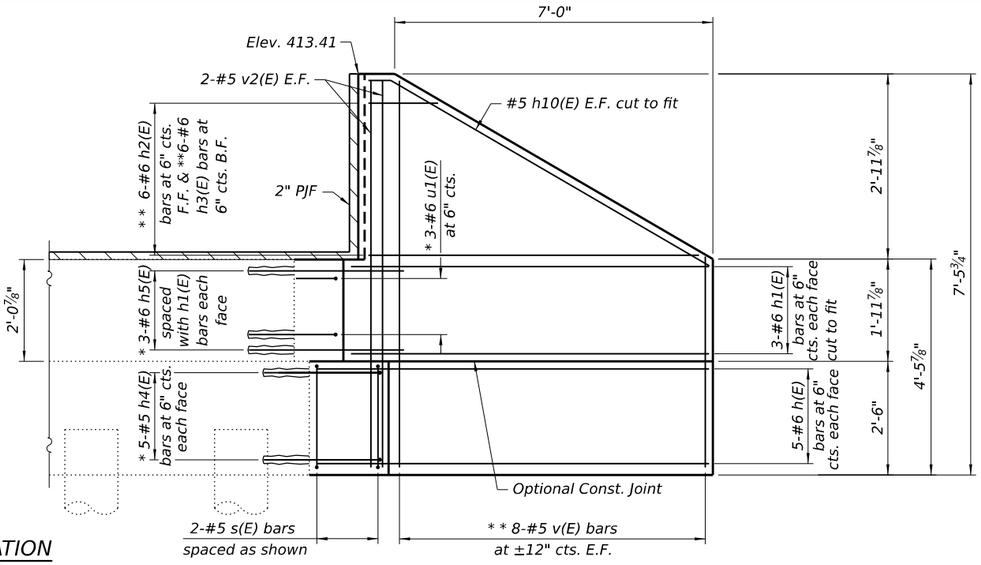

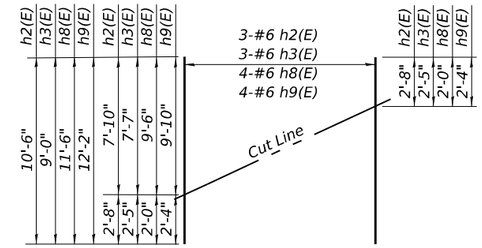

FIELD CUTTING DIAGRAM
Order h2(E), h3(E), h8(E), and h9(E) bars full length. Cut as shown and use remainder of bars in upper wing.

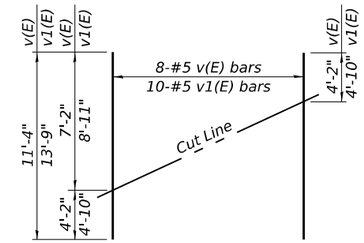

FIELD CUTTING DIAGRAM
Order v(E) and v1(E) bare full length bars full length. Cut as shown and use remainder of bars in opposite face.

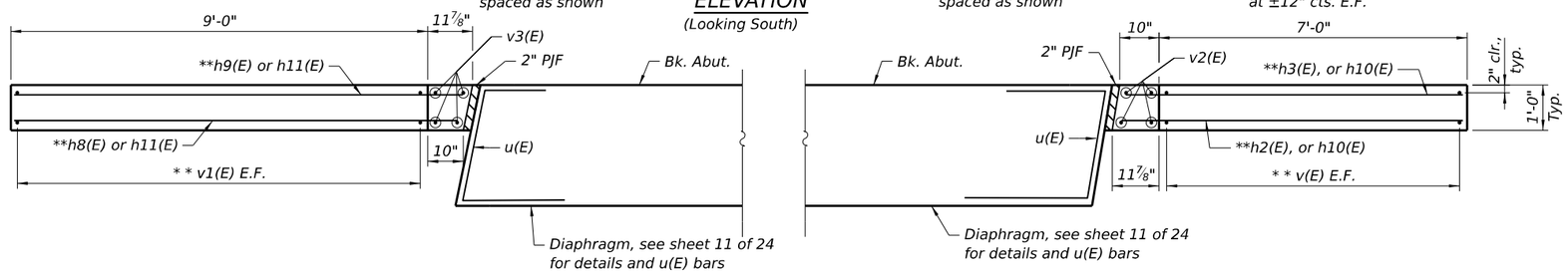

TOP OF WALL PLAN

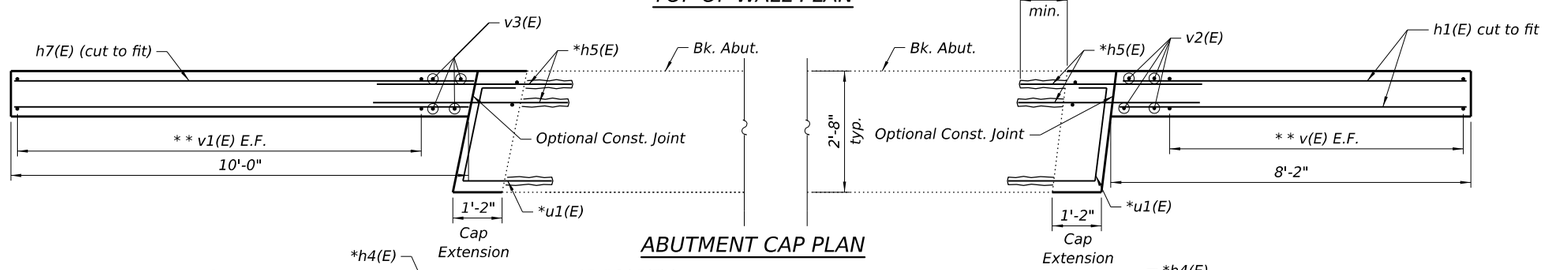

ABUTMENT CAP PLAN

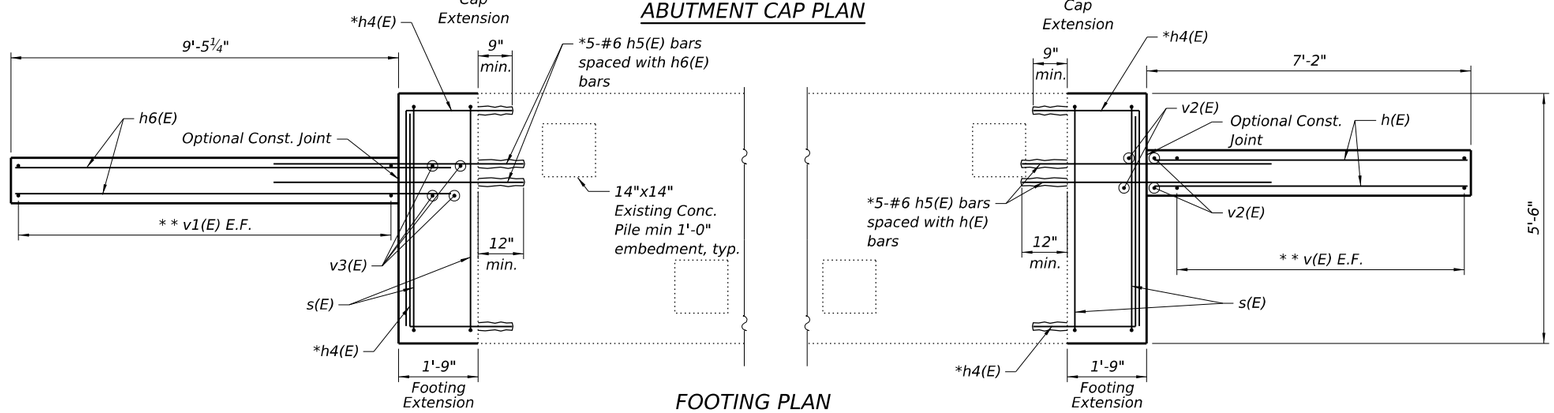

FOOTING PLAN

MINIMUM BAR LAP
#6 bar = 3'-3"

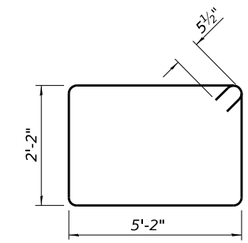

BAR s(E)

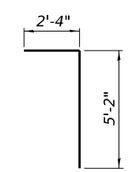

BAR h4(E)

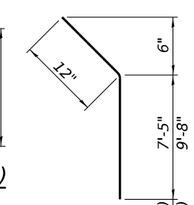

BAR h10(E) & h11(E)

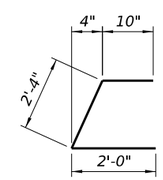

BAR u1(E)

BILL OF MATERIAL

Bar	No.	Size	Length	Shape
h(E)	10	#6	8'-7"	
h1(E)	6	#6	7'-10"	
h2(E)	3	#6	10'-6"	
h3(E)	3	#6	9'-0"	
h4(E)	20	#5	7'-6"	
h5(E)	34	#6	6'-0"	
h6(E)	10	#6	10'-10"	
h7(E)	10	#6	9'-10"	
h8(E)	4	#6	11'-6"	
h9(E)	4	#6	12'-2"	
h10(E)	2	#5	8'-5"	
h11(E)	2	#5	10'-8"	
s(E)	4	#5	15'-7"	
u1(E)	8	#6	5'-2"	
v(E)	8	#5	11'-4"	
v1(E)	10	#5	13'-9"	
v2(E)	4	#5	7'-2"	
v3(E)	4	#5	8'-11"	
Structure Excavation			Cu. Yd.	80
Concrete Structures			Cu. Yd.	6.9
Reinforcement Bars, Epoxy Coated			Pound	1670

Notes:
h5(E) bars in footing elevation view are not shown for clarity.
F.F. indicates front face.
B.F. indicates back face.
E.F. indicates each face.

*Epoxy grout bars as detailed drilled holes according to Section 584 of the Standard Specifications. All grouted bars shall have a 4" cl. to the edge of existing concrete.
** See Field Cutting Diagram

MODEL: $MODELNAMES
FILE NAME: D876E84-019-0022-SO ABUT.dgn

Jacobs
525 West Monroe
Suite 1600
Chicago, IL 60661
(312) 251-3000

USER NAME = jacobspw18lcs09$	DESIGNED - CJF	REVISED -	
	DRAWN - EAK	REVISED -	
PLOT SCALE = 0.16666667 ' / in.	CHECKED - ED	REVISED -	
PLOT DATE = 12/4/2025	DATE - 2025/10/03	REVISED -	

STATE OF ILLINOIS
DEPARTMENT OF TRANSPORTATION

SOUTH ABUTMENT
STRUCTURE NO. 082-0022

SCALE: NTS | SHEET 19 OF 24 SHEETS | STA. | TO STA.

F.A.I. RTE.	SECTION	COUNTY	TOTAL SHEETS	SHEET NO.
70	Section82-(5,6)RS-2, 60-6RS-2	MADISON & ST. CLAIR	678	429
		CONTRACT NO. 76E84		
		ILLINOIS	FED. AID PROJECT	

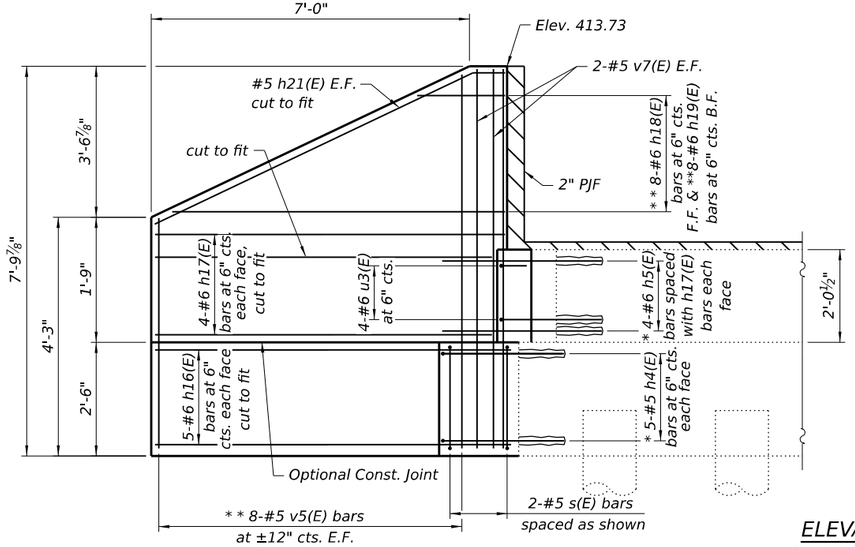

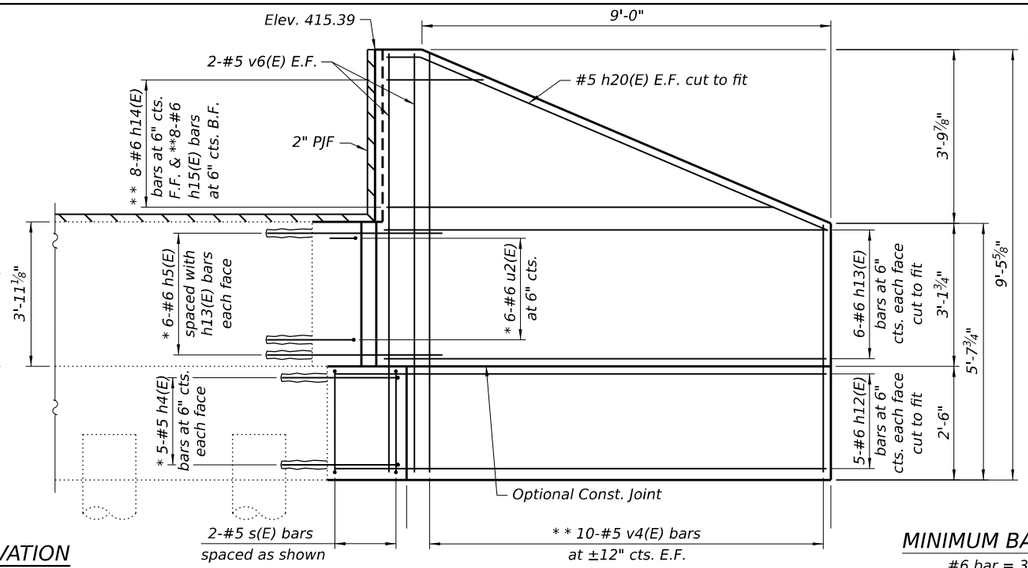

ELEVATION
(Looking North)

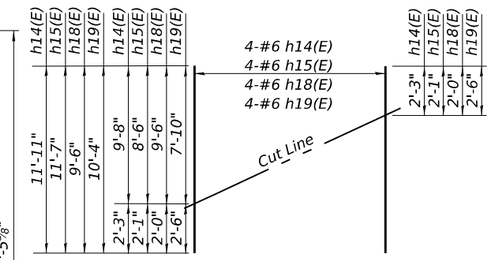

FIELD CUTTING DIAGRAM
Order h14(E), h15(E), h18(E), and h19(E) bars full length. Cut as shown and use remainder of bars in upper wing.

MINIMUM BAR LAP
#6 bar = 3'-3"

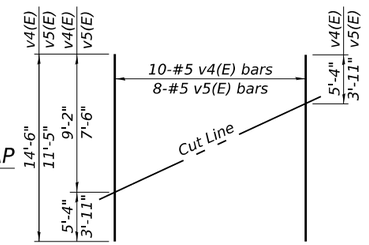

FIELD CUTTING DIAGRAM
Order v4(E) and v5(E) bars full length. Cut as shown and use remainder of bars in opposite face.

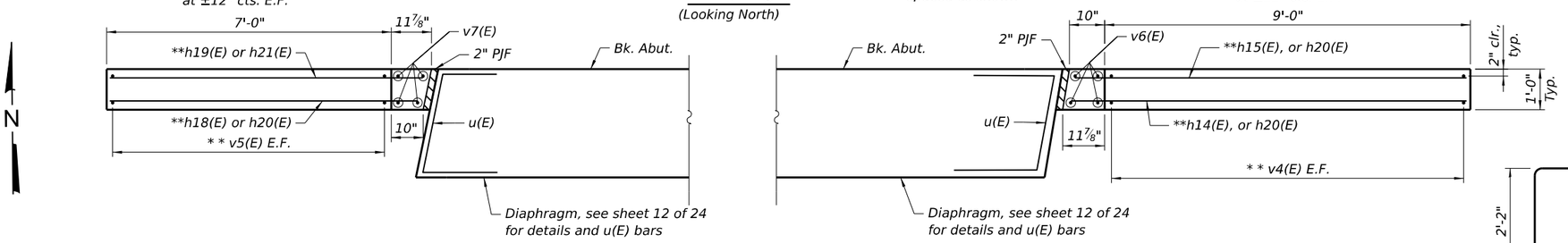

TOP OF WALL PLAN

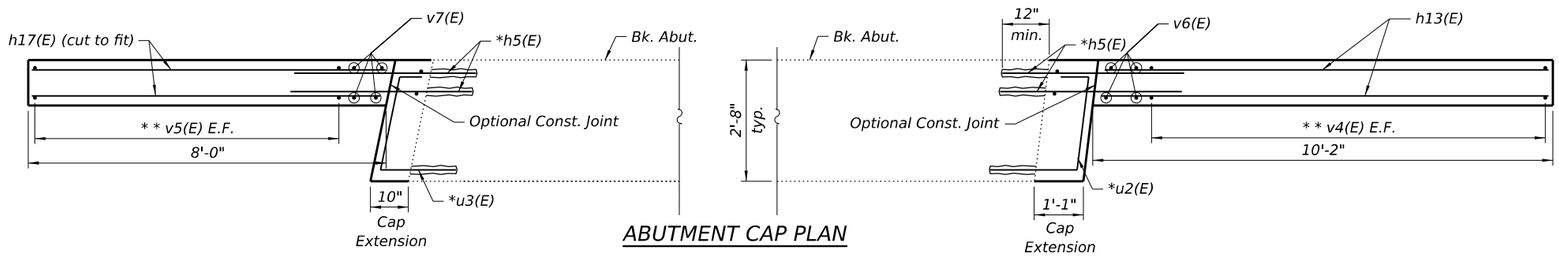

ABUTMENT CAP PLAN

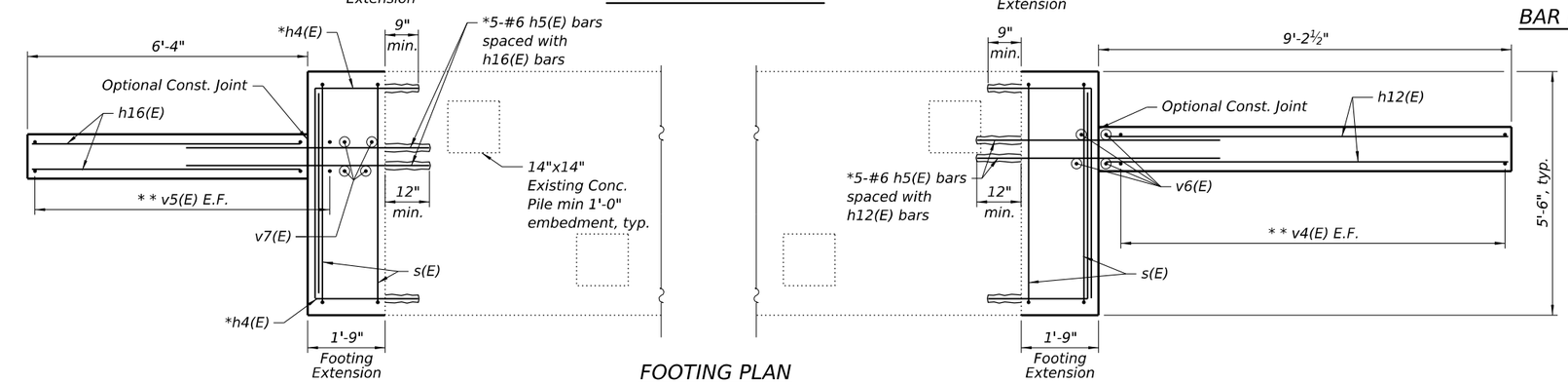

FOOTING PLAN

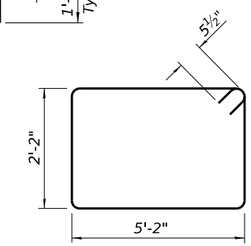

BAR s(E)

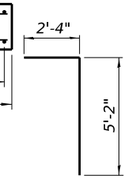

BAR h4(E)

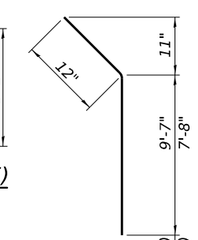

BAR h20(E) & h21(E)

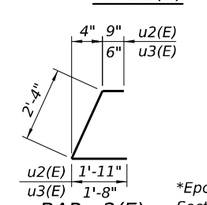

BAR u2(E) & u3(E)

BILL OF MATERIAL

Bar	No.	Size	Length	Shape
h4(E)	20	#5	7'-6"	
h5(E)	40	#6	6'-0"	
h12(E)	10	#6	10'-8"	
h13(E)	12	#6	9'-8"	
h14(E)	4	#6	11'-11"	
h15(E)	4	#6	11'-7"	
h16(E)	10	#6	7'-9"	
h17(E)	8	#6	8'-2"	
h18(E)	4	#6	9'-6"	
h19(E)	4	#6	10'-4"	
h20(E)	2	#5	10'-7"	
h21(E)	2	#5	8'-8"	
s(E)	4	#5	15'-7"	
u2(E)	6	#6	5'-0"	
u3(E)	4	#6	4'-6"	
v4(E)	10	#5	14'-6"	
v5(E)	8	#5	11'-5"	
v6(E)	4	#5	9'-2"	
v7(E)	4	#5	7'-6"	
Structure Excavation		Cu. Yd.	87	
Concrete Structures		Cu. Yd.	6.9	
Reinforcement Bars, Epoxy Coated		Pound	1820	

Notes:
h5(E) bars in footing elevation view are not shown for clarity.
F.F. indicates front face.
B.F. indicates back face.
E.F. indicates each face.

*Epoxy grout bars as detailed drilled holes according to Section 584 of the Standard Specifications. All grouted bars shall have a 4" cl. to the edge of existing concrete.
**See Field Cutting Diagram

MODEL: $MODELNAMES
FILE NAME: D876E84-020-0022-NO ABUT.dgn

Jacobs
525 West Monroe
Suite 1600
Chicago, IL 60661
(312) 251-3000

USER NAME = jacobspw18ics10$	DESIGNED - CJF	REVISED -	
	DRAWN - EAK	REVISED -	
PLOT SCALE = 0.16666667 ' / in.	CHECKED - ED	REVISED -	
PLOT DATE = 12/4/2025	DATE - 2025/10/03	REVISED -	

STATE OF ILLINOIS
DEPARTMENT OF TRANSPORTATION

NORTH ABUTMENT
STRUCTURE NO. 082-0022

SCALE: NTS | SHEET 20 OF 24 SHEETS | STA. | TO STA.

F.A.I. RTE.	SECTION	COUNTY	TOTAL SHEETS	SHEET NO.
70	Section82-(5,6)RS-2, 60-6RS-2	MADISON & ST. CLAIR	678	430

CONTRACT NO. 76E84
ILLINOIS | FED. AID PROJECT

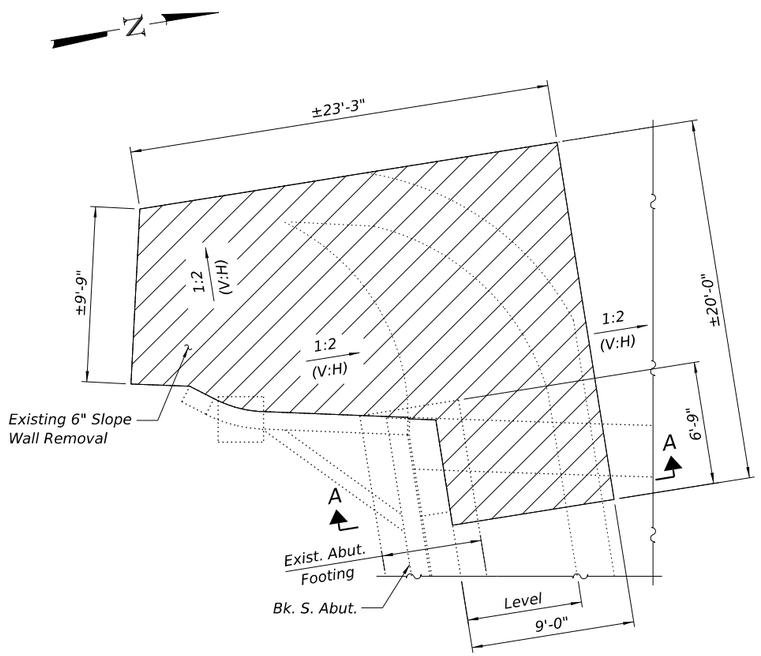

SOUTH ABUTMENT WEST END

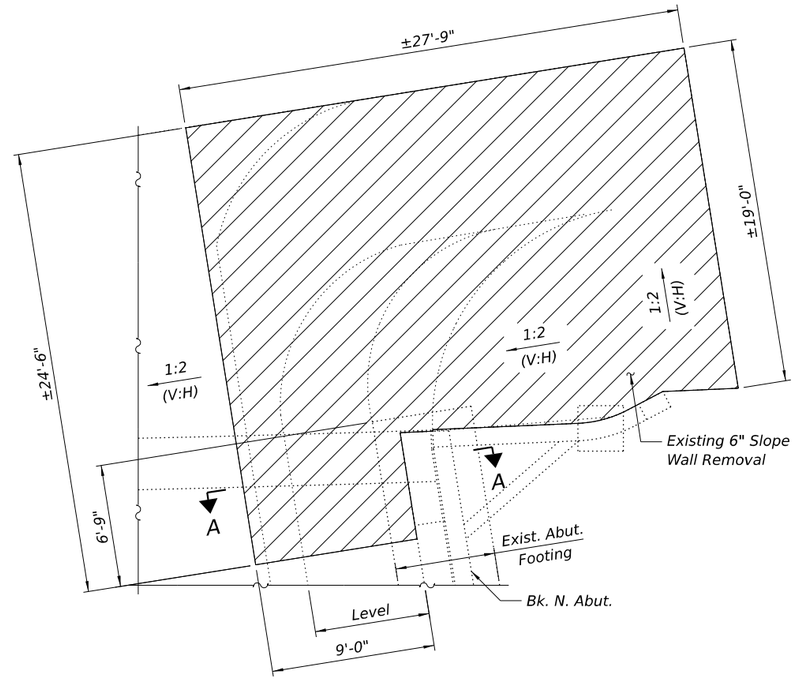

NORTH ABUTMENT WEST END

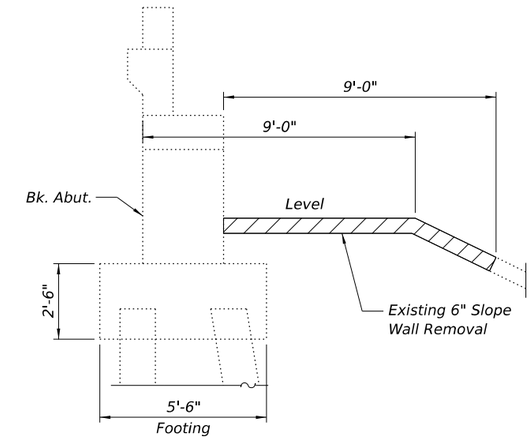

SECTION A-A

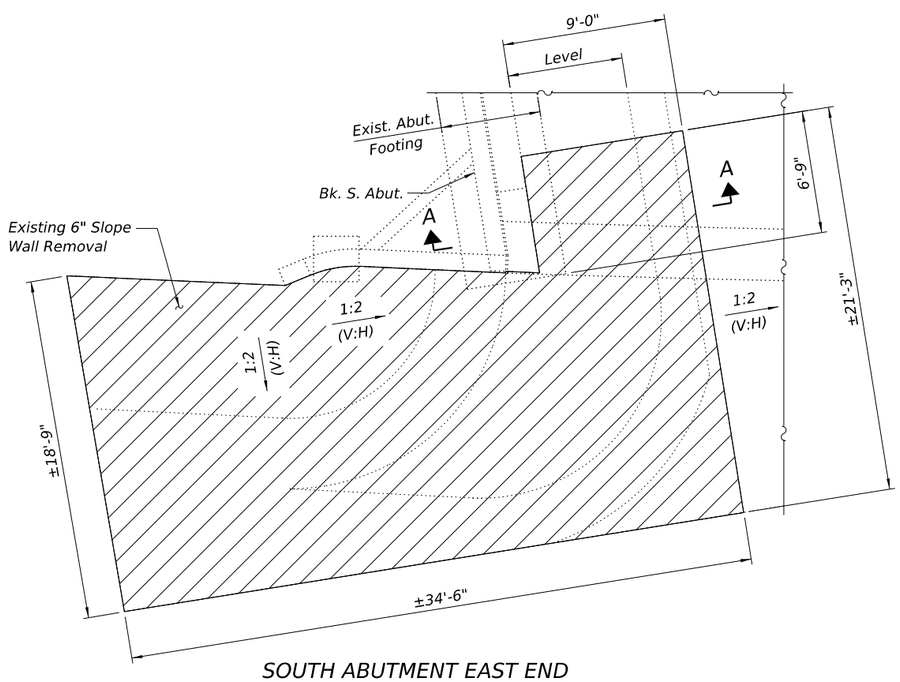

SOUTH ABUTMENT EAST END

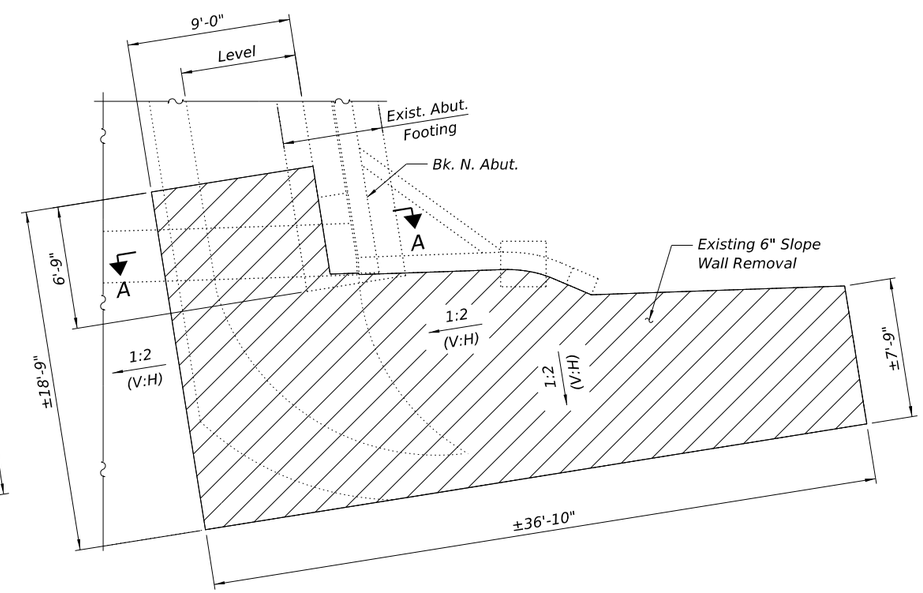

NORTH ABUTMENT EAST END

Notes:
Dimensions shown are in plan. Actual dimensions of slopewall to be removed is subject to sloped ground conditions.

BILL OF MATERIAL

ITEM	UNIT	TOTAL
Slope Wall Removal	Sq. Yd.	224

MODEL: $MODELNAME$
FILE NAME: D876E84-021-0022-SLOPE DEMO PLAN.dgn

Jacobs
525 West Monroe
Suite 1600
Chicago, IL 60661
(312) 251-3000

USER NAME = jacobspw18lcs09$	DESIGNED - CJF	REVISED -	
	DRAWN - EAK	REVISED -	
PLOT SCALE = 0.16666667 ' / in.	CHECKED - ED	REVISED -	
PLOT DATE = 12/4/2025	DATE - 2025/10/03	REVISED -	

STATE OF ILLINOIS
DEPARTMENT OF TRANSPORTATION

EXISTING SLOPE WALL REMOVAL
STRUCTURE NO. 082-0022

SCALE: NTS | SHEET 21 OF 24 SHEETS | STA. | TO STA.

F.A.I. RTE.	SECTION	COUNTY	TOTAL SHEETS	SHEET NO.
70	Section82-(5,6)RS-2, 60-6RS-2	MADISON & ST. CLAIR	678	431

CONTRACT NO. 76E84
ILLINOIS | FED. AID PROJECT

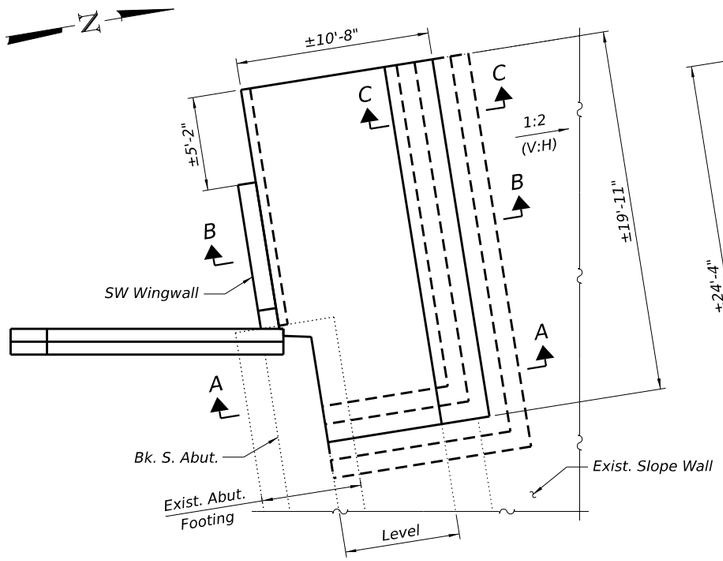

SOUTH ABUTMENT WEST END

(Bridge Slab not shown)

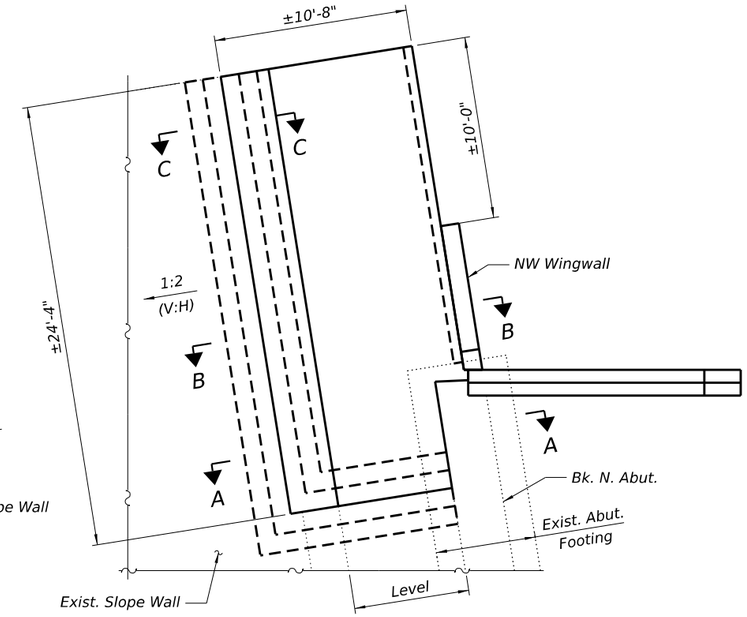

NORTH ABUTMENT WEST END

(Bridge Slab not shown)

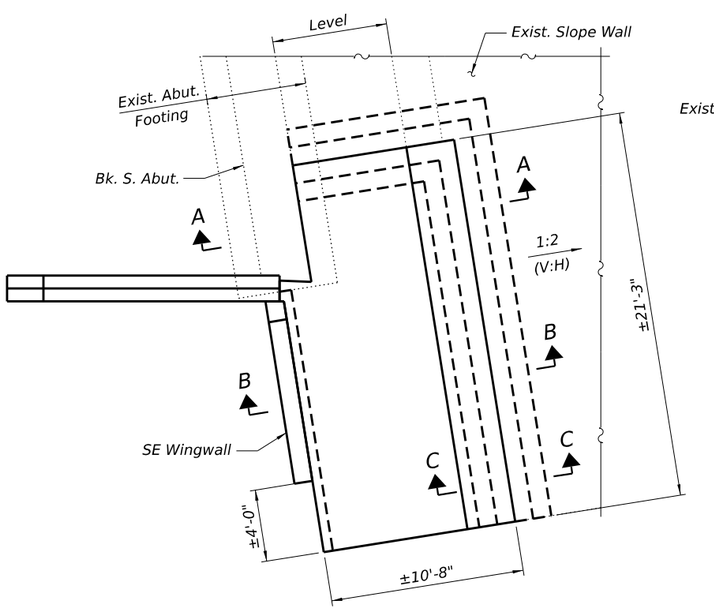

SOUTH ABUTMENT EAST END

(Bridge Slab not shown)

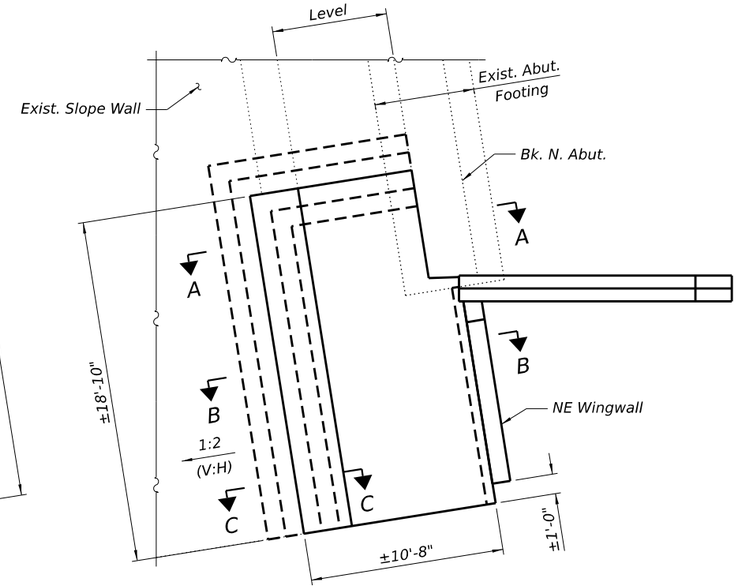

NORTH ABUTMENT EAST END

(Bridge Slab not shown)

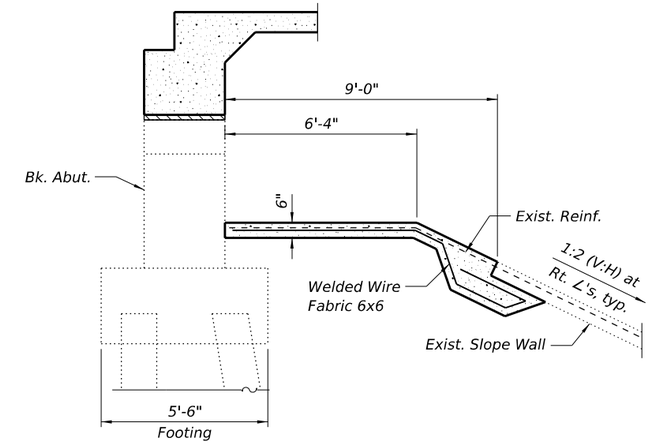

SECTION A-A

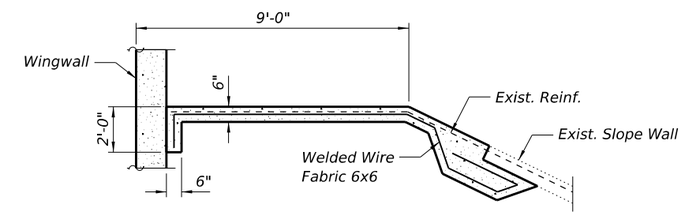

SECTION B-B

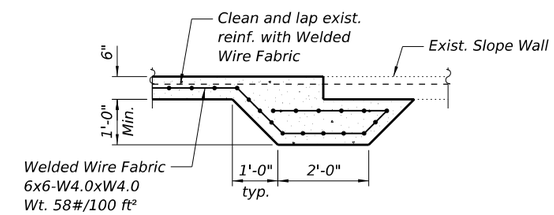

SECTION C-C

BILL OF MATERIAL

ITEM	UNIT	TOTAL
Slope Wall 6 Inch	Sq. Yd.	100

Notes:
Slope wall shall be reinforced with welded wire fabric, 6in. x 6 in. - W4.0 x W4.0, weighing 58 lbs. per 100 sq. ft.
Dimensions shown are in plan. Actual dimensions of slopewall to be placed is subject to sloped ground conditions.

MODEL: $MODELNAME$
FILE NAME: D876E84-0022-0022-SLOPE PLAN.dgn

Jacobs
525 West Monroe
Suite 1600
Chicago, IL 60661
(312) 251-3000

USER NAME = jacobspw18lcs09$	DESIGNED - CJF	REVISED -	
	DRAWN - EAK	REVISED -	
PLOT SCALE = 0.16666667 ' / in.	CHECKED - ED	REVISED -	
PLOT DATE = 12/4/2025	DATE - 2025/10/03	REVISED -	

STATE OF ILLINOIS
DEPARTMENT OF TRANSPORTATION

SLOPE WALL REPLACEMENT
STRUCTURE NO. 082-0022

SCALE: NTS | SHEET 22 OF 24 SHEETS | STA. | TO STA.

F.A.I. RTE.	SECTION	COUNTY	TOTAL SHEETS	SHEET NO.
70	Section82-(5,6)RS-2, 60-6RS-2	MADISON & ST. CLAIR	678	432

CONTRACT NO. 76E84

ILLINOIS | FED. AID PROJECT

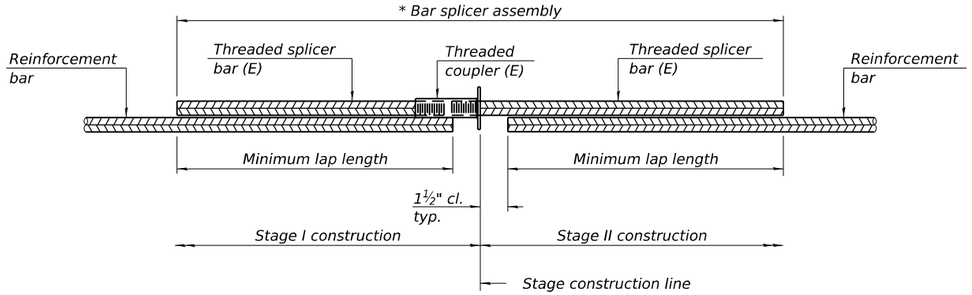

STANDARD BAR SPLICER ASSEMBLY PLAN

Only bar splicer assemblies as presented on the approved QPL list may be used.

Threaded splicer bar length = min. lap length + 1½" + thread length

* Epoxy not required on Bar Splicer Assembly components used in conjunction with black bars.

Location	Bar size	No. assemblies required	Minimum lap length
Deck	#5	305	3'-10"
Diaphragms	#6	6	4'-5"
Appr. Slab	#5	92	3'-10"
Appr. Slab	#8	120	5'-2"
Appr. Footing	#5	80	3'-10"

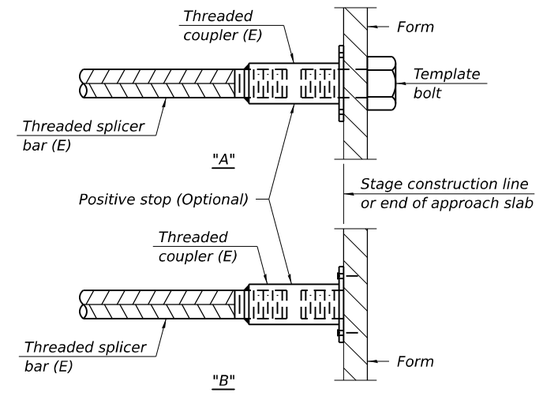

INSTALLATION AND SETTING METHODS

"A" : Set bar splicer assembly by means of a template bolt.
"B" : Set bar splicer assembly by nailing to wood forms or cementing to steel forms.
(E) : Indicates epoxy coating.

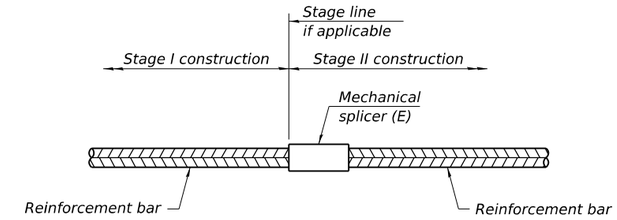

STANDARD MECHANICAL SPLICER

Location	Bar size	No. assemblies required

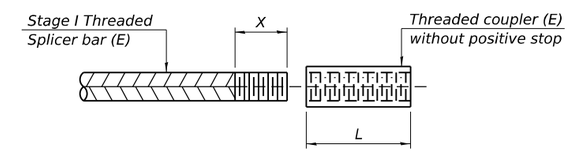

THREADING OF ASSEMBLIES

The threaded length "X" shall be no more than L/2. The bar should be tightened until 0-1 thread(s) is/are exposed.

Notes:
Splicer bars shall be deformed with threaded ends and have a minimum 60 ksi yield strength.
All reinforcement shall be lapped and tied to the splicer bars.
Bar splicer assemblies shall be epoxy coated according to the requirements for reinforcement bars. See Section 508 of the Standard Specifications.
See approved list of bar splicer assemblies and mechanical splicers for alternatives.

BSD-1 4-4-2025

MODEL: $MODELNAME$
FILE NAME: D876E84-023-0022-SPLICE.dgn

Jacobs
525 West Monroe
Suite 1600
Chicago, IL 60661
(312) 251-3000

USER NAME = jacobspw18lcs10$	DESIGNED - CJF	REVISED -	
	DRAWN - EAK	REVISED -	
PLOT SCALE = 2.000 ' / in.	CHECKED - ED	REVISED -	
PLOT DATE = 12/4/2025	DATE - 2025/10/03	REVISED -	

STATE OF ILLINOIS
DEPARTMENT OF TRANSPORTATION

BAR SPLICER ASSEMBLY AND MECHANICAL SPLICER DETAILS
STRUCTURE NO. 082-0022

SCALE: NTS | SHEET 23 OF 24 SHEETS | STA. | TO STA.

F.A.I. RTE.	SECTION	COUNTY	TOTAL SHEETS	SHEET NO.
70	Section82-(5,6)RS-2, 60-6RS-2	MADISON & ST. CLAIR	678	433

CONTRACT NO. 76E84
ILLINOIS | FED. AID PROJECT

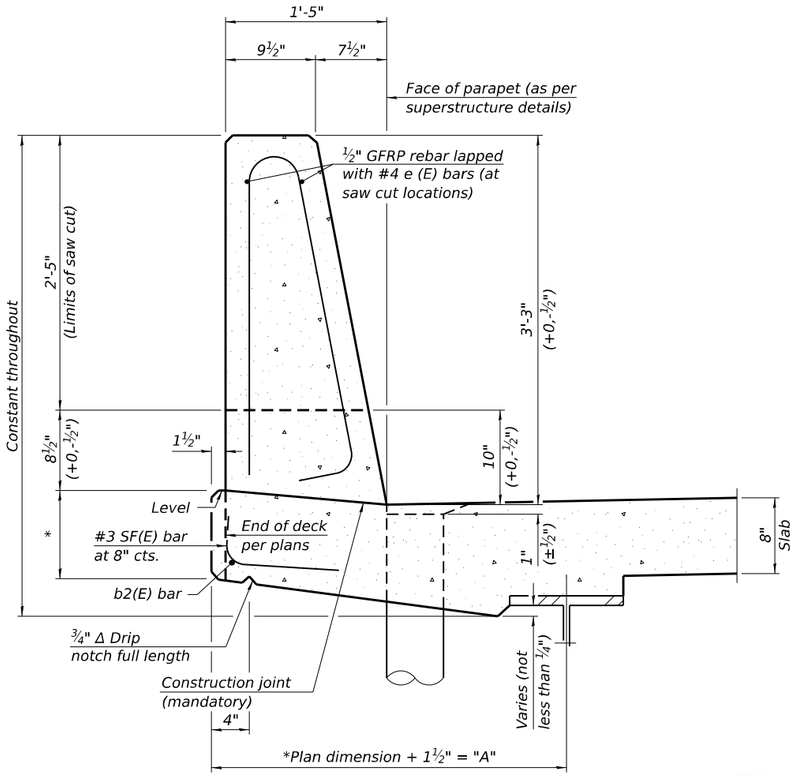

39" CONSTANT-SLOPE PARAPET SECTION

(Showing dimensions, d(E), and ½" Ø GFRP rebar)

STEEL SUPERSTRUCTURES

*See Superstructure Details.

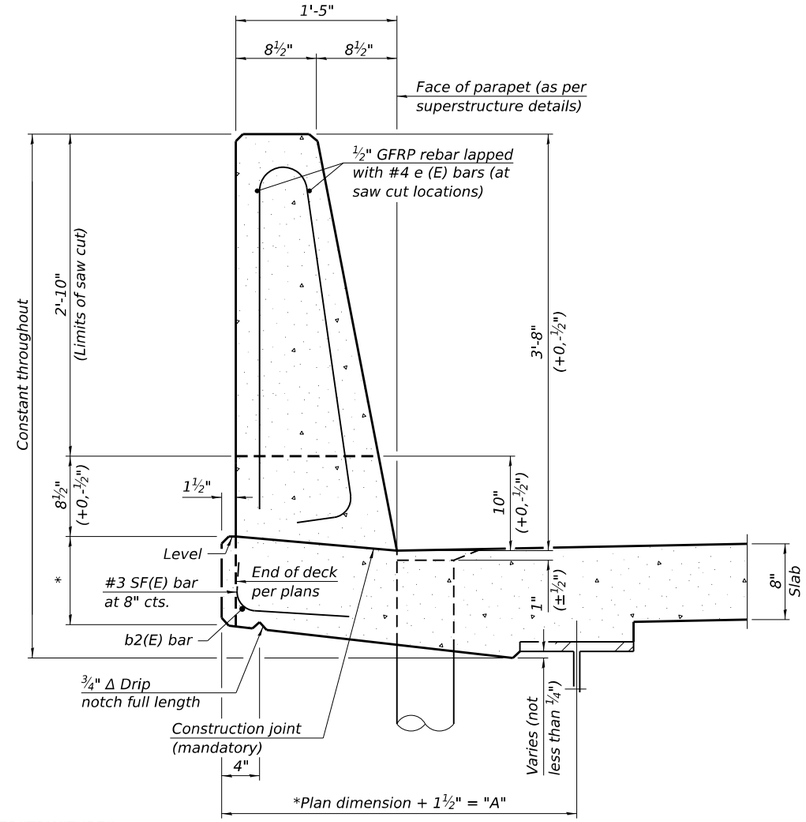

44" CONSTANT-SLOPE PARAPET SECTION

(Showing dimensions, d(E), and ½" Ø GFRP rebar)

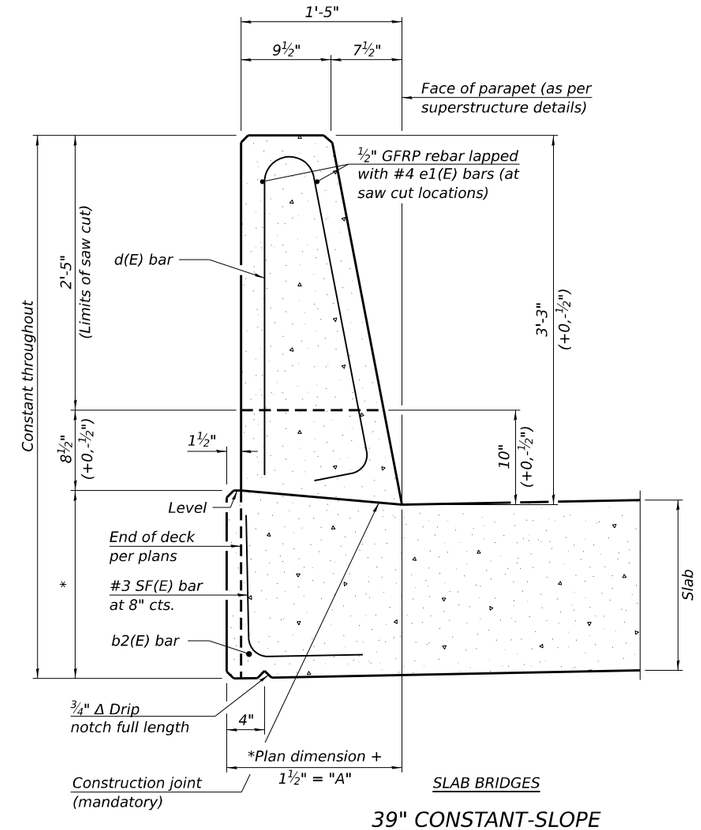

SLAB BRIDGES

39" CONSTANT-SLOPE PARAPET SECTION

(Showing dimensions, d(E), and ½" Ø GFRP rebar)

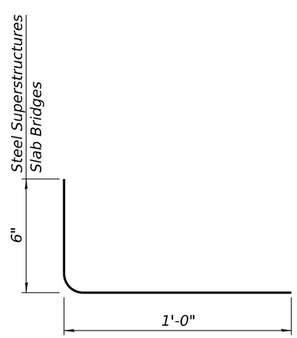

SF(E) BAR

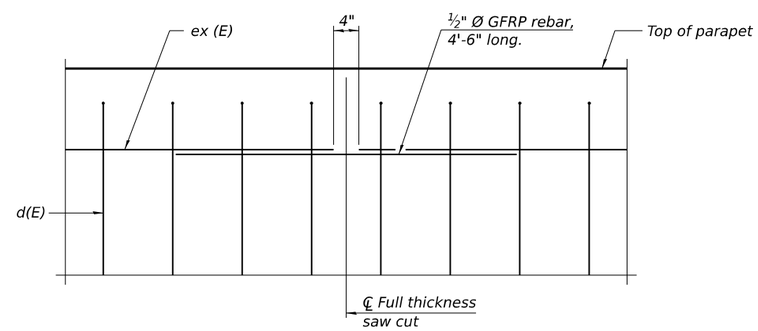

DETAIL - GFRP REBAR STIFFENING ELEVATION

(Place as shown in parapet section at each parapet joint location.)

Notes:
All dimensions shall remain the same as shown on superstructure details, except dimension "A" which is to be revised as shown.
Additional concrete needed to revise dimension "A" (39" and 44" parapets):
Steel Superstructures: 0.00348 cu. yds./ft.
Slab Bridge Superstructures: cu. yds./ft.
Place full depth aluminum sheets as shown on superstructure details.
Replace all cork joint filler locations with a full thickness saw cut.
Steel and slab superstructures shown. Other superstructure types similar.

SFP 39-44 10/27/2023

MODEL: $MODELNAMES
FILE NAME: D876E84-0234-0022-SLIPFORM.dgn

Jacobs
525 West Monroe
Suite 1600
Chicago, IL 60661
(312) 251-3000

USER NAME = jacobspw18lcs10$	DESIGNED - CJF	REVISED -	
	DRAWN - EAK	REVISED -	
PLOT SCALE = 2,000 ' / in.	CHECKED - ED	REVISED -	
PLOT DATE = 12/4/2025	DATE - 2025/10/03	REVISED -	

STATE OF ILLINOIS
DEPARTMENT OF TRANSPORTATION

CONCRETE PARAPET SLIPFORMING OPTION
STRUCTURE NO. 082-0022

SCALE: NTS | SHEET 24 OF 24 SHEETS | STA. | TO STA.

F.A.I. RTE.	SECTION	COUNTY	TOTAL SHEETS	SHEET NO.
70	Section82-(5,6)RS-2, 60-6RS-2	MADISON & ST. CLAIR	678	434
		CONTRACT NO. 76E84		
		ILLINOIS	FED. AID PROJECT	

Existing Structure: Structure Number 082-0028 originally built in 1960 and superstructure replaced in 1998 under Section 82-5HBR-2. Previously carried F.A.P. 586 currently carries F.A.P. 594 over F.A.I. 70.
The superstructure consists of a reinforced concrete deck that is composite with steel wide flange beams. The superstructure is supported by reinforced concrete piers and pile stub abutments. The structure is 281'-9½" back to back abutments and 70'-2½" out to out.

Traffic Control: Traffic is to be maintained using stage construction.

No Salvage:

DESIGN STRESSES

FIELD UNITS (New Const.)

f'c = 4,000 psi (Superstructure)
fy = 60,000 psi (Reinforcement)

FIELD UNITS (Exist. Const.)

f'c = 3,500 psi (Superstructure)
f'c = 3,500 psi (Substructure)
fy = 60,000 psi (Superstructure & Substructure Reinforcement)
fy = 40,000 psi (Substructure Reinforcement)
fy = 50,000 psi (Structural Steel)

SCOPE OF WORK

1. Remove and replace existing expansion joints at both abutments with Preformed Strip Seals.
2. Perform partial depth repairs to bridge deck and approach slabs.
3. Repair broken curbs on approach slab ends.
4. Provide full sealant waterproofing system with 2¼" HMA overlay on the deck and approach slabs.
5. Adjust Bridge Approach Slab Drains as needed for 2¼" HMA overlay.
6. Vertically extend crashwalls on piers.
7. Install A3 surface riprap for erosion control along wingwalls.

LOADING HS-20

DESIGN SPECIFICATIONS

2002 AASHTO Standard Specifications for Highway Bridges, 17th Edition

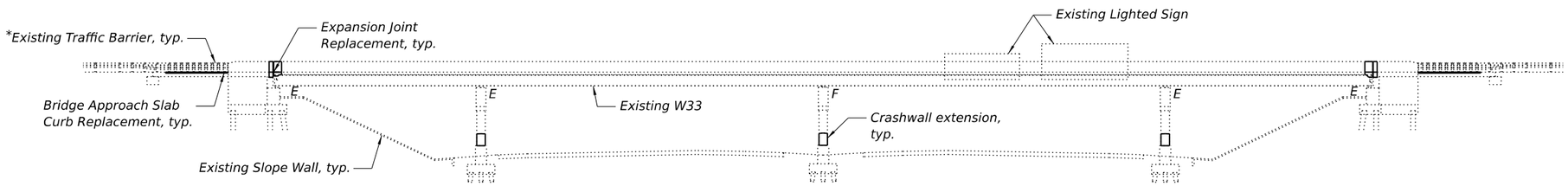

* Remove and reset Existing Traffic Barriers as needed to facilitate Bridge Approach Slab Curb replacement. Cost included with Concrete Superstructures.

ELEVATION

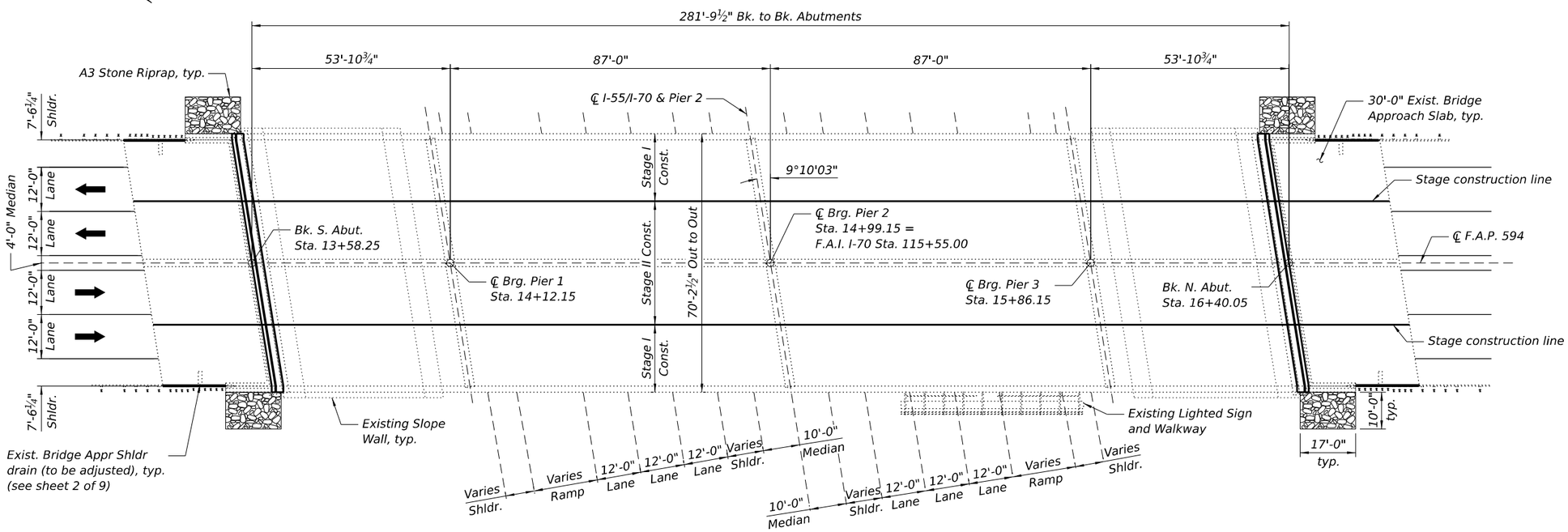

PLAN

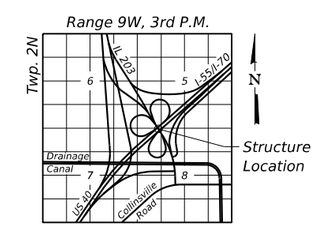

LOCATION SKETCH

LICENSED STRUCTURAL ENGINEER
CHADWICK J. FUESTING
081-005834
STATE OF ILLINOIS
Chad Fuesting
EXPIRES: 11/30/2026
DATE: 12/04/2025

Notes:
Stage Construction Limits are shown above for overlay installation.
For stage construction limits of joint replacement, see Sheet 5 of 9.

GENERAL PLAN AND ELEVATION
IL 203 (FAP 594) OVER I-55 / I-70
F.A.I. 70 - SEC. 82-(5,6)RS-2
ST. CLAIR COUNTY
STATION 14+99.15
STRUCTURE NO. 082-0028

MODEL: $MODELNAMES
FILE NAME: D876E84-001-0028-GPE.dgn

Jacobs
525 West Monroe
Suite 1600
Chicago, IL 60661
(312) 251-3000

USER NAME = jacobspw18ics11$	DESIGNED - ERC	REVISED -	
	DRAWN - EAK	REVISED -	
PLOT SCALE = 0:2 ':' / in.	CHECKED - CJF	REVISED -	
PLOT DATE = 12/4/2025	DATE - 2025/10/03	REVISED -	

STATE OF ILLINOIS
DEPARTMENT OF TRANSPORTATION

GENERAL PLAN & ELEVATION
STRUCTURE NO. 082–0028

SCALE: NTS | SHEET 1 OF 9 SHEETS | STA. | TO STA.

F.A.I. RTE.	SECTION	COUNTY	TOTAL SHEETS	SHEET NO.
70	Section82-(5,6)RS-2, 60-6RS-2	MADISON & ST. CLAIR	678	435
		CONTRACT NO. 76E84		
		ILLINOIS	FED. AID PROJECT	

GENERAL NOTES

No field welding is permitted except as specified in the contract documents.

Reinforcement bars designated (E) shall be epoxy coated.

Concrete Sealer shall be applied to the designated areas of the pier. The Concrete Sealer shall be a "film forming" type for horizontal surfaces.

Prior to pouring the new concrete deck, all heavy or loose rust, loose mill scale, and other loose detrimental foreign material shall be removed from the surfaces in contact with concrete (SSPC – SP3 standards). Tightly adhered paint may remain unless otherwise noted. Removal shall be accomplished by methods that will not damage the steel and the cost will be paid for according to Article 109.04 of the Standard Specifications.

Plan dimensions and details relative to the existing structure have been taken from existing plans and are subject to nominal construction variations. The Contractor shall field verify existing dimensions and details affecting new construction and make necessary approved adjustments prior to construction or ordering of materials. Such variations shall not be cause for additional compensation for a change in scope of the work, however, the Contractor will be paid for the quantity actually furnished at the unit price bid for the work.

Protective Coat shall be applied to the top surfaces of the new concrete at the joint and bridge approach slab curb replacements, including the top and inside vertical faces of the parapets and raised medians. Protective Coat shall not be applied to surfaces to which Waterproofing Membrane System is applied.

The Contractor shall take appropriate measures to assure the Protective Coat is not applied to the floor drains.

Joint openings shall be adjusted according to Article 520.04 of the Standard Specifications when the joint replacement concrete is poured at an ambient temperature other than 50°F.

The deck surface from the joint replacements shall have its final finish tined according to Article 420.09(e)(1) of the Standard Specifications. Cost included with Concrete Superstructure.

All Structural steel shall conform to AASHTO Classification M-270 Gr. 36 unless otherwise noted.

INDEX OF SHEETS

1 General Plan & Elevation
2 General Data
3 Stage Construction Details
4 Bridge Deck Repairs
5 Joint Removal and Replacement Details
6 Joint Reconstruction Details
7 Preformed Joint Strip Seal
8 Pier Crashwall Details
9 Bar Splicer Assembly and Mechanical Splicer Details

TOTAL BILL OF MATERIAL

ITEM	UNIT	SUPER	SUB	TOTAL
Stone Riprap, Class A3	Sq. Yd.	76	---	76
Filter Fabric	Sq. Yd.	76	---	76
Polymerized Hot-Mix Asphalt Binder Course, IL-4.75, N50	Ton	102	---	102
Polymerized Hot-Mix Asphalt Surface Course, Stone Matrix Asphalt, 9.5, Mix "E", N80	Ton	205	---	205
Concrete Removal	Cu. Yd.	18.8	---	18.8
Concrete Structures	Cu. Yd.	---	26.0	26.0
Concrete Superstructure	Cu. Yd.	22.1	---	22.1
Protective Coat	Sq. Yd.	20.2	---	20.2
Reinforcement Bars, Epoxy Coated	Pound	3,070	2,950	6,020
Bar Splicers	Each	48	---	48
Preformed Joint Strip Seal	Foot	143	---	143
Full Lane Sealant Waterproofing System	Sq. Yd.	2,071	---	2,071
Concrete Sealer	Sq. Ft.	---	859	859
Drainage Scuppers to be Adjusted	Each	4	---	4
Deck Slab Repair (Partial)	Sq. Yd.	1	---	1

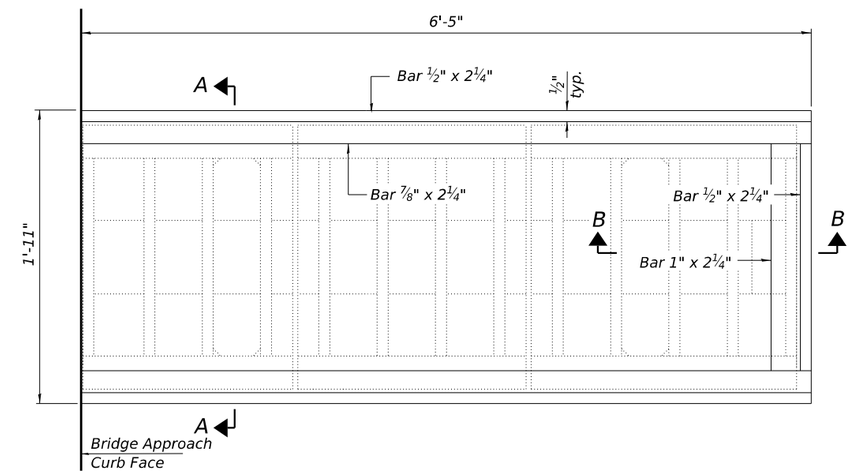

EXISTING APPROACH SHOULDER DRAIN GRATE ADJUSTMENT PLAN

Notes:
Cost of Approach Shoulder Drain Adjustment is included with Drainage Scuppers to be Adjusted.

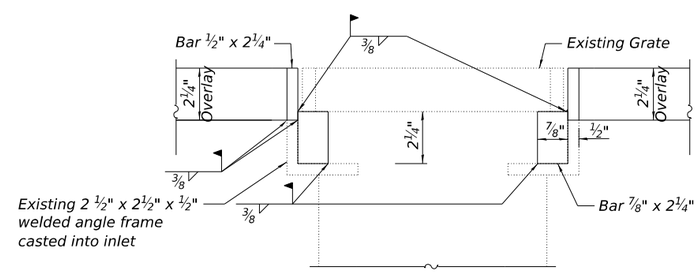

SECTION A-A

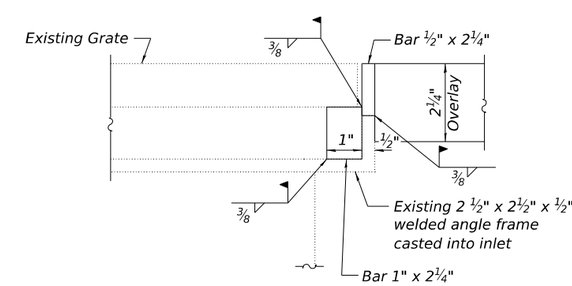

SECTION B-B

MODEL: $MODELNAMES
FILE NAME: D876E84-0002-0028-NOTES.dgn

Jacobs
525 West Monroe
Suite 1600
Chicago, IL 60661
(312) 251-3000

USER NAME = jacobspw18lcs09$	DESIGNED - ERC	REVISED -	
	DRAWN - EAK	REVISED -	
PLOT SCALE = 2,000 ' / in.	CHECKED - CJF	REVISED -	
PLOT DATE = 12/4/2025	DATE - 2025/10/03	REVISED -	

STATE OF ILLINOIS
DEPARTMENT OF TRANSPORTATION

GENERAL DATA
STRUCTURE NO. 082–0028

SCALE: NTS | SHEET 2 OF 9 SHEETS | STA. | TO STA.

F.A.I. RTE.	SECTION	COUNTY	TOTAL SHEETS	SHEET NO.
70	Section82-(5,6)RS-2, 60-6RS-2	MADISON & ST. CLAIR	678	436

CONTRACT NO. 76E84

ILLINOIS | FED. AID PROJECT

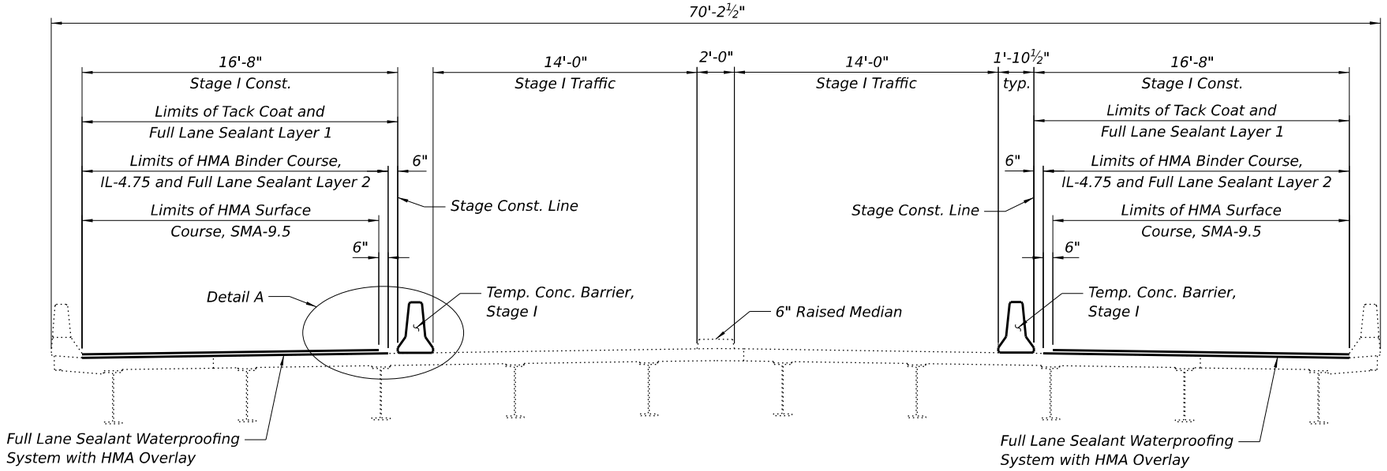

STAGE I CONSTRUCTION

(Looking North)

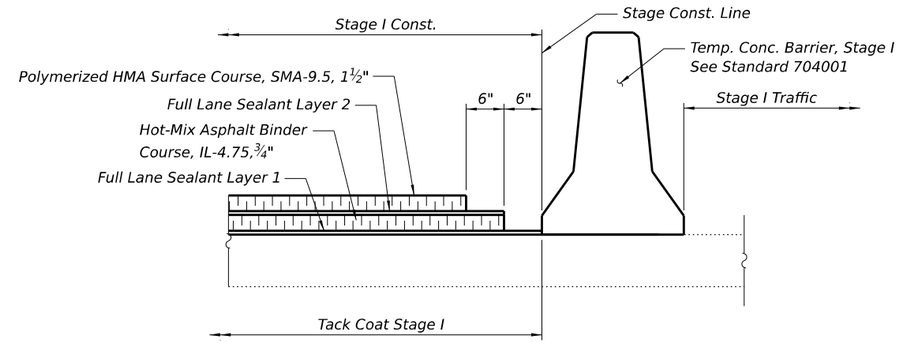

DETAIL A

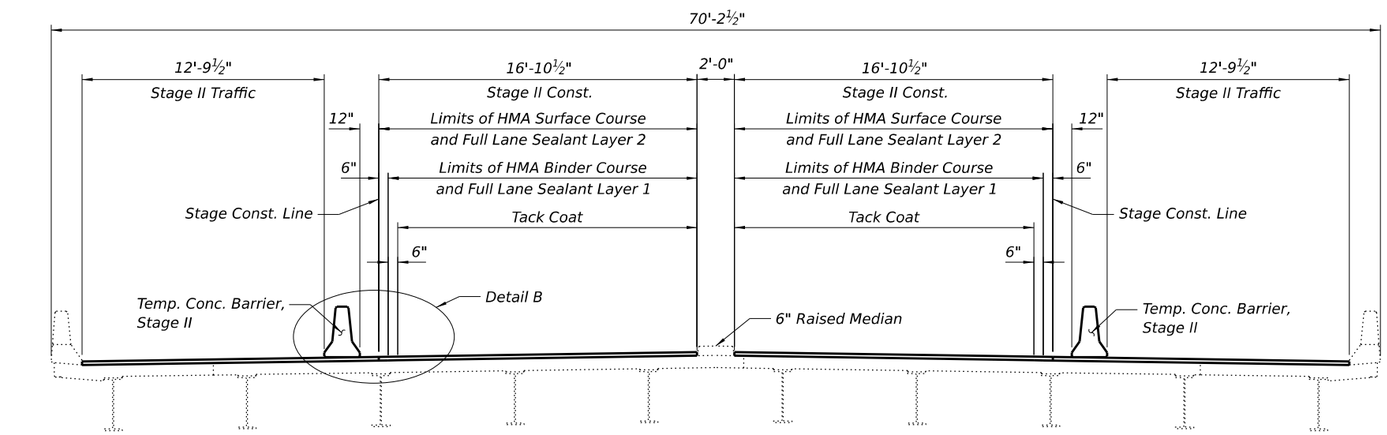

STAGE II CONSTRUCTION

(Looking North)

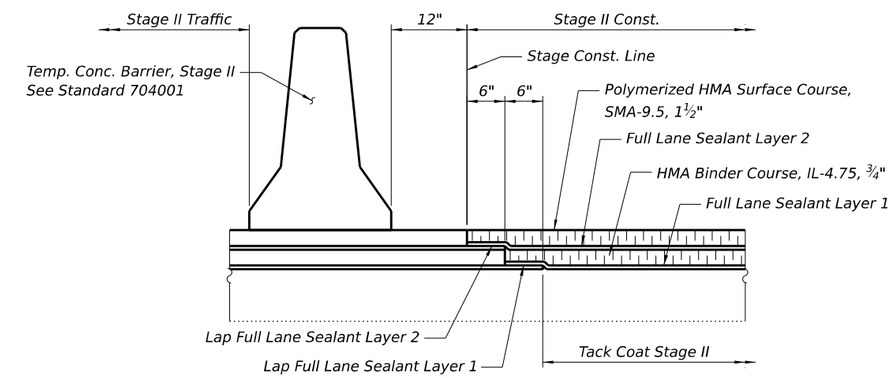

DETAIL B

Notes:
Bridge superstructure shown, approach slabs similar.

MODEL: $MODELNAMES
FILE NAME: D876E84-003-0028-STAGE.dgn

Jacobs
525 West Monroe
Suite 1600
Chicago, IL 60661
(312) 251-3000

USER NAME = Jacobspw18lcs09$	DESIGNED - ERC	REVISED -	
	DRAWN - EAK	REVISED -	
PLOT SCALE = 2,000 ' / in.	CHECKED - CJF	REVISED -	
PLOT DATE = 12/4/2025	DATE - 2025/10/03	REVISED -	

STATE OF ILLINOIS
DEPARTMENT OF TRANSPORTATION

STAGE CONSTRUCTION DETAILS
STRUCTURE NO. 082-0028

SCALE: NTS | SHEET 3 OF 9 SHEETS | STA. | TO STA.

F.A.I. RTE.	SECTION	COUNTY	TOTAL SHEETS	SHEET NO.
70	Section82-(5,6)RS-2, 60-6RS-2	MADISON & ST. CLAIR	678	437

CONTRACT NO. 76E84

ILLINOIS | FED. AID PROJECT

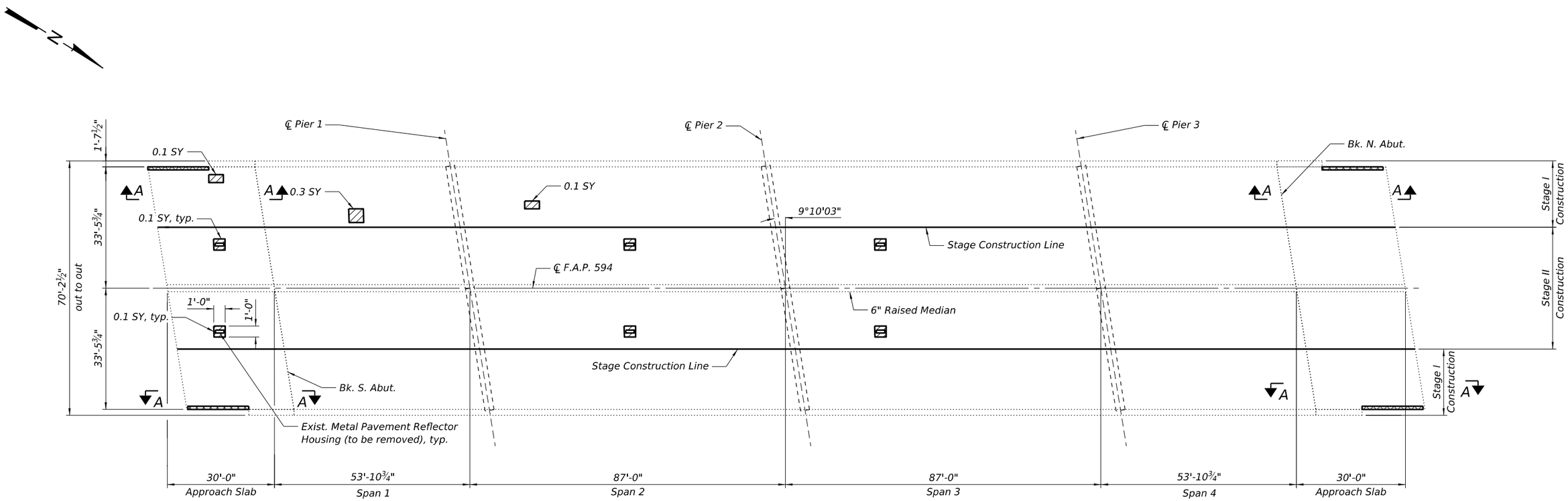

DECK REPAIR PLAN

LEGEND

- Deck Slab Repair (Partial) (For Information Only)
- Concrete Curb Removal and Replacement

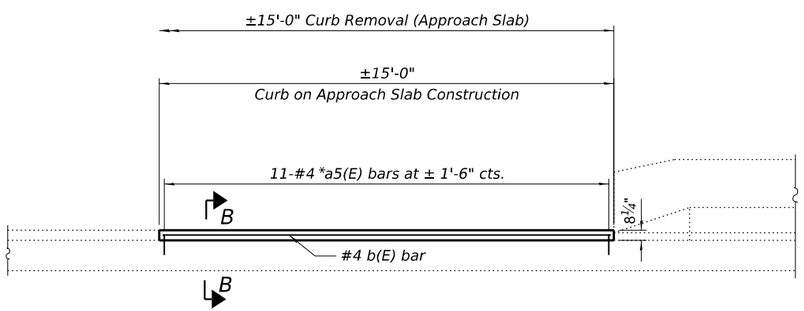

INSIDE ELEVATION OF CURB AND PARAPET, TYP
VIEW A-A

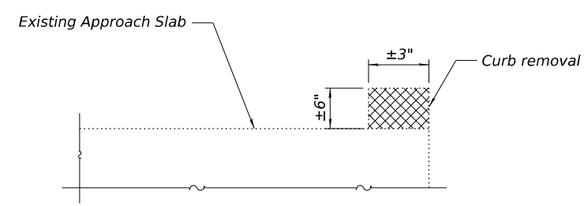

CURB REMOVAL DETAIL
SECTION B-B

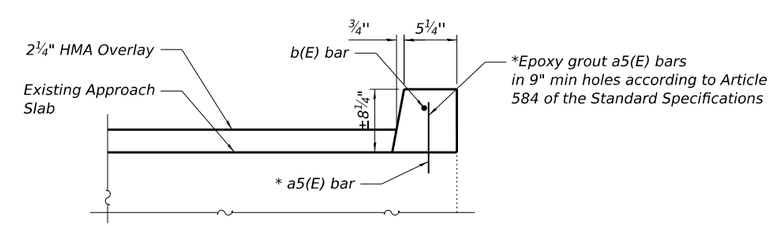

CURB ON APPROACH SLAB DETAIL
SECTION B-B

Notes:

Areas of deck repairs shown are estimated.

The Engineer shall show actual locations and size of deck repairs on As-built Plans.

The location and size of the estimated repairs are based upon deck surveys completed in December of 2024.

Cost of removal and disposal of existing metal pavement reflector housing shall be included with Deck Slab Repair (Partial).

Cost of curb removal on Approach Slab shall be included with Concrete Removal

Cost of curb reconstruction shall be included with Concrete Superstructure.

BILL OF MATERIAL

Bar	No.	Size	Length	Shape
a5(E)	44	#5	1'-3"	
b(E)	4	#4	14'-8"	
Concrete Removal			Cu. Yd.	0.3
Concrete Superstructure			Cu. Yd.	0.8
Protective Coat			Sq. Yd.	6.5
Reinforcement Bars, Epoxy Coated			Pound	130
Deck Slab Repair (Partial)			Sq. Yd.	1

MODEL: $MODELNAME$
FILE NAME: D876E84-0014-0028-SLAB PLAN 01.dgn

Jacobs
525 West Monroe
Suite 1600
Chicago, IL 60661
(312) 251-3000

USER NAME = jacobspw18ics09$	DESIGNED - ERC	REVISED -	
	DRAWN - EAK	REVISED -	
PLOT SCALE = 2.000 ' / in.	CHECKED - CJF	REVISED -	
PLOT DATE = 12/4/2025	DATE - 2025/10/03	REVISED -	

STATE OF ILLINOIS
DEPARTMENT OF TRANSPORTATION

BRIDGE DECK REPAIRS
STRUCTURE NO. 082-0028

SCALE: NTS | SHEET 4 OF 9 SHEETS | STA. | TO STA.

F.A.I. RTE.	SECTION	COUNTY	TOTAL SHEETS	SHEET NO.
70	Section82-(5,6)RS-2, 60-6RS-2	MADISON & ST. CLAIR	678	438

CONTRACT NO. 76E84

ILLINOIS | FED. AID PROJECT

Notes:

Removal and disposal of existing expansion joint systems shall be included with the cost of concrete removal.

The Contractor shall use extreme care during concrete removal so as to not damage the steel beams.

Existing reinforcement bars extending into the removal areas that are not shown shall remain.

Existing reinforcement extending into the removal area shall be cleaned, straightened and incorporated into the new construction. Any existing reinforcement bars intended for reuse and damaged during the concrete removal operations shall be repaired or replaced using an approved bar splicer or anchorage system as approved by the Engineer and at no additional cost. Cost included with Concrete Removal.

The deck surface shall have its final finish tined according to Article 420.09(e)(1) of the Standard Specifications. Cost included with Concrete Superstructure.

Cost of Concrete to be poured on abutment backwall included with Concrete Superstructure.

See Sheet 6 of 9 for Sections Thru Bridge Deck and Abutment Backwall and Bill of Materials.

* See Sheet 7 of 9 for Joint Details.

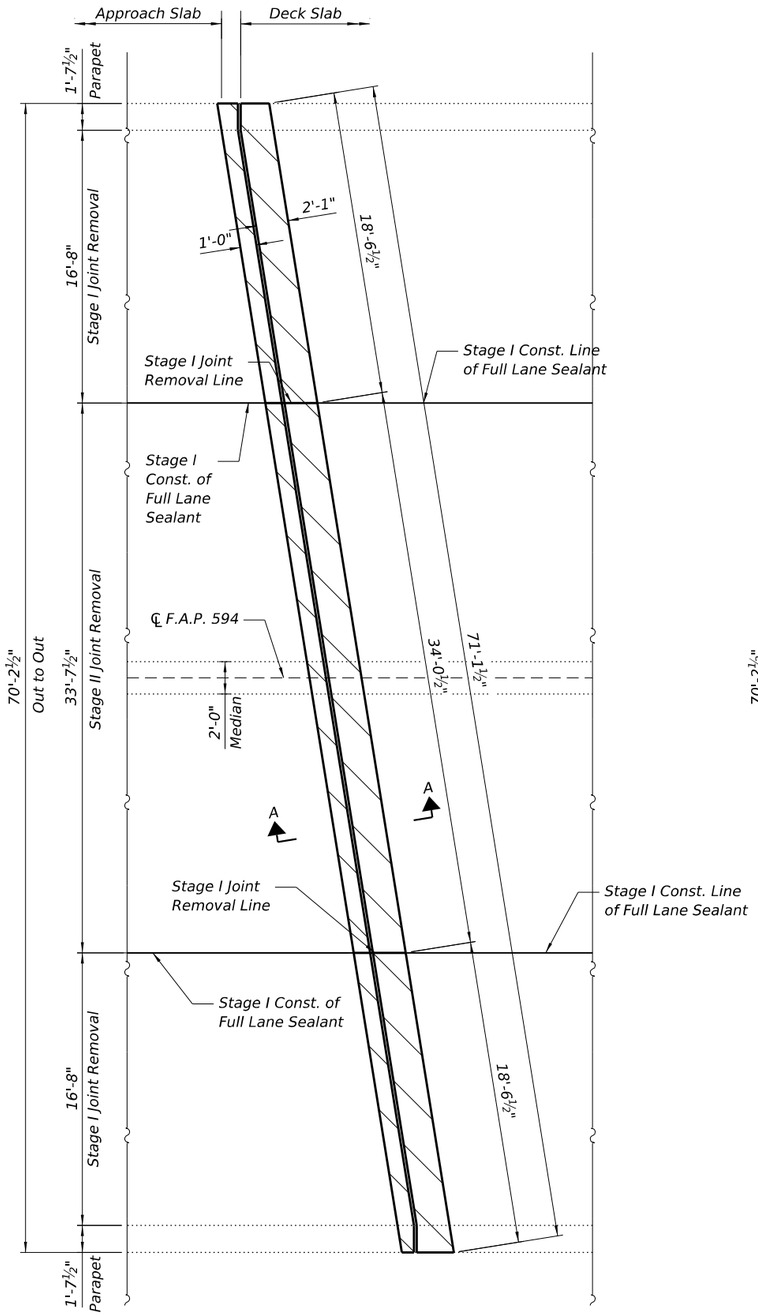

CONCRETE REMOVAL PLAN

(South Abutment shown, North Abutment similar)

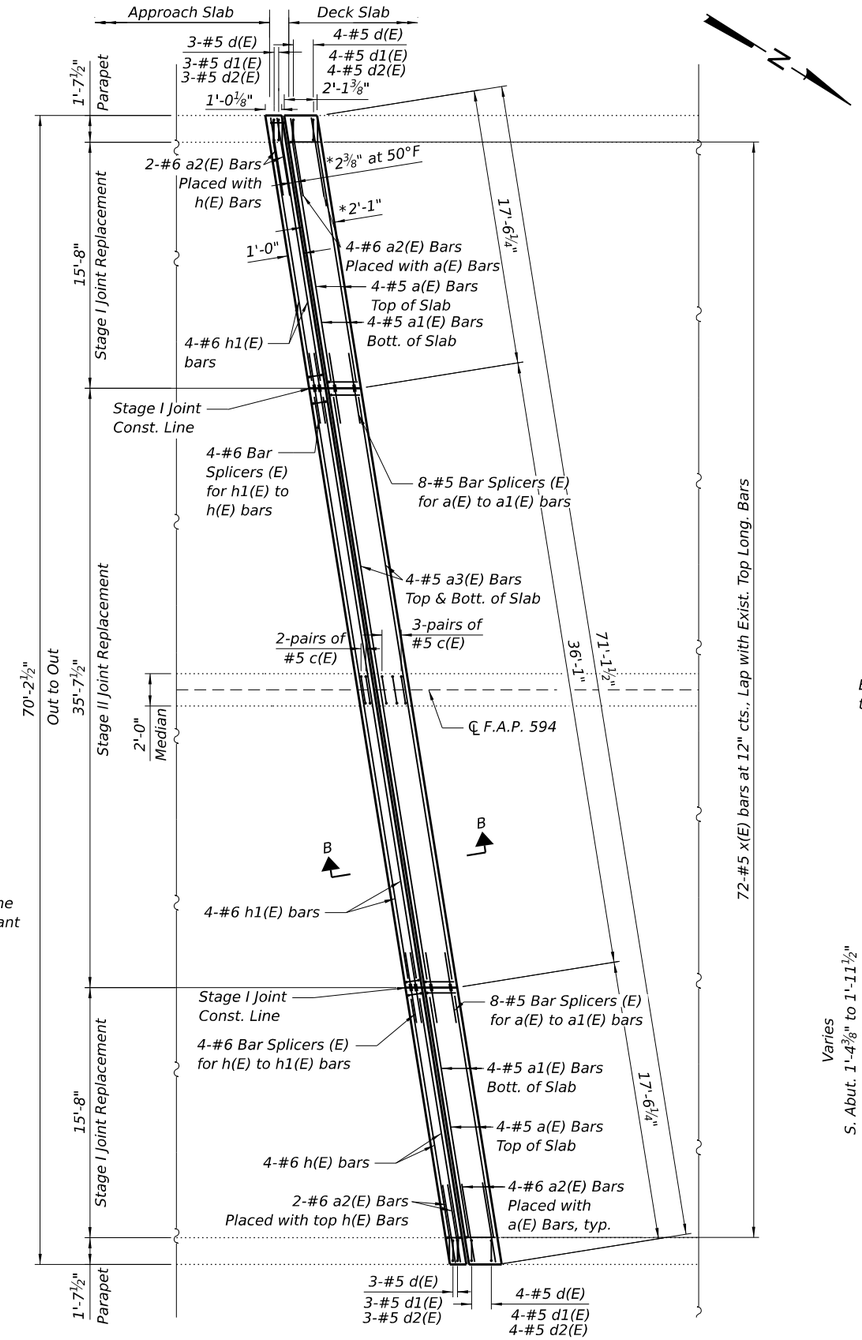

CONCRETE REPLACEMENT PLAN

(South Abutment shown, North Abutment similar)

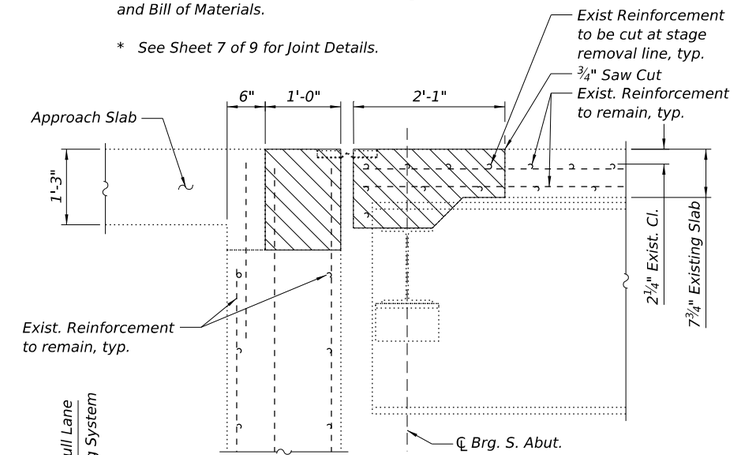

SECTION A-A

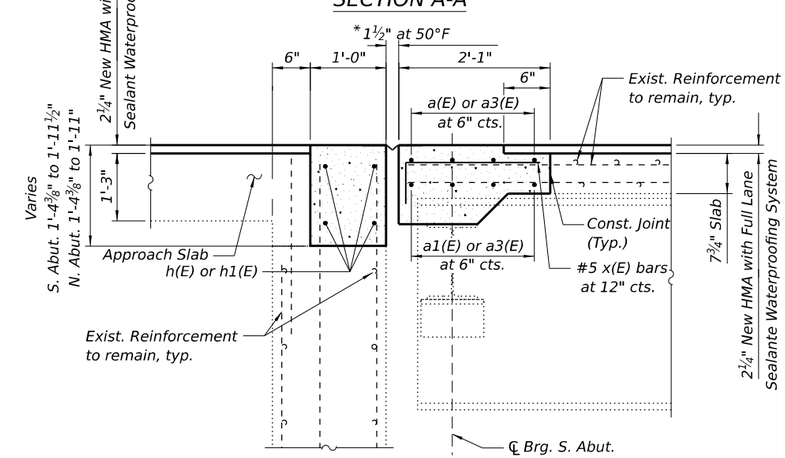

SECTION B-B

LEGEND

Concrete Removal Limits (See notes)

MODEL: $MODELNAMES
FILE NAME: D876E84-005-0028-JOINT DET-I.dgn

Jacobs
525 West Monroe
Suite 1600
Chicago, IL 60661
(312) 251-3000

USER NAME = jacobspw18ics09$	DESIGNED - ERC	REVISED -	
	DRAWN - EAK	REVISED -	
PLOT SCALE = 2.000 ' / in.	CHECKED - CJF	REVISED -	
PLOT DATE = 12/4/2025	DATE - 2025/10/03	REVISED -	

STATE OF ILLINOIS
DEPARTMENT OF TRANSPORTATION

JOINT REMOVAL AND REPLACEMENT DETAILS
STRUCTURE NO. 082-0028

SCALE: NTS | SHEET 5 OF 9 SHEETS | STA. | TO STA.

F.A.I. RTE.	SECTION	COUNTY	TOTAL SHEETS	SHEET NO.
70	Section82-(5,6)RS-2, 60-6RS-2	MADISON & ST. CLAIR	678	439

CONTRACT NO. 76E84

ILLINOIS | FED. AID PROJECT

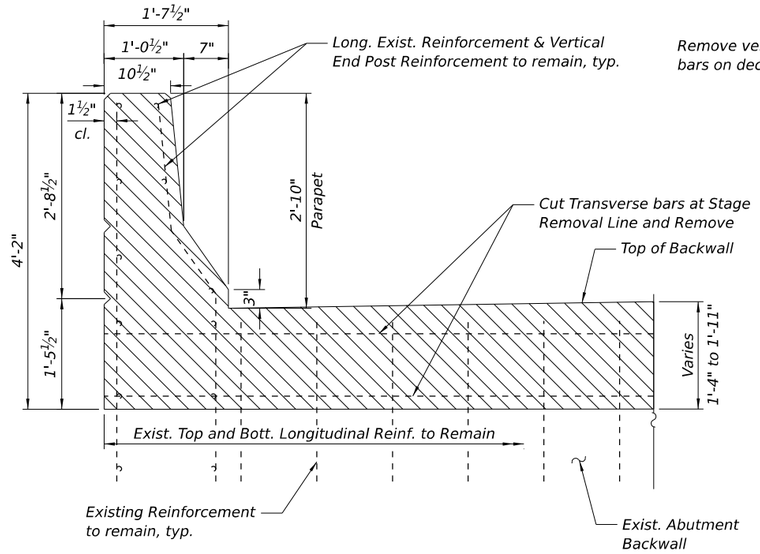

SECTION THRU ABUTMENT BACKWALL REMOVAL

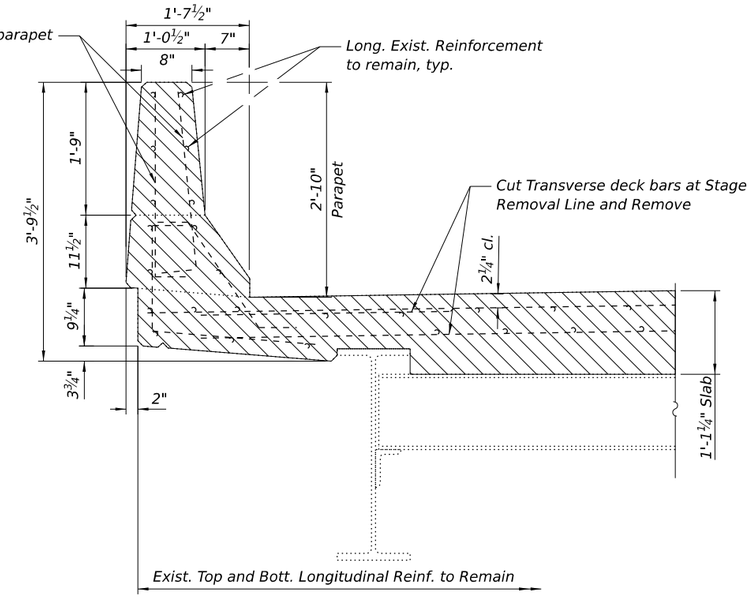

SECTION THRU BRIDGE DECK REMOVAL

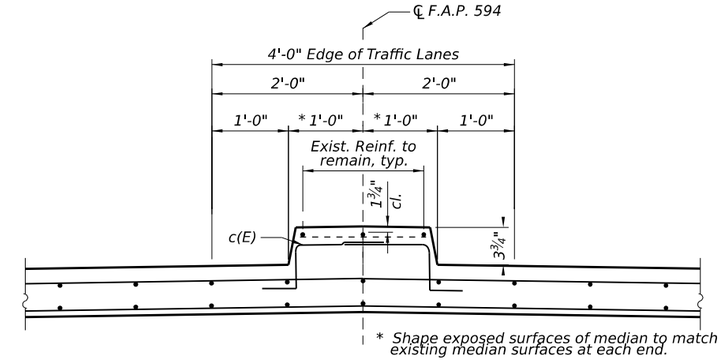

SUPERIMPOSED MEDIAN

(on backwall and deck)

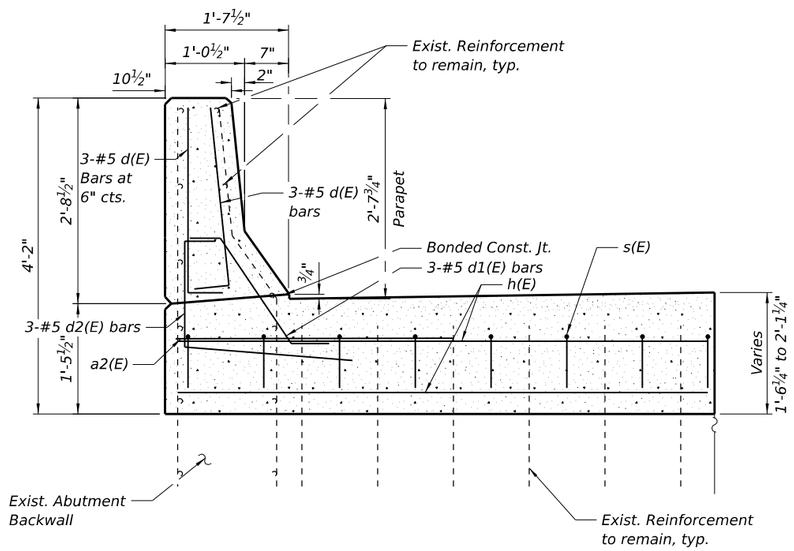

SECTION THRU ABUTMENT BACKWALL REPLACEMENT

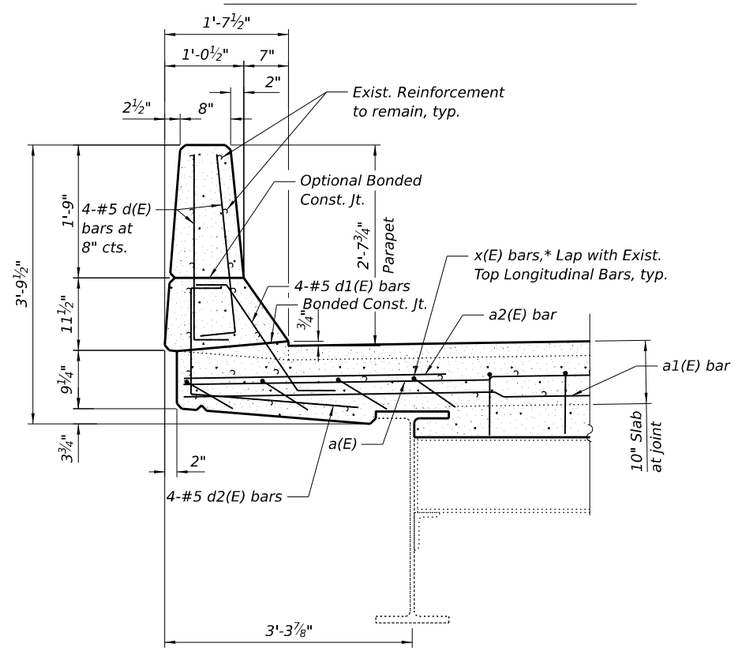

SECTION THRU BRIDGE DECK REPLACEMENT

* Tilt hooks for x(E) bars as required to fit.

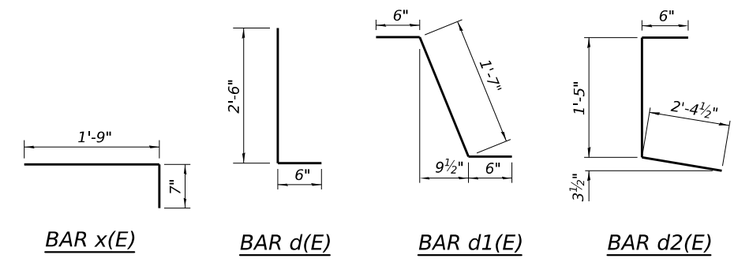

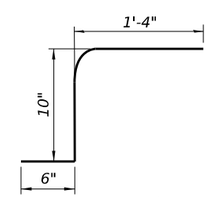

BILL OF MATERIAL FOR TWO JOINTS

Bar	No.	Size	Length	Shape
a(E)	16	#5	17'-3"	
a1(E)	16	#5	16'-7"	
a2(E)	24	#6	4'-0"	
a3(E)	16	#5	35'-10"	
c(E)	20	#5	2'-8"	
d(E)	56	#5	3'-0"	
d1(E)	28	#5	2'-7"	
d2(E)	28	#5	4'-4"	
h(E)	16	#6	17'-3"	
h1(E)	8	#6	35'-10"	
x(E)	144	#5	2'-4"	
Concrete Removal			Cu. Yd.	18.5
Concrete Superstructure			Cu. Yd.	21.3
Protective Coat			Sq. Yd.	13.7
Reinforcement Bars, Epoxy Coated			Pound	2,940

LEGEND

Concrete Removal Limits

MODEL: $MODELNAMES
FILE NAME: D876E84-006-0028-JOINT DET-II.dgn

Jacobs
525 West Monroe
Suite 1600
Chicago, IL 60661
(312) 251-3000

USER NAME = jacobspw18ics09$	DESIGNED - ERC	REVISED -	
	DRAWN - EAK	REVISED -	
PLOT SCALE = 2.000 ' / in.	CHECKED - CJF	REVISED -	
PLOT DATE = 12/4/2025	DATE - 2025/10/03	REVISED -	

STATE OF ILLINOIS
DEPARTMENT OF TRANSPORTATION

JOINT RECONSTRUCTION DETAILS
STRUCTURE NO. 082-0028

SCALE: NTS | SHEET 6 OF 9 SHEETS | STA. | TO STA.

F.A.I. RTE.	SECTION	COUNTY	TOTAL SHEETS	SHEET NO.
70	Section82-(5,6)RS-2, 60-6RS-2	MADISON & ST. CLAIR	678	440

CONTRACT NO. 76E84

ILLINOIS FED. AID PROJECT

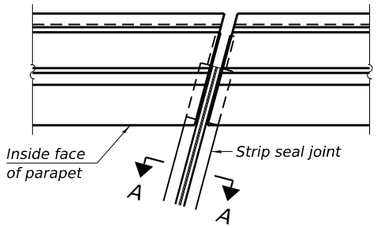

PLAN AT PARAPET

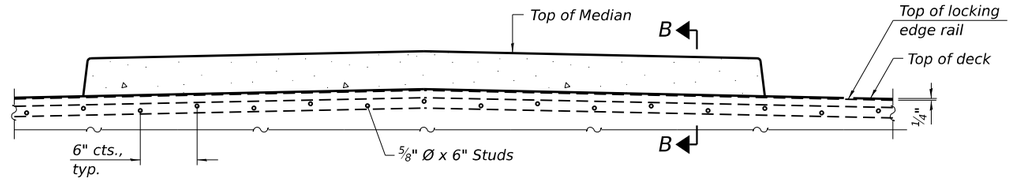

SECTION AT MEDIAN

Notes:

The strip seal shall be made continuous and shall have a minimum thickness of ¼". The configuration of the strip seal shall match the configuration of the locking edge rails. Open or "webbed" strip seal gland configurations are not permitted. The gland shall be sized for a maximum rated movement of 4 inches.

The locking edge rails depicted are configured for typical applications and are conceptual only. The actual configuration of the locking edge rails and matching strip seal may vary from manufacturer to manufacturer provided they fit the application and meet the minimum anchorage shown. Flanged edge rails, however, will not be allowed. Locking edge rails may exceed the 4½" maximum depth provided the anchorage system is revised according to the manufacturer's recommendation.

The manufacturer's recommended installation methods shall be followed.

All steel components shall be galvanized after fabrication according to Article 520.03 of the Standard Specifications.

The Maximum space between locking edge rail segments shall be 3/16" and sealed with a suitable sealant; however, any rail joint within 10' measured perpendicular to the face of the curb or parapet shall be welded as shown in the locking edge rail splice detail.

Cost of embedded plates and anchorage studs included with Preformed Joint Strip Seal.

The concrete opening below the strip seal will vary based on the locking edge rail chosen by the Contractor. Deck and parapet lengths shown elsewhere in the plans are dimensioned to the concrete opening, not the joint opening, and are based on the rolled locking edge rail. If the Contractor elects to use a different locking edge rail, dimensional adjustments may be required.

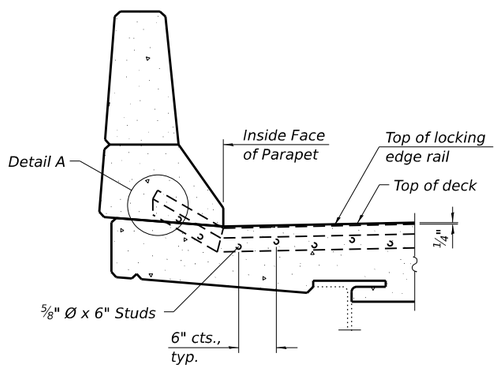

SECTION AT PARAPET

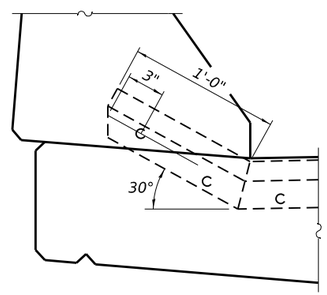

DETAIL A

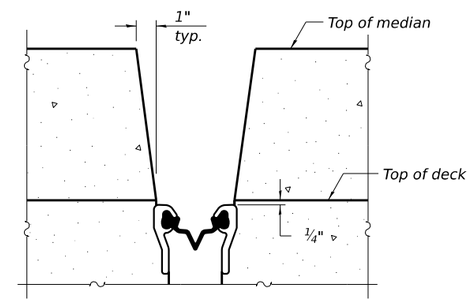

SECTION B-B
(at Rt. ∠'s)

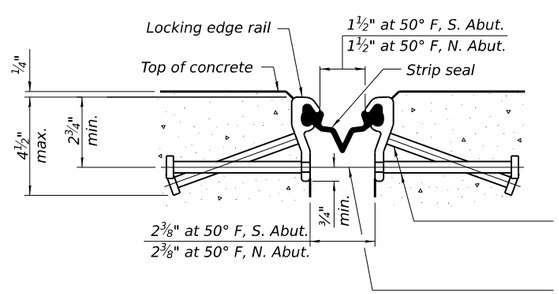

SHOWING ROLLED RAIL JOINT

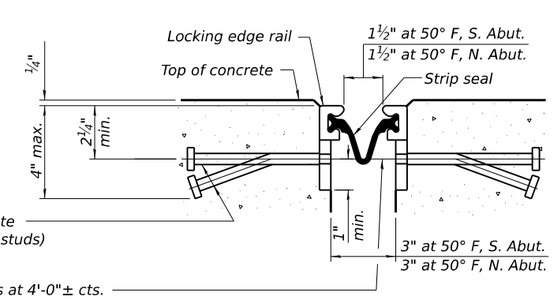

SHOWING WELDED RAIL JOINT

* ⅝" Ø x 6" studs @ 6" cts. (alternate angled/bent studs with horizontal studs)

⅜" Ø threaded rods in 7/16" Ø holes at 4'-0"± cts. for holding the proper joint opening based on the temperature during the deck pour. Place to miss studs. All rods shall be burned, or sawed off flush with the plates after concrete is set.

SECTION A-A

* Granular or solid flux filled headed studs conforming to Article 1006.32 of the Std. Specs., automatically end welded.

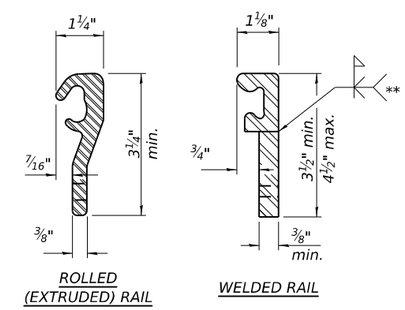

ROLLED
(EXTRUDED) RAIL

WELDED RAIL

LOCKING EDGE RAILS

** Back gouge not required if complete joint penetration is verified by mock-up.

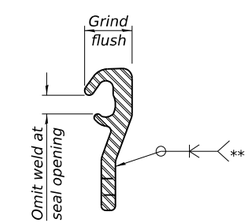

LOCKING EDGE RAIL SPLICE

The inside of the locking edge rail groove shall be free of weld residue. Rolled rail shown, welded rail similar.

BILL OF MATERIAL

Item	Unit	Total
Preformed Joint Strip Seal	Foot	143

MODEL: $MODELNAMES
FILE NAME: D876E84-007-0028-SEAL.dgn

Jacobs
525 West Monroe
Suite 1600
Chicago, IL 60661
(312) 251-3000

USER NAME = jacobspw18lcs11$	DESIGNED - ERC	REVISED -	
	DRAWN - EAK	REVISED -	
PLOT SCALE = 2,000 ' / in.	CHECKED - CJF	REVISED -	
PLOT DATE = 12/4/2025	DATE - 2025/10/03	REVISED -	

STATE OF ILLINOIS
DEPARTMENT OF TRANSPORTATION

PREFORMED JOINT STRIP SEAL
STRUCTURE NO. 082--0028

SCALE: NTS | SHEET 7 OF 9 SHEETS | STA. | TO STA.

F.A.I. RTE.	SECTION	COUNTY	TOTAL SHEETS	SHEET NO.
70	Section82-(5,6)RS-2, 60-6RS-2	MADISON & ST. CLAIR	678	441

CONTRACT NO. 76E84

ILLINOIS | FED. AID PROJECT

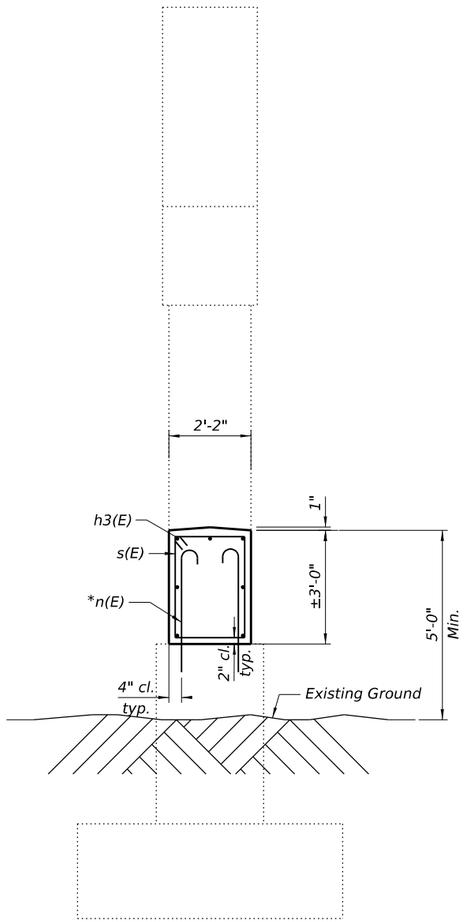

SECTION B-B

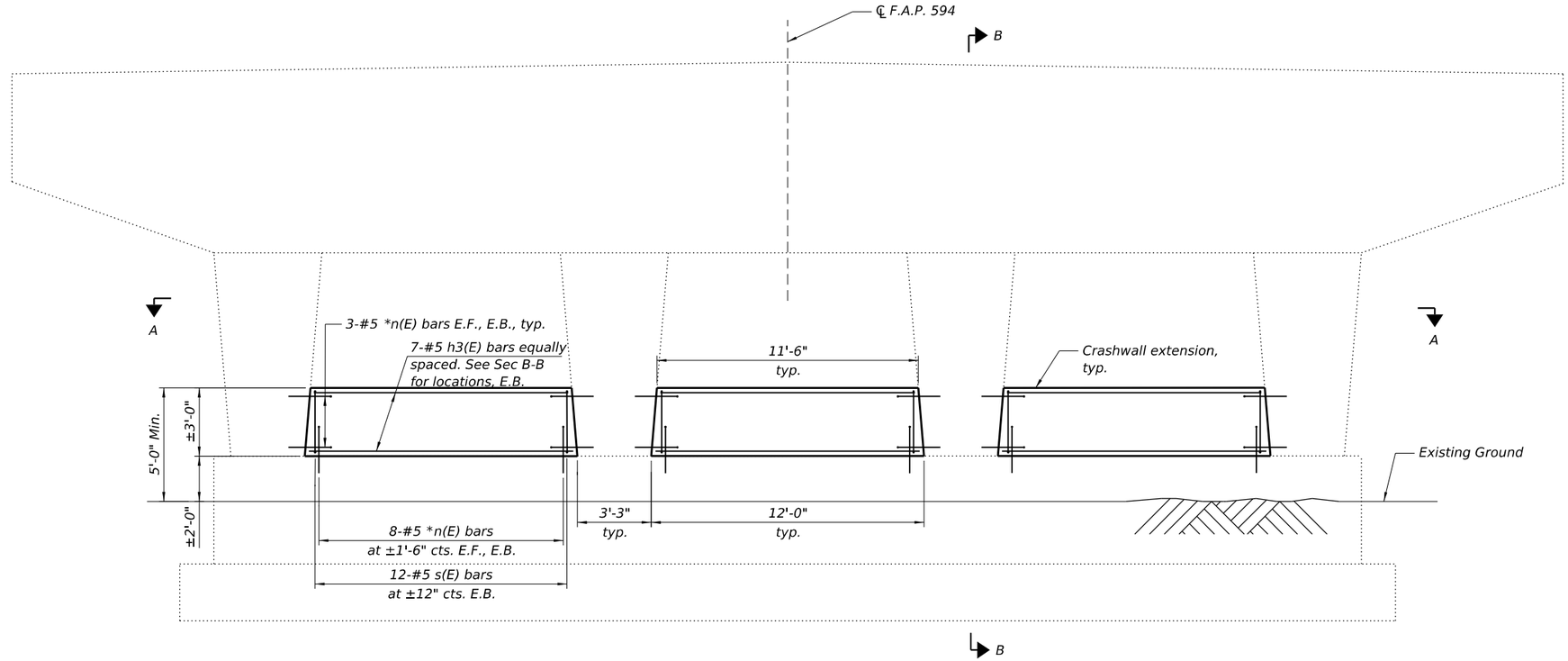

ELEVATION PIERS 1-3

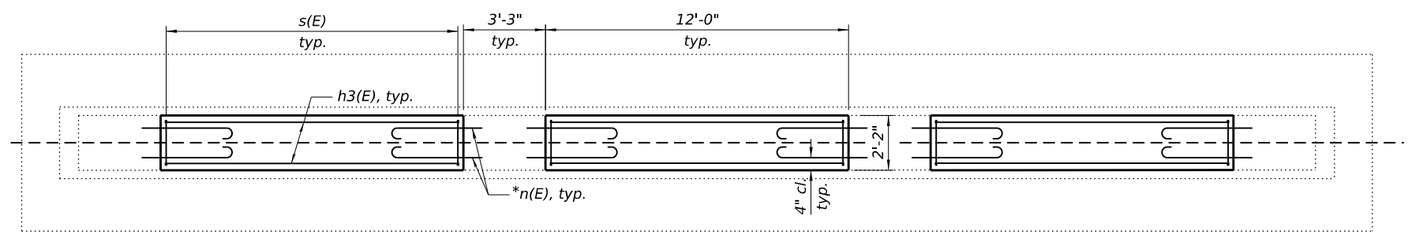

SECTION A-A

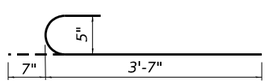

BAR n(E)

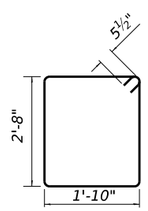

BAR s(E)

Notes:
E.F. indicates each face.
E.B. indicates each bay.
Apply Concrete Sealer to all of the exposed faces of the crashwall extensions.
Existing Piles not shown.

*Epoxy grout n(E) bars in 9" min holes according to Article 584 of the Standard Specifications

BILL OF MATERIAL FOR THREE PIERS

Bar	No.	Size	Length	Shape
h3(E)	63	#5	11'-2"	
n(E)	252	#5	4'-2"	
s(E)	108	#5	9'-11"	
Concrete Structures			Cu. Yd.	26.0
Reinforcement Bars, Epoxy Coated			Pound	2,950
Concrete Sealer			Sq. Ft.	859

MODEL: $MODELNAMES
FILE NAME: D876E84-008-0028-PIER CRASHWALL DET.dgn

Jacobs
525 West Monroe
Suite 1600
Chicago, IL 60661
(312) 251-3000

USER NAME = jacobspw18ics11$	DESIGNED - ERC	REVISED -	
	DRAWN - EAK	REVISED -	
PLOT SCALE = 2.000 ' / in.	CHECKED - CJF	REVISED -	
PLOT DATE = 12/4/2025	DATE - 2025/10/03	REVISED -	

STATE OF ILLINOIS
DEPARTMENT OF TRANSPORTATION

PIER CRASHWALL DETAILS
STRUCTURE NO. 082–0028

SCALE: NTS | SHEET 8 OF 9 SHEETS | STA. | TO STA.

F.A.I. RTE.	SECTION	COUNTY	TOTAL SHEETS	SHEET NO.
70	Section82-(5,6)RS-2, 60-6RS-2	MADISON & ST. CLAIR	678	442

CONTRACT NO. 76E84

ILLINOIS | FED. AID PROJECT

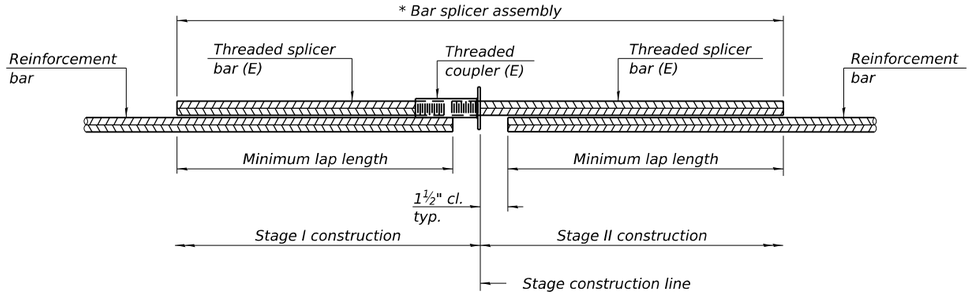

STANDARD BAR SPLICER ASSEMBLY PLAN

Only bar splicer assemblies as presented on the approved QPL list may be used.

Threaded splicer bar length = min. lap length + 1½" + thread length

* Epoxy not required on Bar Splicer Assembly components used in conjunction with black bars.

Location	Bar size	No. assemblies required	Minimum lap length
S. End of Deck	#5	16	3'-10"
S. Abut. Backwall	#6	8	5'-6"
N. End of Deck	#5	16	3'-10"
N. Abut. Backwall	#6	8	5'-6"

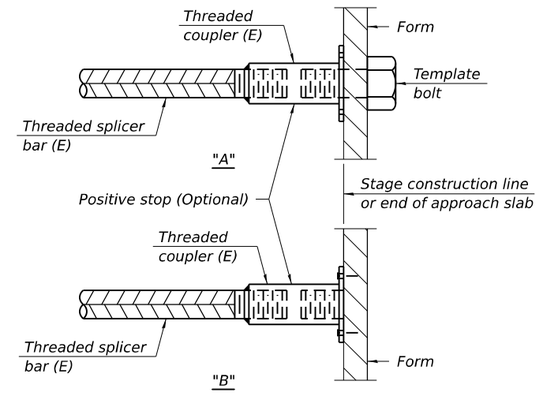

INSTALLATION AND SETTING METHODS

"A" : Set bar splicer assembly by means of a template bolt.
"B" : Set bar splicer assembly by nailing to wood forms or cementing to steel forms.
(E) : Indicates epoxy coating.

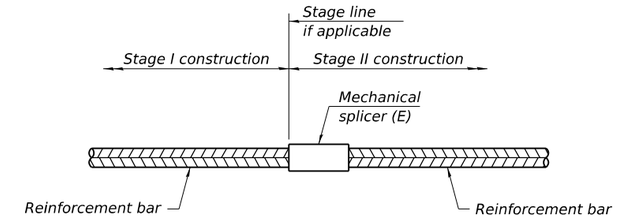

STANDARD MECHANICAL SPLICER

Location	Bar size	No. assemblies required

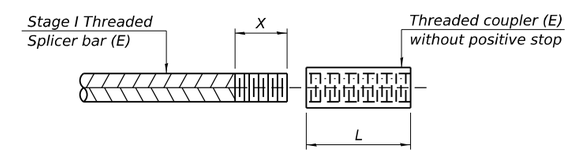

THREADING OF ASSEMBLIES

The threaded length "X" shall be no more than L/2. The bar should be tightened until 0-1 thread(s) is/are exposed.

Notes:
Splicer bars shall be deformed with threaded ends and have a minimum 60 ksi yield strength.
All reinforcement shall be lapped and tied to the splicer bars.
Bar splicer assemblies shall be epoxy coated according to the requirements for reinforcement bars. See Section 508 of the Standard Specifications.
See approved list of bar splicer assemblies and mechanical splicers for alternatives.

BSD-1 4-4-2025

MODEL: $MODELNAME$
FILE NAME: D876E84-009-0028-SPLICE.dgn

Jacobs
525 West Monroe
Suite 1600
Chicago, IL 60661
(312) 251-3000

USER NAME = jacobspw18lcs10$	DESIGNED - ERC	REVISED -	
	DRAWN - EAK	REVISED -	
PLOT SCALE = 2.000 ' / in.	CHECKED - CJF	REVISED -	
PLOT DATE = 12/4/2025	DATE - 2025/10/03	REVISED -	

STATE OF ILLINOIS
DEPARTMENT OF TRANSPORTATION

BAR SPLICER ASSEMBLY AND MECHANICAL SPLICER DETAILS
STRUCTURE NO. 082-0028

SCALE: NTS | SHEET 9 OF 9 SHEETS | STA. | TO STA.

F.A.I. RTE.	SECTION	COUNTY	TOTAL SHEETS	SHEET NO.
70	Section82-(5,6)RS-2, 60-6RS-2	MADISON & ST. CLAIR	678	443
		CONTRACT NO. 76E84		
		ILLINOIS	FED. AID PROJECT	

Benchmark: Cut "X" on fire hydrant bolt at south side of intersection of IL 203 and Collinsville Rd. ELEV. 407.50'

Existing Structure: Structure Number 082-0029 was originally built in 1959 under project Section 581-B carrying F.A.U. Route 4 connector over Drainage Canal. The existing structure consist of three continuous spans. The structure is 91'-8¾" back-to-back abutments. The superstructure is a non-composite concrete deck with steel WF beams supported by concrete pile bent piers and concrete stub abutments. The structure has 66'-0" out to out width. The existing bridge deck and steel beams are straight carrying a curved roadway alignment. The supstructure was replaced in 1993. The bridge does not contain lead paint.

Traffic Control: Traffic is to be maintained using stage construction.

No Salvage

DESIGN STRESSES

FIELD UNITS (New Const.)

f'c = 4,000 psi (Superstructure)
fy = 60,000 psi (Reinforcement)

FIELD UNITS (Exist. Const.)

f'c = 3,500 psi (Superstructure)
f'c = 3,500 psi (Substructure)
fy = 40,000 psi (Reinforcement)
fy = 36,000 psi (Structural Steel)

SCOPE OF WORK

1. Remove and replace bridge decks and add shear studs to existing beams to make them composite.
2. Remove approach pavements including removal of buried pile bent caps and replace with bridge approach slabs.
3. Remove abutment backwalls and convert to semi-integral abutments, while providing new drainage system behind abutments.
4. Remove and reconfigure wingwalls for construction of new approach slabs. Rebuild concrete slope walls around newly configured wingwalls.
5. Formed concrete repairs on piers.
6. Remove end diaphragms and clean and paint beam ends.
7. Remove and replace existing approach guardrail terminals.
8. Remove and replace guardrail end terminals.
9. Remove abandoned utility conduit on parapet.
10. Remove and re-attach existing utility conduit to beam 1.

LOADING HL-93

Allow 25#/sq. ft. for future wearing surface.

SEISMIC DATA

Seismic Retrofit Category (SRC) = B
Design Spectral Acceleration at 1.0 sec. (SD1) = 0.226g
Design Spectral Acceleration at 0.2 sec. (SDS) = 0.439g
Soil Site Class = D
Performance Level (PL) = PL 1

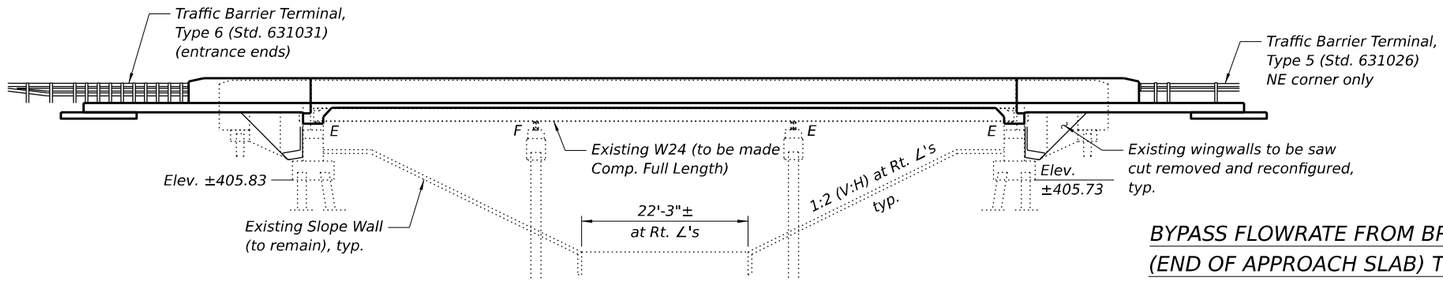

ELEVATION

BYPASS FLOWRATE FROM BRIDGE LIMITS (END OF APPROACH SLAB) TO ROADWAY

	NW Curbline	SW Curbline	NE Curbline	SE Curbline
Q (C.F.S.) SN 082-0029	0	0.042	0	0

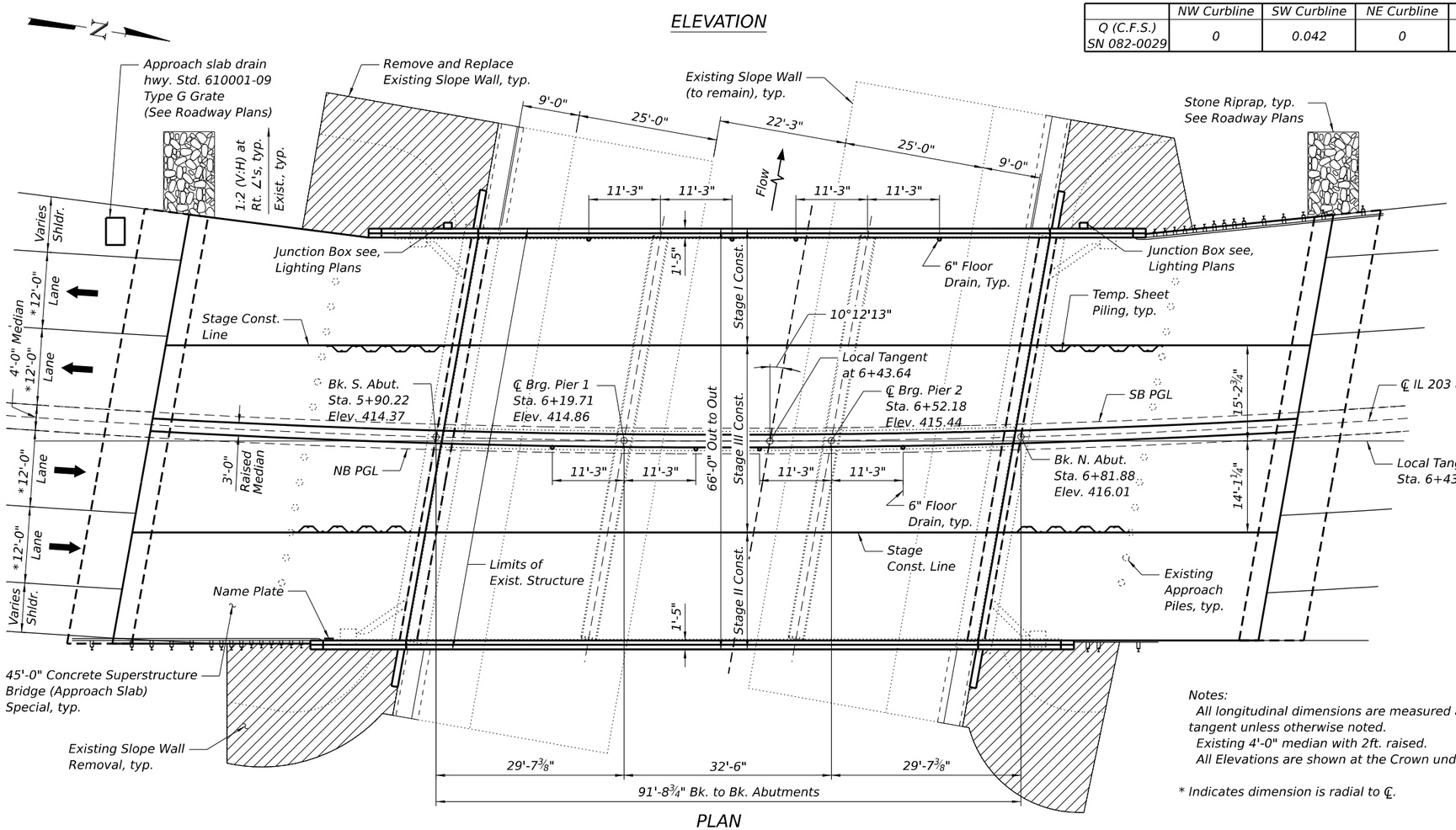

PLAN

Notes:
All longitudinal dimensions are measured along the local tangent unless otherwise noted.
Existing 4'-0" median with 2ft. raised.
All Elevations are shown at the Crown under the raised median.

* Indicates dimension is radial to ℄.

LICENSED STRUCTURAL ENGINEER
CHADWICK J. FUESTING
081-005834
STATE OF ILLINOIS

Chad Fuesting
EXPIRES: 11/30/2026
DATE: 12/04/2025

APPROVED
For Structural Adequacy Only
Engineer of Bridges & Structures

DESIGN SPECIFICATIONS

2024 AASHTO LRFD Bridge Design Specifications, 10th Edition (New Construction)

(Existing Construction)
2002 AASHTO Standard Specifications for Highway Bridges, 17th Edition

2006 Seismic Retrofitting Manual for Highway Structures Part 1 Bridges (FHWA-HRT-06-032))

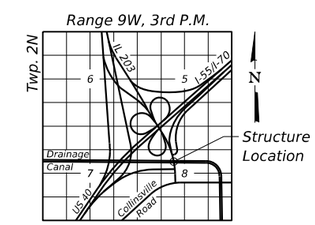

LOCATION SKETCH

GENERAL PLAN AND ELEVATION
IL 203 OVER DRAINAGE
TO CAHOKIA CANAL
F.A.I. 70 - SEC. 82-(5,6)RS-2
MADISON & ST. CLAIR COUNTY
STATION 6+43.64
STRUCTURE NO. 082-0029

MODEL: $MODELNAMES
FILE NAME: D876E84-001-0029-GPE.dgn

Jacobs
525 West Monroe
Suite 1600
Chicago, IL 60661
(312) 251-3000

USER NAME = jacobspw18ics10$	DESIGNED - CJF	REVISED -	
	DRAWN - EAK	REVISED -	
PLOT SCALE = 0.16666667 ' / in.	CHECKED - ED	REVISED -	
PLOT DATE = 12/4/2025	DATE - 2025/10/03	REVISED -	

STATE OF ILLINOIS
DEPARTMENT OF TRANSPORTATION

GENERAL PLAN & ELEVATION
STRUCTURE NO. 082–0029

SCALE: NTS | SHEET 1 OF 28 SHEETS | STA. | TO STA.

F.A.I. RTE.	SECTION	COUNTY	TOTAL SHEETS	SHEET NO.
70	Section82-(5,6)RS-2, 60-6RS-2	MADISON & ST. CLAIR	678	444

CONTRACT NO. 76E84
ILLINOIS | FED. AID PROJECT

GENERAL NOTES

No field welding is permitted except as specified in the contract documents.
Reinforcement bars designated (E) shall be epoxy coated.

The finishing machine rails shall be placed on the top of the top flange of the exterior beams within the deck pour. Beam blocks shall be placed between beams at all tie locations in each bay for the full width of the deck pour.

Prior to pouring the new concrete deck, all heavy or loose rust, loose mill scale, and other loose detrimental foreign material shall be removed from the surfaces in contact with concrete (SSPC – SP3 standards). Tightly adhered paint may remain unless otherwise noted. Removal shall be accomplished by methods that will not damage the steel and the cost will be paid for according to Article 109.04 of the Standard Specifications.

As directed by the Engineer, existing construction accessories welded to the top flange of beams and girders shall be removed. The weld areas shall be ground flush and inspected for cracks using magnetic particle testing (MT) or dye penetrant testing (PT) by qualified personnel approved by the Engineer. Any cracks that cannot be removed by grinding ¼ in. deep shall be identified and reported to the Bureau of Bridges & Structures for further disposition. The cost of removing welded accessories, grinding and inspecting weld areas and grinding cracks will be paid for according to Article 109.04 of the Standard Specifications.

Plan dimensions and details relative to the existing structure have been taken from existing plans are subject to nominal construction variations. The Contactor shall field verify existing dimensions and details affecting new construction and make necessary approved adjustments prior to construction or ordering of materials. Such variations shall not be cause for additional compensation for a change in scope of the work, however, the Contractor will be paid for the quantity actually furnished at the unit price bid for the work.

Cleaning and painting of the existing structural steel shall be as specified in the special provision for "Cleaning and Painting Existing Steel Structures". All beams, bearings and other structural steel within 5 ft (measured along the beam) from the beam ends shall be cleaned per Near White Blast Cleaning – SSPC- SP10.

The designated areas cleaned per Near White Blast Cleaning shall be painted according to the requirements of Organic Zinc-Rich Primer/Epoxy Intermediate Coat/Urethane Topcoat (OZ/E/U). The color of the final finish coat for all interior steel surfaces shall be Interstate Green, Munsell No. 7.5 G 4/8.

Containment of cleaning residue is required to control nuisance dust. See special provisions.

SSPC QP1 Contractor Certification is required for this Contract.

Layout of the slope protection system may be varied to suit ground conditions in the field as directed by the Engineer.

INDEX OF SHEETS

1	General Plan & Elevation
2	General Data
3	Section Thru Abut., Temp. Sheet Piling & Appr. Slab Removal
4	Stage Construction Details
5	Temporary Concrete Barrier
6	Top of Slab Elevations Layout
7-8	Top of Slab Elevations
9-10	Top of Approach Slab Elevations
11	Superstructure
12	Superstructure Details I
13	Superstructure Details II
14	South Diaphragm Details
15	North Diaphragm Details
16-17	Bridge Approach Slab Special Details
18	Structural Steel
19	Structural Steel Details
20	South Abutment Removal Details
21	North Abutment Removal Details
22	South Abutment Details
23	North Abutment Details
24	Existing Slope Wall Removal
25	Slope Wall Replacement
26	Pier 1 and Pier 2 Repair Details
27	Bar Splicer Assembly and Mechanical Splicer Details
28	Concrete Parapet Slipforming Option

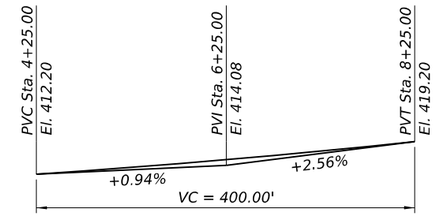

PROFILE GRADE

(Along SB edge of Median for IL 203)

TOTAL BILL OF MATERIAL

ITEM	UNIT	SUPER	SUB	TOTAL
Concrete Removal	Cu. Yd.	-	42.6	42.6
Slope Wall Removal	Sq. Yd.	-	262	262
Removal of Existing Concrete Deck No. 4	Each	1	-	1
Structure Excavation	Cu. Yd.	-	617	617
Floor Drains	Each	8	-	8
Concrete Structures	Cu. Yd.	-	56.3	56.3
Concrete Superstructure	Cu. Yd.	166.8	-	166.8
Bridge Deck Grooving	Sq. Yd.	1,296	-	1,296
Protective Coat	Sq. Yd.	1,459	-	1,459
Stud Shear Connectors	Each	4,410	-	4,410
Reinforcement Bars, Epoxy Coated	Pound	170,180	4,340	174,520
Bar Splicers	Each	1,386	-	1,386
Slope Wall 6 Inch	Sq. Yd.	-	102	102
Name Plates	Each	1	-	1
Temporary Sheet Piling	Sq. Ft.	-	281	281
Granular Backfill for Structures	Cu. Yd.	-	617	617
Geocomposite Wall Drain	Sq. Yd.	-	186	186
Pipe Underdrains for Structures 4"	Foot	-	245	245
Concrete Superstructure (Approach Slab), Special	Cu. Yd.	333.1	-	333.1
Concrete Removal (Special)	Cu. Yd.	-	8.0	8.0
Structural Steel Removal	Pound	5,080	-	5,080
Containment and Disposal of Non-Lead Paint Cleaning Residues No. 4	L. Sum	1	-	1
Bar Terminators	Each	132	-	132
Cleaning and Painting Steel Bridge No. 4	L. Sum	1	-	1
Structural Repair of Concrete (Depth Equal to or Less Than 5 inches)	Sq. Ft.	-	18	18
Approach Slab Removal	Sq. Yd.	286	-	286

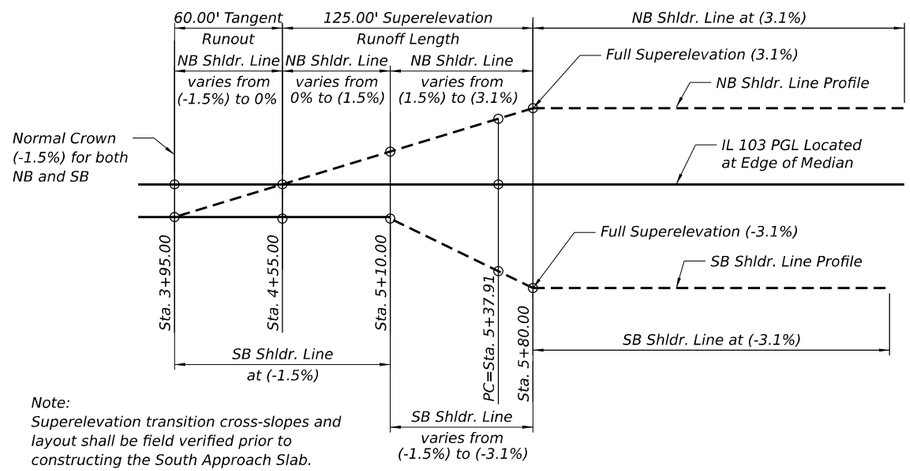

Note:
Superelevation transition cross-slopes and layout shall be field verified prior to constructing the South Approach Slab.

SUPERELEVATION TRANSITION

STA. 6+43.64
RE-BUILT 202_ BY
STATE OF ILLINOIS
F.A.U. 9213 SEC. 82-5B-1
LOADING HL-93
STR. NO. 082-0029

NAME PLATE

See Std. 515001

Existing Name Plate shall be cleaned and relocated next to new Name Plate. Cost included with Name Plate.

CURVE DATA

(℄ IL 203)

P.I. Sta. = 9+12.03
Δ = 26°20'49"
D = 3°35'06"
R = 1598.36'
T = 374.12'
L = 735.00'
E = 43.20'
SE = 3.1%
P.C. Sta. = 5+37.91
P.T. Sta. = 12+72.91

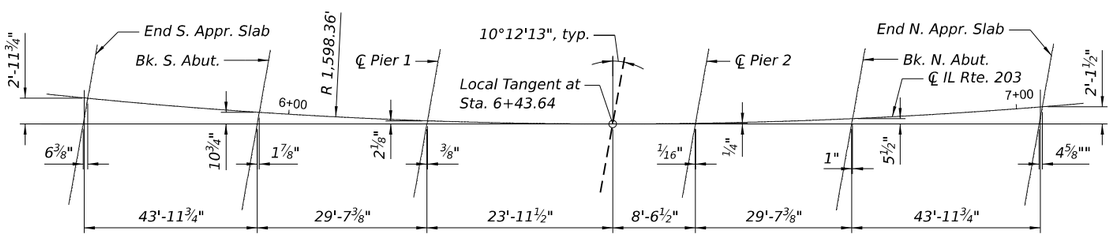

OFFSET SKETCH

Note:
All drainage system components shall extend to 2'-0" from end of each wingwall except an outlet pipe shall extend until intersecting with the side slopes. The pipes shall drain into concrete headwalls. (See Article 601.05 of the Standard Specifications and Highway Standard 601101).

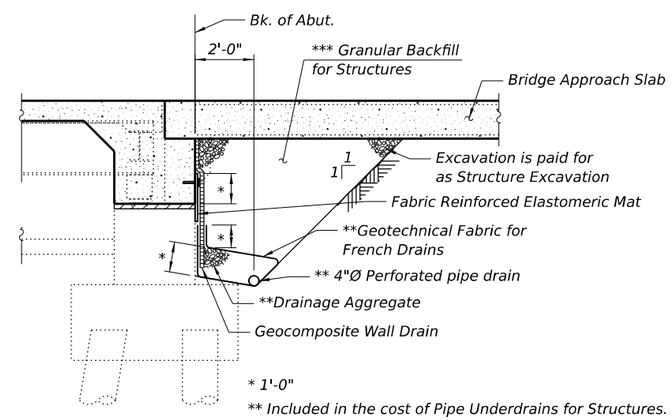

* 1'-0"

** Included in the cost of Pipe Underdrains for Structures.

*** Granular Backfill behind abutments shall be compacted according to Article 205.06 of the Standard Specifications. No compaction is allowed 2'-0" behind the Back of Abutment.

SECTION THRU SEMI-INTEGRAL ABUTMENT

(Horizontal dimensions at right angles)
(North Abutment shown; South Abutment similar)

MODEL: $MODELNAMES
FILE NAME: D876E84-002-0029-GENERAL.dgn

Jacobs
525 West Monroe
Suite 1600
Chicago, IL 60661
(312) 251-3000

USER NAME = jacobspw18ics09$	DESIGNED - CJF	REVISED -	
	DRAWN - EAK	REVISED -	
PLOT SCALE = 0.16666667 ' / in.	CHECKED - ED	REVISED -	
PLOT DATE = 12/4/2025	DATE - 2025/10/03	REVISED -	

STATE OF ILLINOIS
DEPARTMENT OF TRANSPORTATION

GENERAL DATA
STRUCTURE NO. 082–0029

SCALE: NTS | SHEET 2 OF 28 SHEETS | STA. | TO STA.

F.A.I. RTE.	SECTION	COUNTY	TOTAL SHEETS	SHEET NO.
70	Section82-(5,6)RS-2, 60-6RS-2	MADISON & ST. CLAIR	678	445

CONTRACT NO. 76E84

ILLINOIS | FED. AID PROJECT

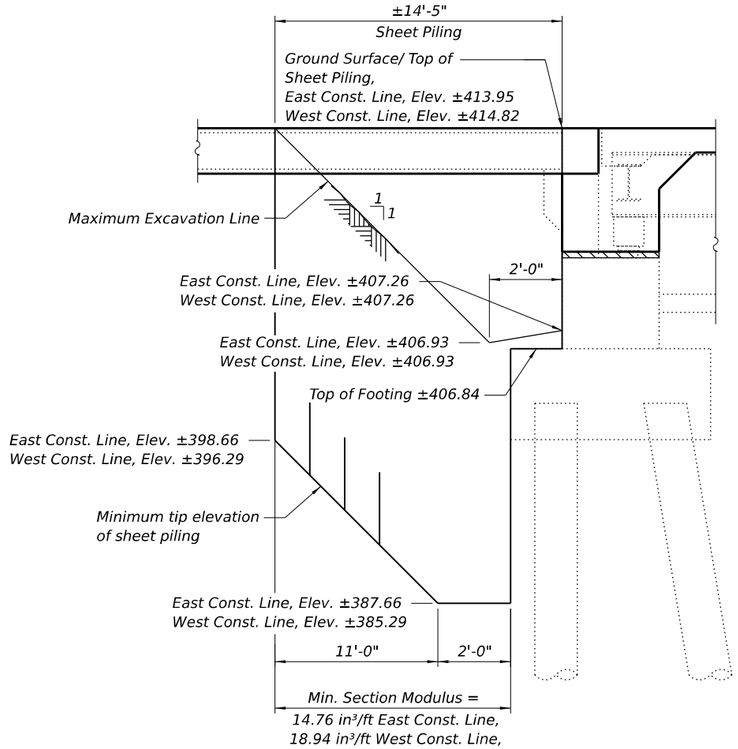

SOUTH ABUTMENT EAST AND WEST
CONSTRUCTION LINE TEMPORARY SHEET PILING

(Looking West)

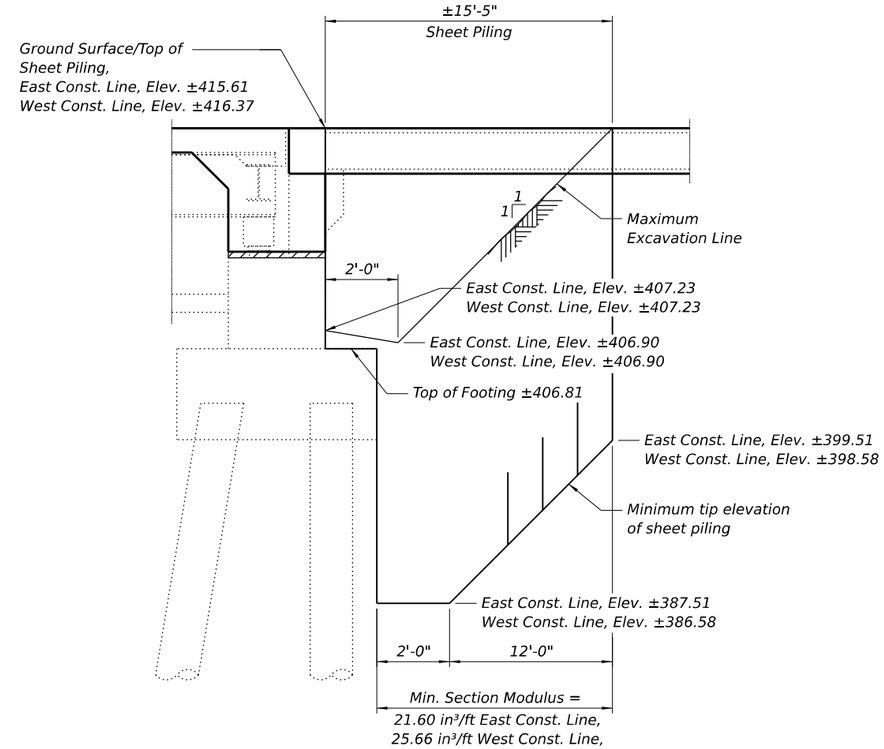

NORTH ABUTMENT EAST AND WEST
CONSTRUCTION LINE TEMPORARY SHEET PILING

(Looking West)

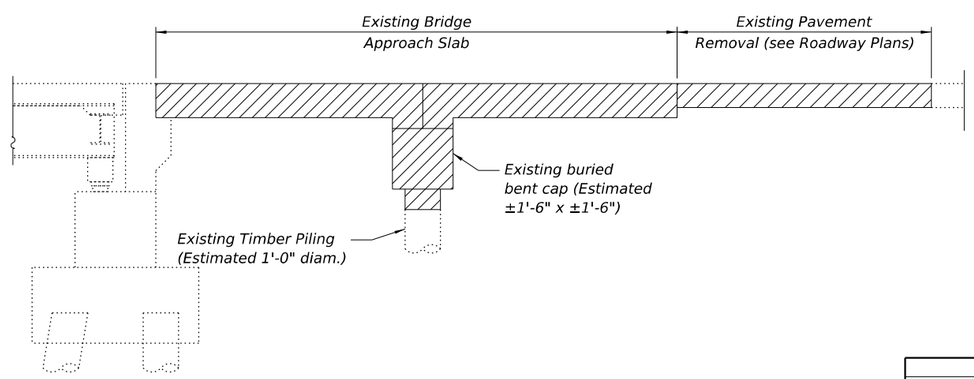

APPROACH SLAB REMOVAL

Removal of the existing approach slab shall be paid for as Approach Slab Removal. The removal of the existing buried bent cap shall include removal of the top 2'-0" of existing piling and shall be paid for as Concrete Removal (Special).

BILL OF MATERIAL

ITEM	UNIT	TOTAL
Temporary Sheet Piling	Sq. Ft.	281
Granular Backfill for Structures	Cu. Yd.	617
Geocomposite Wall Drain	Sq. Yd.	186
Pipe Underdrains for Structures 4"	Foot	245
Approach Slab Removal	Sq. Yd.	286

Notes:
If the Contractor chooses to alter the temporary cantilevered sheet piling design requirements shown on the plans, a design submittal including plan details and calculations will be required for review and acceptance by the Engineer.
The Contractor shall connect the first sheet to the existing abutment wall to ensure stability of sheets driven to the top of the existing footing. This connection shall be reviewed and accepted by the Engineer and included in the cost for Temporary Sheet Piling.

MODEL: $MODELNAMES
FILE NAME: D876E84-003-0029-TEMPSHTPILING.dgn

Jacobs
525 West Monroe
Suite 1600
Chicago, IL 60661
(312) 251-3000

USER NAME = jacobspw18ics09$	DESIGNED - CJF	REVISED -	
	DRAWN - EAK	REVISED -	
PLOT SCALE = 0.16666667 ' / in.	CHECKED - ED	REVISED -	
PLOT DATE = 12/4/2025	DATE - 2025/10/03	REVISED -	

STATE OF ILLINOIS
DEPARTMENT OF TRANSPORTATION

SECTION THRU. ABUT., TEMP. SHEET PILING, & APPR. SLAB REMOVAL
STRUCTURE NO. 082-0029

SCALE: NTS | SHEET 3 OF 28 SHEETS | STA. | TO STA.

F.A.I. RTE.	SECTION	COUNTY	TOTAL SHEETS	SHEET NO.
70	Section82-(5,6)RS-2, 60-6RS-2	MADISON & ST. CLAIR	678	446

CONTRACT NO. 76E84
ILLINOIS | FED. AID PROJECT

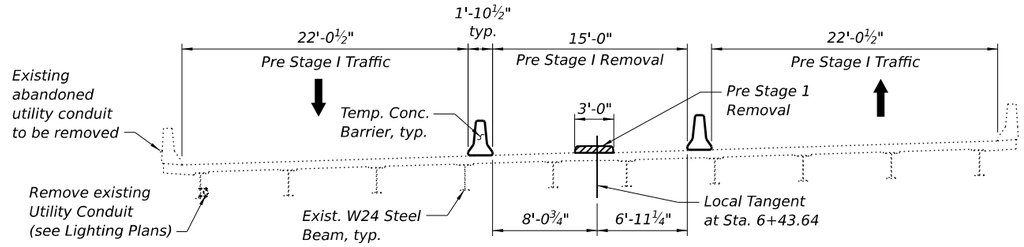

PRE STAGE I REMOVAL AND TRAFFIC

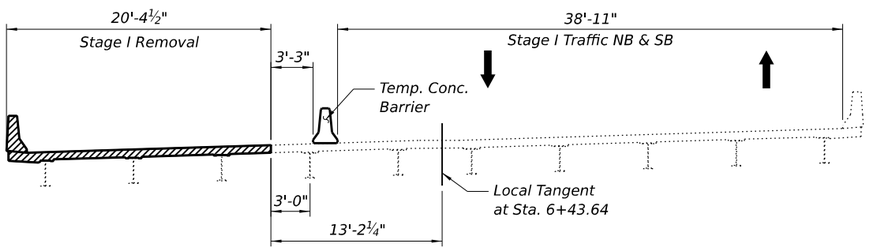

STAGE I TRAFFIC AND REMOVAL

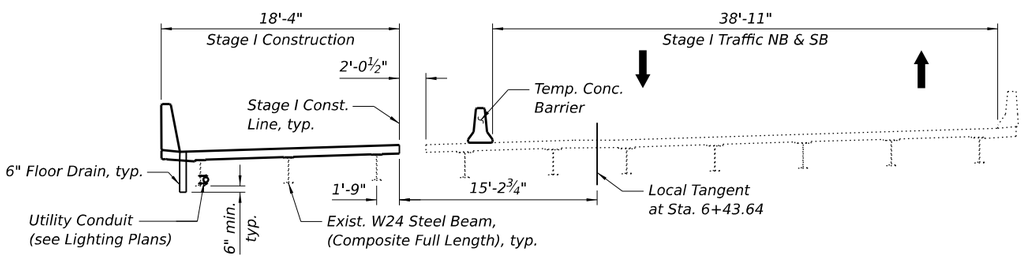

STAGE I TRAFFIC AND CONSTRUCTION

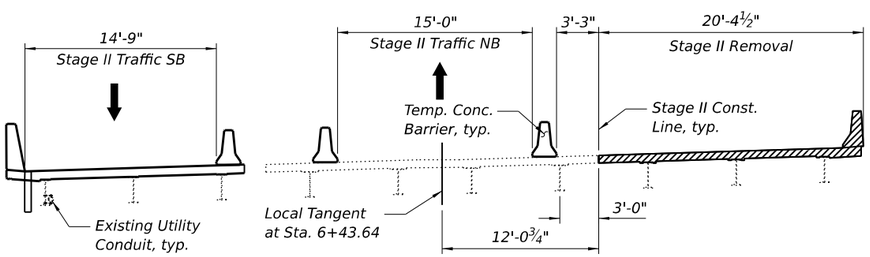

STAGE II TRAFFIC AND REMOVAL

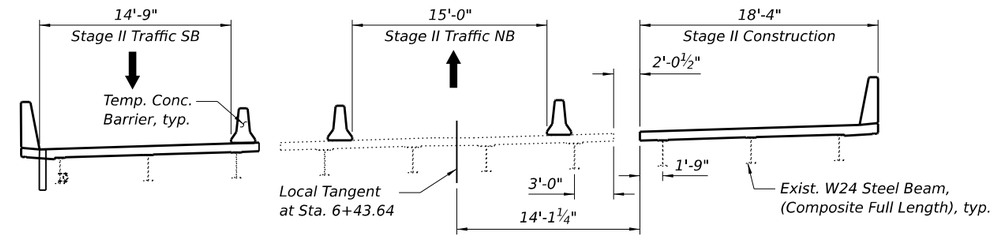

STAGE II TRAFFIC AND CONSTRUCTION

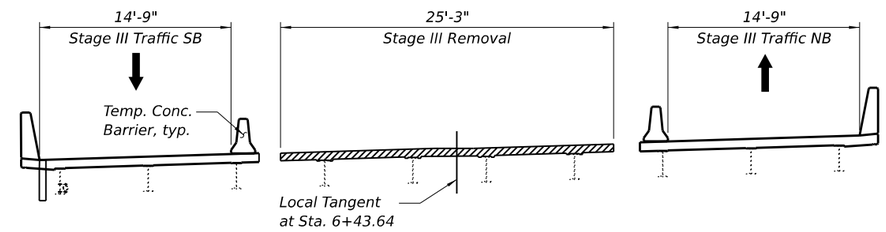

STAGE III TRAFFIC AND REMOVAL

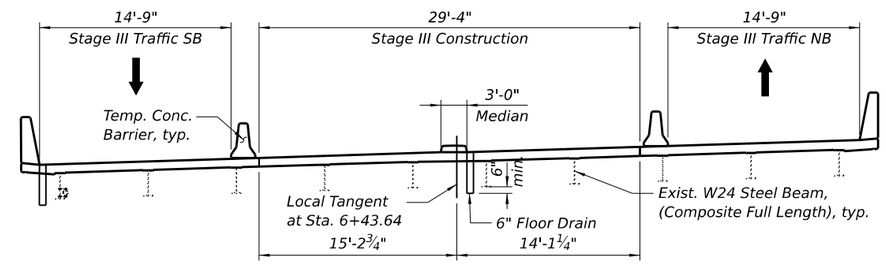

STAGE III TRAFFIC AND CONSTRUCTION

Notes:

Hatch represents limits of Removal.

All sections are looking north.

All transverse dimensions are at right angles to the local tangent, unless noted otherwise.

See Offset Sketch on Sheet 2 of 28 for offsets between tangent lines and ℄ or PG's.

MODEL: $MODELNAMES
FILE NAME: D876E84-004-0029-STAGE.dgn

Jacobs
525 West Monroe
Suite 1600
Chicago, IL 60661
(312) 251-3000

USER NAME = jacobspw18ics09$	DESIGNED - CJF	REVISED -	
	DRAWN - EAK	REVISED -	
PLOT SCALE = 0.16666667 ' / in.	CHECKED - ED	REVISED -	
PLOT DATE = 12/4/2025	DATE - 2025/10/03	REVISED -	

STATE OF ILLINOIS
DEPARTMENT OF TRANSPORTATION

STAGE CONSTRUCTION DETAILS
STRUCTURE NO. 082-0029

SCALE: NTS | SHEET 4 OF 28 SHEETS | STA. | TO STA.

F.A.I. RTE.	SECTION	COUNTY	TOTAL SHEETS	SHEET NO.
70	Section82-(5,6)RS-2, 60-6RS-2	MADISON & ST. CLAIR	678	447

CONTRACT NO. 76E84

ILLINOIS | FED. AID PROJECT

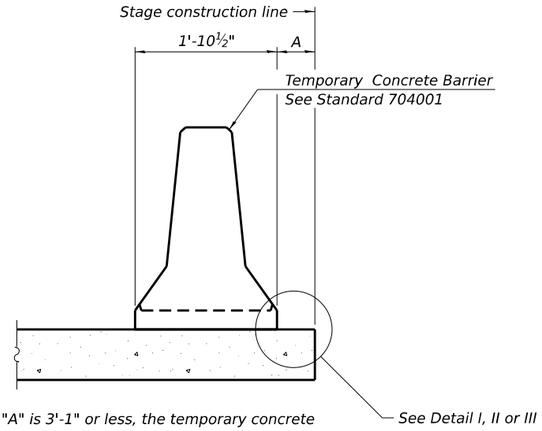

When "A" is 3'-1" or less, the temporary concrete barrier shall be restrained to the new slab according to Detail I, II or III. No restraint is required when "A" is greater than 3'-1".

NEW SLAB OR NEW DECK BEAM

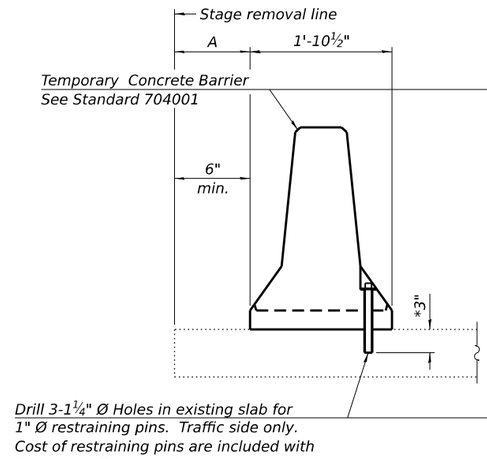

EXISTING SLAB

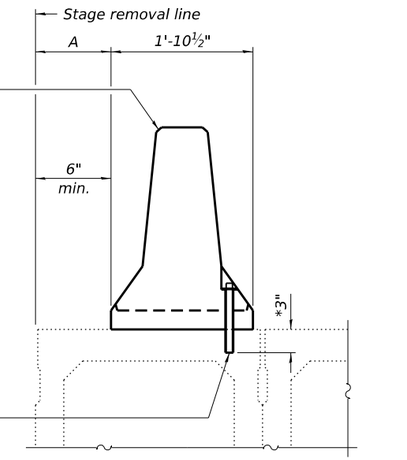

* When hot-mix asphalt wearing surface is present, embedment shall be 3" plus the wearing surface depth.

EXISTING DECK BEAM

SECTIONS THRU SLAB OR DECK BEAM

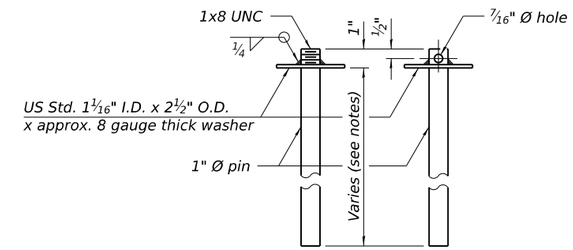

RESTRAINING PIN

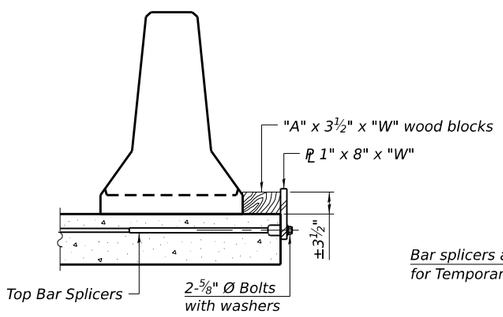

DETAIL I

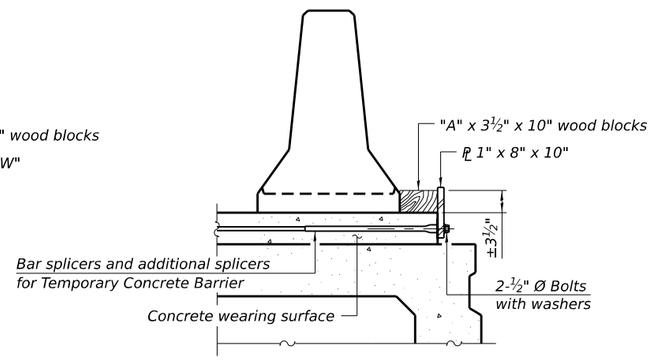

DETAIL II

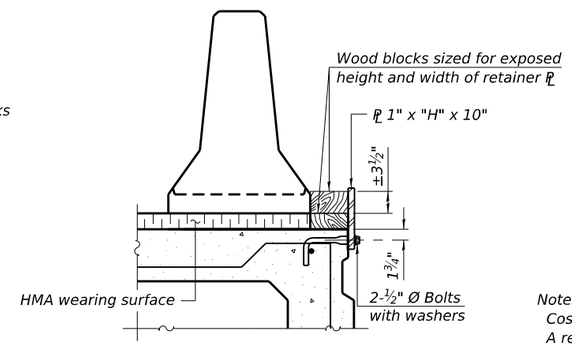

DETAIL III

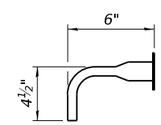

BAR SPLICER FOR #4 BAR - DETAIL III

Notes:

Cost of retainer assembly is included with Temporary Concrete Barrier.

A retainer assembly shall be located at the approximate ℄ of each temporary concrete barrier.

The retainer plate shall not be removed until the concrete on the adjacent stage is ready to be poured. For Detail III applications the retainer plate shall not be removed until just prior to placing the adjacent beam.

When the 'A' dimension is less than 1½", the wood block shall be omitted and the barrier shall be placed in direct contact with the steel retainer plate. For deck beam applications the minimum required 'A' distance is 6" to accommodate the shear key clamping device.

Detail I - Installation for a new bridge deck or bridge slab.

Detail II - Installation for a new deck beam with an initial concrete wearing surface. Additional bar splicers shall be provided at 6'-0" centers and paired with the bar splicers of the concrete wearing surface reinforcement to accommodate the installation of the retainer assemblies. The cost of the additional bar splicers is included with the concrete wearing surface.

Detail III - Installation for a new deck beam with no initial wearing surface or with an initial hot-mix asphalt (HMA) wearing surface present. The deck beam directly beneath the temporary concrete barrier shall be fabricated with bar splicer inserts in the side of the beam, as detailed, to accommodate the installation of the retainer assemblies. A pair of bar splicers, 6" apart, shall be placed at 6'-0" centers along the length of the beam. The cost of the bar splicers is included with the deck beam.

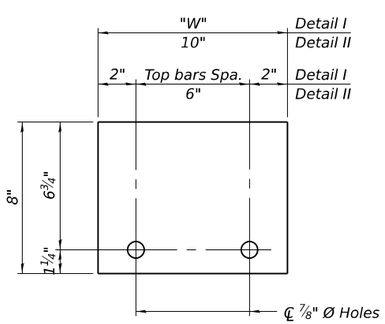

STEEL RETAINER PL 1" x 8" x "W"

(Detail I and II)

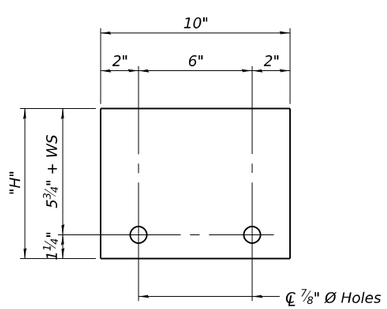

STEEL RETAINER PL 1" x "H" x 10"

(Detail III)

RAILING CRITERIA

NCHRP 350 Test Level	3
Railing Weight (plf)	440

R-27

5-15-2023

MODEL: $MODELNAME$
FILE NAME: D876E84-005-0029-TEMPCONCBARRIER.dgn

Jacobs
525 West Monroe
Suite 1600
Chicago, IL 60661
(312) 251-3000

USER NAME = jacobspw18ics10$	DESIGNED - CJF	REVISED -	
	DRAWN - EAK	REVISED -	
PLOT SCALE = 0.16666667 ' / in.	CHECKED - ED	REVISED -	
PLOT DATE = 12/4/2025	DATE - 2025/10/03	REVISED -	

STATE OF ILLINOIS
DEPARTMENT OF TRANSPORTATION

TEMPORARY CONCRETE BARRIER
STRUCTURE NO. 082-0029

SCALE: NTS | SHEET 5 OF 28 SHEETS | STA. | TO STA.

F.A.I. RTE.	SECTION	COUNTY	TOTAL SHEETS	SHEET NO.
70	Section82-(5,6)RS-2, 60-6RS-2	MADISON & ST. CLAIR	678	448
		CONTRACT NO. 76E84		
		ILLINOIS FED. AID PROJECT		

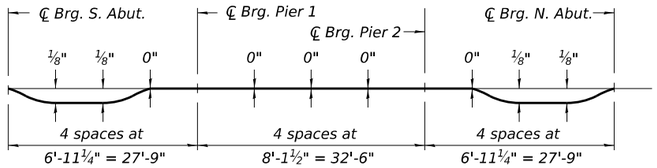

DEAD LOAD DEFLECTION DIAGRAM

(Includes weight of concrete only.)

Note:
The above deflections are not to be used in the field if the engineer is working from the grade elevations adjusted for dead load deflections as shown 7 and 8 of 28.

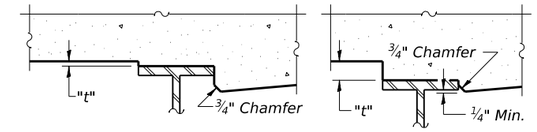

At Minimum Fillet

At Maximum Fillet

To determine "t": After all structural steel has been erected, elevations of the top flanges of the beams shall be taken at intervals shown to the lower left. These elevations subtracted from the "Theoretical Grade Elevations Adjusted for Dead Load Deflection" shown on sheets 7 and 8 of 28, minus slab thickness, equals the fillet heights "t" above top flange of beams.

FILLET HEIGHTS

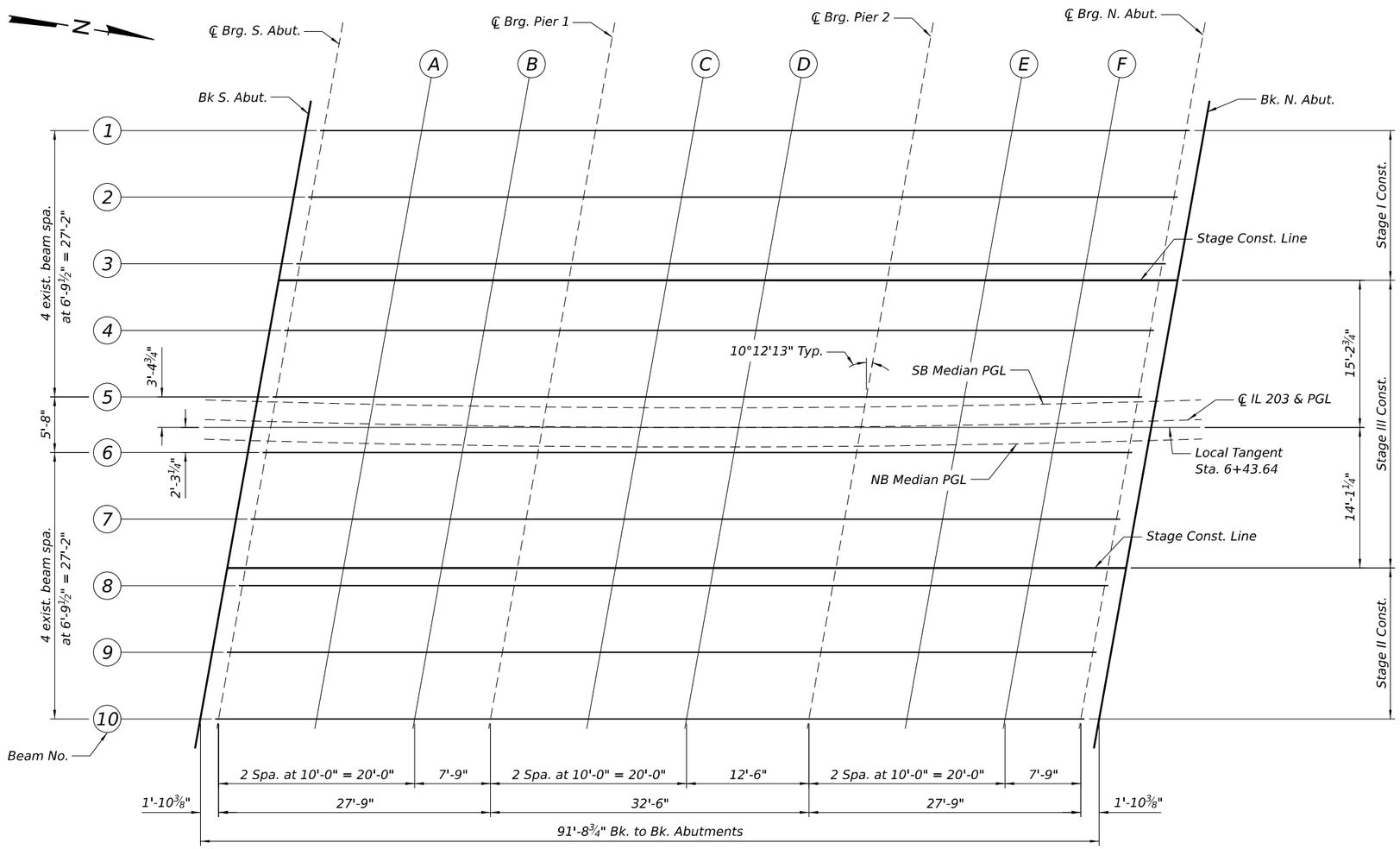

ELEVATION LOCATION PLAN

MODEL: $MODELNAMES
FILE NAME: D876E84-006-0029-TOS PLAN.dgn

Jacobs
525 West Monroe
Suite 1600
Chicago, IL 60661
(312) 251-3000

USER NAME = jacobspw18lcs10$	DESIGNED - CJF	REVISED -	
	DRAWN - EAK	REVISED -	
PLOT SCALE = 0.16666667 ' / in.	CHECKED - ED	REVISED -	
PLOT DATE = 12/4/2025	DATE - 2025/10/03	REVISED -	

STATE OF ILLINOIS
DEPARTMENT OF TRANSPORTATION

TOP OF SLAB ELEVATIONS LAYOUT
STRUCTURE NO. 082–0029

SCALE: NTS | SHEET 6 OF 28 SHEETS | STA. | TO STA.

F.A.I. RTE.	SECTION	COUNTY	TOTAL SHEETS	SHEET NO.
70	Section82-(5,6)RS-2, 60-6RS-2	MADISON & ST. CLAIR	678	449
		CONTRACT NO. 76E84		
		ILLINOIS FED. AID PROJECT		

BEAM 1

Location	Station	Offset	Theoretical Grade Elevations	Theoretical Grade Elevations Adjusted For Dead Load Deflection
Bk. S. Abut	5+94.65	-29.83	413.51	413.51
℄ Brg. S. Abut.	5+96.55	-29.89	413.54	413.54
A	6+06.73	-30.15	413.70	413.72
B	6+16.92	-30.35	413.87	413.88
℄ Brg. Pier 1	6+24.82	-30.46	414.00	414.00
C	6+35.02	-30.54	414.18	414.19
D	6+45.21	-30.57	414.37	414.37
℄ Brg. Pier 2	6+57.95	-30.50	414.61	414.61
E	6+68.15	-30.38	414.80	414.81
F	6+78.34	-30.20	415.01	415.02
℄ Brg. N. Abut.	6+86.24	-30.01	415.17	415.17
Bk. N. Abut	6+88.14	-29.96	415.21	415.21

BEAM 2

Location	Station	Offset	Theoretical Grade Elevations	Theoretical Grade Elevations Adjusted For Dead Load Deflection
Bk. S. Abut	5+93.62	-23.00	413.71	413.71
℄ Brg. S. Abut.	5+95.51	-23.06	413.74	413.74
A	6+05.65	-23.33	413.90	413.91
B	6+15.80	-23.54	414.06	414.07
℄ Brg. Pier 1	6+23.66	-23.65	414.20	414.20
C	6+33.81	-23.75	414.37	414.38
D	6+43.96	-23.78	414.55	414.56
℄ Brg. Pier 2	6+56.65	-23.72	414.79	414.79
E	6+66.80	-23.61	414.99	415.00
F	6+76.95	-23.43	415.19	415.20
℄ Brg. N. Abut.	6+84.81	-23.25	415.35	415.35
Bk. N. Abut	6+86.71	-23.20	415.39	415.39

BEAM 3

Location	Station	Offset	Theoretical Grade Elevations	Theoretical Grade Elevations Adjusted For Dead Load Deflection
Bk. S. Abut	5+92.60	-16.18	413.90	413.90
℄ Brg. S. Abut.	5+94.48	-16.24	413.93	413.93
A	6+04.58	-16.51	414.09	414.10
B	6+14.68	-16.72	414.26	414.26
℄ Brg. Pier 1	6+22.52	-16.85	414.39	414.39
C	6+32.62	-16.95	414.56	414.57
D	6+42.73	-16.98	414.74	414.75
℄ Brg. Pier 2	6+55.36	-16.94	414.98	414.98
E	6+65.46	-16.84	415.17	415.18
F	6+75.57	-16.67	415.37	415.38
℄ Brg. N. Abut.	6+83.40	-16.49	415.53	415.53
Bk. N. Abut	6+85.29	-16.45	415.57	415.57

WEST STAGE CONST. LINE

Location	Station	Offset	Theoretical Grade Elevations	Theoretical Grade Elevations Adjusted For Dead Load Deflection
Bk. S. Abut	5+92.34	-14.42	413.96	413.96
℄ Brg. S. Abut.	5+94.22	-14.48	413.98	413.98
A	6+04.31	-14.75	414.14	414.15
B	6+14.40	-14.97	414.30	414.31
℄ Brg. Pier 1	6+22.22	-15.09	414.44	414.44
C	6+32.32	-15.19	414.61	414.62
D	6+42.41	-15.23	414.79	414.80
℄ Brg. Pier 2	6+55.03	-15.19	415.02	415.02
E	6+65.12	-15.09	415.22	415.23
F	6+75.22	-14.92	415.42	415.43
℄ Brg. N. Abut.	6+83.04	-14.75	415.58	415.58
Bk. N. Abut	6+84.92	-14.71	415.62	415.62

BEAM 4

Location	Station	Offset	Theoretical Grade Elevations	Theoretical Grade Elevations Adjusted For Dead Load Deflection
Bk. S. Abut	5+91.59	-9.35	414.10	414.10
℄ Brg. S. Abut.	5+93.46	-9.41	414.13	414.13
A	6+03.52	-9.69	414.29	414.30
B	6+13.58	-9.91	414.45	414.45
℄ Brg. Pier 1	6+21.38	-10.04	414.58	414.58
C	6+31.44	-10.15	414.75	414.76
D	6+41.50	-10.19	414.93	414.94
℄ Brg. Pier 2	6+54.08	-10.16	415.16	415.16
E	6+64.14	-10.06	415.36	415.37
F	6+74.20	-9.90	415.56	415.57
℄ Brg. N. Abut.	6+82.00	-9.73	415.71	415.71
Bk. N. Abut	6+83.88	-9.69	415.75	415.75

BEAM 5

Location	Station	Offset	Theoretical Grade Elevations	Theoretical Grade Elevations Adjusted For Dead Load Deflection
Bk. S. Abut	5+90.58	-2.52	414.30	414.30
℄ Brg. S. Abut.	5+92.45	-2.58	414.32	414.32
A	6+02.52	-2.87	414.48	414.49
B	6+12.48	-3.10	414.64	414.65
℄ Brg. Pier 1	6+20.25	-3.23	414.77	414.77
C	6+30.27	-3.34	414.94	414.95
D	6+40.29	-3.40	415.12	415.13
℄ Brg. Pier 2	6+52.81	-3.37	415.35	415.35
E	6+62.83	-3.28	415.54	415.55
F	6+72.85	-3.13	415.74	415.75
℄ Brg. N. Abut.	6+80.62	-2.97	415.90	415.90
Bk. N. Abut	6+82.48	-2.93	415.93	415.93

EDGE OF MEDIAN & SB PGL

Location	Station	Offset	Theoretical Grade Elevations	Theoretical Grade Elevations Adjusted For Dead Load Deflection
Bk. S. Abut	5+90.91	-2.00	414.32	414.32
℄ Brg. S. Abut.	5+92.37	-2.00	414.34	414.34
A	6+02.23	-2.00	414.50	414.51
B	6+12.31	-2.00	414.67	414.68
℄ Brg. Pier 1	6+20.04	-2.00	414.80	414.80
C	6+30.03	-2.00	414.98	414.99
D	6+40.04	-2.00	415.16	415.17
℄ Brg. Pier 2	6+52.55	-2.00	415.39	415.39
E	6+62.58	-2.00	415.58	415.59
F	6+72.62	-2.00	415.77	415.78
℄ Brg. N. Abut.	6+80.42	-2.00	415.92	415.92
Bk. N. Abut	6+82.29	-2.00	415.96	415.96

℄ IL 203 & CROWN

Location	Station	Offset	Theoretical Grade Elevations	Theoretical Grade Elevations Adjusted For Dead Load Deflection
Bk. S. Abut	5+90.22	0.00	414.37	414.37
℄ Brg. S. Abut.	5+92.07	0.00	414.40	414.40
A	6+02.02	0.00	414.56	414.57
B	6+11.99	0.00	414.73	414.74
℄ Brg. Pier 1	6+19.71	0.00	414.86	414.86
C	6+29.69	0.00	415.03	415.04
D	6+39.68	0.00	415.21	415.22
℄ Brg. Pier 2	6+52.18	0.00	415.44	415.44
E	6+62.20	0.00	415.63	415.64
F	6+72.22	0.00	415.82	415.83
℄ Brg. N. Abut.	6+80.01	0.00	415.98	415.98
Bk. N. Abut	6+81.88	0.00	416.01	416.01

EDGE OF MEDIAN & NB PGL

Location	Station	Offset	Theoretical Grade Elevations	Theoretical Grade Elevations Adjusted For Dead Load Deflection
Bk. S. Abut	5+89.93	2.00	414.30	414.30
℄ Brg. S. Abut.	5+91.78	2.00	414.33	414.33
A	6+01.72	2.00	414.49	414.51
B	6+11.67	2.00	414.66	414.67
℄ Brg. Pier 1	6+19.38	2.00	414.79	414.79
C	6+29.35	2.00	414.97	414.97
D	6+39.33	2.00	415.14	415.15
℄ Brg. Pier 2	6+51.81	2.00	415.37	415.37
E	6+61.81	2.00	415.56	415.57
F	6+71.83	2.00	415.75	415.77
℄ Brg. N. Abut.	6+79.60	2.00	415.91	415.91
Bk. N. Abut	6+81.47	2.00	415.94	415.94

BEAM 6

Location	Station	Offset	Theoretical Grade Elevations	Theoretical Grade Elevations Adjusted For Dead Load Deflection
Bk. S. Abut	5+89.76	3.17	414.33	414.33
℄ Brg. S. Abut.	5+91.62	3.11	414.36	414.36
A	6+01.59	2.82	414.52	414.53
B	6+11.57	2.59	414.68	414.68
℄ Brg. Pier 1	6+19.31	2.45	414.81	414.81
C	6+29.29	2.33	414.98	414.98
D	6+39.28	2.27	415.15	415.16
℄ Brg. Pier 2	6+51.76	2.28	415.38	415.38
E	6+61.74	2.37	415.57	415.58
F	6+71.73	2.51	415.77	415.78
℄ Brg. N. Abut.	6+79.47	2.67	415.92	415.92
Bk. N. Abut	6+81.33	2.71	415.96	415.96

BEAM 7

Location	Station	Offset	Theoretical Grade Elevations	Theoretical Grade Elevations Adjusted For Dead Load Deflection
Bk. S. Abut	5+88.77	10.00	414.53	414.53
℄ Brg. S. Abut.	5+90.62	9.94	414.56	414.56
A	6+00.56	9.64	414.71	414.72
B	6+10.49	9.40	414.87	414.88
℄ Brg. Pier 1	6+18.20	9.26	415.00	415.00
C	6+28.14	9.13	415.17	415.17
D	6+38.08	9.07	415.34	415.35
℄ Brg. Pier 2	6+50.51	9.07	415.57	415.57
E	6+60.45	9.15	415.76	415.77
F	6+70.39	9.28	415.95	415.96
℄ Brg. N. Abut.	6+78.10	9.43	416.11	416.11
Bk. N. Abut	6+79.95	9.47	416.14	416.14

EAST STAGE CONST. LINE

Location	Station	Offset	Theoretical Grade Elevations	Theoretical Grade Elevations Adjusted For Dead Load Deflection
Bk. S. Abut	5+88.04	15.07	414.68	414.68
℄ Brg. S. Abut.	5+89.89	15.01	414.70	414.70
A	5+99.79	14.71	414.86	414.87
B	6+09.70	14.46	415.01	415.02
℄ Brg. Pier 1	6+17.38	14.32	415.14	415.14
C	6+27.29	14.18	415.31	415.31
D	6+37.20	14.11	415.48	415.49
℄ Brg. Pier 2	6+49.59	14.11	415.71	415.71
E	6+59.50	14.18	415.90	415.91
F	6+69.41	14.31	416.09	416.10
℄ Brg. N. Abut.	6+77.09	14.45	416.24	416.24
Bk. N. Abut	6+78.94	14.49	416.28	416.28

BEAM 8

Location	Station	Offset	Theoretical Grade Elevations	Theoretical Grade Elevations Adjusted For Dead Load Deflection
Bk. S. Abut	5+87.79	16.83	414.73	414.73
℄ Brg. S. Abut.	5+89.63	16.77	414.75	414.75
A	5+99.53	16.46	414.91	414.92
B	6+09.42	16.22	415.06	415.07
℄ Brg. Pier 1	6+17.09	16.07	415.19	415.19
C	6+26.99	15.94	415.36	415.36
D	6+36.89	15.86	415.53	415.54
℄ Brg. Pier 2	6+49.27	15.86	415.76	415.76
E	6+59.17	15.92	415.94	415.95
F	6+69.07	16.05	416.14	416.15
℄ Brg. N. Abut.	6+76.75	16.19	416.29	416.29
Bk. N. Abut	6+78.59	16.23	416.33	416.33

BEAM 9

Location	Station	Offset	Theoretical Grade Elevations	Theoretical Grade Elevations Adjusted For Dead Load Deflection
Bk. S. Abut	5+86.82	23.66	414.92	414.92
℄ Brg. S. Abut.	5+88.66	23.60	414.95	414.95
A	5+98.51	23.29	415.10	415.11
B	6+08.36	23.04	415.26	415.26
℄ Brg. Pier 1	6+16.00	22.88	415.38	415.38
C	6+25.86	22.74	415.55	415.55
D	6+35.72	22.66	415.72	415.73
℄ Brg. Pier 2	6+48.04	22.65	415.94	415.94
E	6+57.90	22.70	416.13	416.14
F	6+67.76	22.82	416.32	416.33
℄ Brg. N. Abut.	6+75.40	22.96	416.47	416.47
Bk. N. Abut	6+77.24	23.00	416.51	416.51

BEAM 10

Location	Station	Offset	Theoretical Grade Elevations	Theoretical Grade Elevations Adjusted For Dead Load Deflection
Bk. S. Abut	5+85.86	30.50	415.12	415.12
℄ Brg. S. Abut.	5+87.69	30.43	415.15	415.15
A	5+97.50	30.11	415.30	415.31
B	6+07.31	29.85	415.45	415.46
℄ Brg. Pier 1	6+14.92	29.70	415.57	415.57
C	6+24.73	29.55	415.74	415.75
D	6+34.55	29.46	415.91	415.92
℄ Brg. Pier 2	6+46.82	29.44	416.13	416.13
E	6+56.64	29.49	416.32	416.33
F	6+66.46	29.60	416.51	416.52
℄ Brg. N. Abut.	6+74.07	29.73	416.66	416.66
Bk. N. Abut	6+75.90	29.76	416.69	416.69

MODEL: $MODELNAMES
FILE NAME: D876E84-008-0029-TOS ELEV 02.dgn

Jacobs
525 West Monroe
Suite 1600
Chicago, IL 60661
(312) 251-3000

USER NAME = Jacobspw18lcs10$	DESIGNED - CJF	REVISED -	
	DRAWN - EAK	REVISED -	
PLOT SCALE = 0.16666667 ' / in.	CHECKED - ED	REVISED -	
PLOT DATE = 12/4/2025	DATE - 2025/10/03	REVISED -	

STATE OF ILLINOIS
DEPARTMENT OF TRANSPORTATION

TOP OF SLAB ELEVATIONS
STRUCTURE NO. 082-0029

SCALE: NTS | SHEET 8 OF 28 SHEETS | STA. | TO STA.

F.A.I. RTE.	SECTION	COUNTY	TOTAL SHEETS	SHEET NO.
70	Section82-(5,6)RS-2, 60-6RS-2	MADISON & ST. CLAIR	678	451

CONTRACT NO. 76E84

ILLINOIS | FED. AID PROJECT

WEST EDGE OF SHOULDER

Location	Station	Offset	Theoretical Grade Elevations
S. End S. Appr. Slab	5+50.56	-33.27	412.94
A1	5+60.59	-32.51	413.04
A2	5+70.63	-31.69	413.14
A3	5+80.63	-30.93	413.26
A4	5+90.83	-31.30	413.41
N. End S. Appr. Slab	5+95.92	-31.45	413.49
S. End N. Appr. Slab	6+87.44	-31.56	415.15
A5	6+97.63	-31.26	415.36
A6	7+07.91	-31.29	415.57
A7	7+18.34	-31.86	415.77
A8	7+28.77	-32.36	415.98
N. End N. Appr. Slab	7+33.98	-32.59	416.09

WEST EDGE OF ROADWAY

Location	Station	Offset	Theoretical Grade Elevations
S. End S. Appr. Slab	5+49.67	-26.00	413.11
A1	5+59.75	-26.00	413.20
A2	5+69.86	-26.00	413.30
A3	5+79.93	-26.00	413.40
A4	5+90.04	-26.00	413.56
N. End S. Appr. Slab	5+95.10	-26.00	413.64
S. End N. Appr. Slab	6+86.26	-26.00	415.29
A5	6+96.48	-26.00	415.50
A6	7+06.72	-26.00	415.71
A7	7+16.98	-26.00	415.93
A8	7+27.24	-26.00	416.15
N. End N. Appr. Slab	7+32.38	-26.00	416.26

STAGE CONSTRUCTION LINE

Location	Station	Offset	Theoretical Grade Elevations
S. End S. Appr. Slab	5+48.03	-12.40	413.42
A1	5+58.09	-12.96	413.52
A2	5+68.18	-13.47	413.64
A3	5+78.24	-13.91	413.75
A4	5+88.32	-14.29	413.89
N. End S. Appr. Slab	5+93.36	-14.45	413.97
S. End N. Appr. Slab	6+83.90	-14.73	415.60
A5	6+93.99	-14.45	415.81
A6	7+04.07	-14.10	416.03
A7	7+14.15	-13.69	416.25
A8	7+24.22	-13.22	416.48
N. End N. Appr. Slab	7+29.26	-12.96	416.59

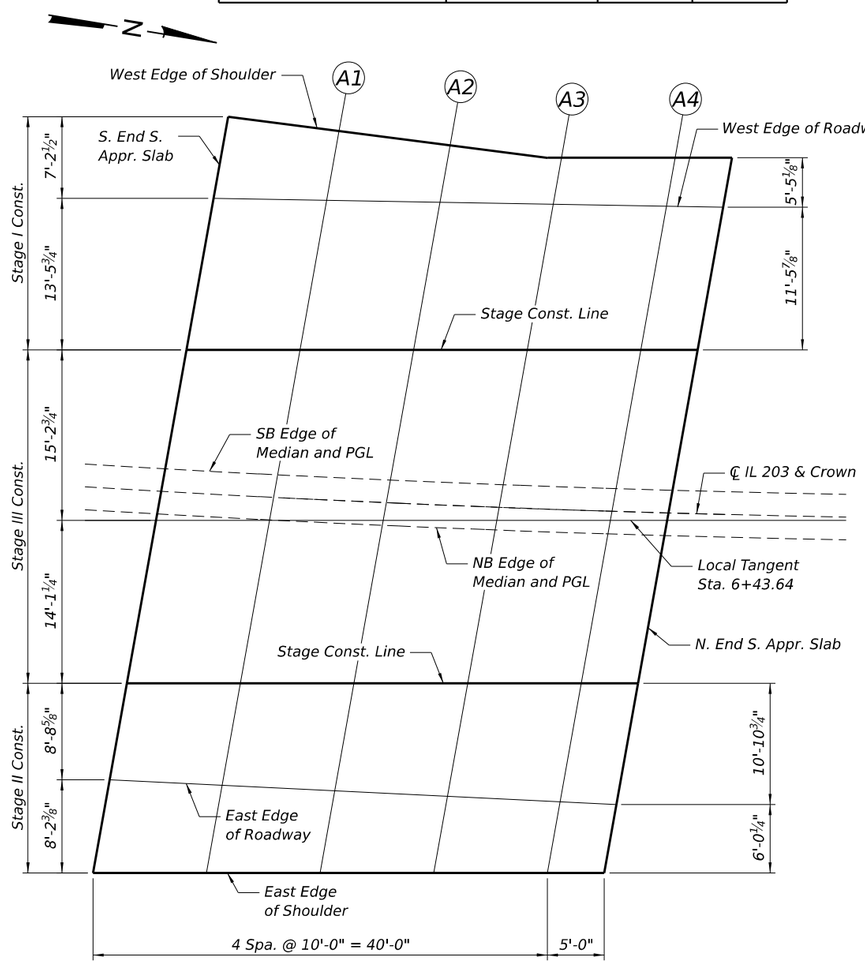

SOUTH APPROACH SLAB PLAN

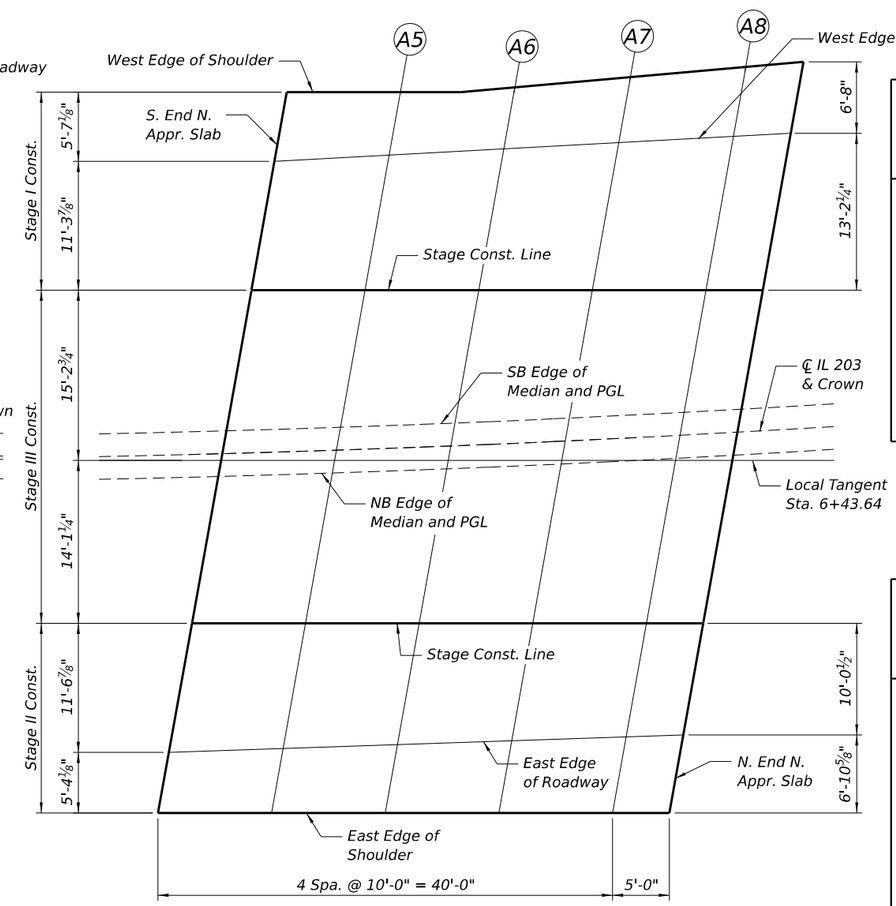

NORTH APPROACH SLAB PLAN

SB EDGE OF MEDIAN & PGL

Location	Station	Offset	Theoretical Grade Elevations
S. End S. Appr. Slab	5+46.79	-2.00	413.65
A1	5+56.72	-2.00	413.79
A2	5+66.67	-2.00	413.94
A3	5+76.59	-2.00	414.09
A4	5+86.54	-2.00	414.25
N. End S. Appr. Slab	5+91.52	-2.00	414.34
S. End N. Appr. Slab	6+81.27	-2.00	415.94
A5	6+91.33	-2.00	416.14
A6	7+01.41	-2.00	416.35
A7	7+11.50	-2.00	416.56
A8	7+21.61	-2.00	416.77
N. End N. Appr. Slab	7+26.67	-2.00	416.88

℄ IL 203 & CROWN

Location	Station	Offset	Theoretical Grade Elevations
S. End S. Appr. Slab	5+46.55	0.00	413.69
A1	5+56.47	0.00	413.84
A2	5+66.41	0.00	413.99
A3	5+76.32	0.00	414.15
A4	5+86.26	0.00	414.30
N. End S. Appr. Slab	5+91.23	0.00	414.40
S. End N. Appr. Slab	6+80.86	0.00	415.99
A5	6+90.91	0.00	416.19
A6	7+00.98	0.00	416.40
A7	7+11.06	0.00	416.61
A8	7+21.15	0.00	416.82
N. End N. Appr. Slab	7+26.20	0.00	416.93

MODEL: $MODELNAMES
FILE NAME: D876E84-009-0029-TOS APP PLAN.dgn

Jacobs
525 West Monroe
Suite 1600
Chicago, IL 60661
(312) 251-3000

USER NAME = jacobspw18lcs10$	DESIGNED - CJF	REVISED -	
	DRAWN - EAK	REVISED -	
PLOT SCALE = 0.16666667 ' / in.	CHECKED - ED	REVISED -	
PLOT DATE = 12/4/2025	DATE - 2025/10/03	REVISED -	

STATE OF ILLINOIS
DEPARTMENT OF TRANSPORTATION

TOP OF APPROACH SLAB ELEVATIONS
STRUCTURE NO. 082--0029

SCALE: NTS | SHEET 9 OF 28 SHEETS | STA. | TO STA.

F.A.I. RTE.	SECTION	COUNTY	TOTAL SHEETS	SHEET NO.
70	Section82-(5,6)RS-2, 60-6RS-2	MADISON & ST. CLAIR	678	452

CONTRACT NO. 76E84

ILLINOIS | FED. AID PROJECT

NB EDGE OF MEDIAN & PGL

Location	Station	Offset	Theoretical Grade Elevations
S. End S. Appr. Slab	5+46.32	2.00	413.64
A1	5+56.22	2.00	413.78
A2	5+66.15	2.00	413.93
A3	5+76.04	2.00	414.08
A4	5+85.97	2.00	414.24
N. End S. Appr. Slab	5+90.94	2.00	414.33
S. End N. Appr. Slab	6+80.45	2.00	415.92
A5	6+90.49	2.00	416.12
A6	7+00.54	2.00	416.33
A7	7+10.61	2.00	416.54
A8	7+20.69	2.00	416.75
N. End N. Appr. Slab	7+25.73	2.00	416.86

STAGE CONSTRUCTION LINE

Location	Station	Offset	Theoretical Grade Elevations
S. End S. Appr. Slab	5+44.50	17.20	413.96
A1	5+54.43	16.61	414.12
A2	5+64.33	16.09	414.29
A3	5+74.20	15.62	414.46
A4	5+84.10	15.22	414.62
N. End S. Appr. Slab	5+89.05	15.04	414.69
S. End N. Appr. Slab	6+77.93	14.47	416.26
A5	6+87.84	14.72	416.46
A6	6+97.74	15.02	416.67
A7	7+07.64	15.39	416.89
A8	7+17.54	15.82	417.11
N. End N. Appr. Slab	7+22.48	16.06	417.22

EAST EDGE OF ROADWAY

Location	Station	Offset	Theoretical Grade Elevations
S. End S. Appr. Slab	5+43.54	26.00	414.14
A1	5+53.29	26.00	414.34
A2	5+63.07	26.00	414.54
A3	5+72.82	26.00	414.74
A4	5+82.59	26.00	414.93
N. End S. Appr. Slab	5+87.48	26.00	415.01
S. End N. Appr. Slab	6+75.64	26.00	416.57
A5	6+85.52	26.00	416.77
A6	6+95.42	26.00	416.97
A7	7+05.33	26.00	417.17
A8	7+15.25	26.00	417.38
N. End N. Appr. Slab	7+20.22	26.00	417.48

EAST EDGE OF SHOULDER

Location	Station	Offset	Theoretical Grade Elevations
S. End S. Appr. Slab	5+42.60	34.28	414.31
A1	5+52.37	33.67	414.51
A2	5+62.17	33.13	414.71
A3	5+71.94	32.66	414.91
A4	5+81.73	32.24	415.11
N. End S. Appr. Slab	5+86.63	32.05	415.18
S. End N. Appr. Slab	6+74.59	31.32	416.72
A5	6+84.40	31.55	416.92
A6	6+94.20	31.83	417.12
A7	7+04.00	32.18	417.33
A8	7+13.79	32.59	417.55
N. End N. Appr. Slab	7+18.68	32.82	417.66

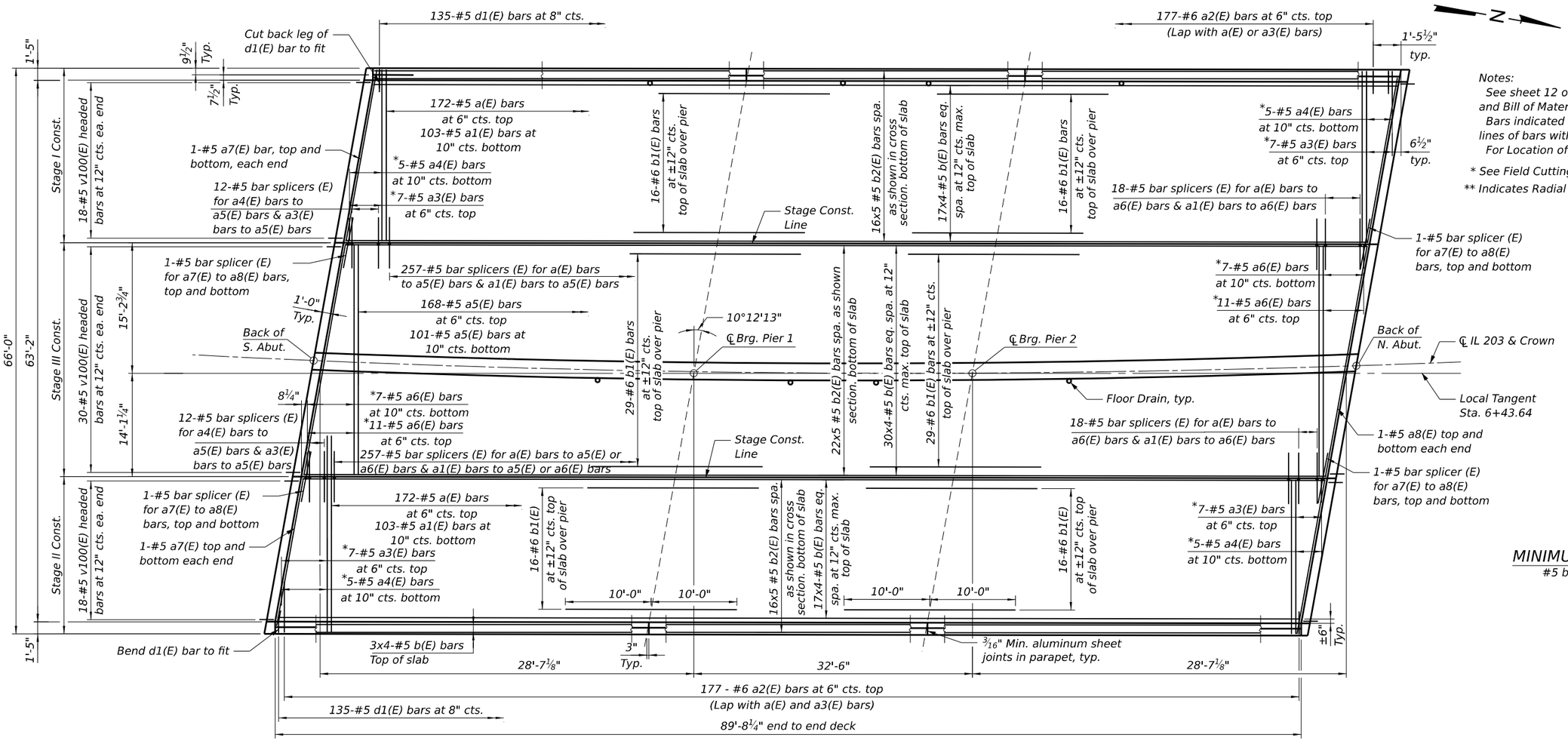

Notes:
See sheet 12 of 28 for superstructure details and Bill of Materials.
Bars indicated thus 20x3-#5 etc. indicates 20 lines of bars with 3 lengths per line.
For Location of Floor Drains, see sheet 1 of 28.

* See Field Cutting Diagram on sheet 12 of 28.

** Indicates Radial to ℄ of Roadway.

MINIMUM BAR LAP

#5 bar = 3'-10"

PLAN

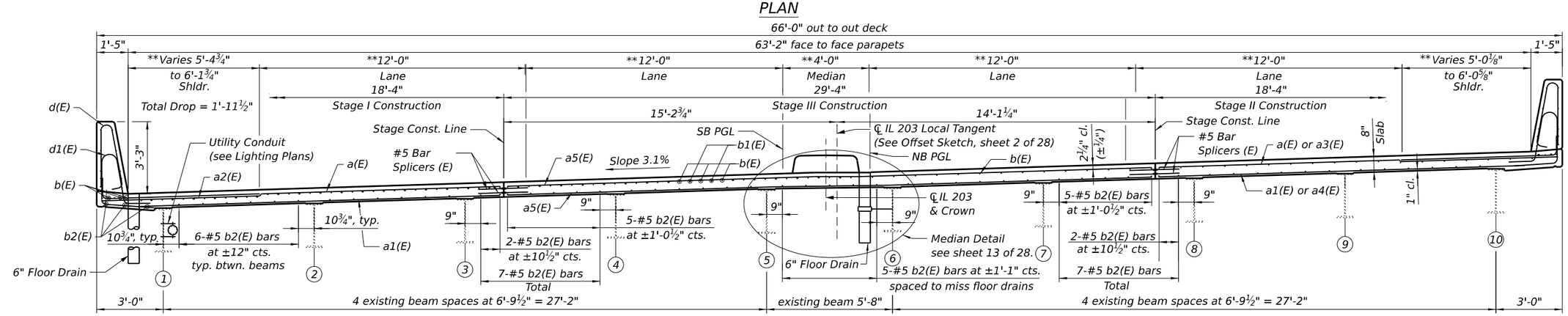

NEAR PIER — NEAR MIDSPAN

CROSS SECTION

(Looking North)

MODEL: $MODELNAME$
FILE NAME: D876E84-011-0029-SUPERSTRU.dgn

Jacobs
525 West Monroe
Suite 1600
Chicago, IL 60661
(312) 251-3000

USER NAME = jacobspw18lcs09$	DESIGNED - CJF	REVISED -	
	DRAWN - EAK	REVISED -	
PLOT SCALE = 0.16666667 ' / in.	CHECKED - ED	REVISED -	
PLOT DATE = 12/8/2025	DATE - 2025/10/03	REVISED -	

STATE OF ILLINOIS
DEPARTMENT OF TRANSPORTATION

SUPERSTRUCTURE
STRUCTURE NO. 082–0029

SCALE: NTS | SHEET 11 OF 28 SHEETS | STA. | TO STA.

F.A.I. RTE.	SECTION	COUNTY	TOTAL SHEETS	SHEET NO.
70	Section82-(5,6)RS-2, 60-6RS-2	MADISON & ST. CLAIR	678	454

CONTRACT NO. 76E84
ILLINOIS | FED. AID PROJECT

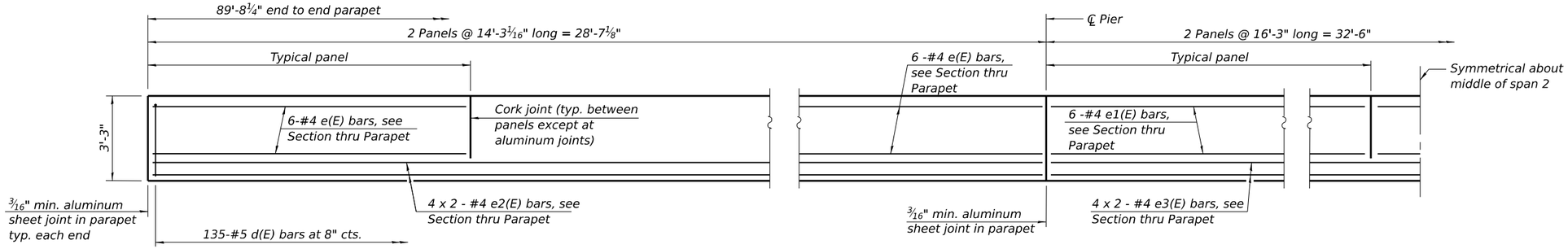

INSIDE ELEVATION OF PARAPET

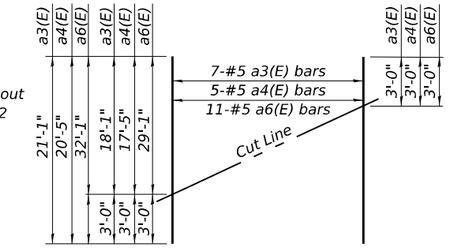

FIELD CUTTING DIAGRAM

Order a3(E), a4(E), and a6(E) bars full length. Cut as shown and use remainder of bars in opposite end of deck.

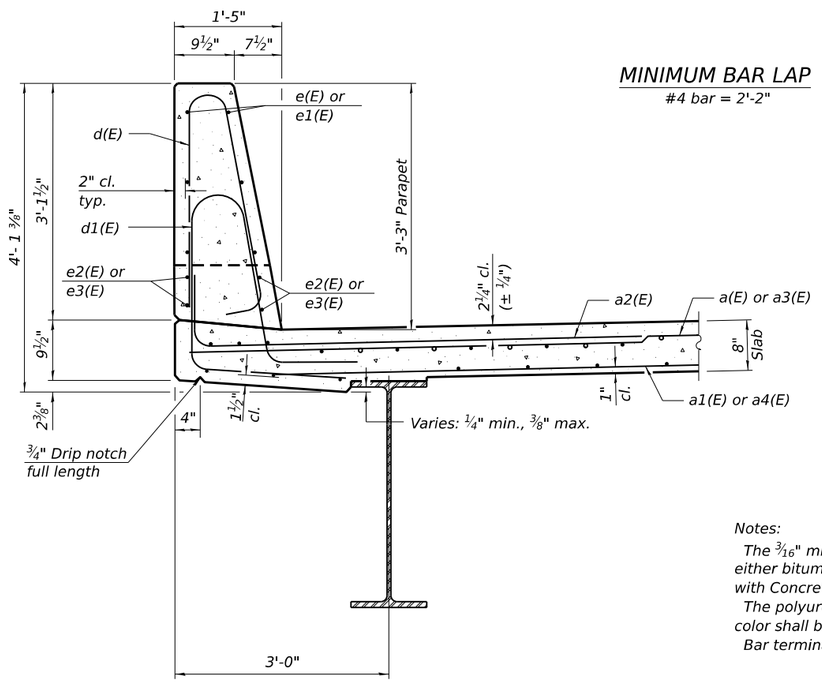

MINIMUM BAR LAP

#4 bar = 2'-2"

SECTION THRU PARAPET

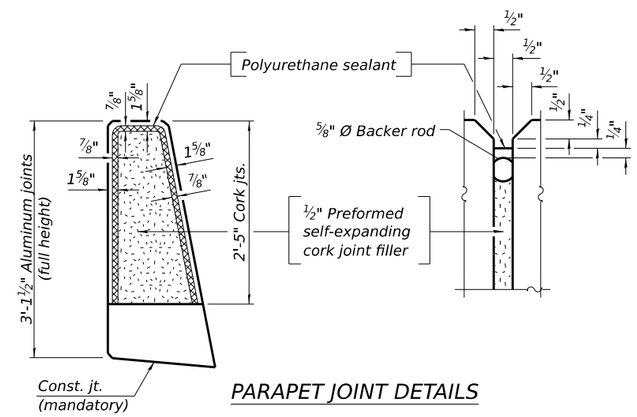

PARAPET JOINT DETAILS

Notes:

The 3/16" min. aluminum sheet shall be ASTM B 209 alloy 3003-H14 and coated with 5 mils of either bitumen paint or epoxy paint to minimize reaction with wet concrete. Cost included with Concrete Superstructure.

The polyurethane sealant shall be according to Article 1050.04 of the Std. Spec. and the color shall be gray.

Bar terminators, paid for separately. See Total Bill of Material.

SUPERSTRUCTURE BILL OF MATERIAL

Bar	No.	Size	Length	Shape
a(E)	344	#5	18'-1"	
a1(E)	206	#5	17'-5"	
a2(E)	354	#6	8'-4"	
a3(E)	14	#5	21'-1"	
a4(E)	10	#5	20'-5"	
a5(E)	269	#5	29'-1"	
a6(E)	18	#5	32'-1"	
a7(E)	8	#5	18'-4"	
a8(E)	4	#5	29'-6"	
b(E)	296	#5	25'-4"	
b1(E)	122	#6	20'-0"	
b2(E)	270	#5	21'-0"	
c1(E)	90	#5	2'-7"	
c2(E)	180	#5	1'-4"	
d(E)	270	#5	6'-4"	
d1(E)	270	#5	8'-6"	
e(E)	48	#4	14'-0"	
e1(E)	24	#4	16'-0"	
e2(E)	32	#4	15'-6"	
e3(E)	16	#4	17'-5"	
m10(E)	12	#6	19'-6"	
m11(E)	32	#6	6'-8"	
m12(E)	8	#6	2'-2"	
m13(E)	6	#6	29'-7"	
m14(E)	4	#6	5'-6"	
s10(E)	100	#5	5'-10"	
s11(E)	100	#5	7'-10"	
u(E)	12	#6	5'-5"	
v100(E)	132	#5	3'-1"	
Reinforcement Bars, Epoxy Coated			Pound	50,460
Concrete Superstructure			Cu. Yds.	159.0

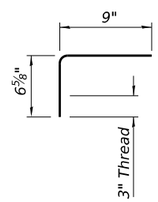

BAR c2(E)

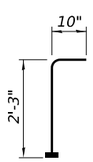

BAR v100(E)

(Headed. 132 - #5 Bar terminators)

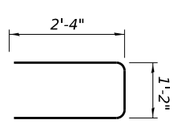

BAR s10(E)

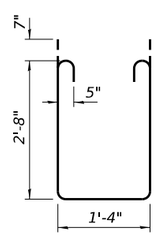

BAR s11(E)

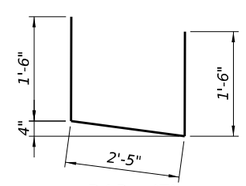

BAR u(E)

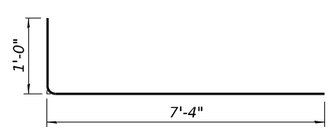

BAR a2(E)

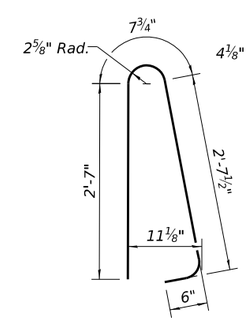

BAR d(E)

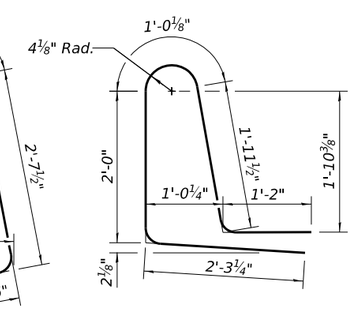

BAR d1(E)

MODEL: $MODELNAMES
FILE NAME: D876E84-012-00229-SUPERSTRU DET 1.dgn

Jacobs
525 West Monroe
Suite 1600
Chicago, IL 60661
(312) 251-3000

USER NAME = jacobspw18lcs11$	DESIGNED - CJF	REVISED -	
	DRAWN - EAK	REVISED -	
PLOT SCALE = 0.16666667 ' / in.	CHECKED - ED	REVISED -	
PLOT DATE = 12/4/2025	DATE - 2025/10/03	REVISED -	

STATE OF ILLINOIS
DEPARTMENT OF TRANSPORTATION

SUPERSTRUCTURE DETAILS I
STRUCTURE NO. 082-0029

SCALE: NTS | SHEET 12 OF 28 SHEETS | STA. | TO STA.

F.A.I. RTE.	SECTION	COUNTY	TOTAL SHEETS	SHEET NO.
70	Section82-(5,6)RS-2, 60-6RS-2	MADISON & ST. CLAIR	678	455
		CONTRACT NO. 76E84		
	ILLINOIS	FED. AID PROJECT		

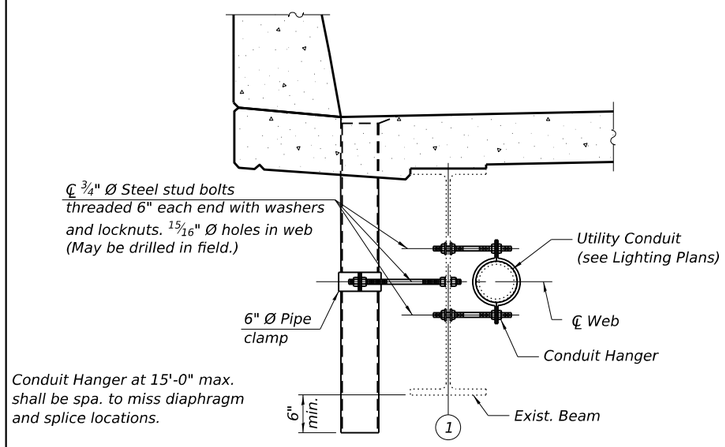

SECTION THRU PARAPET

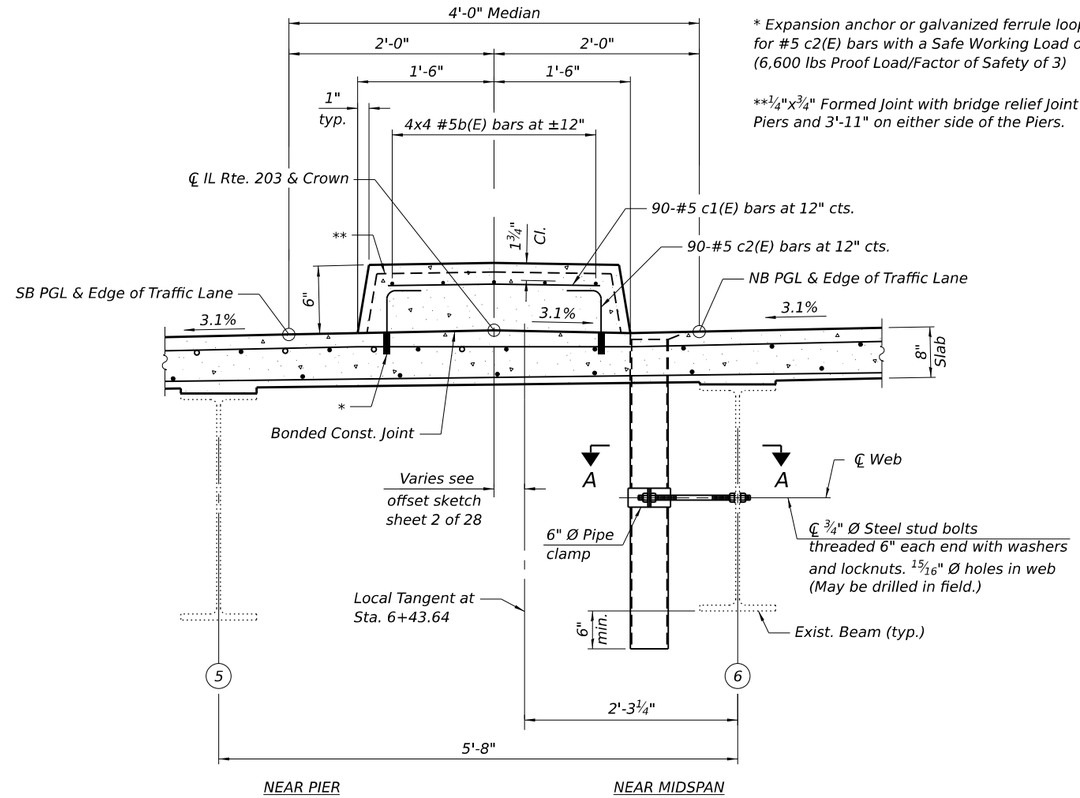

* Expansion anchor or galvanized ferrule loop slab insert for #5 c2(E) bars with a Safe Working Load of 2,200 lbs (6,600 lbs Proof Load/Factor of Safety of 3)

**¼"x¾" Formed Joint with bridge relief Joint Sealer at Piers and 3'-11" on either side of the Piers.

SECTION THRU MEDIAN

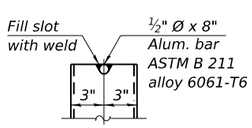

ALUMINUM TUBE

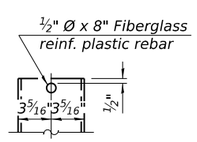

FIBERGLASS PIPE

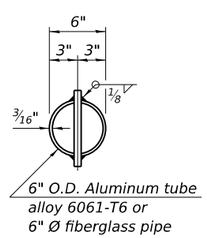

TOP PLAN
(Showing aluminum tube)

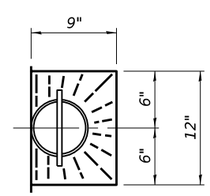

TOP PLAN

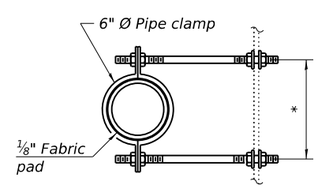

SECTION A-A
*Dimension as required by pipe clamp

Notes:

Fiberglass pipe shall conform to ASTM D2996, with short-time rupture strength hoop tensile stress of 30,000 p.s.i. minimum.

The exterior surfaces of the floor drains shall be painted according to Article 506 with the finish coat as specified. The exterior surfaces of the drains shall be cleaned according to the Society of Protective Coating's Spec. SSPC-SP1 prior to painting.

The top portion of aluminum floor drains shall be coated with 5 mils of either bitumen paint or epoxy paint to minimize reaction with wet concrete.

The clamping device shall be galvanized according to AASHTO M 232. Cost of clamping device included with Floor Drains.

MODEL: $MODELNAMES
FILE NAME: D876E84-012B-0029-SUPERSTRU DET 2.dgn

Jacobs
525 West Monroe
Suite 1600
Chicago, IL 60661
(312) 251-3000

USER NAME = jacobspw18lcs09$	DESIGNED - CJF	REVISED -	
	DRAWN - EAK	REVISED -	
PLOT SCALE = 0.16666667 ' / in.	CHECKED - ED	REVISED -	
PLOT DATE = 12/4/2025	DATE - 2025/10/03	REVISED -	

STATE OF ILLINOIS
DEPARTMENT OF TRANSPORTATION

SUPERSTRUCTURE DETAILS II
STRUCTURE NO. 082-0029

SCALE: NTS | SHEET 13 OF 28 SHEETS | STA. | TO STA.

F.A.I. RTE.	SECTION	COUNTY	TOTAL SHEETS	SHEET NO.
70	Section82-(5,6)RS-2, 60-6RS-2	MADISON & ST. CLAIR	678	456
		CONTRACT NO. 76E84		
		ILLINOIS	FED. AID PROJECT	

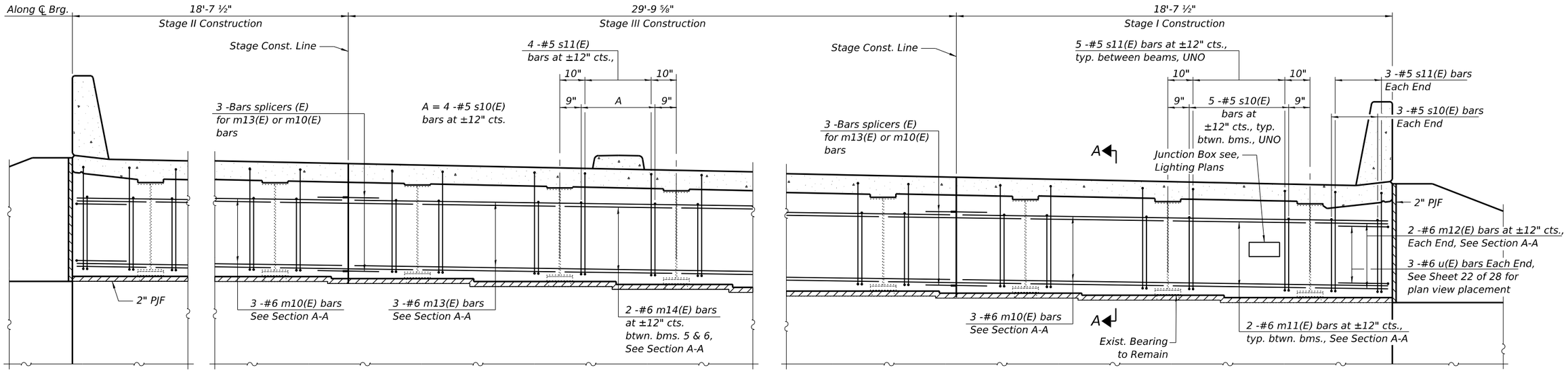

DIAPHRAGM AT SOUTH ABUTMENT

(Looking South)

* Side retainers at both abutments shall be removed. The anchor bolts shall be cut flush with the top of abutment cap. (Cost of cutting anchor bolts included with structural steel removal.)

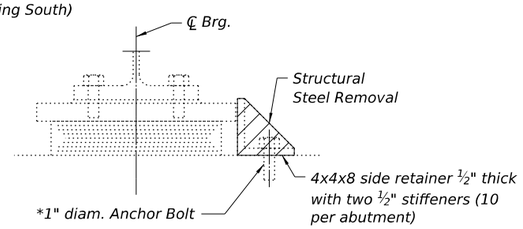

SOUTH BEARING DETAIL

Note:
For additional structural steel removal details and quantities, see sheet 18 of 28.

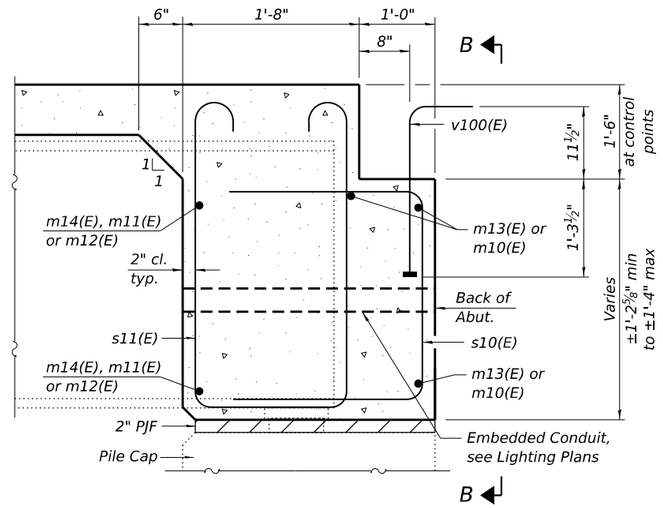

SECTION A-A

(at Rt. ∠'s)

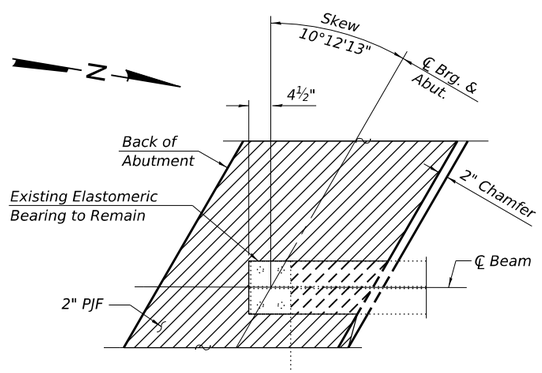

TYPICAL PILE CAP PLAN

(Showing bottom flange of beam Bearing & PJF)

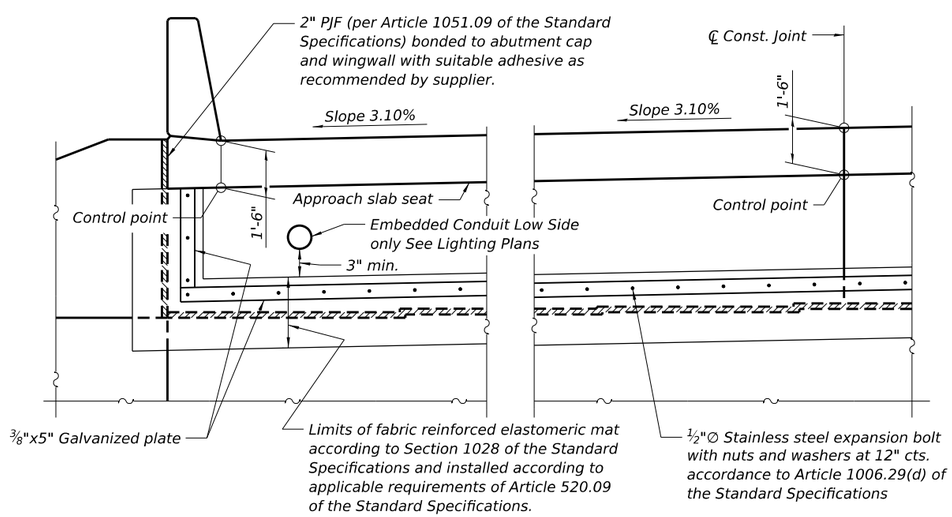

VIEW B-B

Note:
Cost of fabric reinforced elastomeric mat, galvanized plate, stainless steel expansion bolts with nuts and washers and installation are included in the cost of Concrete Superstructure.
All spalls of pile cap croners that may have occured prior to or during concrete removal shall be repaired by the direction of the engineer prior to placing the 2" PJF on the pile cap.

BILL OF MATERIAL

ITEM	UNIT	TOTAL
Structural Steel Removal	Pounds	90

Notes:
See sheet 12 of 28 for superstructure details and Bill of Material.
The s10(E) and s11(E) bars shall be placed parallel to the beams. Spacing for these bars shall be at right angles to the beams.
The approach slab seat shall have a constant slope determined from the control points shown.

MODEL: $MODELNAMES
FILE NAME: D876E84-013-0029-DIAPH SOUTH.dgn

Jacobs
525 West Monroe
Suite 1600
Chicago, IL 60661
(312) 251-3000

USER NAME = jacobspw18lcs10$	DESIGNED - CJF	REVISED -	
	DRAWN - EAK	REVISED -	
PLOT SCALE = 0.16666667 ' / in.	CHECKED - ED	REVISED -	
PLOT DATE = 12/4/2025	DATE - 2025/10/03	REVISED -	

STATE OF ILLINOIS
DEPARTMENT OF TRANSPORTATION

SOUTH DIAPHRAGM DETAILS
STRUCTURE NO. 082-0029

SCALE: NTS | SHEET 14 OF 28 SHEETS | STA. | TO STA.

F.A.I. RTE.	SECTION	COUNTY	TOTAL SHEETS	SHEET NO.
70	Section82-(5,6)RS-2, 60-6RS-2	MADISON & ST. CLAIR	678	457

CONTRACT NO. 76E84
ILLINOIS | FED. AID PROJECT

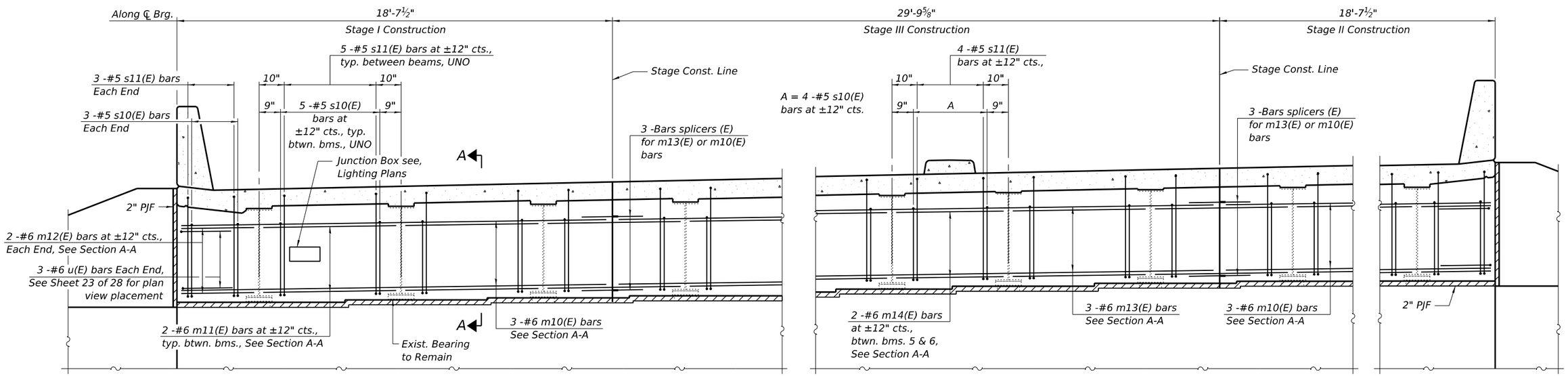

DIAPHRAGM AT NORTH ABUTMENT

(Looking North)

* Side retainers at both abutments shall be removed. The anchor bolts shall be cut flush with the top of abutment cap. (Cost of cutting anchor bolts included with structural steel removal.)

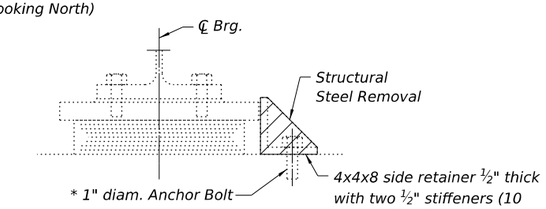

NORTH BEARING DETAIL

Note:
For additional structural steel removal details and quantities, see sheet 18 of 28.

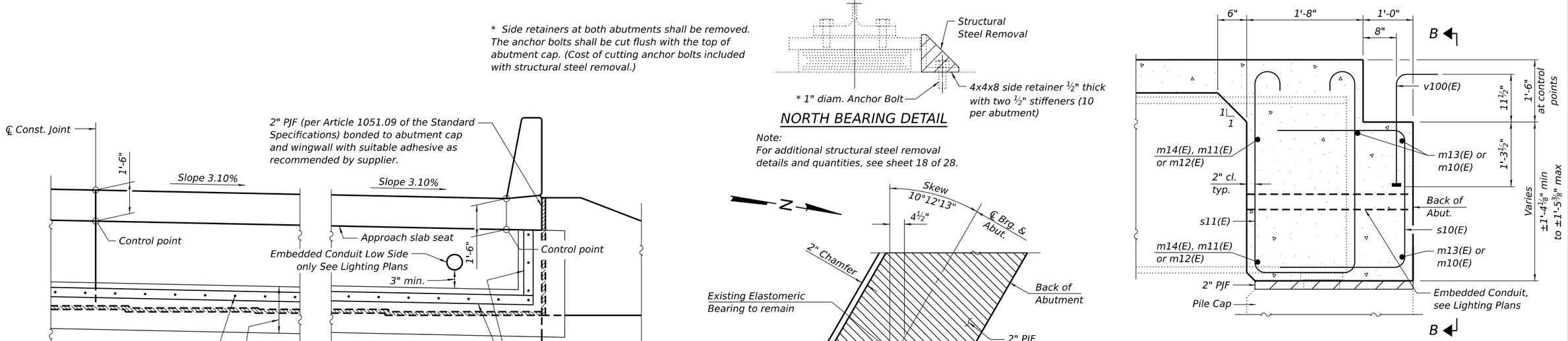

VIEW B-B

Notes:
Cost of fabric reinforced elastomeric mat, galvanized plate, stainless steel expansion bolts with nuts and washers and installation are included in the cost of Concrete Superstructure.
All spalls of pile cap corners that may have occured prior to or during concrete removal shall be repaired by the direction of the engineer prior to placing the 2" PJF on the pile cap.

TYPICAL PILE CAP PLAN

(Showing bottom flange of beam Bearing & PJF)

SECTION A-A

(at Rt. ∠'s)

BILL OF MATERIAL

ITEM	UNIT	TOTAL
Structural Steel Removal	Pounds	90

Notes:
See sheet 12 of 28 for superstructure details and Bill of Material.
The s10(E) and s11(E) bars shall be placed parallel to the beams. Spacing for these bars shall be at right angles to the beams.
The approach slab seat shall have a constant slope determined from the control points shown.

MODEL: $MODELNAMES
FILE NAME: D876E84-014-0029-DIAPH NORTH.dgn

Jacobs
525 West Monroe
Suite 1600
Chicago, IL 60661
(312) 251-3000

USER NAME = jacobspw18lcs09$	DESIGNED - CJF	REVISED -	
	DRAWN - EAK	REVISED -	
PLOT SCALE = 0.16666667 ' / in.	CHECKED - ED	REVISED -	
PLOT DATE = 12/4/2025	DATE - 2025/10/03	REVISED -	

STATE OF ILLINOIS
DEPARTMENT OF TRANSPORTATION

NORTH DIAPHRAGM DETAILS
STRUCTURE NO. 082–0029

SCALE: NTS | SHEET 15 OF 28 SHEETS | STA. | TO STA.

F.A.I. RTE.	SECTION	COUNTY	TOTAL SHEETS	SHEET NO.
70	Section82-(5,6)RS-2, 60-6RS-2	MADISON & ST. CLAIR	678	458
		CONTRACT NO. 76E84		
		ILLINOIS	FED. AID PROJECT	

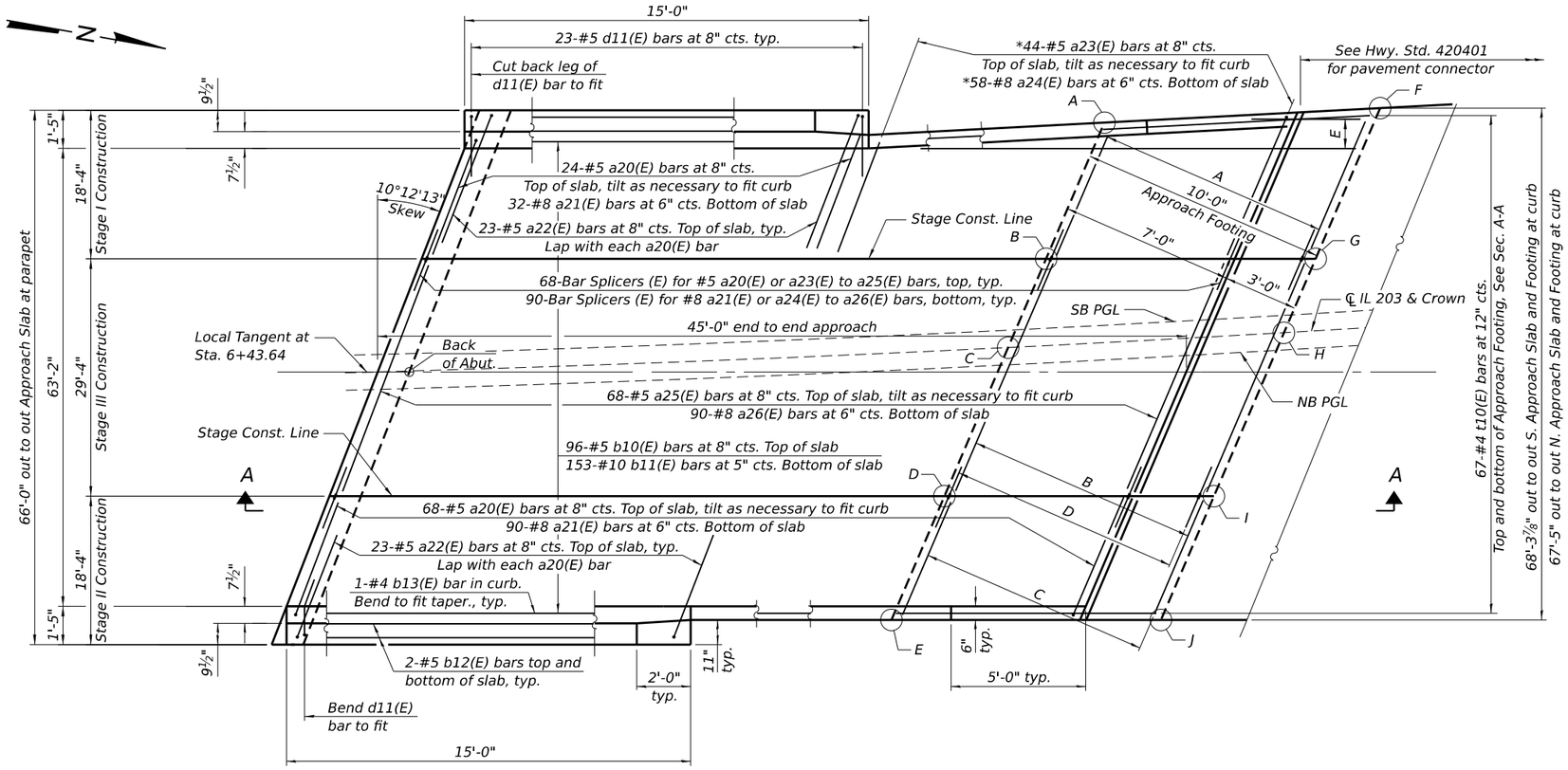

PLAN

(N. approach slab shown; S. approach slab similar)

A = *20-#5 w10(E) bars at 6" cts.
Top and bottom of Approach Footing. See SEC A-A
B = 20-#5 w11(E) bars at 6" cts.
Top and bottom of Approach Footing. See SEC A-A
C = 20-#5 w12(E) bars at 6" cts.
Top and bottom of Approach Footing. See SEC A-A
D = 20-Bar Splicers (E) for #5 bars, Top and bottom of Approach Footing at each stage Const. Line.
E = *4-#5 b14(E) bars at 8" cts. Top of slab, tilt as necessary to fit curb
*7-#10 b15(E) bars at 5" cts. Bottom of slab
**See bar cut diagram on Sheet 17 of 28.

TOP AND BOTTOM ELEVATIONS FOR APPROACH FOOTING

South Approach			North Approach		
Point/ Location	Top	Bottom	Point/ Location	Top	Bottom
A	411.50	410.66	A	414.42	413.59
B	411.99	411.16	B	414.92	414.08
C	412.29	411.46	C	415.28	414.44
D	412.58	411.74	D	415.56	414.73
E	412.96	412.13	E	416.02	415.19
F	411.40	410.57	F	414.64	413.81
G	411.88	411.05	G	415.17	414.33
H	412.14	411.31	H	415.50	414.66
I	412.41	411.58	I	415.79	414.96
J	412.76	411.93	J	416.24	415.41

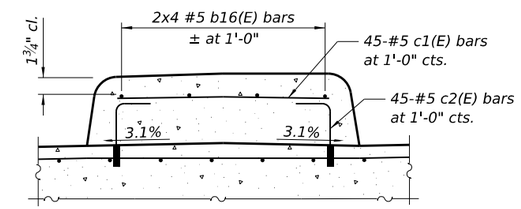

MEDIAN DETAIL

For notes and median details not shown, see sheet 13 of 28.

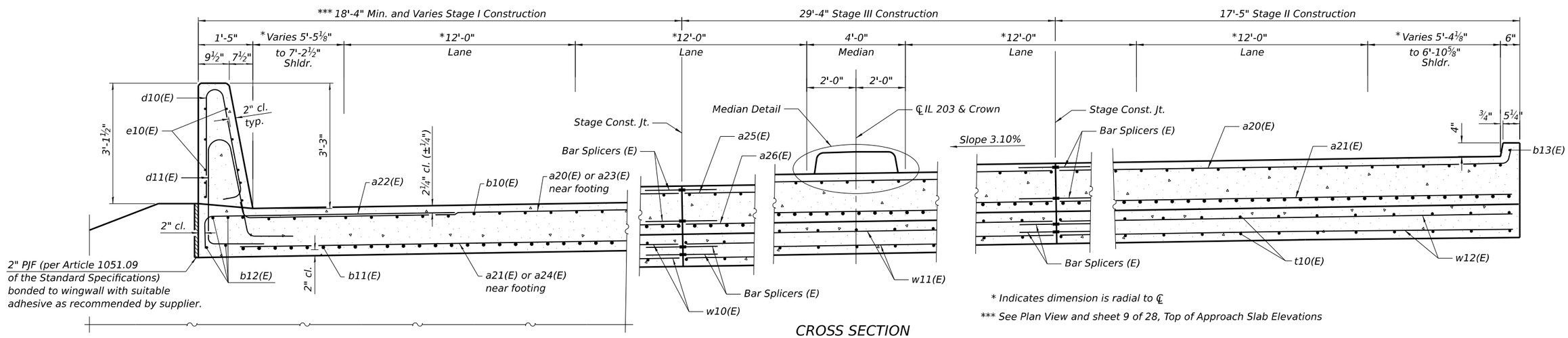

NEAR ABUTMENT

CROSS SECTION

(Looking North)

AT APPROACH FOOTING

* Indicates dimension is radial to ℄

*** See Plan View and sheet 9 of 28, Top of Approach Slab Elevations

MODEL: $MODELNAMES
FILE NAME: D876E84-015-0029-APP SLAB LAYOUT.dgn

Jacobs
525 West Monroe
Suite 1600
Chicago, IL 60661
(312) 251-3000

USER NAME = Jacobspw18lcs10$	DESIGNED - CJF	REVISED -	
	DRAWN - EAK	REVISED -	
PLOT SCALE = 0.16666667 ' / in.	CHECKED - ED	REVISED -	
PLOT DATE = 12/4/2025	DATE - 2025/10/03	REVISED -	

STATE OF ILLINOIS
DEPARTMENT OF TRANSPORTATION

BRIDGE APPROACH SLAB SPECIAL DETAILS
STRUCTURE NO. 082-0029

SCALE: NTS | SHEET 16 OF 28 SHEETS | STA. | TO STA.

F.A.I. RTE.	SECTION	COUNTY	TOTAL SHEETS	SHEET NO.
70	Section82-(5,6)RS-2, 60-6RS-2	MADISON & ST. CLAIR	678	459

CONTRACT NO. 76E84
ILLINOIS | FED. AID PROJECT

Notes:

The joint opening shall be adjusted for temperature per Article 520.04 of the Standard Specifications. However, since this detail is for jointless structures, the length of bridge used to calculate the adjustment shall be equal to half the total bridge length plus the length of the bridge approach slab.

Parapet concrete shall be paid for as Concrete Superstructure.

Approach slab shall be paid for as Concrete Superstructure (Approach Slab) Special.

Approach footing concrete shall be paid for as Concrete Structures.

The approach footing maximum applied service bearing pressure (Qmax) = 2.0 ksf.

Cost of excavation for approach footing included with Concrete Structures.

For Granular Backfill for Structures and drainage treatment details, see sheet 2 of 28.

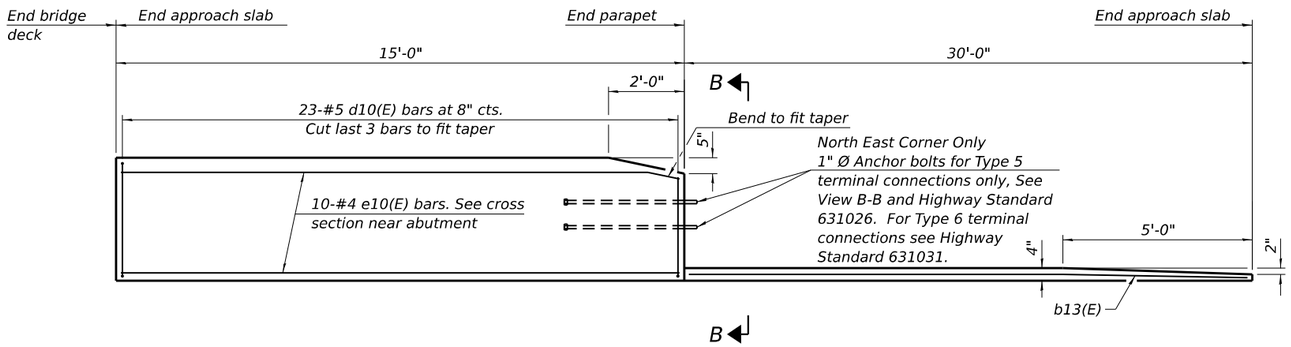

INSIDE ELEVATION OF PARAPET AND CURB

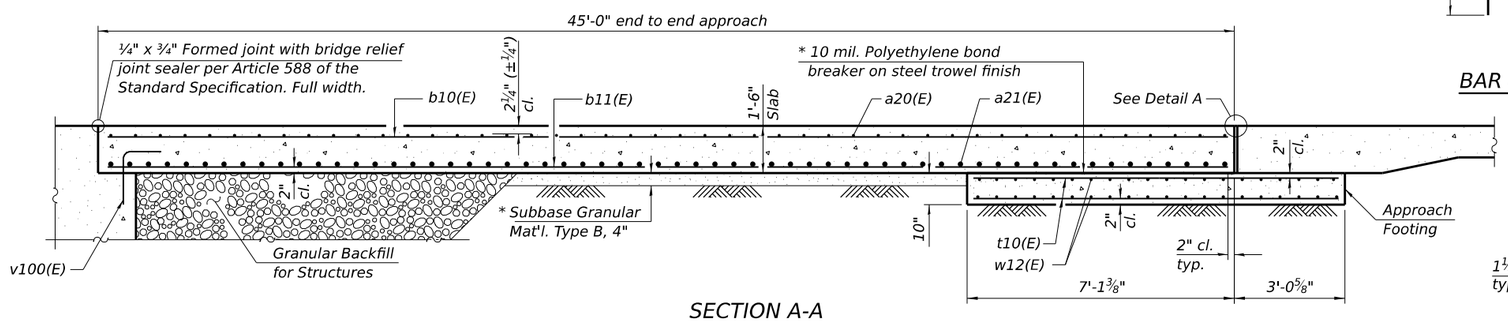

SECTION A-A

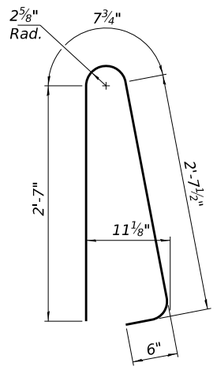

BAR d10(E)

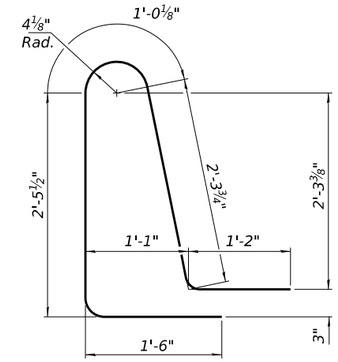

BAR d11(E)

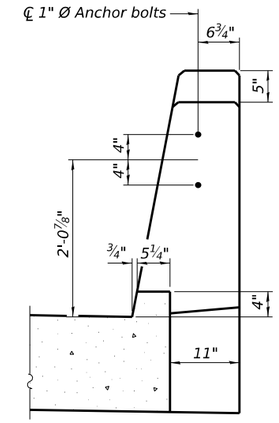

VIEW B-B

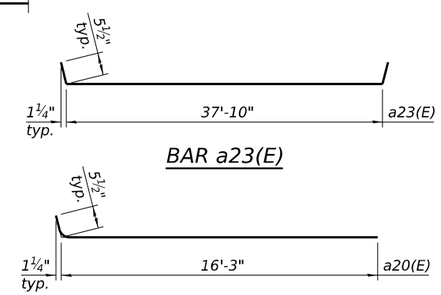

BAR a23(E)

BAR a20(E)

TWO APPROACHES BILL OF MATERIAL

Bar	No.	Size	Length	Shape
a20(E)	184	#5	16'-8"	
a21(E)	244	#8	16'-3"	
a22(E)	92	#5	7'-4"	
a23(E)	44	#5	38'-9"	
a24(E)	58	#8	37'-10"	
a25(E)	136	#5	29'-6"	
a26(E)	180	#8	29'-6"	
b10(E)	192	#5	44'-8"	
b11(E)	306	#10	44'-8"	
b12(E)	16	#5	14'-8"	
b13(E)	4	#4	14'-8"	
b14(E)	4	#5	29'-9"	
b15(E)	7	#10	29'-9"	
b16(E)	16	#5	24'-5"	
c1(E)	90	#5	2'-7"	
c2(E)	180	#5	1'-4"	
d10(E)	92	#5	6'-5"	
d11(E)	92	#5	8'-6"	
e10(E)	40	#4	14'-8"	
t10(E)	268	#4	9'-10"	
w10(E)	40	#5	40'-8"	
w11(E)	80	#5	18'-4"	
w12(E)	80	#5	29'-6"	
Concrete Superstructure			Cu. Yd.	7.8
Concrete Superstructure (Approach Slab), Special			Cu. Yd.	333.1
Concrete Structures			Cu. Yd.	42.5
Reinforcement Bars, Epoxy Coated			Pound	119,720

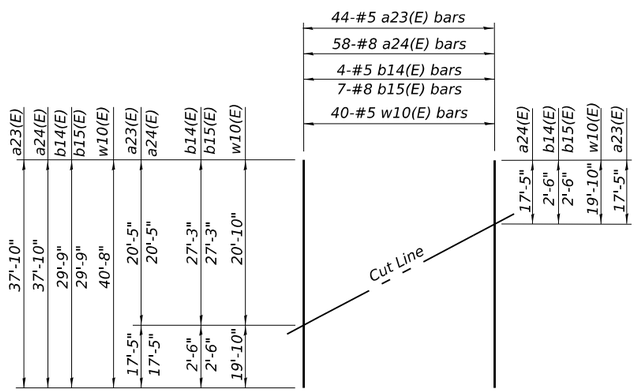

FIELD CUTTING DIAGRAMS

Order a23(E), a24(E), b14(E), b15(E), and w10(E) bars full length.
Cut a23(E), a24(E), b14(E), and b15(E) bars and use remainder of bars in South Approach Slab.
Cut w10(E) bars and use remainder of bars in bottom mat.

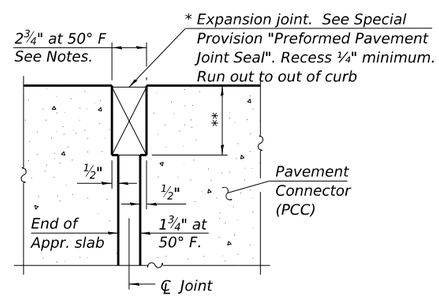

DETAIL A
(at Rt. ∠'s)

* Cost included with Concrete Superstructure (Approach Slab).

** Per manufacturer recommendations

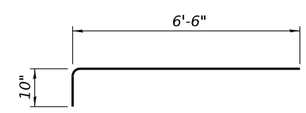

BAR a22(E)

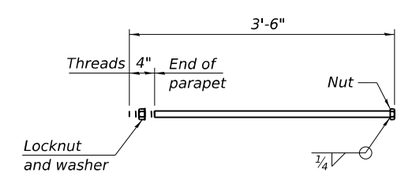

* 1" Ø ANCHOR BOLT
(Anchor bolt assemblies shall be galvanized according to Article 1006.09 of the Standard Specifications)

MODEL: $MODELNAME$
FILE NAME: D876E84-016-0029-APP SLAB DET.dgn

Jacobs
525 West Monroe
Suite 1600
Chicago, IL 60661
(312) 251-3000

USER NAME = jacobspw18lcs09$	DESIGNED - CJF	REVISED -	
	DRAWN - EAK	REVISED -	
PLOT SCALE = 0.16666667 ' / in.	CHECKED - ED	REVISED -	
PLOT DATE = 12/4/2025	DATE - 2025/10/03	REVISED -	

STATE OF ILLINOIS
DEPARTMENT OF TRANSPORTATION

BRIDGE APPROACH SLAB SPECIAL DETAILS
STRUCTURE NO. 082–0029

SCALE: NTS | SHEET 17 OF 28 SHEETS | STA. | TO STA.

F.A.I. RTE.	SECTION	COUNTY	TOTAL SHEETS	SHEET NO.
70	Section82-(5,6)RS-2, 60-6RS-2	MADISON & ST. CLAIR	678	460
		CONTRACT NO. 76E84		
		ILLINOIS FED. AID PROJECT		

BILL OF MATERIAL

ITEM	UNIT	TOTAL
Stud Shear Connectors	Each	4,410
Structural Steel Removal	Pound	4,900

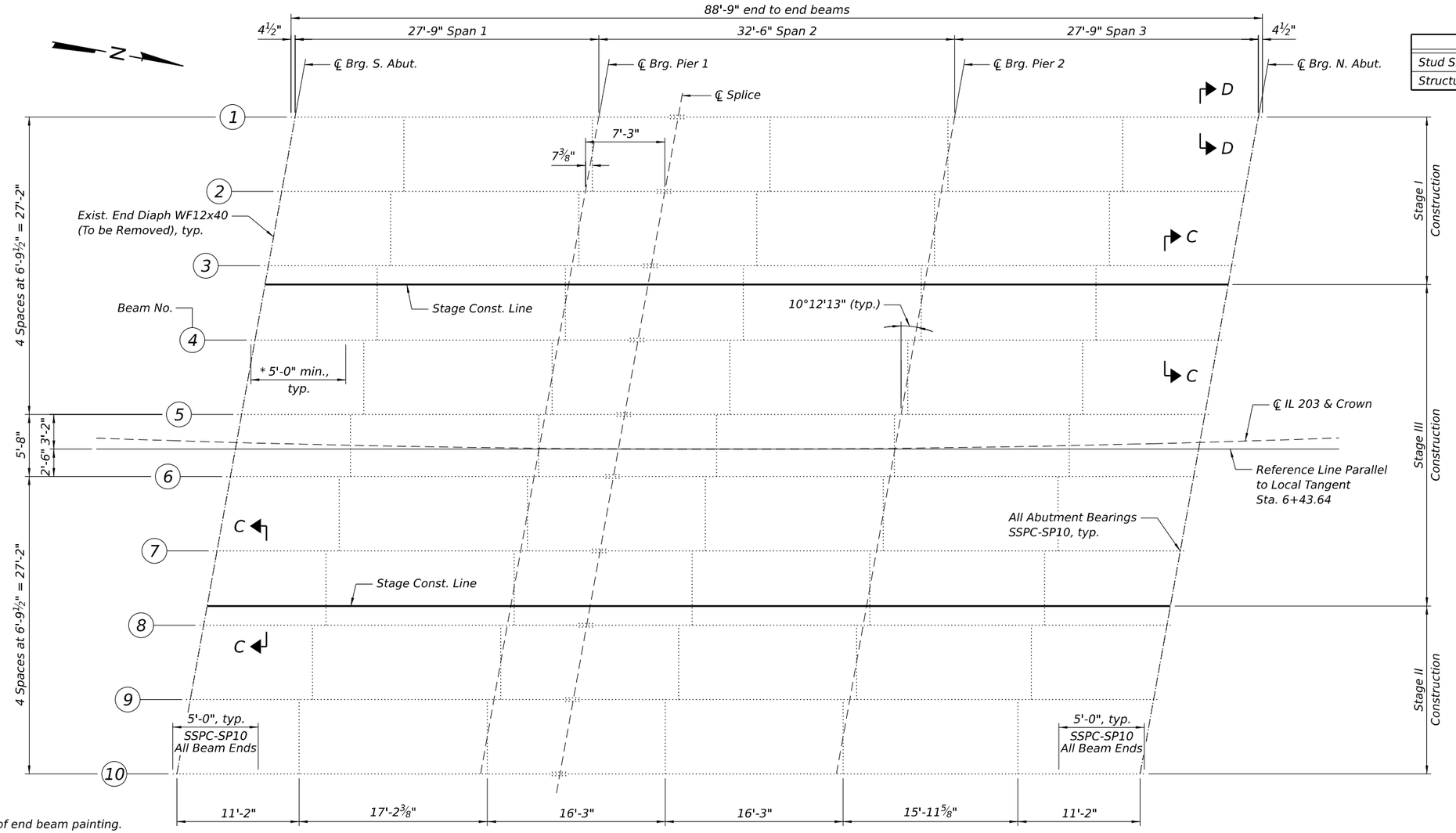

* Limits of end beam painting.
All Girders each end.

FRAMING PLAN

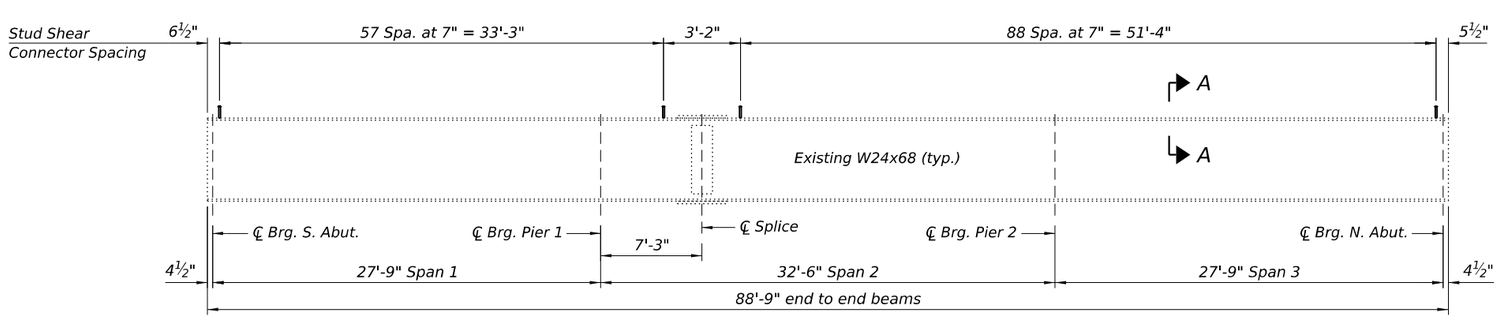

BEAM ELEVATION

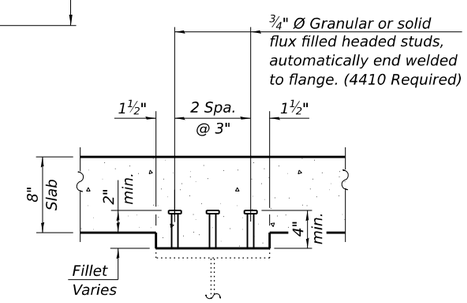

SECTION A-A

Note:
For Sections C-C & D-D, see Sheet 19 of 28.
Section C-C provides a stage construction condition of end Diaphragms.

MODEL: $MODELNAME$
FILE NAME: D876E84-017-0029-STRUCT STEEL.dgn

Jacobs
525 West Monroe
Suite 1600
Chicago, IL 60661
(312) 251-3000

USER NAME = jacobspw18lcs09$	DESIGNED - CJF	REVISED -	
	DRAWN - EAK	REVISED -	
PLOT SCALE = 0.16666667 ' / in.	CHECKED - ED	REVISED -	
PLOT DATE = 12/4/2025	DATE - 2025/10/03	REVISED -	

STATE OF ILLINOIS
DEPARTMENT OF TRANSPORTATION

STRUCTURAL STEEL
STRUCTURE NO. 082-0029

SCALE: NTS | SHEET 18 OF 28 SHEETS | STA. | TO STA.

F.A.I. RTE.	SECTION	COUNTY	TOTAL SHEETS	SHEET NO.
70	Section82-(5,6)RS-2, 60-6RS-2	MADISON & ST. CLAIR	678	461

CONTRACT NO. 76E84
ILLINOIS | FED. AID PROJECT

Symmetrical 3 span

INTERIOR BEAM MOMENT TABLE				
		0.4 Sp. 1 or 0.6 Sp. 3	Pier	0.5 Sp. 2
I_s	(in^4)	1,830	1,830	1,830
I_c (n)	(in^4)	7,594	———	7,594
I_c (3n)	(in^4)	5,821	———	5,821
I_c (cr)	(in^4)	———	3,497	———
S_s	(in^3)	154	154	154
S_c (n)	(in^3)	286	———	286
S_c (3n)	(in^3)	260	———	260
S_c (cr)	(in^3)	———	214	———
S_x	(in^3)	———	———	———
DC1	(k/')	0.838	0.838	0.838
M_{DC1}	('k)	44	70	33
DC2	(k/')	0.175	0.175	0.175
M_{DC2}	('k)	10	16	7
DW	(k/')	0.158	0.158	0.158
M_{DW}	('k)	9	14	6
LLDF		0.640	0.626	0.614
M_{LL+IM}	('k)	240	193	219
f_ℓ (Strength I)	(ksi)	0	0	0
$M_u + \frac{1}{3} f_\ell S_x$	('k)	501	466	442
$\Phi_f M_n$	('k)	1048	485	1066
f_s DC1	(ksi)	3.44	5.49	2.56
f_s DC2	(ksi)	0.42	0.87	0.28
f_s DW	(ksi)	0.38	0.78	0.25
f_s (LL+IM)	(ksi)	10.06	10.82	9.18
f_ℓ (Service II)	(ksi)	0.00	0.00	0.00
$f_s + {}^{f_\ell}/_2$ (Service II)	(ksi)	17.31	21.21	15.02
Service II Resistance	(ksi)	34.20	28.80	34.20
$f_s + {}^{f_\ell}/_3$ (Strength I)	(ksi)	———	———	———
$\Phi_f F_n$	(ksi)	———	———	———
V_f	(k)	41	134	41

INTERIOR BEAM REACTION TABLE			
		Abut.	Pier
LLDF		0.763	0.763
OCF		1.047	1.047
R_{DC1}	(k)	9.6	30.5
R_{DC2}	(k)	1.85	5.84
R_{DW}	(k)	1.67	5.28
R_{LL}	(k)	40.9	64.5
R_{Im}	(k)	11.5	15.5
R_{Total}(Strength I)(Impact)	(k)	108.4	193.3
R_{Total}(Strength I)(No Impact)	(k)	88.4	166.2

I_s , S_s : Non-composite moment of inertia and section modulus of the steel section used for computing f_s (Total-Strength I, and Service II) due to non-composite dead loads (in.⁴ and in.³).

I_c (n), S_c (n): Composite moment of inertia and section modulus of the steel and deck based upon the modular ratio, "n", used for computing f_s (Total-Strength I, and Service II) in uncracked sections due to short-term composite live loads (in.⁴ and in.³).

I_c (3n), S_c (3n): Composite moment of inertia and section modulus of the steel and deck based upon 3 times the modular ratio, "3n", used for computing f_s (Total-Strength I, and Service II) in uncracked sections, due to long-term composite (superimposed) dead loads (in.⁴ and in.³).

I_c (cr), S_c (cr): Composite moment of inertia and section modulus of the steel and longitudinal deck reinforcement, used for computing f_s (Total-Strength I and Service II) in cracked sections, due to both short-term composite live loads and long-term composite (superimposed) dead loads (in.⁴ and in.³).

S_x : Section modulus about the major axis of a section to the controlling flange, tension or compression, taken as yield moment with respect to the controlling flange over the yield strength of the controlling flange (in.³).

DC1: Un-factored non-composite dead load (kips/ft.).

M_{DC1}: Un-factored moment due to non-composite.

DC2: Un-factored long-term composite (superimposed excluding future wearing surface) dead load (kips/ft.).

M_{DC2}: Un-factored moment due to long-term composite (superimposed excluding future wearing surface) dead load (kip-ft.).

DW: Un-factored long-term composite (superimposed future wearing surface only) dead load (kips/ft.).

M_{DW} : Un-factored moment due to long-term composite (superimposed future wearing surface only) dead load (kip-ft.).

LLDF: Live Load Distribution Factor for moment and shear computed according to Article 4.6.2.2 and further IDOT provisions.

M_{LL+IM}: Un-factored live load moment plus dynamic load allowance (impact) (kip-ft.).

M_u : Strength I load combination of factored design moments (kip-ft.).
$1.25 (M_{DC1} + M_{DC2}) + 1.5 M_{DW} + 1.75 M_{LL+IM}$

f_ℓ : Factored calculated flange lateral bending stress as calculated using Article 6.10.1.6 and as further simplified by IDOT provisions (ksi).

$\Phi_f M_n$: Factored nominal flexural resistance of the section determined as specified in Article 6.10.7.1 or A6 as applicable (kip-ft.).

f_s DC1: Un-factored stress at edge of flange for controlling steel flange due to vertical non-composite dead loads as calculated below (ksi).
M_{DC1} / S_s

f_s DC2: Un-factored stress at edge of flange for controlling steel flange due to vertical composite dead loads as calculated below (ksi).
M_{DC2} / S_c (3n) or M_{DC2} / S_c (cr) as applicable.

f_s DW: Un-factored stress at edge of flange for controlling steel flange due to vertical composite future wearing surface loads as calculated below (ksi).
M_{DW} / S_c (3n) or M_{DW} / S_c (cr) as applicable.

f_s (LL+ IM): Un-factored stress at edge of flange for controlling steel flange due to vertical composite live load plus impact loads as calculated below (ksi).
M_{LL+IM} / S_c (n) or M_{LL+IM} / S_c (cr) as applicable.

$f_s + f_\ell / 2$ (Service II): Sum of stresses as computed below (ksi).
f_s DC1 + f_s DC2 + f_s DW + 1.3 f_s (LL+ IM) + f_ℓ /2

Service II Resistance: Composite ($0.95R_hF_{yf}$) or noncomposite ($0.80R_hF_{yf}$) stress capacity according to Article 6.10.4.2 (ksi).

$f_s + f_\ell / 3$ (Strength I): Sum of stresses as computed below on non-compact sections (ksi).
1.25 (f_s DC1 + f_s DC2) + 1.5 f_s DW + 1.75 f_s (LL+ IM) + f_ℓ /3

$\Phi_f F_n$: Factored nominal flexural resistance of the section as specified in Article 6.10.7.2 or 6.10.8 as applicable (ksi).

V_f: Maximum factored shear range in span computed according to Article 6.10.10.

OCF: Obtuse Correction Factor according to Article 4.6.2.2.3c or as further simplified by IDOT provisions.

R_{DC1}: Un-factored reaction due to non-composite dead load (kip).

R_{DC2}: Un-factored reaction due to long-term composite (superimposed excluding future wearing surface) dead load (kip).

R_{DW} : Un-factored reaction due to long-term composite (superimposed future wearing surface only) dead load (kip).

R_{LL} : Un-factored live load reaction (kip).

R_{IM} : Un-factored dynamic load allowance (impact) (kip).

R_{Total}(Strength I)(Impact): Strength I load combination of factored design reactions (kip).
1.25 ($R_{DC1} + R_{DC2}$) + 1.5R_{DW} + 1.75 ($R_{LL} + R_{IM}$)

R_{Total}(Strength I)(No Impact): Strength I load combination of factored design reactions, not including dynamic load allowance (Impact) (kip).
1.25 ($R_{DC1} + R_{DC2}$) + 1.5R_{DW} + 1.75 (R_{LL})

Notes:
M_{LL} and R_{LL} include the effects of centrifugal force and superelevation.

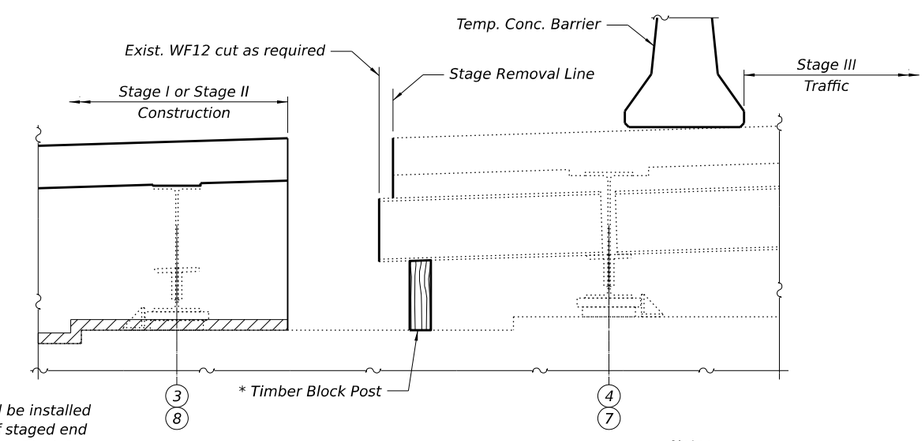

* Timber Block Posts shall be installed prior to partial removal of staged end diaphragms. Cost of Timber Block Posts, installation and removal is included in Structural Steel Removal.

SECTION C-C
STAGED END DIAPHRAGM

Notes:
Existing End Diaphragms on stage line are to be temporarily supported with timber block posts.

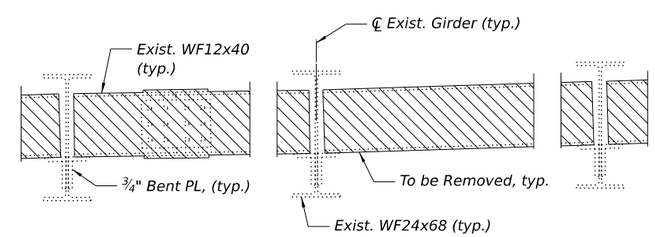

SECTION D-D

MODEL: $MODELNAME$
FILE NAME: D876E84-018-00229-STRUCT STEEL DET.dgn

Jacobs
525 West Monroe
Suite 1600
Chicago, IL 60661
(312) 251-3000

USER NAME = jacobspw18lcs11$	DESIGNED - CJF	REVISED -	
	DRAWN - EAK	REVISED -	
PLOT SCALE = 0.16666667 ' / in.	CHECKED - ED	REVISED -	
PLOT DATE = 12/4/2025	DATE - 2025/10/03	REVISED -	

STATE OF ILLINOIS
DEPARTMENT OF TRANSPORTATION

STRUCTURAL STEEL DETAILS
STRUCTURE NO. 082–0029

SCALE: NTS | SHEET 19 OF 28 SHEETS | STA. | TO STA.

F.A.I. RTE.	SECTION	COUNTY	TOTAL SHEETS	SHEET NO.
70	Section82-(5,6)RS-2, 60-6RS-2	MADISON & ST. CLAIR	678	462

CONTRACT NO. 76E84
ILLINOIS | FED. AID PROJECT

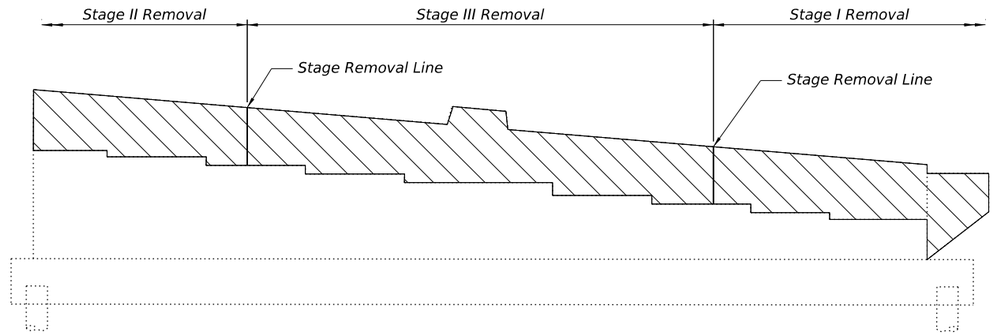

ELEVATION
(Looking South)

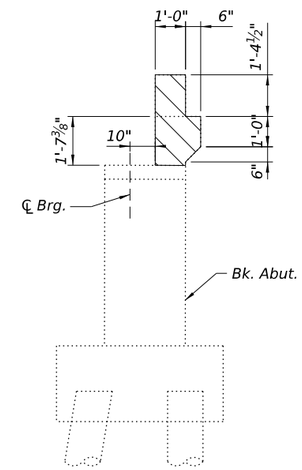

SECTION A-A
Dimensions at Rt.
∠'s to Bk. Wall

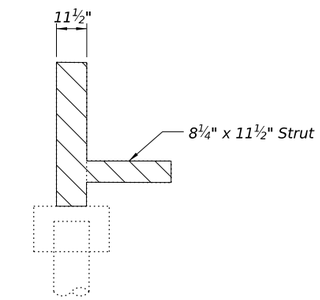

SECTION B-B

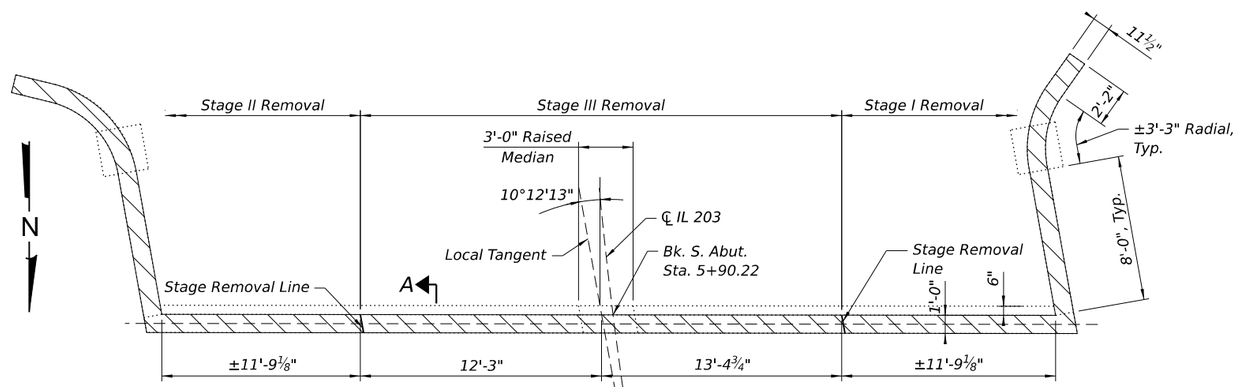

TOP PLAN

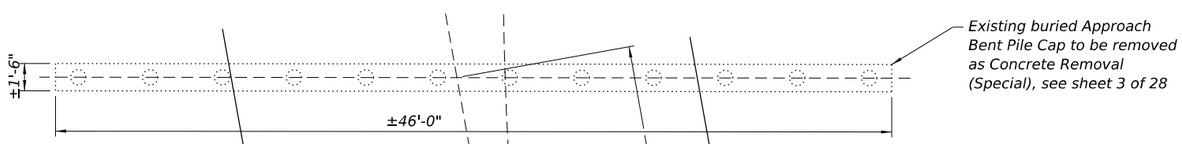

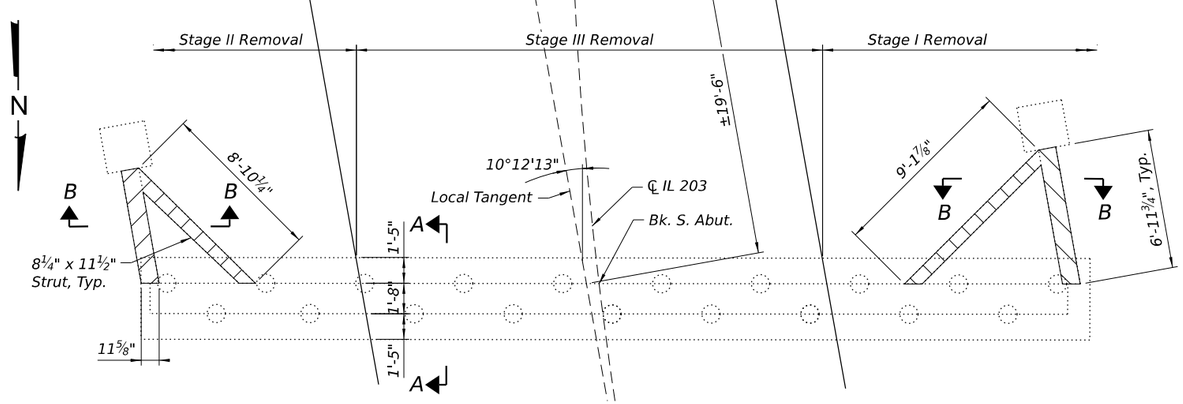

PLAN - PILE CAP

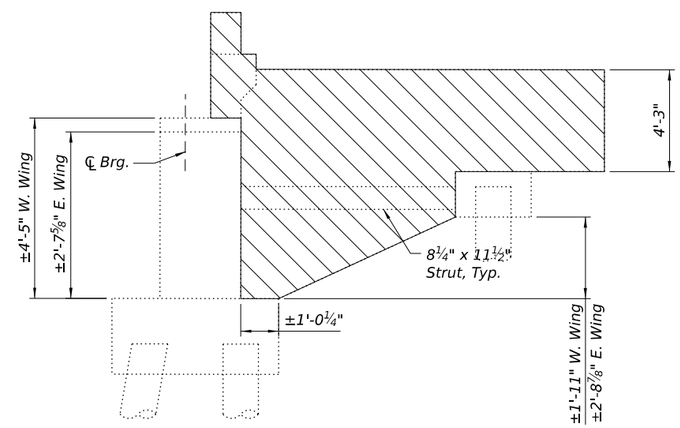

ELEVATION - WINGWALL REMOVAL

Note:
Reinforcement bars exposed at the surface after concrete removal is complete shall be cut flush with the remaining concrete surface. Grind existing exposed steel smooth and seal with epoxy. Cost included with Concrete Removal.
Hatched areas indicate Concrete Removal.
Any reinforcement bars that are damaged during concrete removal operation shall be repaired or replaced using an approved bar splicer or anchorage system. Cost included with "Concrete Removal".

BILL OF MATERIAL

ITEM	UNIT	TOTAL
Concrete Removal	Cu. Yd.	19.8
Concrete Removal (Special)	Cu. Yd.	4.0

MODEL: $MODELNAMES
FILE NAME: D876E84-019-0029-SOUTH ABUT DEMO.dgn

Jacobs
525 West Monroe
Suite 1600
Chicago, IL 60661
(312) 251-3000

USER NAME = Jacobspw18lcs10$	DESIGNED - CJF	REVISED -	
	DRAWN - EAK	REVISED -	
PLOT SCALE = 0.16666667 ' / in.	CHECKED - ED	REVISED -	
PLOT DATE = 12/4/2025	DATE - 2025/10/03	REVISED -	

STATE OF ILLINOIS
DEPARTMENT OF TRANSPORTATION

SOUTH ABUTMENT REMOVAL DETAILS
STRUCTURE NO. 082-0029

SCALE: NTS | SHEET 20 OF 28 SHEETS | STA. | TO STA.

F.A.I. RTE.	SECTION	COUNTY	TOTAL SHEETS	SHEET NO.
70	Section82-(5,6)RS-2, 60-6RS-2	MADISON & ST. CLAIR	678	463

CONTRACT NO. 76E84
ILLINOIS | FED. AID PROJECT

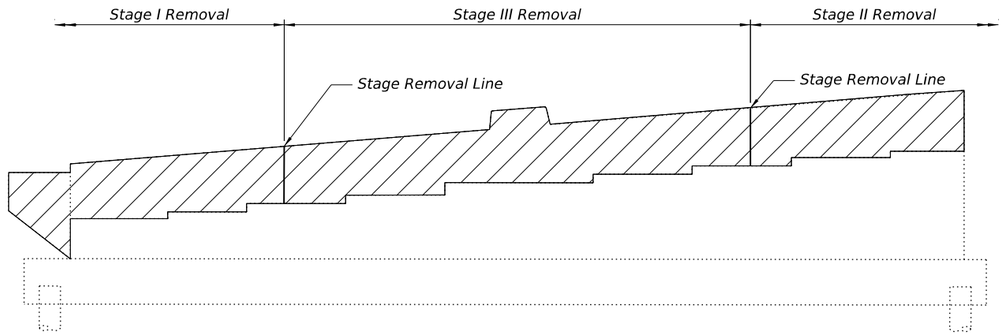

ELEVATION
(Looking North)

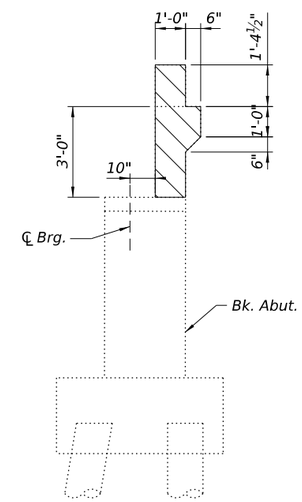

SECTION A-A
Dimensions at Rt.
∠'s to Bk. Wall

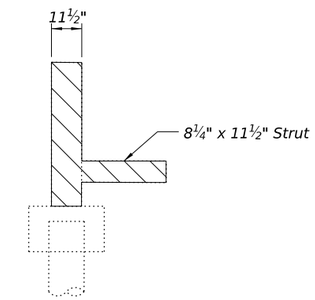

SECTION B-B

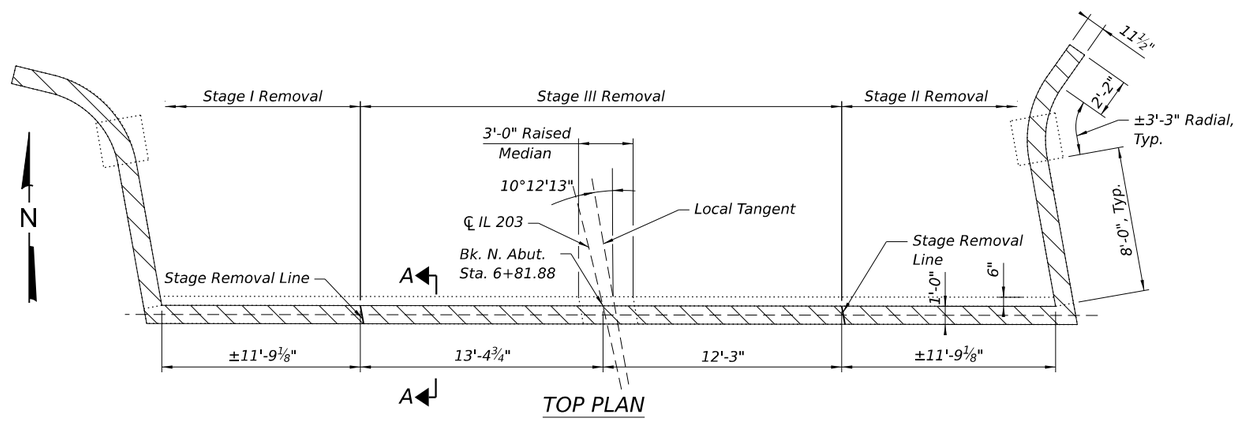

TOP PLAN

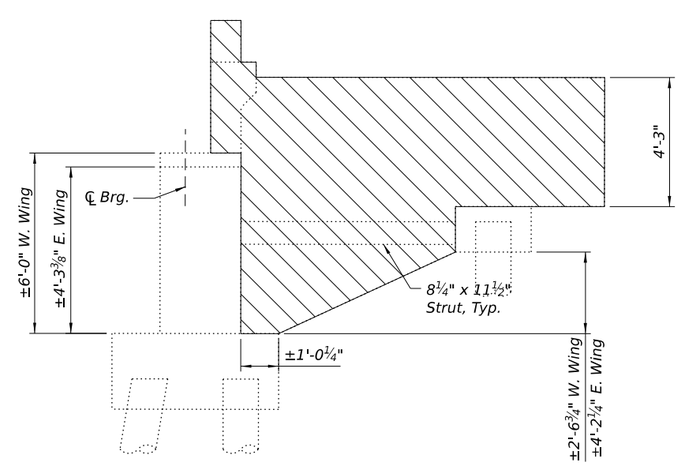

ELEVATION - WINGWALL REMOVAL

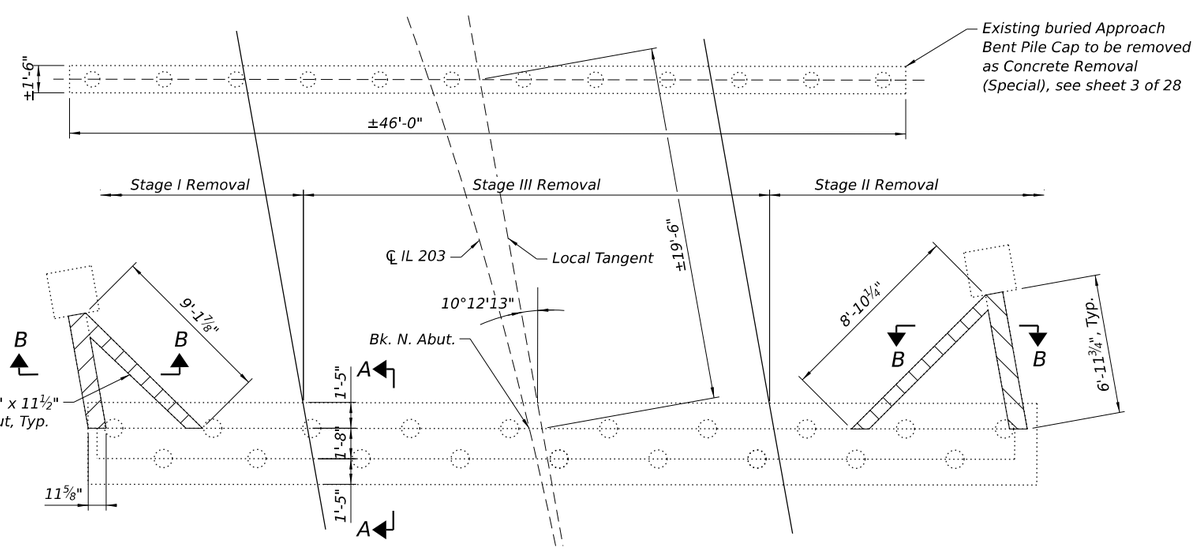

PLAN - PILE CAP

BILL OF MATERIAL

ITEM	UNIT	TOTAL
Concrete Removal	Cu. Yd.	22.8
Concrete Removal (Special)	Cu. Yd.	4.0

Note:
Reinforcement bars exposed at the surface after concrete removal is complete shall be cut flush with the remaining concrete surface. Grind existing exposed steel smooth and seal with epoxy. Cost included with Concrete Removal.
Hatched areas indicate Concrete Removal.
Any reinforcement bars that are damaged during concrete removal operation shall be repaired or replaced using an approved bar splicer or anchorage system. Cost included with "Concrete Removal".

MODEL: $MODELNAMES
FILE NAME: D876E84-020-0029-NORTH ABUT DEMO.dgn

Jacobs
525 West Monroe
Suite 1600
Chicago, IL 60661
(312) 251-3000

USER NAME = jacobspw18ics09$	DESIGNED - CJF	REVISED -	
	DRAWN - EAK	REVISED -	
PLOT SCALE = 0.16666667 ' / in.	CHECKED - ED	REVISED -	
PLOT DATE = 12/4/2025	DATE - 2025/10/03	REVISED -	

STATE OF ILLINOIS
DEPARTMENT OF TRANSPORTATION

NORTH ABUTMENT REMOVAL DETAILS
STRUCTURE NO. 082-0029

SCALE: NTS | SHEET 21 OF 28 SHEETS | STA. | TO STA.

F.A.I. RTE.	SECTION	COUNTY	TOTAL SHEETS	SHEET NO.
70	Section82-(5,6)RS-2, 60-6RS-2	MADISON & ST. CLAIR	678	464

CONTRACT NO. 76E84
ILLINOIS | FED. AID PROJECT

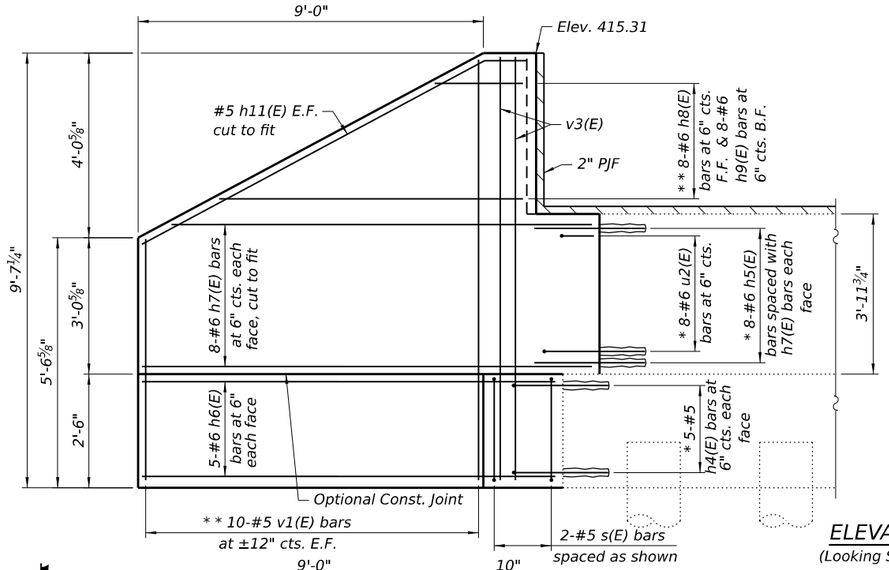

ELEVATION
(Looking South)

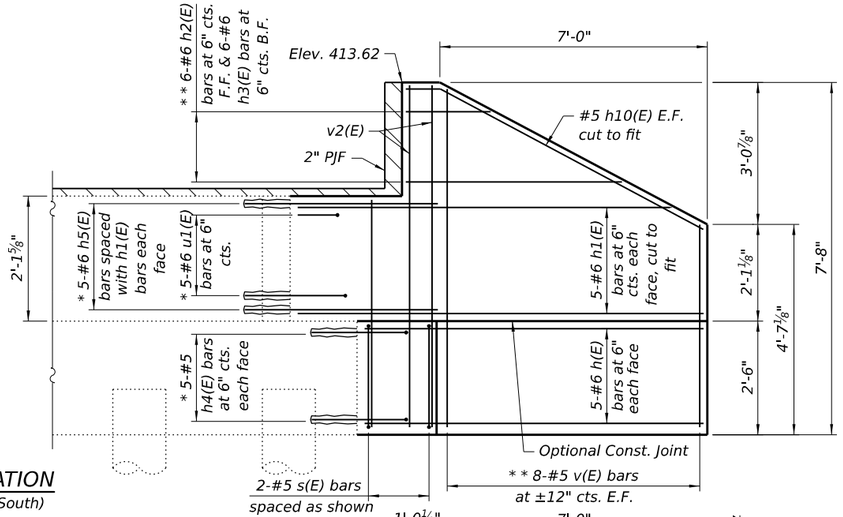

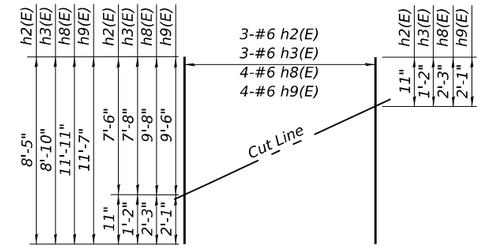

FIELD CUTTING DIAGRAM
Order h2(E), h3(E), h8(E), and h9(E) bars full length. Cut as shown and use remainder of bars in upper wing.

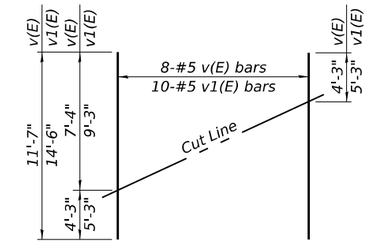

FIELD CUTTING DIAGRAM
Order v(E) and v1(E) bars full length. Cut as shown and use the remainder of bars in opposite face.

MINIMUM BAR LAP
#6 bar = 3'-3"

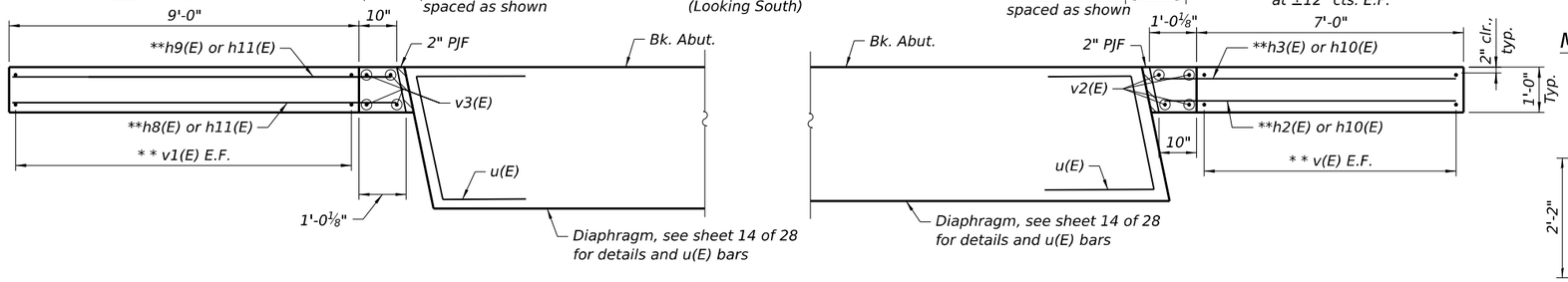

TOP OF WALL PLAN

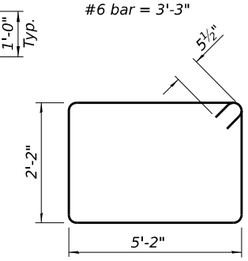

BAR s(E)

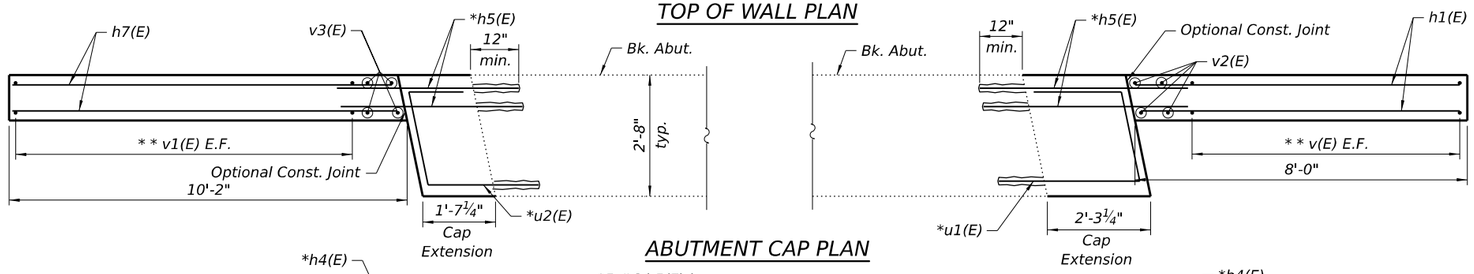

ABUTMENT CAP PLAN

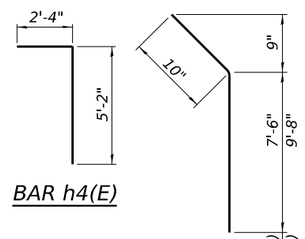

BAR h4(E)

BAR h10(E) & h11(E)

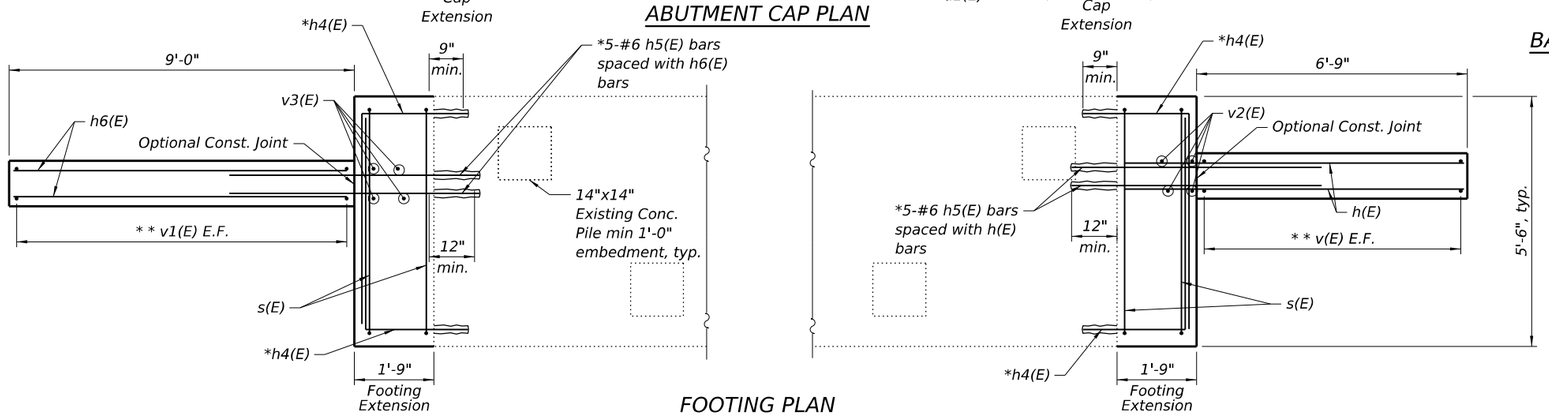

FOOTING PLAN

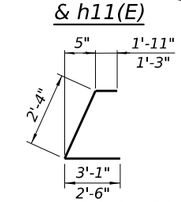

BAR u1(E) & u2(E)

BILL OF MATERIAL

Bar	No.	Size	Length	Shape
h(E)	10	#6	8'-2"	
h1(E)	10	#6	7'-10"	
h2(E)	3	#6	8'-5"	
h3(E)	3	#6	8'-10"	
h4(E)	20	#5	7'-6"	
h5(E)	46	#6	6'-6"	
h6(E)	10	#6	10'-5"	
h7(E)	16	#6	9'-10"	
h8(E)	4	#6	11'-11"	
h9(E)	4	#6	11'-7"	
h10(E)	2	#5	8'-4"	
h11(E)	2	#5	10'-6"	
s(E)	4	#5	15'-7"	
u1(E)	5	#6	7'-4"	
u2(E)	8	#6	6'-1"	
v(E)	8	#5	11'-7"	
v1(E)	10	#5	14'-6"	
v2(E)	4	#5	7'-4"	
v3(E)	4	#5	9'-3"	
Structure Excavation		Cu. Yd.	269	
Concrete Structures		Cu. Yd.	6.9	
Reinforcement Bars, Epoxy Coated		Pound	2010	

Notes:
h5E) bars in footing elevation view are not shown for clarity.
F.F. indicates front face.
B.F. indicates back face.
E.F. indicates each face.

*Epoxy grout bars as detailed drilled holes according to Section 584 of the Standard Specifications. All grouted bars shall have a 4" cl. to the edge of existing concrete.
** See Field Cutting Diagram

MODEL: $MODELNAMES
FILE NAME: D876E84-021-0029-SO ABUT.dgn

Jacobs
525 West Monroe
Suite 1600
Chicago, IL 60661
(312) 251-3000

USER NAME = jacobspw18ics11$	DESIGNED - CJF	REVISED -	
	DRAWN - EAK	REVISED -	
PLOT SCALE = 0.16666667 ' / in.	CHECKED - ED	REVISED -	
PLOT DATE = 12/4/2025	DATE - 2025/10/03	REVISED -	

STATE OF ILLINOIS
DEPARTMENT OF TRANSPORTATION

SOUTH ABUTMENT DETAILS
STRUCTURE NO. 082-0029

SCALE: NTS | SHEET 22 OF 28 SHEETS | STA. | TO STA.

F.A.I. RTE.	SECTION	COUNTY	TOTAL SHEETS	SHEET NO.
70	Section82-(5,6)RS-2, 60-6RS-2	MADISON & ST. CLAIR	678	465
		CONTRACT NO. 76E84		
		ILLINOIS	FED. AID PROJECT	

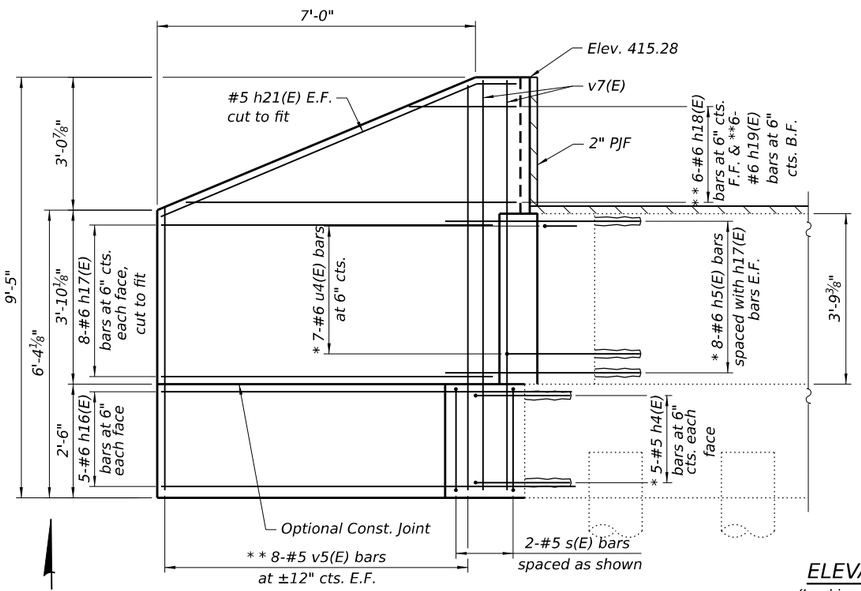

ELEVATION
(Looking North)

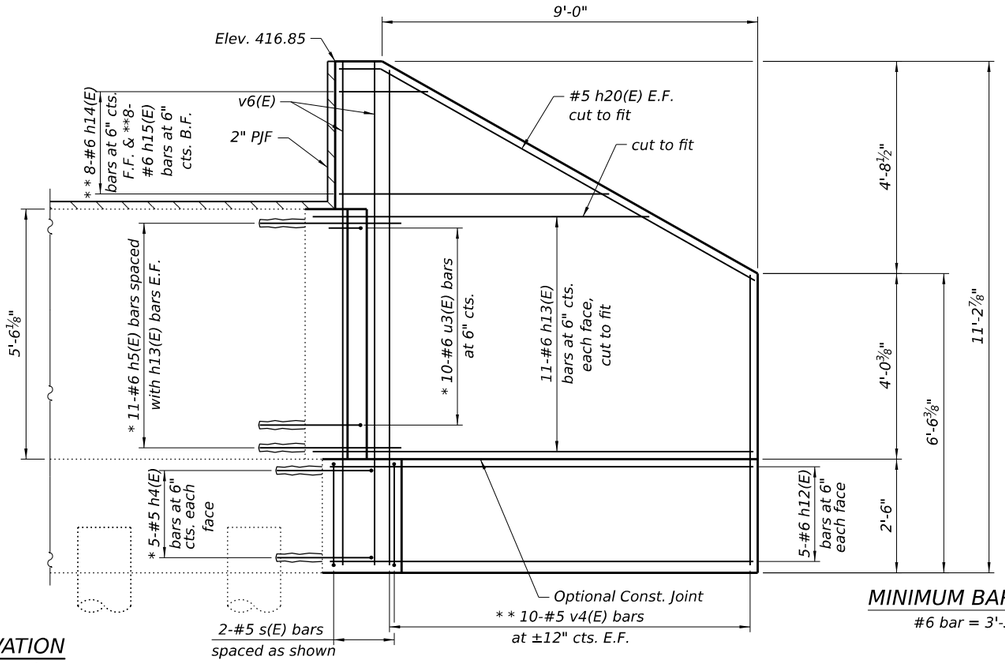

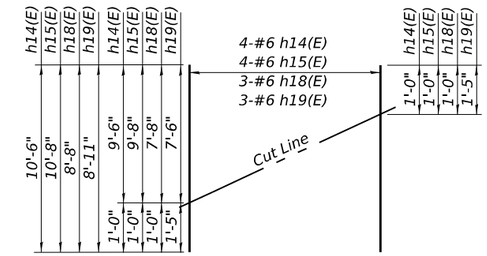

FIELD CUTTING DIAGRAM
Order h14(E), h15(E), h18(E), and h19(E) bars full length. Cut as shown and use remainder of bars in upper wing.

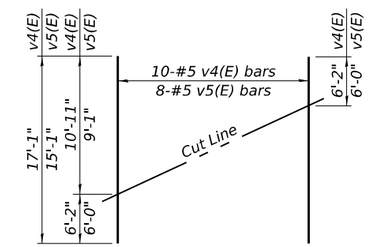

FIELD CUTTING DIAGRAM
Order v4(E) and v5(E) bars full length. Cut as shown and use remainder of bars in opposite face.

MINIMUM BAR LAP
#6 bar = 3'-3"

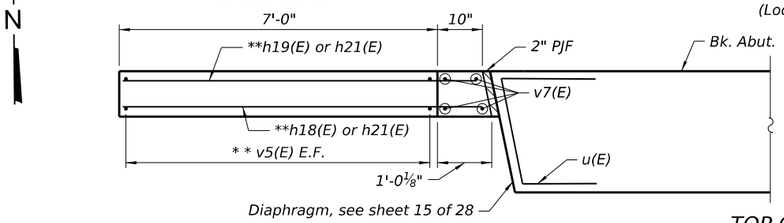

TOP OF WALL PLAN

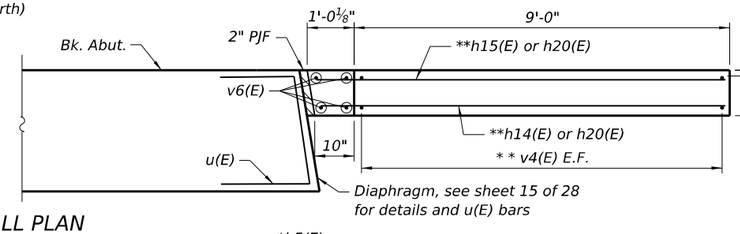

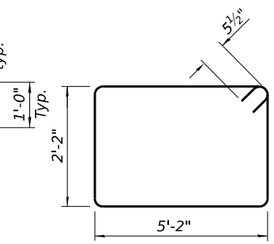

BAR s(E)

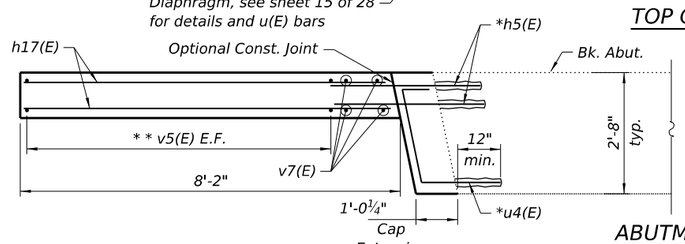

ABUTMENT CAP PLAN

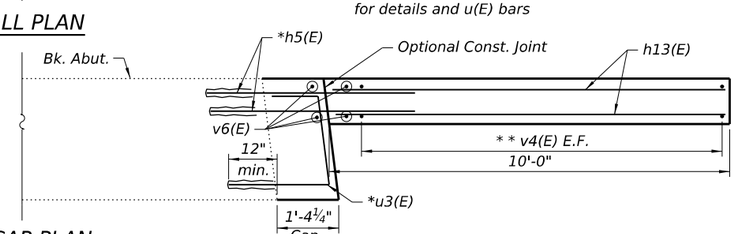

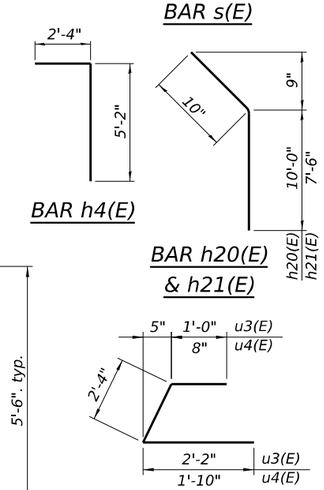

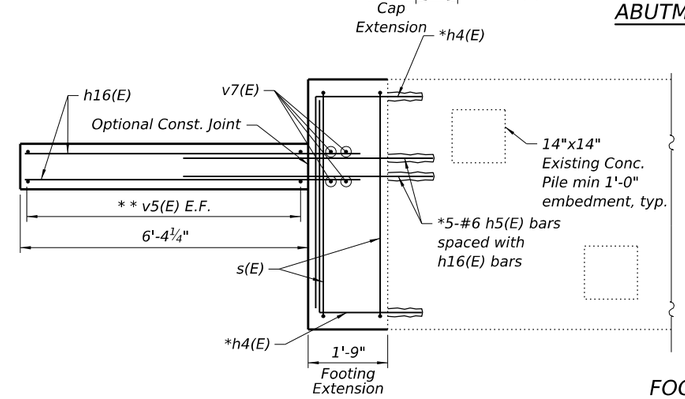

FOOTING PLAN

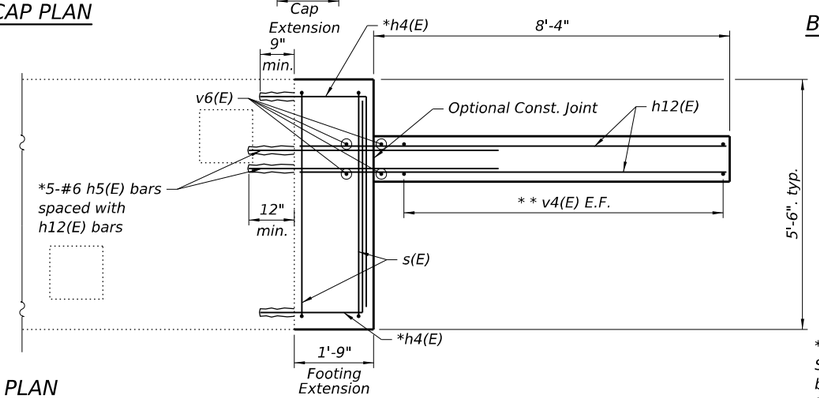

*Epoxy grout bars as detailed drilled holes according to Section 584 of the Standard Specifications. All grouted bars shall have a 4" cl. to the edge of existing concrete.
** See Field Cutting Diagram

BILL OF MATERIAL

Bar	No.	Size	Length	Shape
h4(E)	20	#5	7'-6"	
h5(E)	58	#6	6'-6"	
h12(E)	10	#6	9'-9"	
h13(E)	22	#6	9'-10"	
h14(E)	4	#6	10'-6"	
h15(E)	4	#6	10'-8"	
h16(E)	10	#6	7'-9"	
h17(E)	16	#6	7'-10"	
h18(E)	3	#6	8'-8"	
h19(E)	3	#6	8'-11"	
h20(E)	2	#5	10'-10"	
h21(E)	2	#5	8'-4"	
s(E)	4	#5	15'-7"	
u3(E)	10	#6	5'-6"	
u4(E)	7	#6	4'-10"	
v4(E)	10	#5	17'-1"	
v5(E)	8	#5	15'-1"	
v6(E)	4	#5	10'-11"	
v7(E)	4	#5	9'-1"	
Structure Excavation		Cu. Yd.	348	
Concrete Structures		Cu. Yd.	6.9	
Reinforcement Bars, Epoxy Coated		Pound	2330	

Notes:
h5(E) bars in footing elevation view are not shown for clarity.
F.F. indicates front face.
B.F. indicates back face.
E.F. indicates each face.

MODEL: $MODELNAMES
FILE NAME: D876E84-022-0029-NO ABUT.dgn

Jacobs
525 West Monroe
Suite 1600
Chicago, IL 60661
(312) 251-3000

USER NAME = jacobspw18ics09$	DESIGNED - CJF	REVISED -	
	DRAWN - EAK	REVISED -	
PLOT SCALE = 0.16666667 ' / in.	CHECKED - ED	REVISED -	
PLOT DATE = 12/4/2025	DATE - 2025/10/03	REVISED -	

STATE OF ILLINOIS
DEPARTMENT OF TRANSPORTATION

NORTH ABUTMENT DETAILS
STRUCTURE NO. 082-0029

SCALE: NTS | SHEET 23 OF 28 SHEETS | STA. | TO STA.

F.A.I. RTE.	SECTION	COUNTY	TOTAL SHEETS	SHEET NO.
70	Section82-(5,6)RS-2, 60-6RS-2	MADISON & ST. CLAIR	678	466

CONTRACT NO. 76E84
ILLINOIS | FED. AID PROJECT

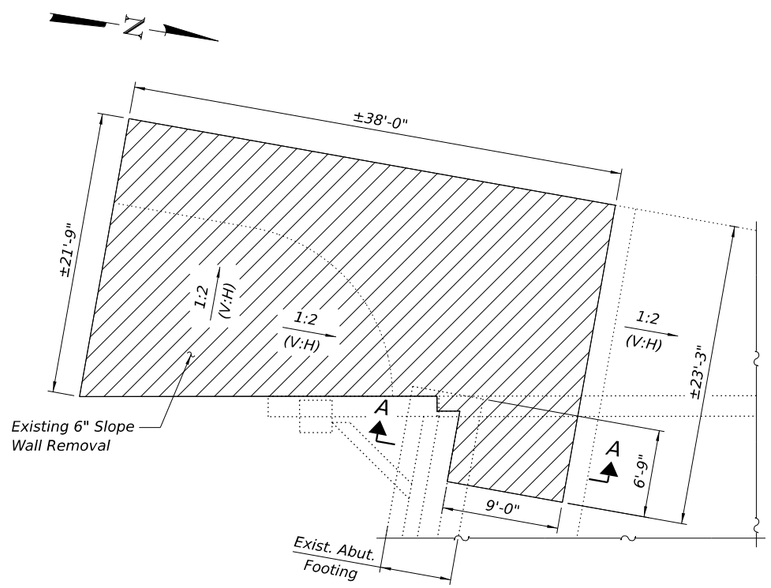

SOUTH ABUTMENT WEST END

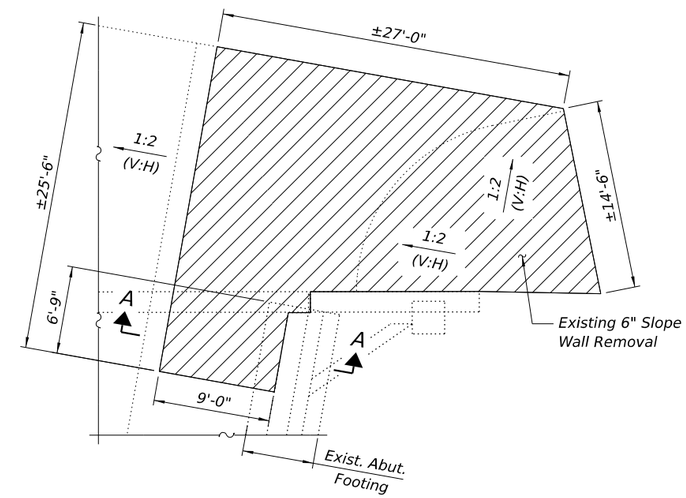

NORTH ABUTMENT WEST END

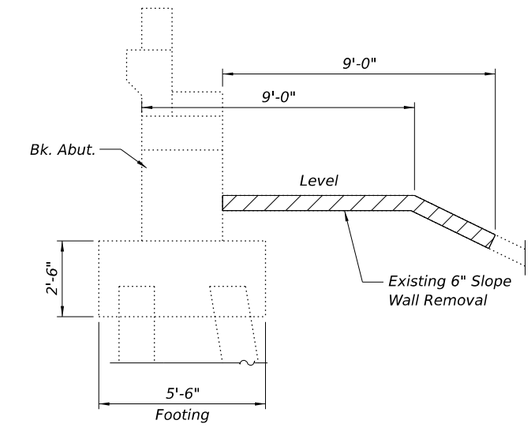

SECTION A-A

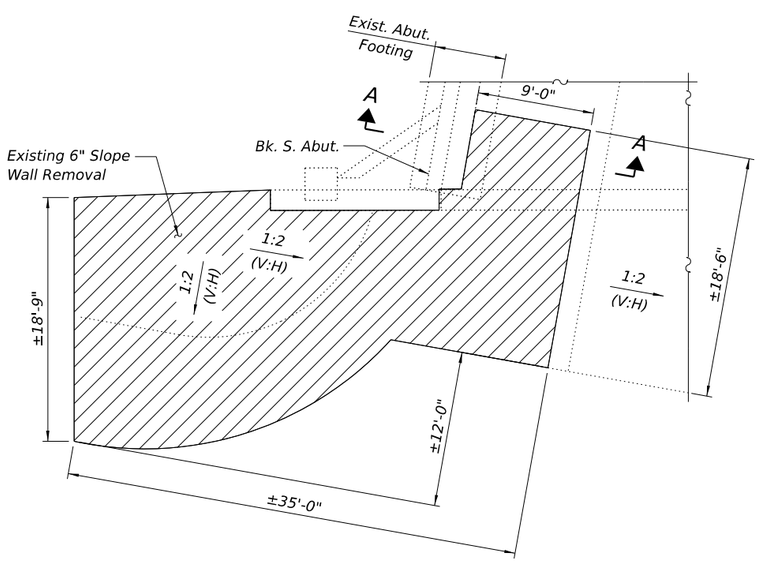

SOUTH ABUTMENT EAST END

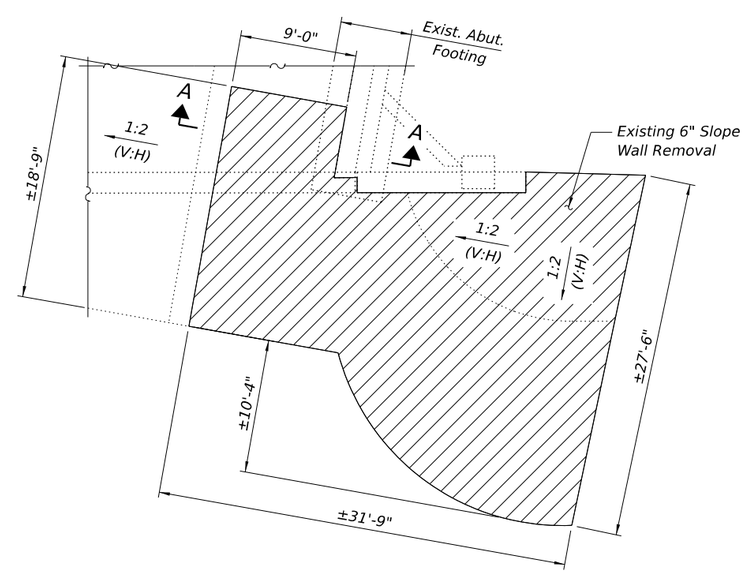

NORTH ABUTMENT EAST END

Notes:
Dimensions shown are in plan. Actual dimensions of slopewall to be removed is subject to sloped ground conditions.

BILL OF MATERIAL

ITEM	UNIT	TOTAL
Slope Wall Removal	Sq. Yd.	262

MODEL: $MODELNAME$
FILE NAME: D876E84-0024-0029-SLOPE DEMO PLAN.dgn

Jacobs
525 West Monroe
Suite 1600
Chicago, IL 60661
(312) 251-3000

USER NAME = jacobspw18lcs11$	DESIGNED - CJF	REVISED -	
	DRAWN - EAK	REVISED -	
PLOT SCALE = 0.16666667 ' / in.	CHECKED - ED	REVISED -	
PLOT DATE = 12/4/2025	DATE - 2025/10/03	REVISED -	

STATE OF ILLINOIS
DEPARTMENT OF TRANSPORTATION

EXISTING SLOPE WALL REMOVAL
STRUCTURE NO. 082-0029

SCALE: NTS | SHEET 24 OF 28 SHEETS | STA. | TO STA.

F.A.I. RTE.	SECTION	COUNTY	TOTAL SHEETS	SHEET NO.
70	Section82-(5,6)RS-2, 60-6RS-2	MADISON & ST. CLAIR	678	467
		CONTRACT NO. 76E84		
		ILLINOIS	FED. AID PROJECT	

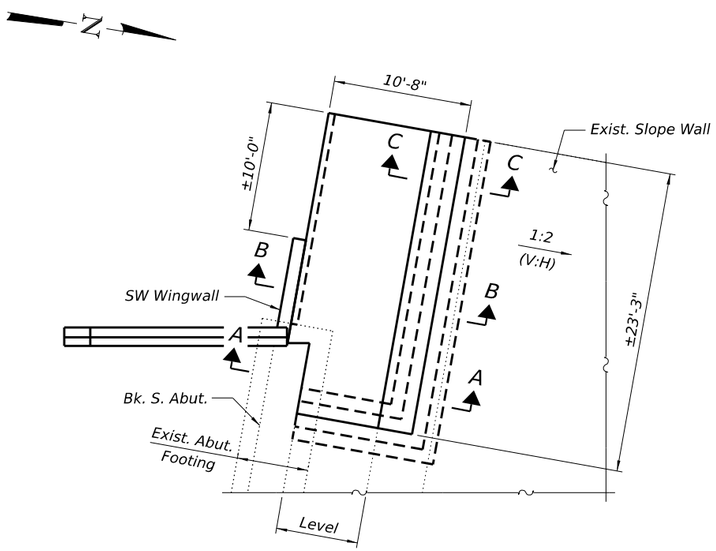

SOUTH ABUTMENT WEST END
(Bridge Slab not shown)

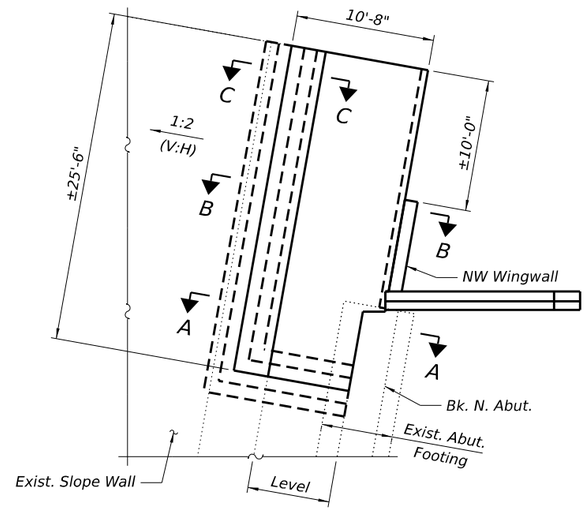

NORTH ABUTMENT WEST END
(Bridge Slab not shown)

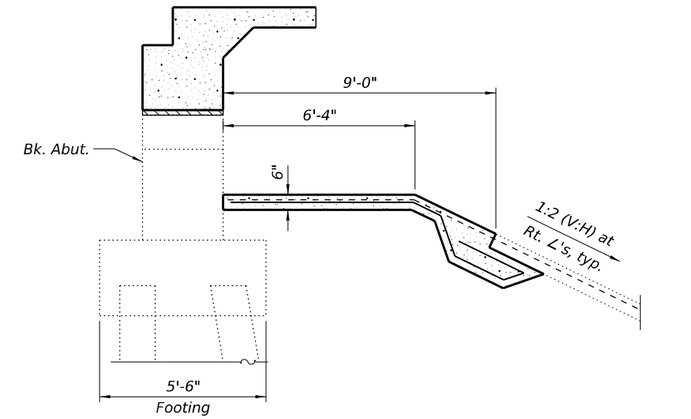

SECTION A-A

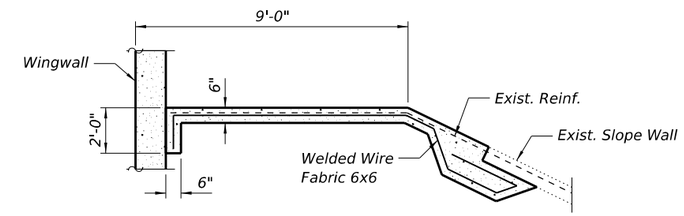

SECTION B-B

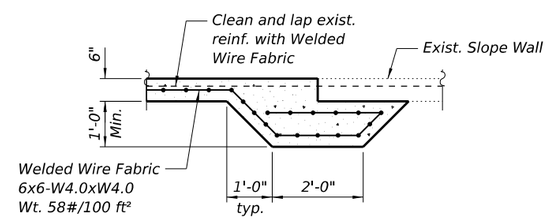

SECTION C-C

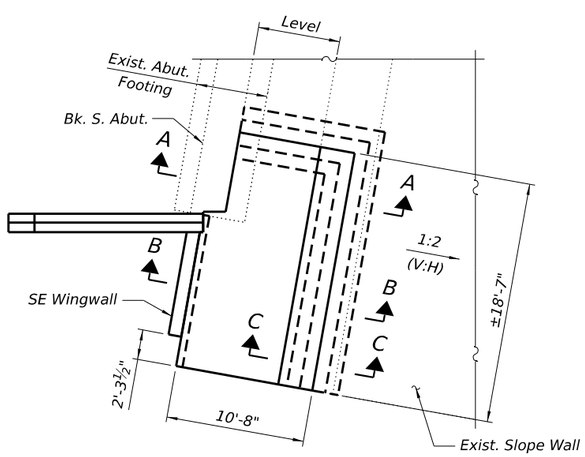

SOUTH ABUTMENT EAST END
(Bridge Slab not shown)

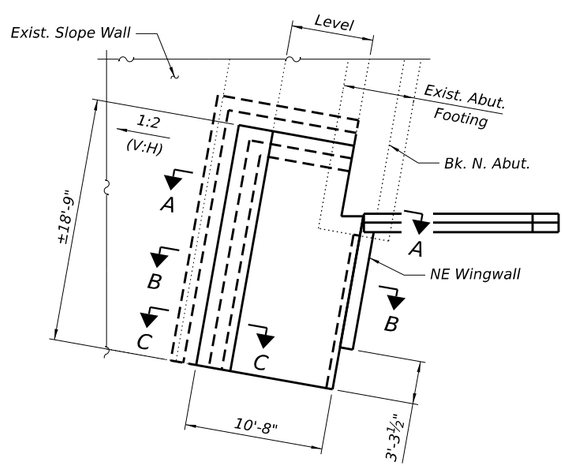

NORTH ABUTMENT EAST END
(Bridge Slab not shown)

BILL OF MATERIAL

ITEM	UNIT	TOTAL
Slope Wall 6 Inch	Sq. Yd.	102

Notes:
Slope wall shall be reinforced with welded wire fabric, 6in. x 6 in. - W4.0 x W4.0, weighting 58 lbs. per 100 sq. ft.
Dimensions shown are in plan. Actual dimensions of slopewall to be placed is subject to sloped ground conditions.

MODEL: $MODELNAME$
FILE NAME: D876E84-025-0029-SLOPE PLAN.dgn

Jacobs
525 West Monroe
Suite 1600
Chicago, IL 60661
(312) 251-3000

USER NAME = jacobspw18lcs09$	DESIGNED - CJF	REVISED -	
	DRAWN - EAK	REVISED -	
PLOT SCALE = 0.16666667 ' / in.	CHECKED - ED	REVISED -	
PLOT DATE = 12/4/2025	DATE - 2025/10/03	REVISED -	

STATE OF ILLINOIS
DEPARTMENT OF TRANSPORTATION

SLOPE WALL REPLACEMENT
STRUCTURE NO. 082–0029

SCALE: NTS | SHEET 25 OF 28 SHEETS | STA. | TO STA.

F.A.I. RTE.	SECTION	COUNTY	TOTAL SHEETS	SHEET NO.
70	Section82-(5,6)RS-2, 60-6RS-2	MADISON & ST. CLAIR	678	468

CONTRACT NO. 76E84
ILLINOIS | FED. AID PROJECT

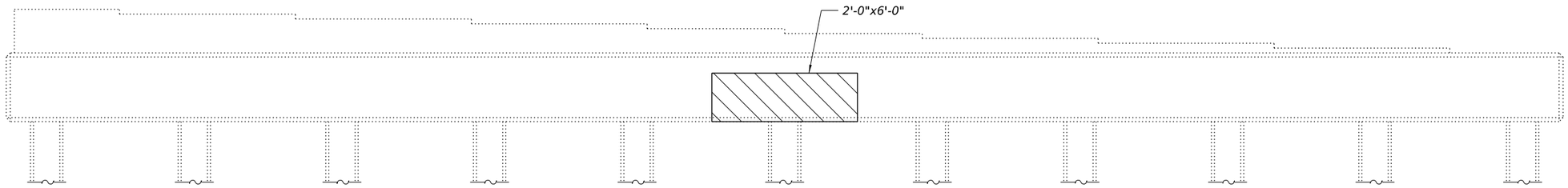

PIER 1 ELEVATION
(Looking South)

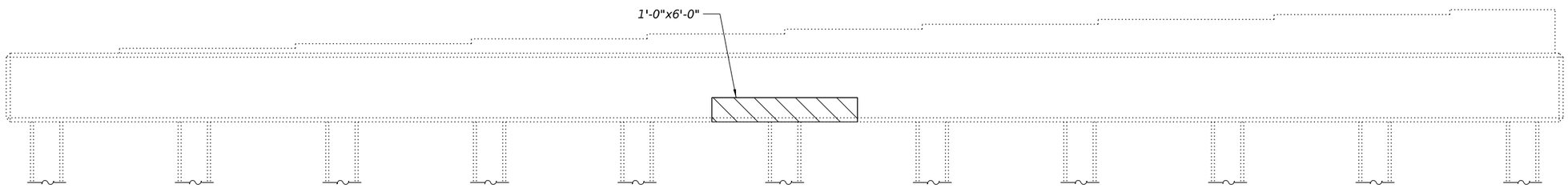

PIER 2 ELEVATION
(Looking North)

Notes:
Repair of existing piers shall include but may not be limited to the areas shown. The actual areas to be repaired shall be determined by the Engineer at the time of construction. See Special Provisions.

LEGEND

Structural Repair of Concrete
(Depth Equal to or Less than 5 in.)

BILL OF MATERIAL

ITEM	UNIT	TOTAL
Structural Repair of Concrete (Depth Equal to or Less than 5 Inches)	Sq. Ft.	18

MODEL: $MODELNAMES
FILE NAME: D876E84-026-0029-PIER REPAIR.dgn

Jacobs
525 West Monroe
Suite 1600
Chicago, IL 60661
(312) 251-3000

USER NAME = jacobspw18ics11$	DESIGNED - CJF	REVISED -	
	DRAWN - EAK	REVISED -	
PLOT SCALE = 0.16666667 ' / in.	CHECKED - ED	REVISED -	
PLOT DATE = 12/4/2025	DATE - 2025/10/03	REVISED -	

STATE OF ILLINOIS
DEPARTMENT OF TRANSPORTATION

PIER 1 AND PIER 2 REPAIR DETAILS
STRUCTURE NO. 082-0029

SCALE: NTS | SHEET 26 OF 28 SHEETS | STA. TO STA.

F.A.I. RTE.	SECTION	COUNTY	TOTAL SHEETS	SHEET NO.
70	Section82-(5,6)RS-2, 60-6RS-2	MADISON & ST. CLAIR	678	469
		CONTRACT NO. 76E84		
		ILLINOIS	FED. AID PROJECT	

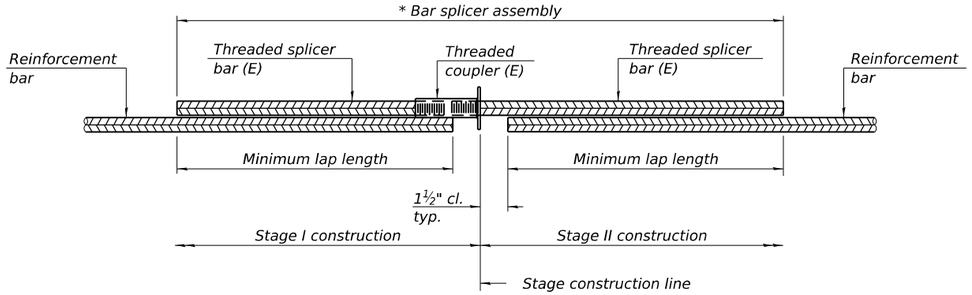

STANDARD BAR SPLICER ASSEMBLY PLAN

Only bar splicer assemblies as presented on the approved QPL list may be used.

Threaded splicer bar length = min. lap length + 1½" + thread length

* Epoxy not required on Bar Splicer Assembly components used in conjunction with black bars.

Location	Bar size	No. assemblies required	Minimum lap length
Deck	#5	582	3'-10"
Diaphragms	#6	12	4'-5"
Appr. Slab	#5	272	3'-10"
Appr. Slab	#8	360	5'-2"
Appr. Footing	#5	160	3'-10"

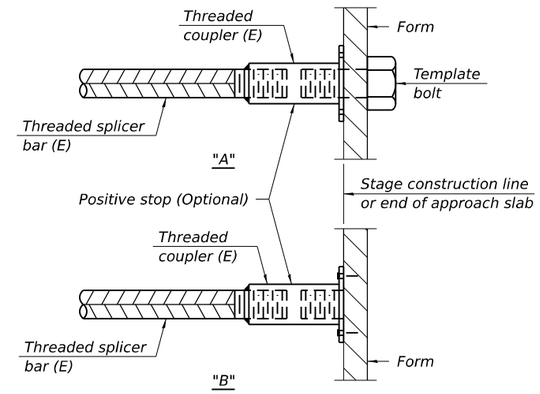

INSTALLATION AND SETTING METHODS

"A" : Set bar splicer assembly by means of a template bolt.
"B" : Set bar splicer assembly by nailing to wood forms or cementing to steel forms.
(E) : Indicates epoxy coating.

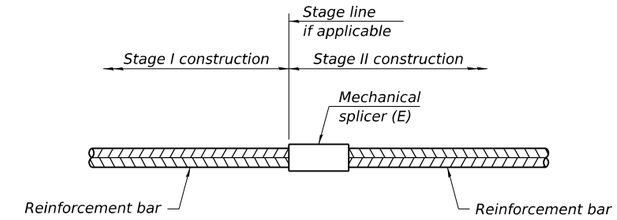

STANDARD MECHANICAL SPLICER

Location	Bar size	No. assemblies required

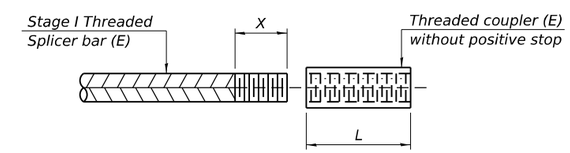

THREADING OF ASSEMBLIES

The threaded length "X" shall be no more than L/2. The bar should be tightened until 0-1 thread(s) is/are exposed.

Notes:
Splicer bars shall be deformed with threaded ends and have a minimum 60 ksi yield strength.
All reinforcement shall be lapped and tied to the splicer bars.
Bar splicer assemblies shall be epoxy coated according to the requirements for reinforcement bars. See Section 508 of the Standard Specifications.
See approved list of bar splicer assemblies and mechanical splicers for alternatives.

BSD-1 4-4-2025

MODEL: $MODELNAME$
FILE NAME: D876E84-027-0029-SPLICE.dgn

Jacobs
525 West Monroe
Suite 1600
Chicago, IL 60661
(312) 251-3000

USER NAME = jacobspw18lcs11$	DESIGNED - CJF	REVISED -	
	DRAWN - EAK	REVISED -	
PLOT SCALE = 2.000 ' / in.	CHECKED - ED	REVISED -	
PLOT DATE = 12/4/2025	DATE - 2025/10/03	REVISED -	

STATE OF ILLINOIS
DEPARTMENT OF TRANSPORTATION

BAR SPLICER ASSEMBLY AND MECHANICAL SPLICER DETAILS
STRUCTURE NO. 082-0029

SCALE: NTS | SHEET 27 OF 28 SHEETS | STA. | TO STA.

F.A.I. RTE.	SECTION	COUNTY	TOTAL SHEETS	SHEET NO.
70	Section82-(5,6)RS-2, 60-6RS-2	MADISON & ST. CLAIR	678	470

CONTRACT NO. 76E84
ILLINOIS | FED. AID PROJECT

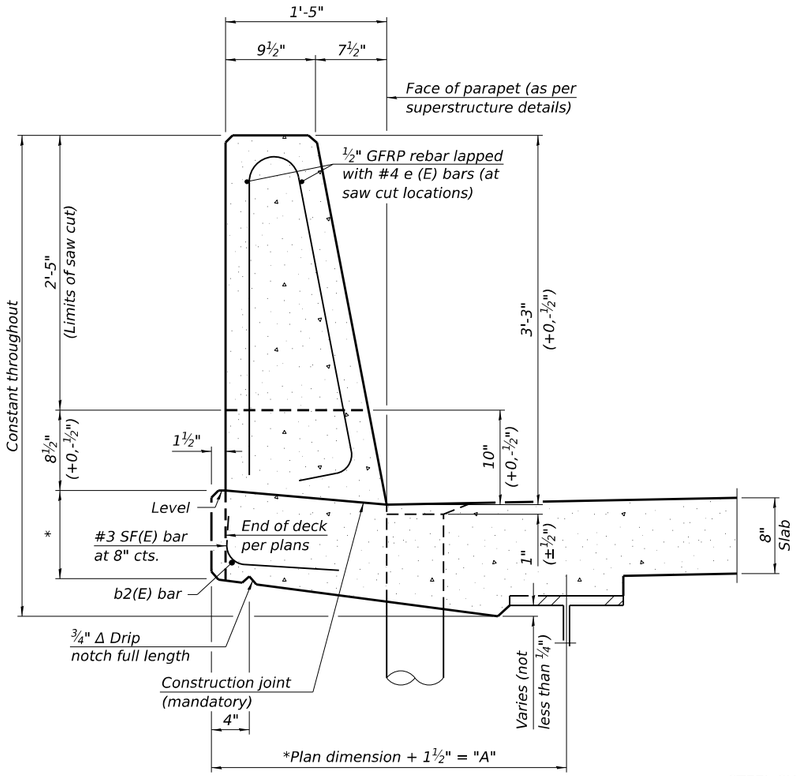

39" CONSTANT-SLOPE PARAPET SECTION

(Showing dimensions, d(E), and ½" Ø GFRP rebar)

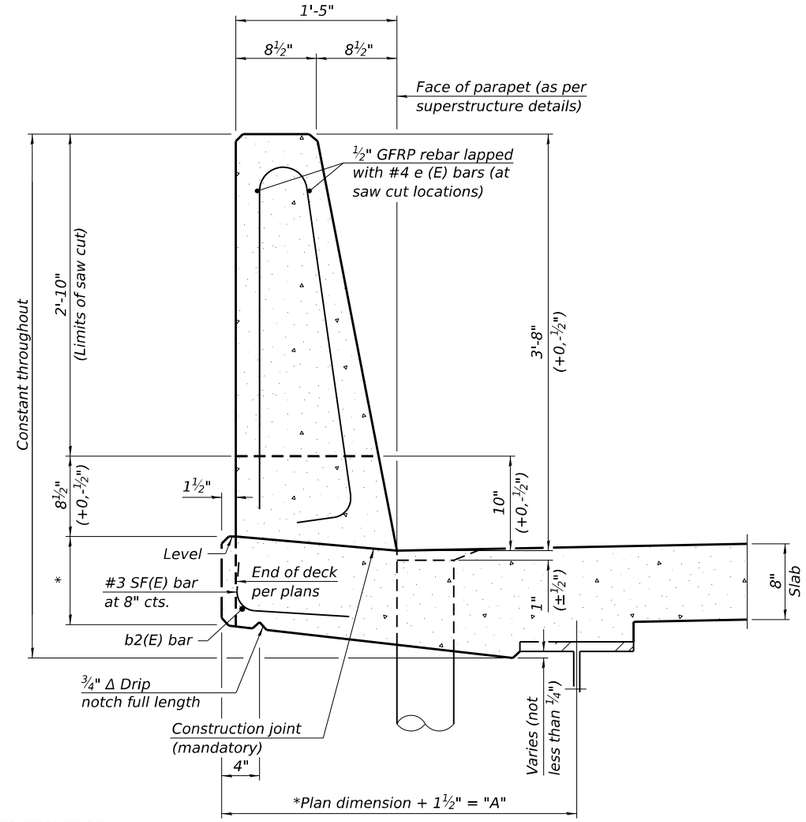

44" CONSTANT-SLOPE PARAPET SECTION

(Showing dimensions, d(E), and ½" Ø GFRP rebar)

STEEL SUPERSTRUCTURES

*See Superstructure Details.

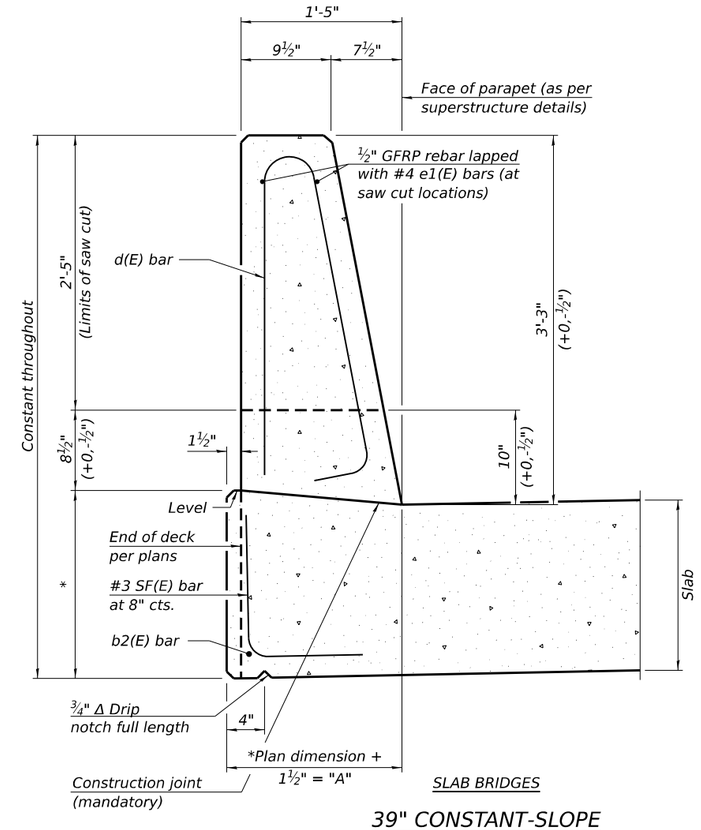

SLAB BRIDGES

39" CONSTANT-SLOPE PARAPET SECTION

(Showing dimensions, d(E), and ½" Ø GFRP rebar)

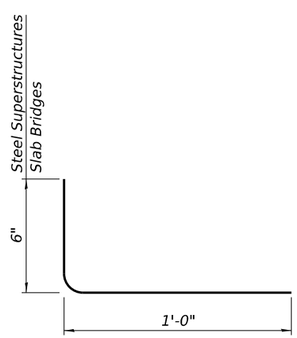

SF(E) BAR

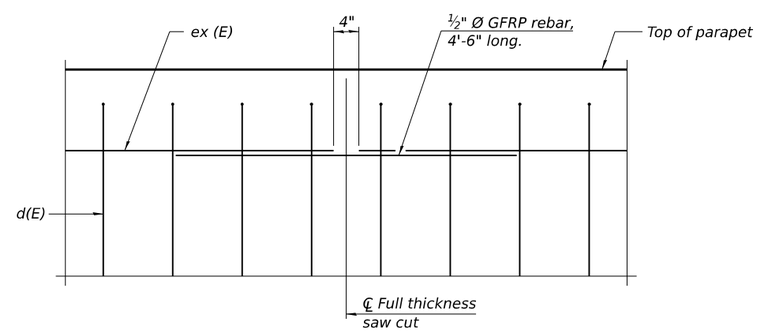

DETAIL - GFRP REBAR STIFFENING ELEVATION

(Place as shown in parapet section at each parapet joint location.)

Notes:
All dimensions shall remain the same as shown on superstructure details, except dimension "A" which is to be revised as shown.
Additional concrete needed to revise dimension "A" (39" and 44" parapets):
Steel Superstructures: 0.00348 cu. yds./ft.
Slab Bridge Superstructures: cu. yds./ft.
Place full depth aluminum sheets as shown on superstructure details.
Replace all cork joint filler locations with a full thickness saw cut.
Steel and slab superstructures shown. Other superstructure types similar.

SFP 39-44 10/27/2023

MODEL: $MODELNAMES
FILE NAME: D876E84-028-0029-SLIPFORM.dgn

Jacobs
525 West Monroe
Suite 1600
Chicago, IL 60661
(312) 251-3000

USER NAME = jacobspw18lcs11$	DESIGNED - CJF	REVISED -	
	DRAWN - EAK	REVISED -	
PLOT SCALE = 2,000 ' / in.	CHECKED - ED	REVISED -	
PLOT DATE = 12/4/2025	DATE - 2025/10/03	REVISED -	

STATE OF ILLINOIS
DEPARTMENT OF TRANSPORTATION

CONCRETE PARAPET SLIPFORMING OPTION
STRUCTURE NO. 082-0029

SCALE: NTS | SHEET 28 OF 28 SHEETS | STA. | TO STA.

F.A.I. RTE.	SECTION	COUNTY	TOTAL SHEETS	SHEET NO.
70	Section82-(5,6)RS-2, 60-6RS-2	MADISON & ST. CLAIR	678	471
		CONTRACT NO. 76E84		
		ILLINOIS	FED. AID PROJECT	

Benchmark: BM 70-2; Cut cross on the south side of the concrete base of a metal streetlight post, 700' west of I-55/70 bridge over IL Route 111, Elev. 416.150. BM 70-3; Cut cross on the north side of the concrete base of a metal streetlight post, 700' east of I-55/70 bridge over IL Route 111, Elev. 417.324.

Existing Structure: SN 060-0006 and SN 060-0007 were originally constructed in 1961 as Section 60-6HB to carry FAI 70 over IL Route 111. Rehabilitation of the structures occurred in 1991 and consisted of widening the superstructure. The hinge pins were replaced in 2000. The structures consists of a 5-span non-composite steel beam bridge on concrete vaulted abutments founded on concrete piles and concrete multi-column piers (Piers 2-4) and a concrete wall pier (Pier 1) founded on timber and concrete piles. The structures have a 15°01'00" skew, 212'-6" back-to-back of abutments, and 59'-2" out-to-out width of deck.

Traffic Control: Stage Construction

No Salvage.

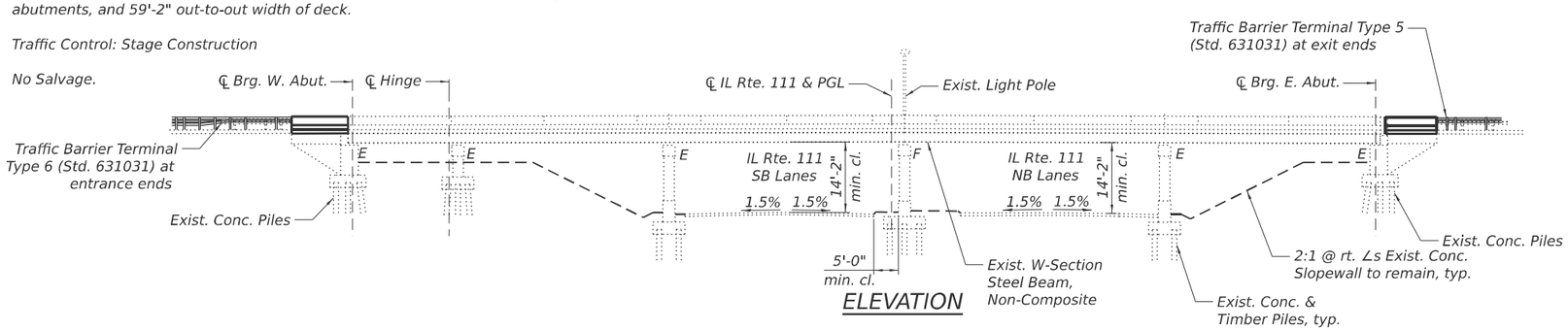

ELEVATION

SCOPE OF WORK

1. Perform localized full depth and partial depth repairs to the bridge deck.
2. Apply a 2 1/4" Hot Mix Asphalt (HMA) / Full Lane Sealant (FLS) Waterproofing System over full deck width and approaches.
3. Remove and replace vaulted approach slabs.
4. Remove all exposed fillet concrete above IL Route 111 traveling lanes.
5. Remove expansion joints at both abutments and Pier 1 and replace with strip seals.
6. Remove and replace 3' of deck ends at all joint replacement locations.
7. Adjust bridge drainage scuppers.

DESIGN STRESSES

FIELD UNITS (NEW CONSTRUCTION)
f'c = 4,000 psi (Superstructure)
f'c = 3,500 psi (Substructure)
fy = 60,000 psi (Reinforcement)

FIELD UNITS (EXISTING CONSTRUCTION)
f'c = 3,500 psi
fy = 60,000 psi (Reinforcement)
fy = 33,000 psi (Original Steel)

DESIGN SPECIFICATIONS

2002 AASHTO Standard Specifications for Highway Bridges, 17th Edition

LOADING HS-20

No future wearing surface.

SEISMIC DATA

Seismic Performance Category (SPC) = B
Horizontal Bedrock Acceleration Coefficient (A) = 0.11g
Site Coefficient (S) = 1.0

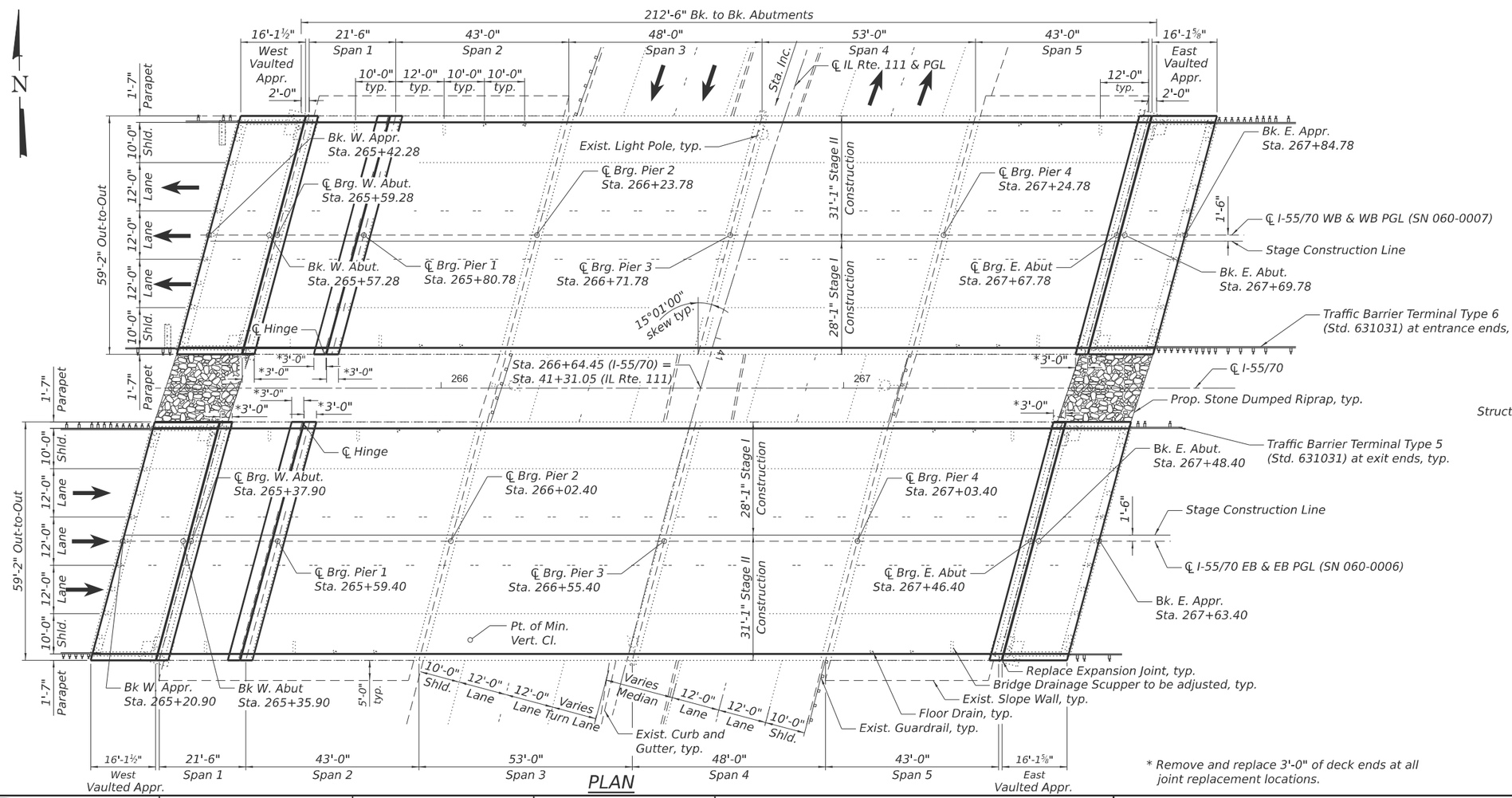

PLAN

* Remove and replace 3'-0" of deck ends at all joint replacement locations.

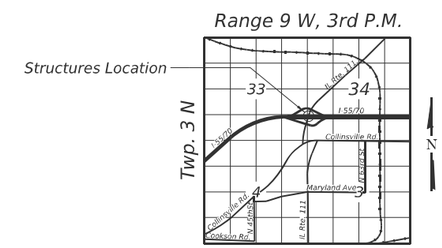

LOCATION SKETCH

STATE OF ILLINOIS
LUIS D. BENITEZ
81-006415
CHICAGO, ILLINOIS
LICENSED STRUCTURAL ENGINEER

COLLINS ENGINEERS, INC.
LUIS D. BENITEZ, P.E., S.E.
NO. 81–006415
EXP.: 11/30/2026

GENERAL PLAN AND ELEVATION
I-55/70 OVER IL ROUTE 111
F.A.I. 70 - SECTION 60-6RS-2
MADISON COUNTY
STA. 266+64.45
SN. 060-0006 (EB) & 060-0007 (WB)

COLLINS ENGINEERS INC.	USER NAME = dredzlc	DESIGNED - KGZ	REVISED -	STATE OF ILLINOIS DEPARTMENT OF TRANSPORTATION	GENERAL PLAN AND ELEVATION STRUCTURE NO. 060–0006 & 060–0007
		CHECKED - AEK	REVISED -		
	PLOT SCALE = $SCALE$	DRAWN - KGZ	REVISED -		SHEET 1 OF 16 SHEETS
	PLOT DATE = 11/26/2025	CHECKED - 2025/10/03	REVISED -		

F.A.I. RTE.	SECTION	COUNTY	TOTAL SHEETS	SHEET NO.
70	82-(5,6)RS-2, 60-6RS-2	MADISON & ST. CLAIR	678	472
		CONTRACT NO. 76E84		
		ILLINOIS	FED. AID PROJECT	

MODEL: General Plan and Elevation
FILE NAME: pw://jacobs-us-va-pw.bentley.com:jacobs-us-va-pw-04/Documents/D3152206.02 - ILDOT - I-55 I-70 Rehabilitation/30 Project Data/PID/ST/Collins/Sht/060-0006 & 060-0007/D676E46-sht-001-060006&060007-GPE
11/26/2025 1:36:17 PM

GENERAL NOTES

1. Reinforcement bars designated (E) shall be epoxy coated.
2. Plan dimensions and details relative to the existing structure have been taken from existing plans are subject to nominal construction variations. The Contractor shall field verify existing dimensions and details affecting new construction and make necessary approved adjustments prior to construction or ordering of materials. Such variations shall not be cause for additional compensation for a change in scope of the work, however, the Contractor will be paid for the quantity actually furnished at the unit price bid for the work.
3. Existing reinforcement shall be cleaned, straightened, and incorporated into the new construction. Any reinforcement bars to remain that are damaged during concrete removal operations shall be repaired or replaced using an approved bar splicer or anchorage system. Cost included with Concrete Removal.
4. Cost of removal and disposal of existing expansion joints shall be included in the cost of Concrete Removal.
5. Joint openings shall be adjusted according to Article 520.04 of the Std. Specs. when the concrete adjacent to joints is poured at an ambient temperature other than 50°F.
6. Bridge Deck Concrete Sealer shall be applied to the entire top surface of joint reconstruction areas and the top and inside vertical faces of parapets when the concrete is at least 14 days old.
7. The Contractor shall make allowance for the deflection of forms, shrinkage, and settlement of falsework, in addition to allowance for dead load deflection in Vaulted Approach Spans.
8. Expansion Joints shall be assembled in their final relative position with the ends in place for shop inspection and acceptance.
9. The Engineer shall show actual locations and size of deck repairs on As-built Plans.
10. Protective coat shall not be applied to surfaces to which Waterproofing Membrane System is applied.
11. If the Contractor elects to use cantilever forming brackets on the exterior beams or girders, the brackets shall be placed at the same locations as required for the hardwood blocks in Article 503.06(b) of the Standard Specifications. If additional cantilever forming brackets are required, hardwood blocking shall be wedged between the exterior and first interior beam at each of these additional bracket locations.
12. The Contractor shall make allowance for the deflection of forms, shrinkage, and settlement of falsework, in addition to allowance for dead load deflection. Forms for deck slab shall be removed prior to placement of bridge approach slab.
13. Proposed profile is best fit based on LIDAR Survey Data -- for reference only. All elevations shall be field-verified and adjusted to match existing conditions. Contractor shall verify all dimensions and elevations prior to construction.
14. The pay item Full Lane Sealant Waterproofing System shall include the cost of the tack coat, both layers of FLS, and the 3/4 in. HMA Binder Course. The pay item Polymerized Hot-Mix Asphalt Surface Course, Stone Matrix Asphalt shall include the cost of the 1-1/2 in. thick layer of SMA-9.5 Surface course.
15. The existing structural steel coating contains lead. The Contractor shall take a appropriate precautions to address the presence of lead on this project.
16. Prior to pouring the new concrete deck, all heavy or loose rust, loose mill scale, and other loose detrimental foreign material shall be removed from the surfaces in contact with concrete (SSPC - SP3 standards). Tightly adhered paint may remain unless otherwise noted. Removal shall be accomplished by methods that will not damage the steel and the cost will be paid for according to Article 109.04 of the Standard Specifications. As directed by the Engineering, existing construction accessories welded to the top flange of beams and girders shall be removed. The weld areas shall be ground flush and inspected for cracks using magnetic particle testing (MT) or dye penetrant testing (PT) by qualified personnel approved by theEngineer. Any cracks that cannot be removed by grinding 1/4" deep shall be identified and reported to the Bureau of Bridges & Structures for further disposition. The cost of removing welded accessories, grinding, and inspecting weld areas and grinding cracks will be paid for according to Article 109.04 of the Standard Specifications.
17. All structural steel shall conform to AASHTO M-270 Gr. 36 unless otherwise noted.

INDEX OF SHEETS

1	General Plan and Elevation
2	General Notes, Index of Sheets, & Total Bill of Material
3	Stage Construction Details
4	Superstructure Removal
5	Temporary Concrete Barrier
6	Top of Approach Slab Elevations (SN 060-0006)
7	Top of Approach Slab Elevations (SN 060-0007)
8	Deck Repair Plan
9-10	Vaulted Approach Slab Details
11-12	Joint Reconstruction Details
13	Preformed Joint Strip Seal
14-15	Drainage Scupper Details
16	Bar Splicers

TOTAL BILL OF MATERIAL

ITEM	UNIT	QUANTITY		
		060-0006	060-0007	TOTAL
Stone Dumped Riprap, Class A5	Sq. Yd.	34	34	68
Polymerized Hot-Mix Asphalt Surface Course, Stone Matrix Asphalt, 9.5, Mix "E", N80	Ton	120	120	240
Concrete Removal	Cu. Yd.	122.3	122.3	244.6
Concrete Superstructure	Cu. Yd.	35.6	35.6	71.2
Concrete Superstructure (Approach Slab)	Cu. Yd.	85.0	85.0	170.0
Reinforcement Bars, Epoxy Coated	Pound	31,450	31,450	62,900
Bar Splicers	Each	142	142	284
Preformed Joint Strip Seal	Foot	180.0	180.0	360.0
Full Lane Sealant Waterproofing System	Sq. Yd.	1,446	1,446	2,892
Drainage Scuppers to be Adjusted	Each	6	6	12
Bridge Deck Concrete Sealer	Sq. Ft.	964	964	1,928
Deck Slab Repair (Full Depth, Type II)	Sq. Yd.	3	2	5
Deck Slab Repair (Partial)	Sq. Yd.	2	1	3

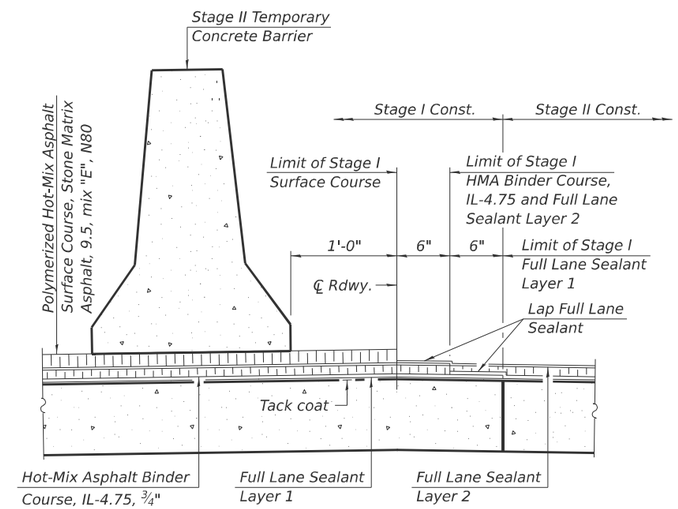

WATERPROOFING STAGING

Full Lane Sealant Waterproofing System consists of an initial tack coat to promote bonding, Layer 1 of Full Lane Sealant, a layer of Hot-Mix Asphalt Binder Course, IL-4.75, and Layer 2 of Full Lane Sealant.

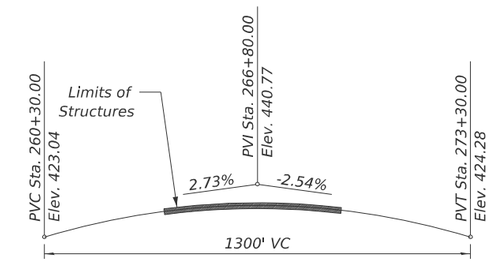

PROP. EB I-55/70 (SN 060-0006) PROFILE GRADE

(Projected to Centerline of Structures, see Sheet 1 for location)
(See Note 13)

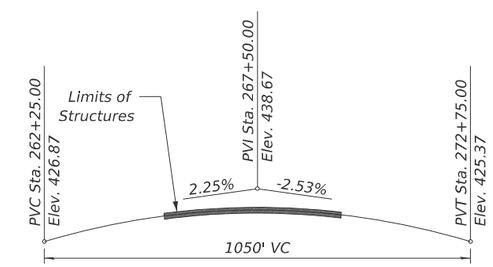

PROP. WB I-55/70 (SN 060-0007) PROFILE GRADE

(Projected to Centerline of Structures, see Sheet 1 for location)
(See Note 13)

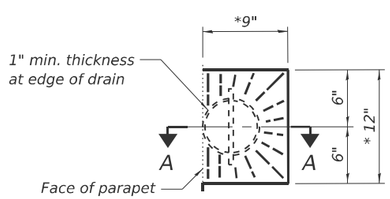

DRAIN DETAIL

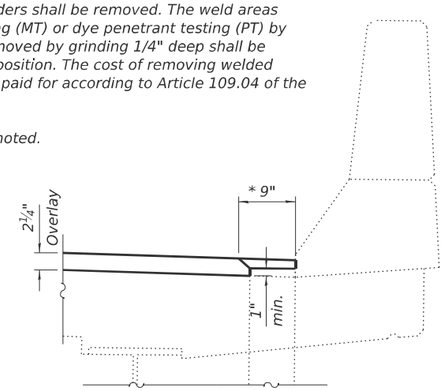

SECTION A-A

TREATMENT OF NEW CONCRETE OVERLAY AT FLOOR DRAINS

* Slope overlay to drain

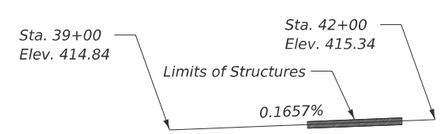

EXIST. IL RTE. 111 PROFILE GRADE

(Along IL Route 111 Centerline
See Sheet 1 for location)

EXIST. HORIZ. CURVE DATA

Centerline IL Rte. 111

EX CURVE CL IL 111
PI STA = 38+43.29
Δ = 19°46'25" (LT)
D = 03°05'33"
R = 1,852.68'
T = 322.90'
L = 639.39'
E = 27.93'
e = 2.5%
PC STA = 35+20.39
PT STA = 41+59.77

MODEL: General Data
FILE NAME: pw://jacobs-uis-va-pw.bentley.com:jacobs-uis-va-pw-04/Documents/D3152206.02 - ILDOT - I-55 I-70 Rehabilitation\30 Project Data\PID\ST\Collins\SN\060-0006 & 060-0007\D876E46-sht-002-060006&060007-General Data
11/24/2025 8:10:02 AM

COLLINS ENGINEERS INC

USER NAME = kzalewski	DESIGNED - KGZ	REVISED -	
	CHECKED - AEK	REVISED -	
PLOT SCALE = $SCALE$	DRAWN - DR	REVISED -	
PLOT DATE = 11/24/2025	CHECKED - 2025/10/03	REVISED -	

STATE OF ILLINOIS
DEPARTMENT OF TRANSPORTATION

GENERAL NOTES, INDEX OF SHEETS, & TOTAL BILL OF MATERIALS
STRUCTURE NO. 060–0006 & 060–0007

SHEET 2 OF 16 SHEETS

F.A.I. RTE.	SECTION	COUNTY	TOTAL SHEETS	SHEET NO.
70	82-(5,6)RS-2, 60-6RS-2	MADISON & ST. CLAIR	678	473

CONTRACT NO. 76E84

ILLINOIS | FED. AID PROJECT

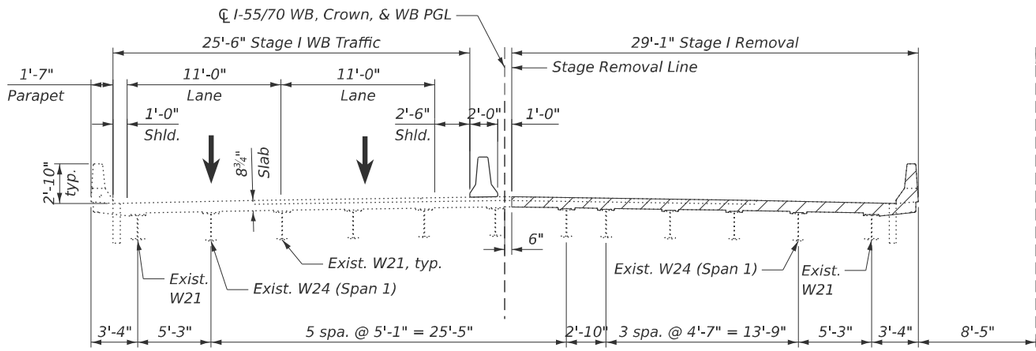

STAGE I REMOVAL WB
(SN 060-0007)

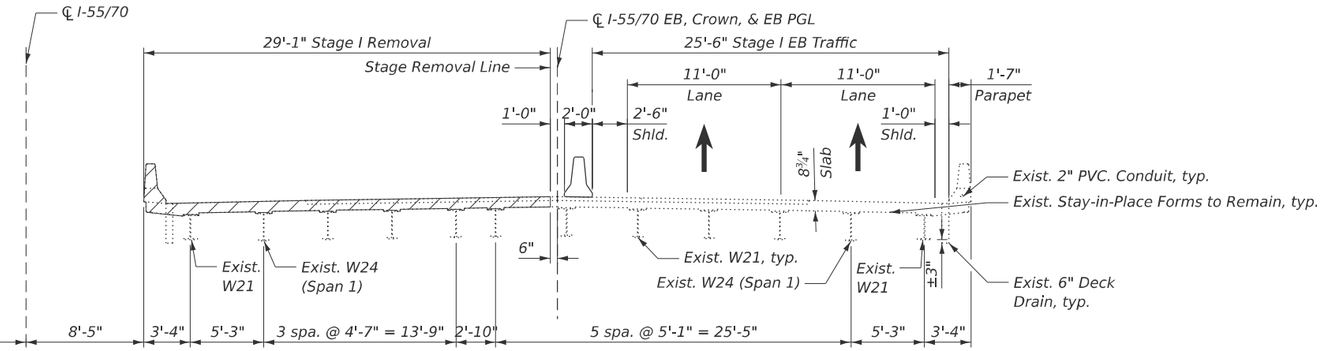

STAGE I REMOVAL EB
(SN 060-0006)

STAGE I REMOVAL
(Looking East)
Full depth replacement at joints and approach slabs only.

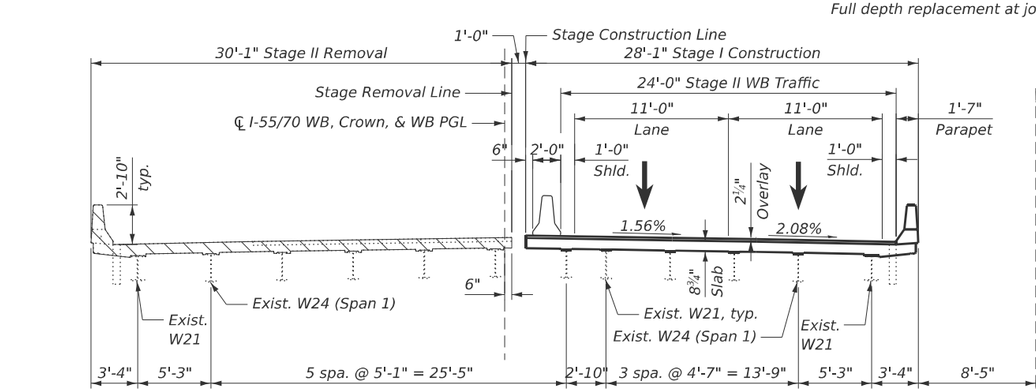

STAGE I CONSTRUCTION AND STAGE II REMOVAL WB
(SN 060-0007)

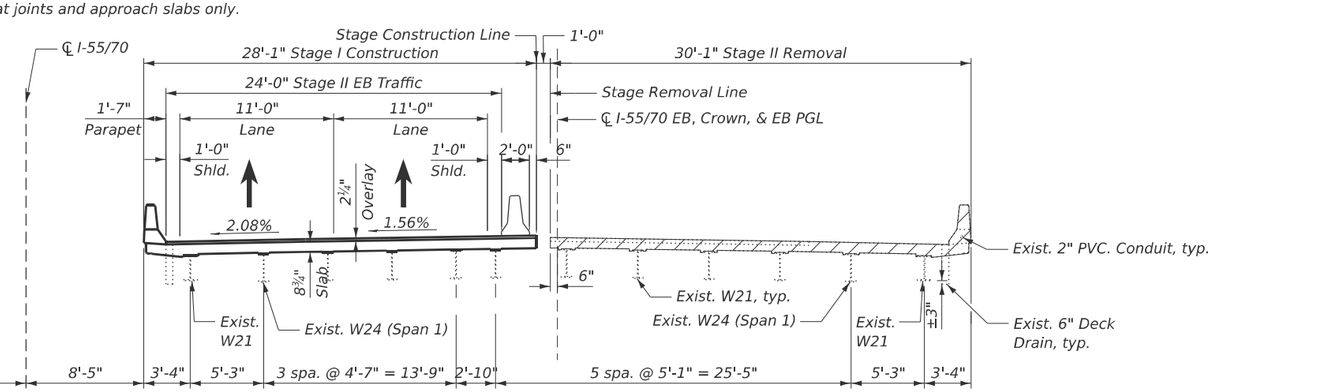

STAGE I CONSTRUCTION AND STAGE II REMOVAL EB
(SN 060-0006)

STAGE I CONSTRUCTION AND STAGE II REMOVAL
(Looking East)
Full depth replacement at joints and approach slabs only.

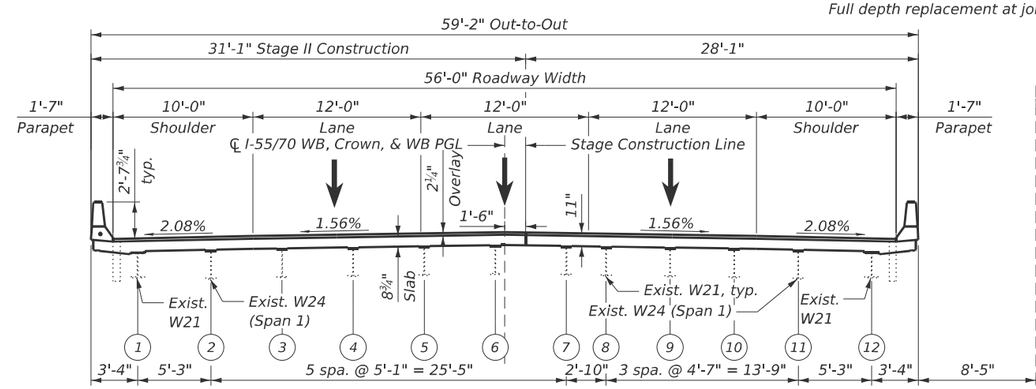

STAGE II CONSTRUCTION AND FINAL CROSS SECTION WB
(SN 060-0007)

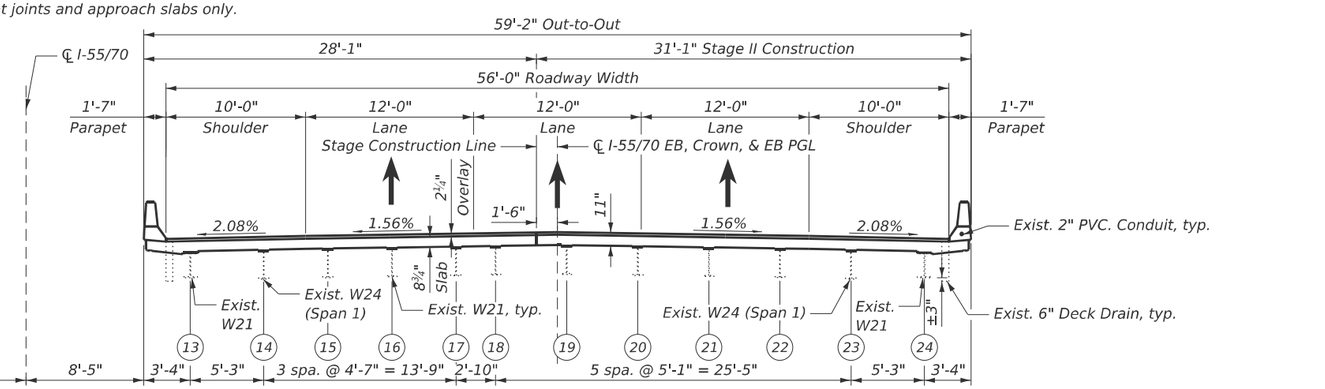

STAGE II CONSTRUCTION AND FINAL CROSS SECTION EB
(SN 060-0006)

STAGE II CONSTRUCTION AND FINAL CROSS SECTION
(Looking East)
Full depth replacement at joints and approach slabs only.

Note:
Stage Construction Details shown for full depth joint reconstruction sections only. The remainder of the bridge shall have the same staging sequence for the application of 2-1/4" Full Lane Sealant (FLS) Waterproofing Overlay over full width of deck, see Waterproofing Staging figure on Sheet 2 for clarity.

LEGEND:

Temporary Concrete Barrier

(#) Beam Number

BILL OF MATERIAL

ITEM	UNIT	QUANTITY		
		060-0006	060-0007	TOTAL
Polymerized Hot-Mix Asphalt Surface Course	Ton	101	101	202
Full Lane Sealant Waterproofing System	Sq. Yd.	1,233	1,233	2,466

Note: The quantities shown above are for the entire bridge except for the approach slabs and joint reconstruction.

MODEL: Construction Staging II
FILE NAME: pw://jacobs-us-vis-pw.bentley.com:jacobs-us-vis-pw-04/Documents/D3152206.02 - ILDOT - I-55 I-70 Rehabilitation\30 Project Data\PID\ST\Collins\Sht\060-0006 & 060-0007\D876E46-sht-003-060006&060007-Stage Construction Details

COLLINS ENGINEERS INC.

USER NAME = kzalewski	DESIGNED - KGZ	REVISED -	
	CHECKED - AEK	REVISED -	
PLOT SCALE = $SCALE$	DRAWN - KGZ	REVISED -	
PLOT DATE = 11/24/2025	CHECKED - 2025/10/03	REVISED -	

STATE OF ILLINOIS
DEPARTMENT OF TRANSPORTATION

STAGE CONSTRUCTION DETAILS
STRUCTURE NO. 060–0006 & 060–0007

SHEET 3 OF 16 SHEETS

F.A.I. RTE.	SECTION	COUNTY	TOTAL SHEETS	SHEET NO.
70	82-(5,6)RS-2, 60-6RS-2	MADISON & ST. CLAIR	678	474
		CONTRACT NO. 76E84		
		ILLINOIS	FED. AID PROJECT	

11/24/2025 8:10:14 AM

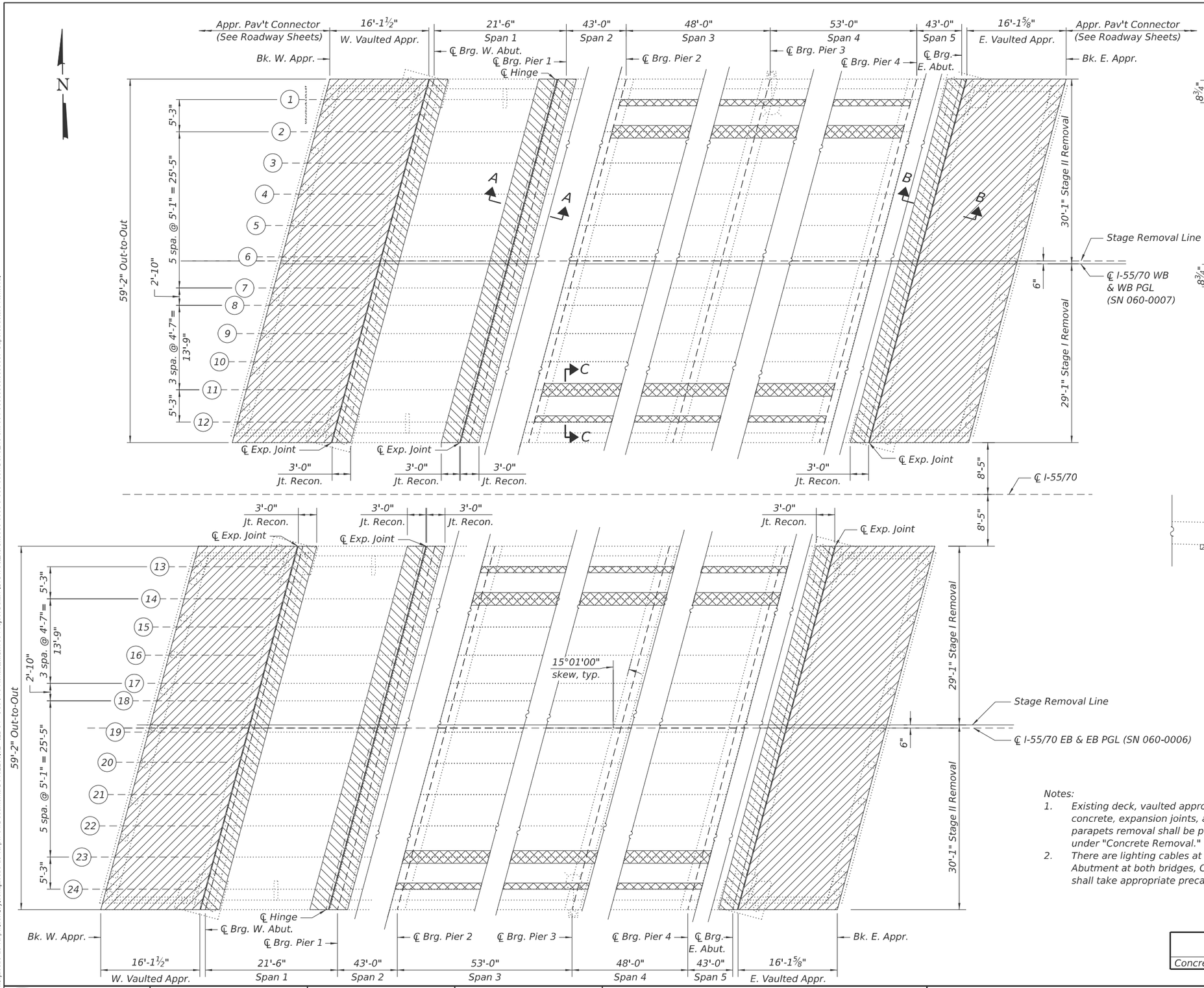

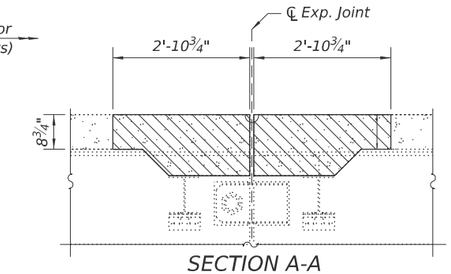

SECTION A-A

(Horiz. dim. at Rt. ∠'s)

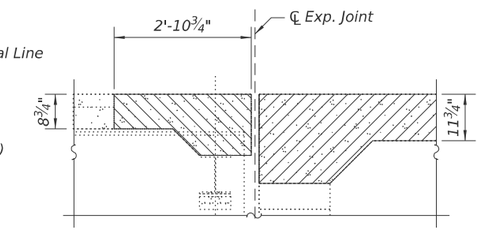

SECTION B-B

(Horiz. dim. at Rt. ∠'s)

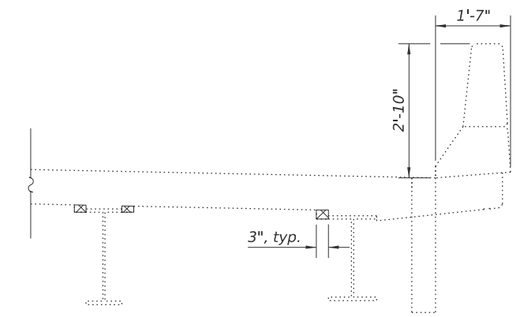

SECTION C-C

Notes:

1. Existing deck, vaulted approach, fillet concrete, expansion joints, and parapets removal shall be paid for under "Concrete Removal."
2. There are lighting cables at the East Abutment at both bridges, Contractor shall take appropriate precautions.

LEGEND:

- Existing Deck Removal
- Existing Approach Slab Removal
- Existing Fillet Concrete Removal
- (#) Beam Number

BILL OF MATERIAL

ITEM	UNIT	QUANTITY		
		060-0006	060-0007	TOTAL
Concrete Removal	Cu. Yd.	122.3	122.3	244.6

MODEL: Superstructure Removal
FILE NAME: pw://jacobs-us-pw.bentley.com:jacobs-us-pw-04/Documents/D3152206.02 - ILDOT - I-55 I-70 Rehabilitation\30 Project Data\PID/ST/Collins\Sht\060-0006 & 060-0007/D876E48-sht-004-060006&0600007-Superstructure Removal

11/24/2025 8:10:28 AM

COLLINS ENGINEERS INC

USER NAME = kzalewski	DESIGNED - KGZ	REVISED -	
	CHECKED - AEK	REVISED -	
PLOT SCALE = $SCALE$	DRAWN - KGZ	REVISED -	
PLOT DATE = 11/24/2025	CHECKED - 2025/10/03	REVISED -	

STATE OF ILLINOIS
DEPARTMENT OF TRANSPORTATION

SUPERSTRUCTURE REMOVAL
STRUCTURE NO. 060–0006 & 060–0007

SHEET 4 OF 16 SHEETS

F.A.I. RTE.	SECTION	COUNTY	TOTAL SHEETS	SHEET NO.
70	82-(5,6)RS-2, 60-6RS-2	MADISON & ST. CLAIR	678	475

CONTRACT NO. 76E84

ILLINOIS | FED. AID PROJECT

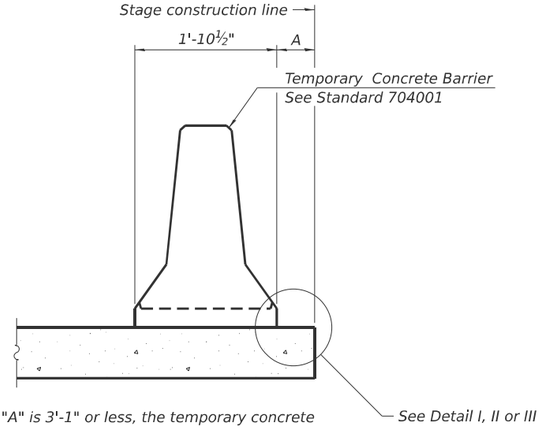

When "A" is 3'-1" or less, the temporary concrete barrier shall be restrained to the new slab according to Detail I, II or III. No restraint is required when "A" is greater than 3'-1".

NEW SLAB OR NEW DECK BEAM

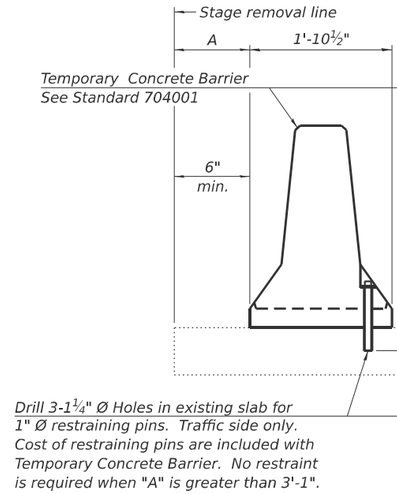

EXISTING SLAB

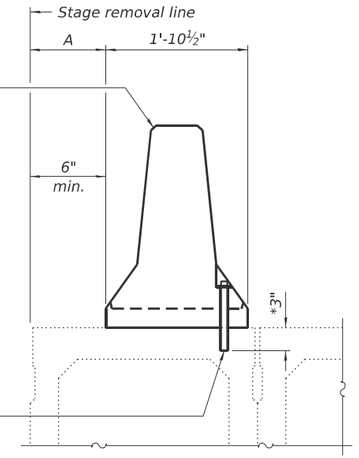

* When hot-mix asphalt wearing surface is present, embedment shall be 3" plus the wearing surface depth.

EXISTING DECK BEAM

SECTIONS THRU SLAB OR DECK BEAM

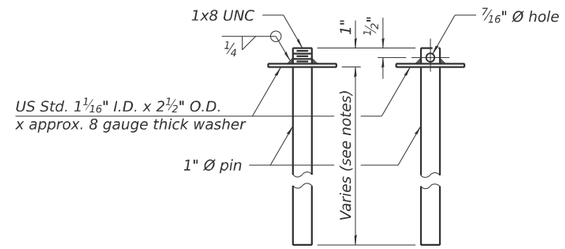

RESTRAINING PIN

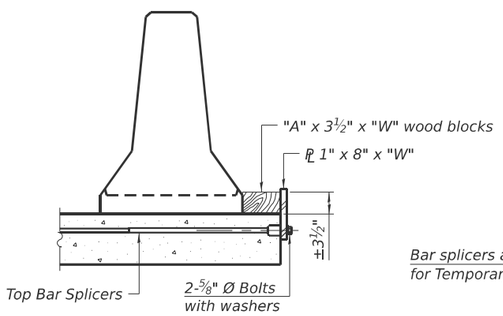

DETAIL I

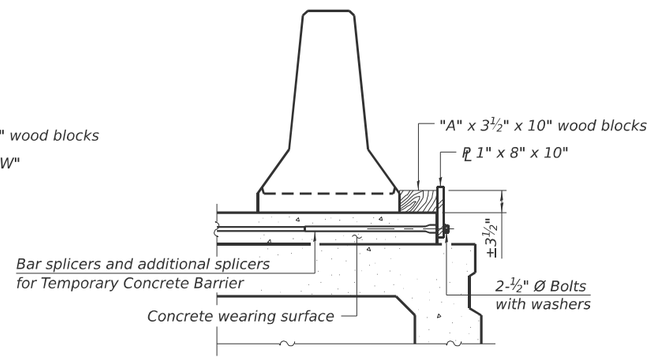

DETAIL II

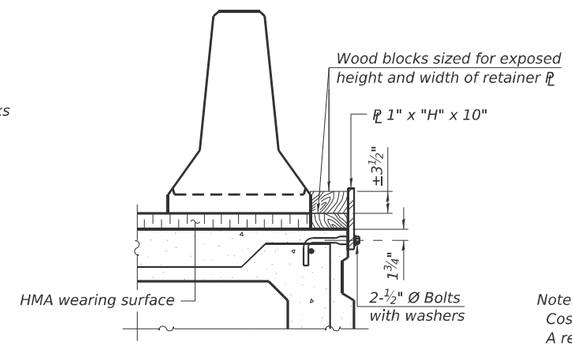

DETAIL III

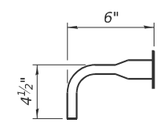

BAR SPLICER FOR #4 BAR - DETAIL III

Notes:

Cost of retainer assembly is included with Temporary Concrete Barrier.

A retainer assembly shall be located at the approximate ℄ of each temporary concrete barrier.

The retainer plate shall not be removed until the concrete on the adjacent stage is ready to be poured. For Detail III applications the retainer plate shall not be removed until just prior to placing the adjacent beam.

When the 'A' dimension is less than 1½", the wood block shall be omitted and the barrier shall be placed in direct contact with the steel retainer plate. For deck beam applications the minimum required 'A' distance is 6" to accommodate the shear key clamping device.

Detail I - Installation for a new bridge deck or bridge slab.

Detail II - Installation for a new deck beam with an initial concrete wearing surface. Additional bar splicers shall be provided at 6'-0" centers and paired with the bar splicers of the concrete wearing surface reinforcement to accommodate the installation of the retainer assemblies. The cost of the additional bar splicers is included with the concrete wearing surface.

Detail III - Installation for a new deck beam with no initial wearing surface or with an initial hot-mix asphalt (HMA) wearing surface present. The deck beam directly beneath the temporary concrete barrier shall be fabricated with bar splicer inserts in the side of the beam, as detailed, to accommodate the installation of the retainer assemblies. A pair of bar splicers, 6" apart, shall be placed at 6'-0" centers along the length of the beam. The cost of the bar splicers is included with the deck beam.

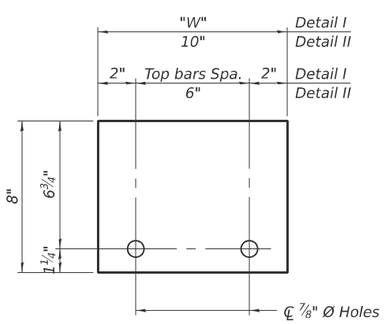

STEEL RETAINER PL 1" x 8" x "W"

(Detail I and II)

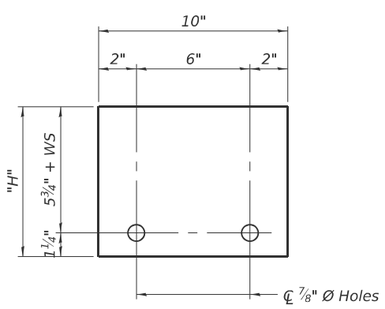

STEEL RETAINER PL 1" x "H" x 10"

(Detail III)

RAILING CRITERIA

NCHRP 350 Test Level	3
Railing Weight (plf)	440

R-27 5-15-2023

COLLINS ENGINEERS INC.

USER NAME = kzalewski	DESIGNED - KGZ	REVISED -	STATE OF ILLINOIS DEPARTMENT OF TRANSPORTATION	TEMPORARY CONCRETE BARRIER STRUCTURE NO. 060–0006 & 060–0007	F.A.I. RTE. 70	SECTION 82-(5,6)RS-2, 60-6RS-2	COUNTY MADISON & ST. CLAIR / TOTAL SHEETS 678 / SHEET NO. 476
	CHECKED - AEK	REVISED -					CONTRACT NO. 76E84
PLOT SCALE = $SCALE$	DRAWN - DR	REVISED -					ILLINOIS / FED. AID PROJECT
PLOT DATE = 11/24/2025	CHECKED - 2025/10/03	REVISED -		SHEET 5 OF 16 SHEETS			

MODEL: Temporary Conc Barrier
FILE NAME: pw://jacobs-us-va-pw.bentley.com:jacobs-us-va-pw-04/Documents/D3152206.02 - ILDOT - I-55 I-70 Rehabilitation/30 Project Data/PID/ST/Collins/Sht/060-0006 & 060-0007/D876E46-sht-005-060006&060007-Temp Conc Barrier

11/24/2025 8:41:06 AM

FACE OF NORTH PARAPET

Location	Station	Offset	Theoretical Grade Elevations	Theoretical Grade Elevations Adjusted for Dead Load Deflection
W. End of West Appr. Pav't.	265+28.41	-28.00	431.12	431.12
A1	265+38.41	-28.00	431.19	431.19
E. End of West Appr. Pav't.	265+44.54	-28.00	431.23	431.23
W. End of East Appr. Pav't.	267+54.78	-28.00	431.68	431.68
A2	267+64.78	-28.00	431.66	431.66
E. End of East Appr. Pav't.	267+70.92	-28.00	431.65	431.65

NORTH EDGE OF ROADWAY

Location	Station	Offset	Theoretical Grade Elevations	Theoretical Grade Elevations Adjusted for Dead Load Deflection
W. End of West Appr. Pav't.	265+25.73	-18.00	431.31	431.31
A1	265+35.73	-18.00	431.38	431.38
E. End of West Appr. Pav't.	265+41.86	-18.00	431.42	431.42
W. End of East Appr. Pav't.	267+52.10	-18.00	431.90	431.90
A2	267+62.10	-18.00	431.88	431.88
E. End of East Appr. Pav't.	267+68.24	-18.00	431.86	431.86

STAGE CONSTRUCTION LINE

Location	Station	Offset	Theoretical Grade Elevations	Theoretical Grade Elevations Adjusted for Dead Load Deflection
W. End of West Appr. Pav't.	265+21.31	-1.50	431.53	431.53
A1	265+31.31	-1.50	431.60	431.60
E. End of West Appr. Pav't.	265+37.44	-1.50	431.64	431.64
W. End of East Appr. Pav't.	267+47.67	-1.50	432.16	432.16
A2	267+57.67	-1.50	432.14	432.15
E. End of East Appr. Pav't.	267+63.81	-1.50	432.13	432.13

℄ I-55/70 EB, CROWN, & EB PGL

Location	Station	Offset	Theoretical Grade Elevations	Theoretical Grade Elevations Adjusted for Dead Load Deflection
W. End of West Appr. Pav't.	265+20.90	0.00	431.55	431.55
A1	265+30.90	0.00	431.62	431.62
E. End of West Appr. Pav't.	265+37.03	0.00	431.66	431.66
W. End of East Appr. Pav't.	267+47.27	0.00	432.19	432.19
A2	267+57.27	0.00	432.17	432.17
E. End of East Appr. Pav't.	267+63.41	0.00	432.15	432.15

SOUTH EDGE OF ROADWAY

Location	Station	Offset	Theoretical Grade Elevations	Theoretical Grade Elevations Adjusted for Dead Load Deflection
W. End of West Appr. Pav't.	265+16.07	18.00	431.23	431.23
A1	265+26.07	18.00	431.31	431.31
E. End of West Appr. Pav't.	265+32.20	18.00	431.35	431.35
W. End of East Appr. Pav't.	267+42.44	18.00	431.91	431.91
A2	267+52.44	18.00	431.90	431.90
E. End of East Appr. Pav't.	267+58.58	18.00	431.88	431.88

FACE OF S. PARAPET

Location	Station	Offset	Theoretical Grade Elevations	Theoretical Grade Elevations Adjusted for Dead Load Deflection
W. End of West Appr. Pav't.	265+13.39	28.00	431.01	431.01
A1	265+23.39	28.00	431.08	431.08
E. End of West Appr. Pav't.	265+29.52	28.00	431.12	431.12
W. End of East Appr. Pav't.	267+39.76	28.00	431.71	431.71
A2	267+49.76	28.00	431.69	431.70
E. End of East Appr. Pav't.	267+55.90	28.00	431.68	431.68

Note:
The elevations are calculated based on the roadway profile shown on Sheet 2. The approach slab shall be placed to match existing elevations. Contractor to verify the elevations and maintain a minimum slab thickness of 11-3/4". Grade elevations shown are prior to overlay being placed. The proposed approach top of slab elevation shall match existing top of slab elevations.

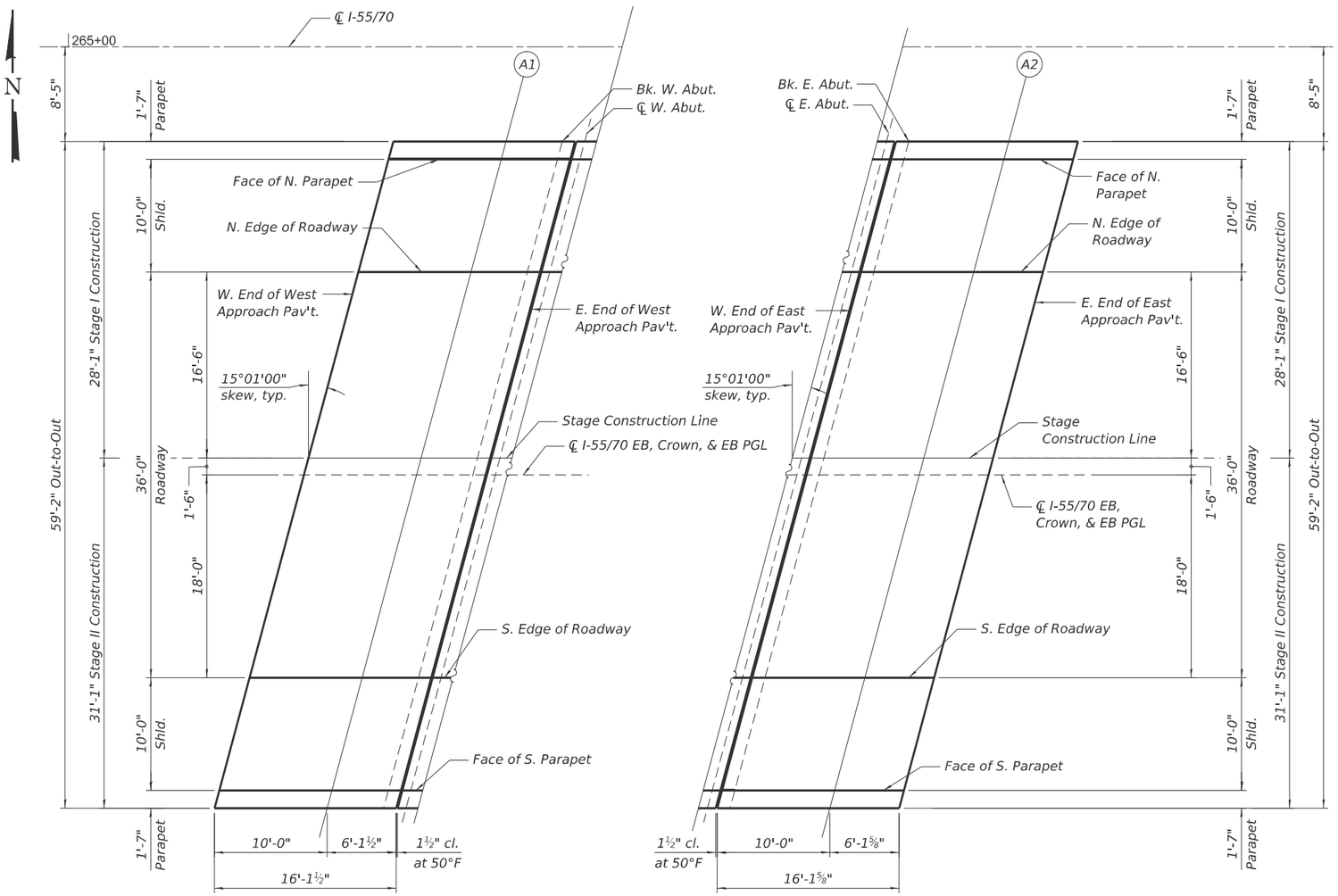

PLAN
WEST APPROACH SLAB

PLAN
EAST APPROACH SLAB

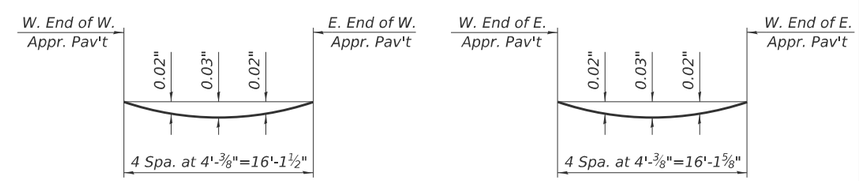

DEAD LOAD DEFLECTION DIAGRAM

(Includes weight of concrete, excluding beams).

Note:
The above deflections are not to be used in the field if the engineer is working from the grade elevations adjusted for dead load deflections as shown below.

MODEL: Top of App Slab Elev
FILE NAME: pw://jacobs-uts-va-pw.bentley.com:jacobs-uts-va-pw-04/Documents/D3152206.02 - ILDOT - I-55 I-70 Rehabilitation\30 Project Data\PID\STI\Collins\Sht\060-0006 & 060-0007\D876E46-sht-006-060006&060007-Top of Appr Slabs (SN 060-0006)

11/24/2025 8:41:20 AM

COLLINS ENGINEERS INC.

USER NAME = kzalewski	DESIGNED - KGZ	REVISED -	
	CHECKED - AEK	REVISED -	
PLOT SCALE = $SCALE$	DRAWN - DR	REVISED -	
PLOT DATE = 11/24/2025	CHECKED - 2025/10/03	REVISED -	

STATE OF ILLINOIS
DEPARTMENT OF TRANSPORTATION

TOP OF APPROACH SLAB ELEVATIONS (SN 060–0006)
STRUCTURE NO. 060–0006 & 060–0007

SHEET 6 OF 16 SHEETS

F.A.I. RTE.	SECTION	COUNTY	TOTAL SHEETS	SHEET NO.
70	82-(5,6)RS-2, 60-6RS-2	MADISON & ST. CLAIR	678	477
		CONTRACT NO. 76E84		
		ILLINOIS	FED. AID PROJECT	

FACE OF NORTH PARAPET

Location	Station	Offset	Theoretical Grade Elevations	Theoretical Grade Elevations Adjusted for Dead Load Deflection
W. End of West Appr. Pav't.	265+49.79	-28.00	428.86	428.86
A1	265+59.79	-28.00	428.91	428.91
E. End of West Appr. Pav't.	265+65.92	-28.00	428.94	428.94
W. End of East Appr. Pav't.	267+76.16	-28.00	429.17	429.17
A2	267+86.16	-28.00	429.14	429.15
E. End of East Appr. Pav't.	267+92.30	-28.00	429.13	429.13

NORTH EDGE OF ROADWAY

Location	Station	Offset	Theoretical Grade Elevations	Theoretical Grade Elevations Adjusted for Dead Load Deflection
W. End of West Appr. Pav't.	265+47.11	-18.00	429.06	429.06
A1	265+57.11	-18.00	429.11	429.11
E. End of West Appr. Pav't.	265+63.24	-18.00	429.14	429.14
W. End of East Appr. Pav't.	267+73.48	-18.00	429.38	429.38
A2	267+83.48	-18.00	429.36	429.36
E. End of East Appr. Pav't.	267+89.62	-18.00	429.34	429.34

℄ I-55/70 WB, CROWN, & WB PGL

Location	Station	Offset	Theoretical Grade Elevations	Theoretical Grade Elevations Adjusted for Dead Load Deflection
W. End of West Appr. Pav't.	265+42.28	0.00	429.31	429.31
A1	265+52.28	0.00	429.37	429.37
E. End of West Appr. Pav't.	265+58.41	0.00	429.39	429.39
W. End of East Appr. Pav't.	267+68.65	0.00	429.67	429.67
A2	267+78.65	0.00	429.65	429.65
E. End of East Appr. Pav't.	267+84.79	0.00	429.64	429.64

STAGE CONSTRUCTION LINE

Location	Station	Offset	Theoretical Grade Elevations	Theoretical Grade Elevations Adjusted for Dead Load Deflection
W. End of West Appr. Pav't.	265+41.88	1.50	429.29	429.29
A1	265+51.88	1.50	429.34	429.34
E. End of West Appr. Pav't.	265+58.01	1.50	429.37	429.37
W. End of East Appr. Pav't.	267+68.25	1.50	429.65	429.65
A2	267+78.25	1.50	429.63	429.63
E. End of East Appr. Pav't.	267+84.39	1.50	429.61	429.61

SOUTH EDGE OF ROADWAY

Location	Station	Offset	Theoretical Grade Elevations	Theoretical Grade Elevations Adjusted for Dead Load Deflection
W. End of West Appr. Pav't.	265+37.45	18.00	429.01	429.01
A1	265+47.45	18.00	429.06	429.06
E. End of West Appr. Pav't.	265+53.58	18.00	429.09	429.09
W. End of East Appr. Pav't.	267+63.82	18.00	429.40	429.40
A2	267+73.82	18.00	429.38	429.38
E. End of East Appr. Pav't.	267+79.96	18.00	429.37	429.37

FACE OF SOUTH PARAPET

Location	Station	Offset	Theoretical Grade Elevations	Theoretical Grade Elevations Adjusted for Dead Load Deflection
W. End of West Appr. Pav't.	265+34.77	28.00	428.79	428.79
A1	265+44.77	28.00	428.84	428.84
E. End of West Appr. Pav't.	265+50.90	28.00	428.87	428.87
W. End of East Appr. Pav't.	267+61.14	28.00	429.20	429.20
A2	267+71.14	28.00	429.18	429.18
E. End of East Appr. Pav't.	267+77.28	28.00	429.17	429.17

Note:
The elevations are calculated based on the roadway profile shown on Sheet 2. The approach slab shall be placed to match existing elevations. Contractor to verify the elevations and maintain a minimum slab thickness of 11-3/4". Grade elevations shown are prior to overlay being placed. The proposed approach top of slab elevation shall match existing top of slab elevations.

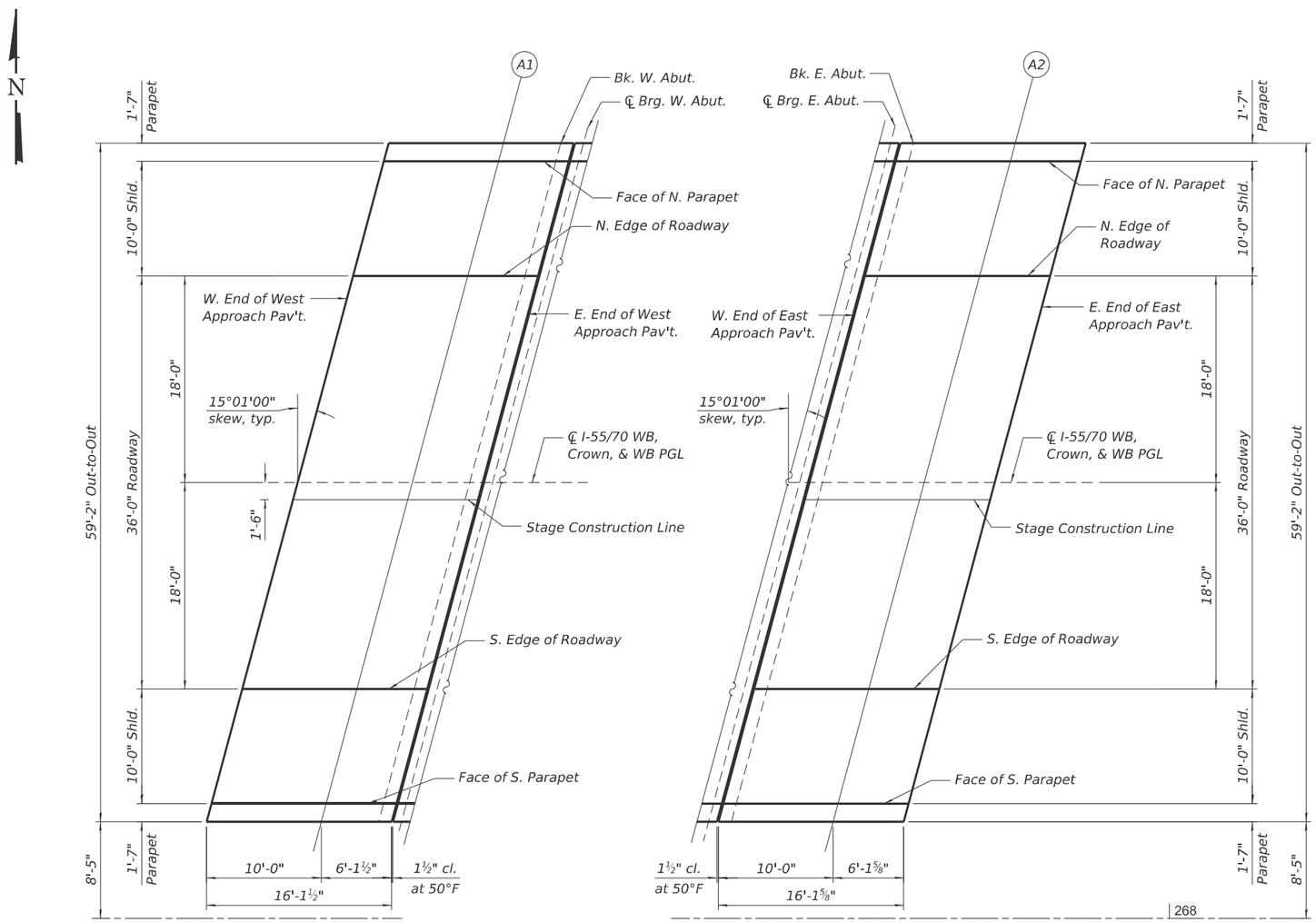

PLAN
WEST APPROACH SLAB

PLAN
EAST APPROACH SLAB

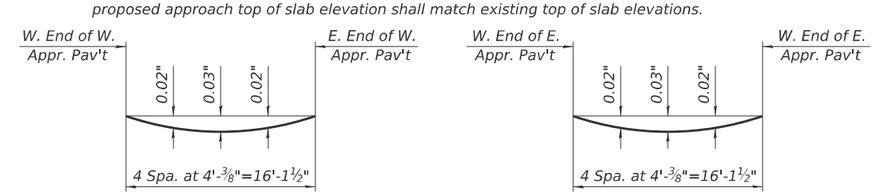

DEAD LOAD DEFLECTION DIAGRAM
(Includes weight of concrete, excluding beams).

Note:
The above deflections are not to be used in the field if the engineer is working from the grade elevations adjusted for dead load deflections as shown below.

MODEL: Top of App Slabs Elev
FILE NAME: pw://jacobs-us-pw.bentley.com:jacobs-us-pw-04/Documents/D3152206.02 - ILDOT - I-55 I-70 Rehabilitation/30 Project Data/PID/ST/Collins/Sht/060-0006 & 060-0007/D676E46-sht-007-060006&060007-Top of Appr Slabs (SN 060-0007)
11/24/2025 8:41:34 AM

COLLINS ENGINEERS INC

USER NAME = kzalewski	DESIGNED - KGZ	REVISED -	
	CHECKED - AEK	REVISED -	
PLOT SCALE = $SCALE$	DRAWN - DR	REVISED -	
PLOT DATE = 11/24/2025	CHECKED - 2025/10/03	REVISED -	

STATE OF ILLINOIS
DEPARTMENT OF TRANSPORTATION

TOP OF APPROACH SLAB ELEVATIONS (SN 060–0007)
STRUCTURE NO. 060–0006 & 060–0007

SHEET 7 OF 16 SHEETS

F.A.I. RTE.	SECTION	COUNTY	TOTAL SHEETS	SHEET NO.
70	82-(5,6)RS-2, 60-6RS-2	MADISON & ST. CLAIR	678	478
		CONTRACT NO. 76E84		
		ILLINOIS	FED. AID PROJECT	

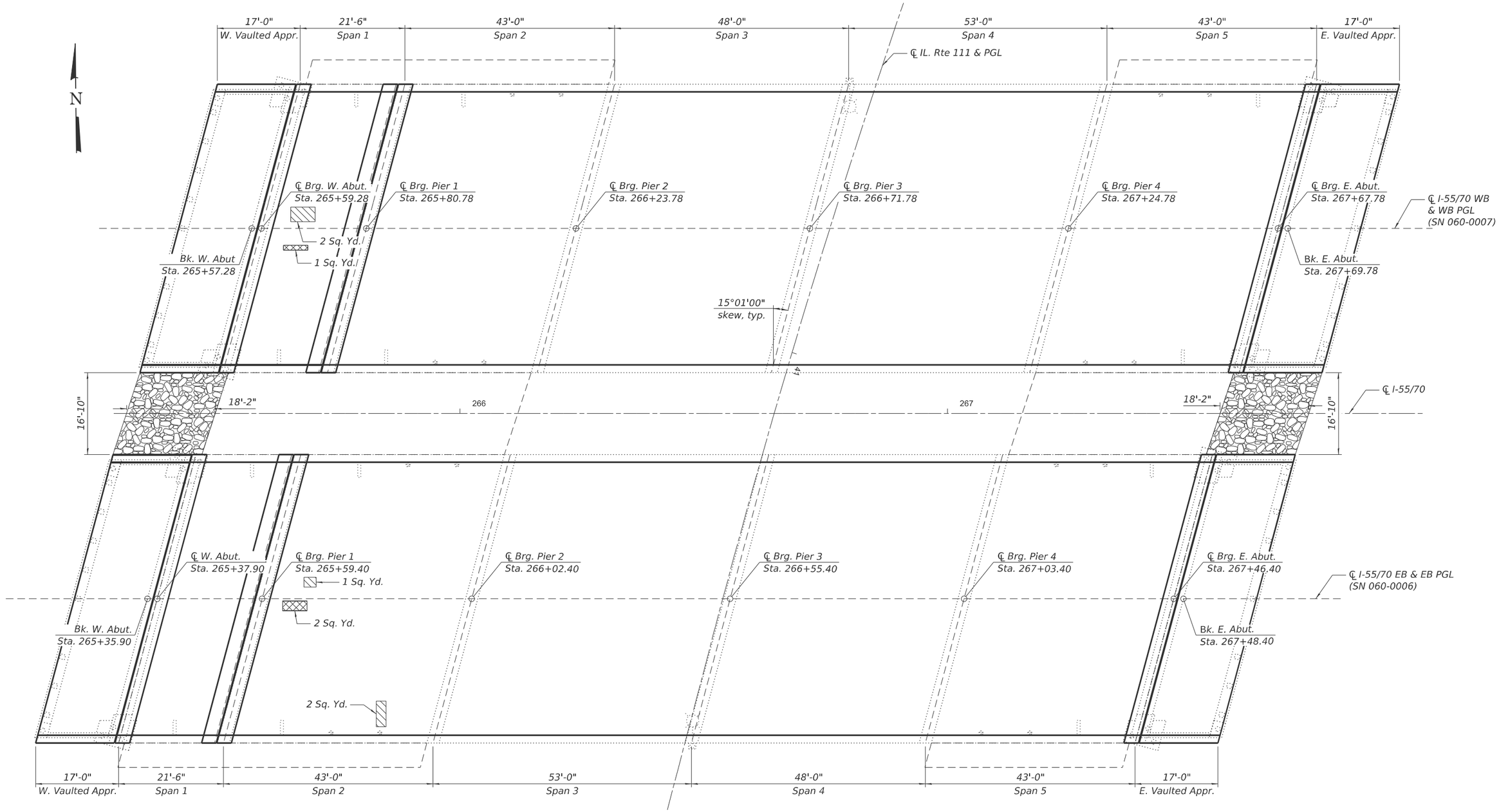

PLAN

LEGEND:

- Stone Dumped Riprap, Class A5
- Deck Slab Repair (Partial Depth)
- Deck Slab Repair (Full Depth)
- Sq. Yd. — Square Yard

BILL OF MATERIAL

ITEM	UNIT	QUANTITY		
		060-0006	060-0007	TOTAL
Stone Dumped Riprap, Class A5	Sq. Yd.	34	34	68
Deck Slab Repair (Full Depth, Type II)	Sq. Yd.	3	2	5
Deck Slab Repair (Partial)	Sq. Yd.	2	1	3

Notes:

1. The Engineer shall determine the final patch locations and quantities in the field before bridge deck patching operations begin. The Contractor shall show the size and locations of the deck repairs on the As-Built plans.

MODEL: Deck Repair Plan
FILE NAME: pw://jacobs-uis-vis-pw.bentley.com:jacobs-uis-vis-pw-04/Documents/D3152206.02 - ILLDOT - I-55 I-70 Rehabilitation/30 Project Data/PID/ST/Collins/Sht/060-0006 & 060-0007/D876E48-sht-008-060006&060007-Deck Repair Plan

11/24/2025 8:41:49 AM

COLLINS ENGINEERS INC.

USER NAME = kzalewski	DESIGNED - KGZ	REVISED -	STATE OF ILLINOIS DEPARTMENT OF TRANSPORTATION	DECK REPAIR PLAN STRUCTURE NO. 060–0006 & 060–0007
	CHECKED - AEK	REVISED -		
PLOT SCALE = $SCALE$	DRAWN - KGZ	REVISED -		
PLOT DATE = 11/24/2025	CHECKED - 2025/10/03	REVISED -		SHEET 8 OF 16 SHEETS

F.A.I. RTE.	SECTION	COUNTY	TOTAL SHEETS	SHEET NO.
70	82-(5,6)RS-2, 60-6RS-2	MADISON & ST. CLAIR	678	479
		CONTRACT NO. 76E84		
		ILLINOIS	FED. AID PROJECT	

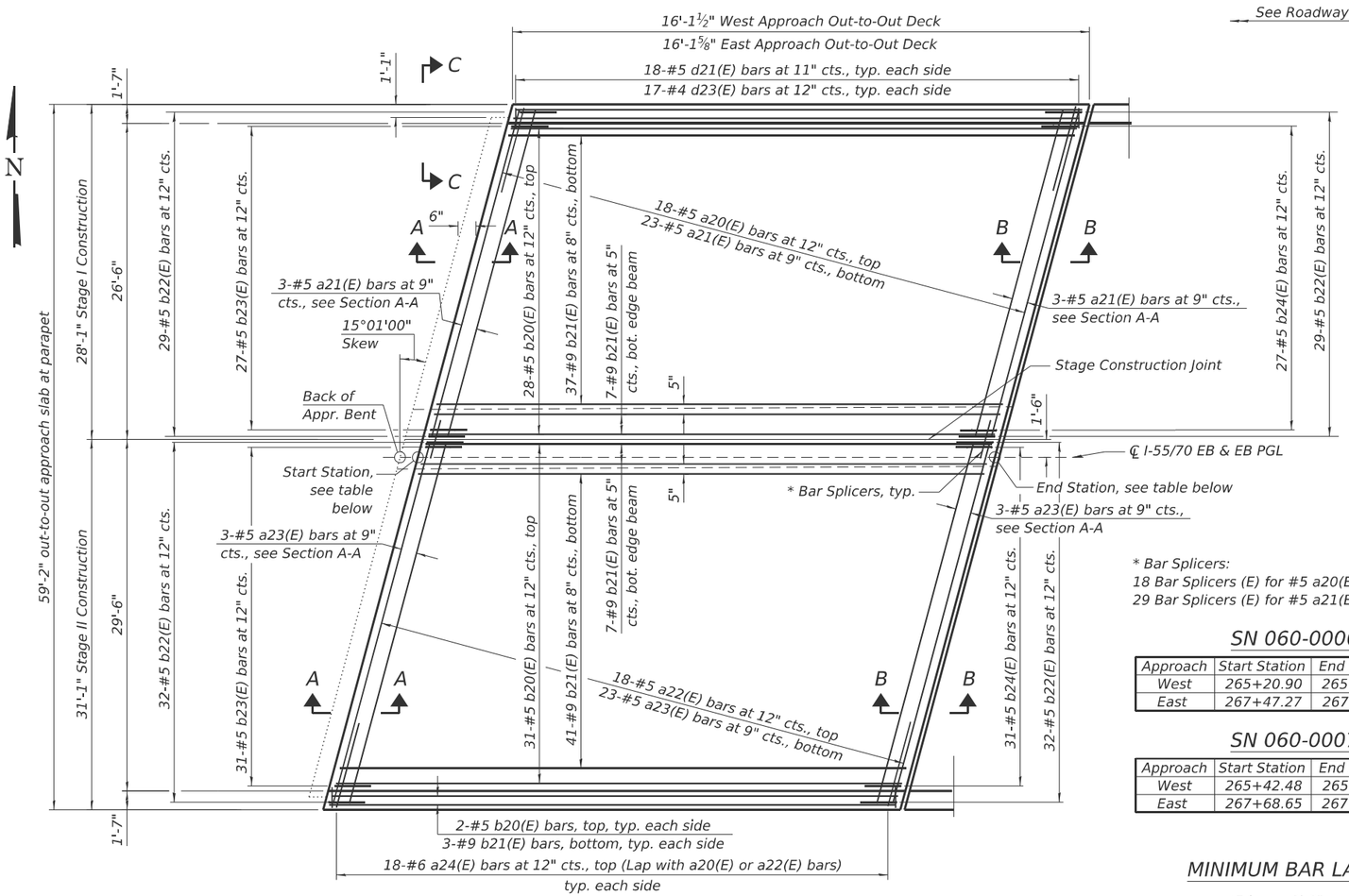

PLAN - WEST APPROACH SLAB

(East Approach similar)
(SN 060-0006 shown, SN 060-0007 similar mirrored about ℄ I-55/70)

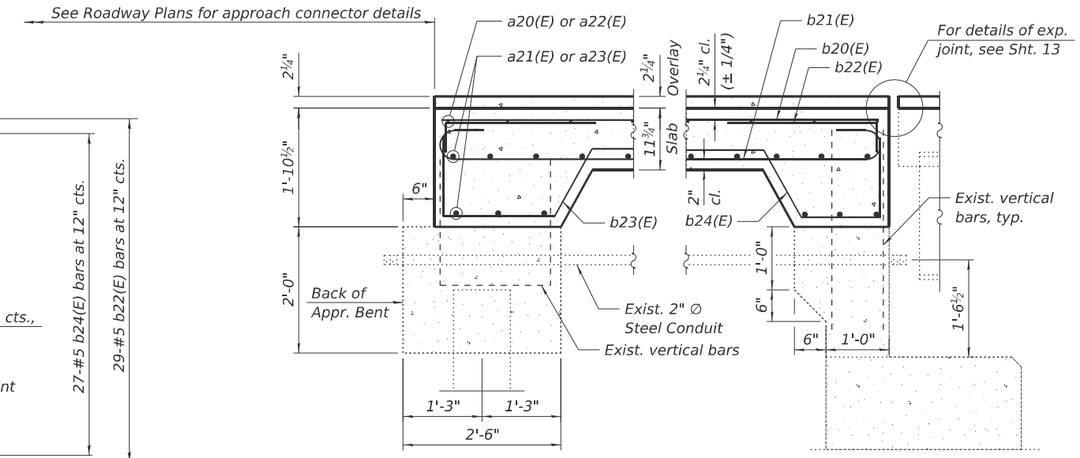

SECTION A-A

SECTION B-B

* Bar Splicers:
18 Bar Splicers (E) for #5 a20(E) &a22(E) bars, top
29 Bar Splicers (E) for #5 a21(E) & a23(E) bars, bottom

SN 060-0006

Approach	Start Station	End Station	Offset
West	265+20.90	265+37.03	0.00
East	267+47.27	267+63.41	0.00

SN 060-0007

Approach	Start Station	End Station	Offset
West	265+42.48	265+58.61	0.00
East	267+68.65	267+84.79	0.00

MINIMUM BAR LAP

#5 bar = 3'-0"

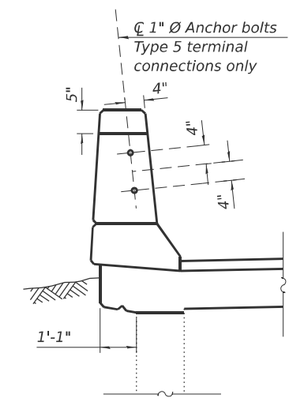

SECTION C-C

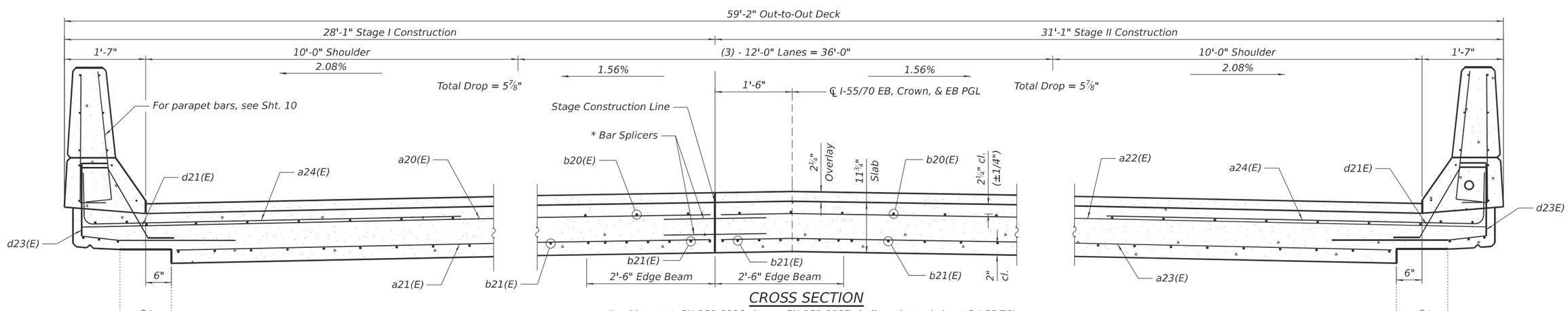

CROSS SECTION

(Looking east. SN 060-0006 shown, SN 060-0007 similar mirrored about ℄ I-55/70)

MODEL: Approach Slab Details I
FILE NAME: pw://jacobs-us-va-pw.bentley.com:jacobs-us-va-pw-04/Documents/D3152206.02 - ILDOT - I-55 I-70 Rehabilitation/30 Project Data/PID/ST/Collins/Sht/060-0006 & 060-0007/D676E46-sht-009-060006&060007-Approach Slab Details I
11/24/2025 8:42:02 AM

COLLINS ENGINEERS INC

USER NAME = kzalewski	DESIGNED - KGZ	REVISED -	
	CHECKED - AEK	REVISED -	
PLOT SCALE = $SCALE$	DRAWN - DR	REVISED -	
PLOT DATE = 11/24/2025	CHECKED - 2025/10/03	REVISED -	

STATE OF ILLINOIS
DEPARTMENT OF TRANSPORTATION

VAULTED APPROACH SLAB DETAILS I
STRUCTURE NO. 060–0006 & 060–0007

SHEET 9 OF 16 SHEETS

F.A.I. RTE.	SECTION	COUNTY	TOTAL SHEETS	SHEET NO.
70	82-(5,6)RS-2, 60-8RS-2	MADISON & ST. CLAIR	678	480

CONTRACT NO. 76E84

ILLINOIS FED. AID PROJECT

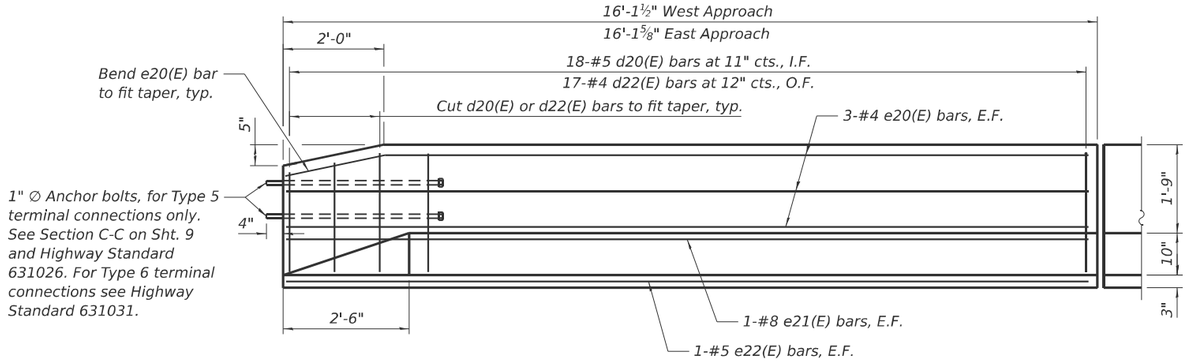

INSIDE ELEVATION OF PARAPET

Notes:

1. Parapet concrete shall be paid for as "Concrete Superstructure." The rest of the approach concrete shall be paid for as "Concrete Superstructure (Approach Slab)."
2. Existing Reinforcement bars extending into the removal area shall be cleaned, straightened, and incorporated into the new construction. Any reinforcement bars that are damaged during concrete removal shall be replaced with an approved bar splicer or anchorage system at the contractor's expense.

TWO APPROACH SLABS - ONE STRUCTURE BILL OF MATERIAL

Bar	No.	Size	Length	Shape
a20(E)	36	#5	28'-9"	
a21(E)	58	#5	26'-7"	
a22(E)	36	#5	31'-10"	
a23(E)	58	#5	29'-9"	
a24(E)	72	#6	8'-4"	
b20(E)	126	#5	15'-9"	
b21(E)	196	#9	18'-3"	
b22(E)	244	#5	3'-3"	
b23(E)	116	#5	7'-0½"	
b24(E)	116	#5	6'-6½"	
d20(E)	72	#5	3'-0"	
d21(E)	72	#5	2'-7"	
d22(E)	68	#4	3'-0"	
d23(E)	68	#4	4'-11"	
e20(E)	24	#4	15'-9"	
e21(E)	8	#8	15'-9"	
e22(E)	8	#5	15'-9"	
Polymerized Hot-Mix Asphalt Surface Course		Ton	17	
Concrete Superstructure		Cu. Yd.	6.5	
Concrete Superstructure (Approach Slab)		Cu. Yd.	85.0	
Reinforcement Bars, Epoxy Coated		Pound	24,030	
Full Lane Sealant Waterpoofing System		Sq. Yd.	201	
Bridge Deck Concrete Sealer		Sq. Ft.	213	

Note: Quantities shown for one structure.

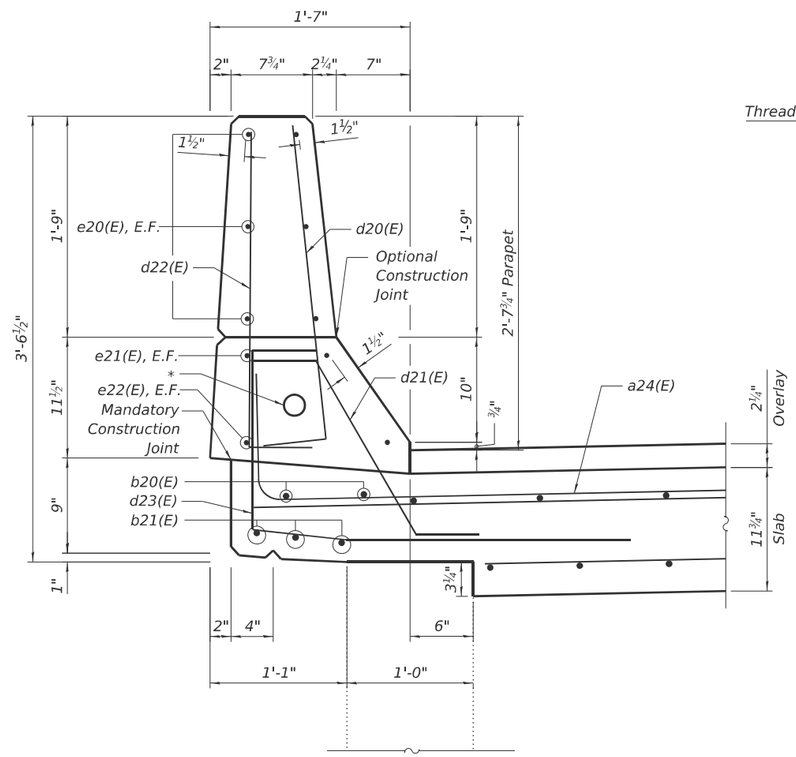

SECTION THRU PARAPET

Note: Cut bars as necessary to fit at parapet taper ends

* 2" PVC Conduit in North Parapet of SN 060-0007 and South Parapet of SN 060-0007 only

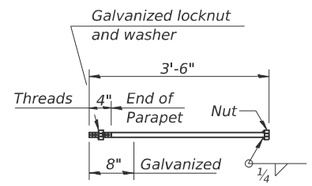

1" Ø ANCHOR BOLT

(Cost included with Concrete Superstructure.)

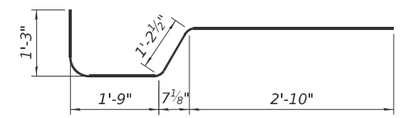

b23(E) BAR

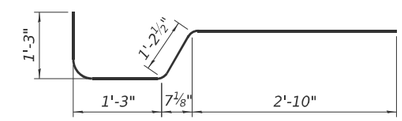

b24(E) BAR

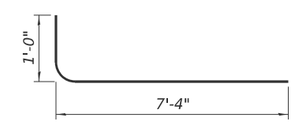

a24(E) BAR

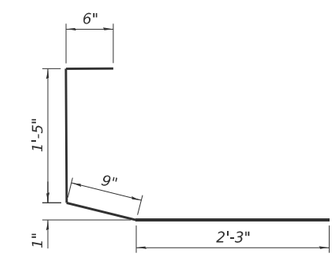

BAR d23(E)

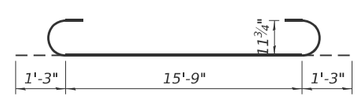

b21(E) BAR

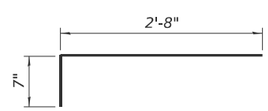

b22(E) BAR

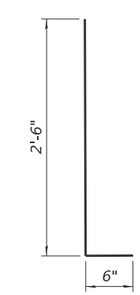

BARS d20(E) & d22(E)

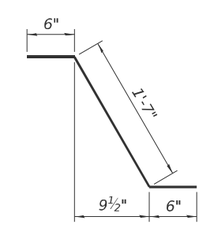

BAR d21(E)

MODEL: Approach Slab Details II
FILE NAME: pw://jacobs-uts-vas-pw.bentley.com:jacobs-uts-vas-pw-04/Documents/D3152206.02 - ILDOT - I-55 I-70 Rehabilitation\30 Project Data\PID\STT\Collins\Sht\060-0006 & 060-0007\D876E46-sht-010-060006&060007-Approach Slab Details II

11/24/2025 8:42:14 AM

COLLINS ENGINEERS INC.

USER NAME = kzalewski	DESIGNED - KGZ	REVISED -	
	CHECKED - AEK	REVISED -	
PLOT SCALE = $SCALE$	DRAWN - DR	REVISED -	
PLOT DATE = 11/24/2025	CHECKED - 2025/10/03	REVISED -	

STATE OF ILLINOIS
DEPARTMENT OF TRANSPORTATION

VAULTED APPROACH SLAB DETAILS II
STRUCTURE NO. 060–0006 & 060–0007

SHEET 10 OF 16 SHEETS

F.A.I. RTE.	SECTION	COUNTY	TOTAL SHEETS	SHEET NO.
70	82-(5,6)RS-2, 60-6RS-2	MADISON & ST. CLAIR	678	481
		CONTRACT NO. 76E84		
		ILLINOIS	FED. AID PROJECT	

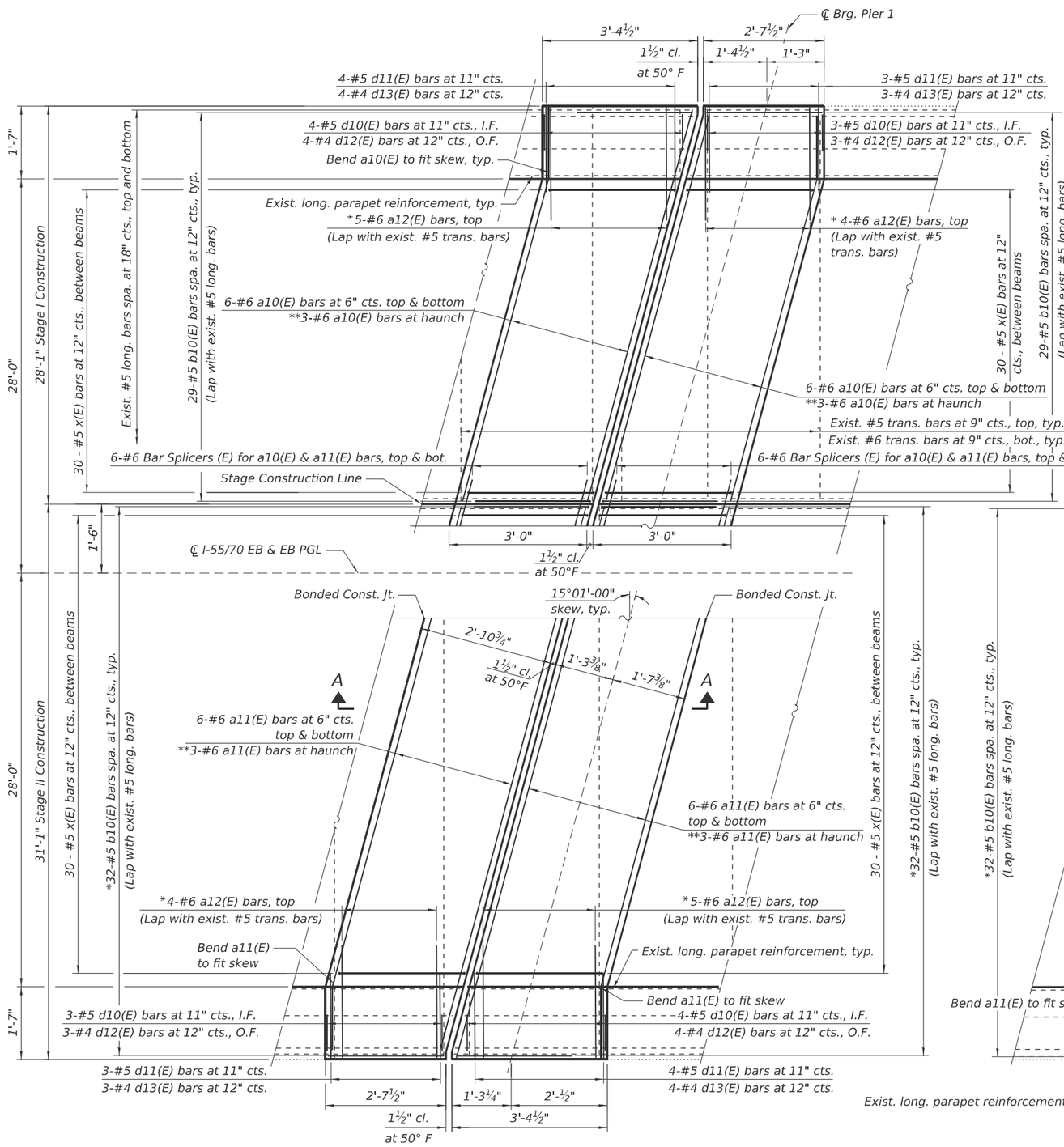

PIER 1 EXP. JOINT

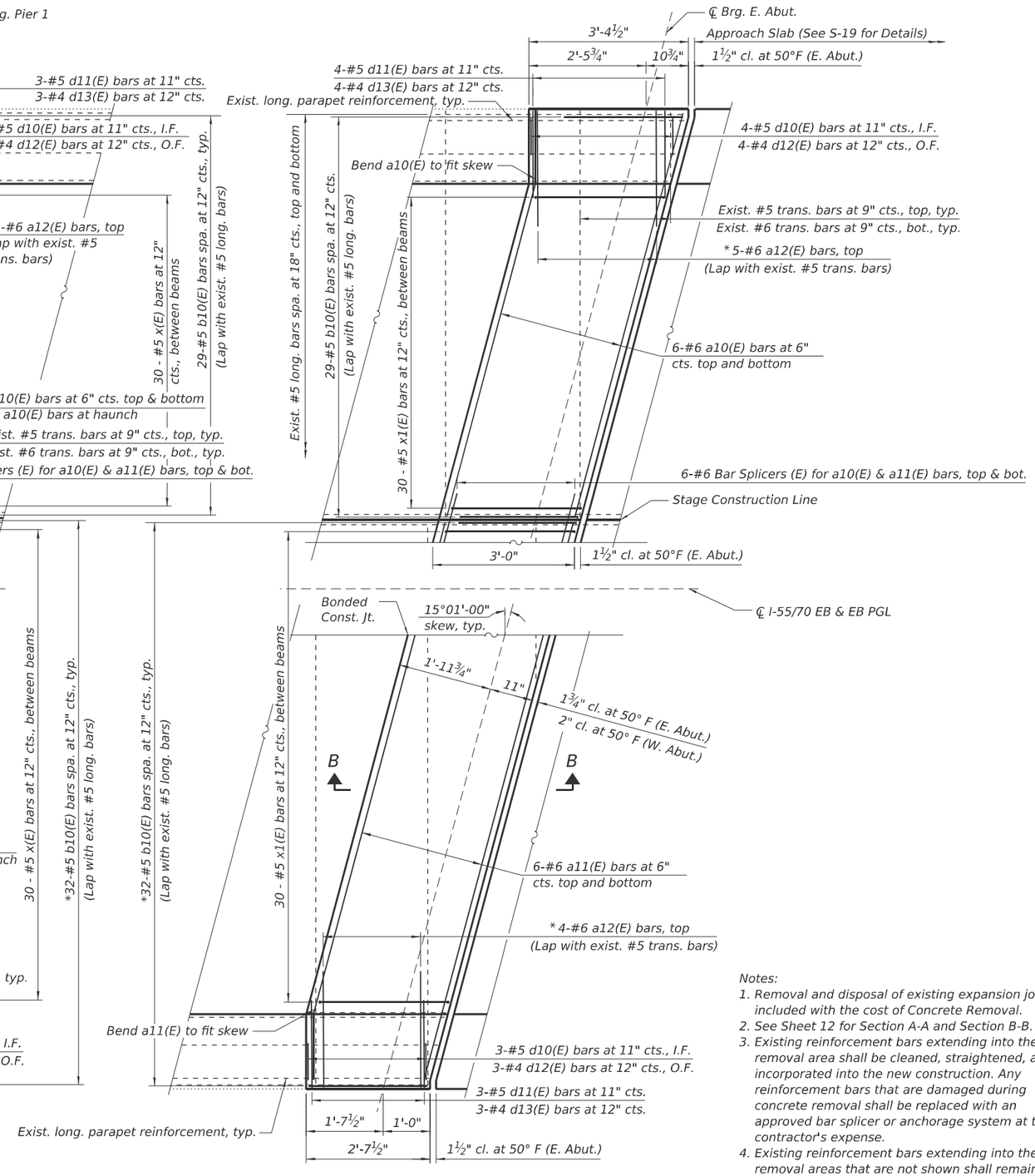

PARTIAL PLAN

(Showing joint reconstruction)
(SN 060-0006 shown, SN 060-0007 similar mirrored about ℄ I-55/70)

ABUTMENT EXP. JOINT

(East Abutment shown, West Abutment similar rotated 180°)

Notes:
1. Removal and disposal of existing expansion joints included with the cost of Concrete Removal.
2. See Sheet 12 for Section A-A and Section B-B.
3. Existing reinforcement bars extending into the removal area shall be cleaned, straightened, and incorporated into the new construction. Any reinforcement bars that are damaged during concrete removal shall be replaced with an approved bar splicer or anchorage system at the contractor's expense.
4. Existing reinforcement bars extending into the removal areas that are not shown shall remain.

* Trim to fit bars as necessary
** Cut bars in haunch to fit 2" cl. of web btwn. beams

COLLINS ENGINEERS INC.

USER NAME = kzalewski	DESIGNED - KGZ	REVISED -	
	CHECKED - AEK	REVISED -	
PLOT SCALE = $SCALE$	DRAWN - KGZ	REVISED -	
PLOT DATE = 11/24/2025	CHECKED - 2025/10/03	REVISED -	

STATE OF ILLINOIS
DEPARTMENT OF TRANSPORTATION

JOINT RECONSTRUCTION DETAILS I
STRUCTURE NO. 060–0006 & 060–0007

SHEET 11 OF 16 SHEETS

F.A.I. RTE.	SECTION	COUNTY	TOTAL SHEETS	SHEET NO.
70	82-(5,6)RS-2, 60-6RS-2	MADISON & ST. CLAIR	678	482

CONTRACT NO. 76E84
ILLINOIS FED. AID PROJECT

MODEL: Joint Reconstruction Details
FILE NAME: pw://jacobs-us-vis-pw.bentley.com:jacobs-us-vis-pw-04/Documents/D3152206.02 - ILDOT - I-55 I-70 Rehabilitation\30 Project Data\PID\ST\Collins\Sht\060-0006 & 060-0007\D876E48-sht-011-060006&060007-Joint Reconstruction Details
11/24/2025 8:42:28 AM

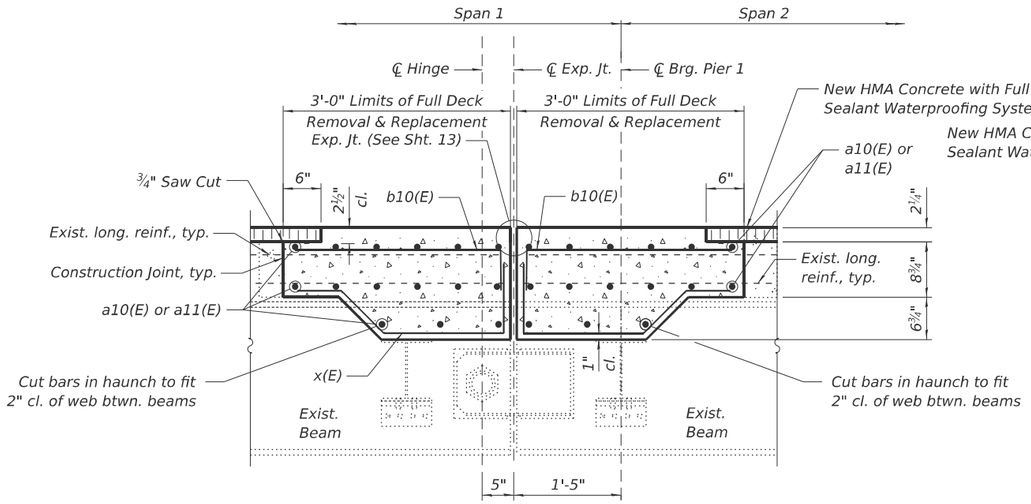

SECTION A-A

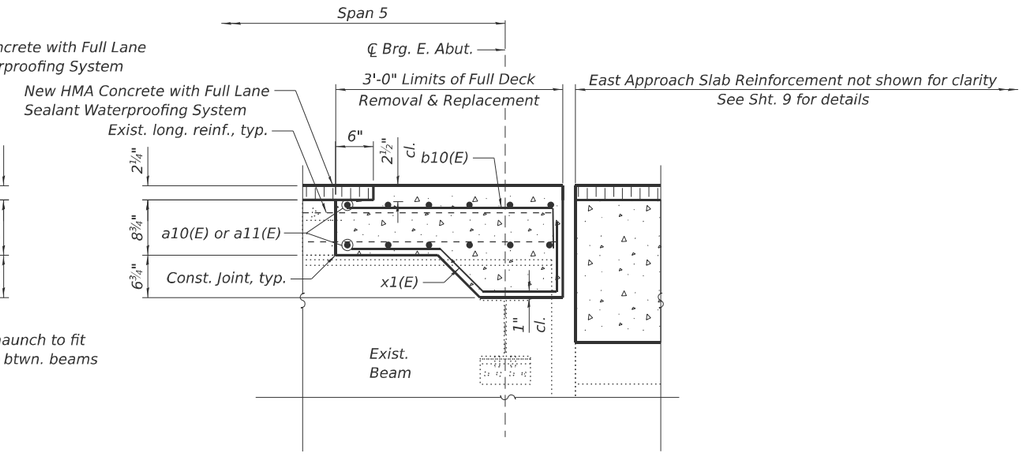

SECTION B-B

(East Abutment shown, West Abutment similar rotated 180°)

JOINT RECONSTRUCTION - 4 LOCATIONS - ONE STRUCTURE BILL OF MATERIAL

Bar	No.	Size	Length	Shape
a10(E)	54	#6	28'-9"	
a11(E)	54	#6	31'-10"	
a12(E)	36	#6	8'-4"	
b10(E)	244	#5	3'-1"	
d10(E)	28	#5	3'-0"	
d11(E)	28	#5	2'-7"	
d12(E)	28	#4	3'-0"	
d13(E)	28	#4	4'-3"	
x(E)	120	#5	3'-10½"	
x1(E)	120	#5	3'-10¼"	
Polymerized HMA Surface Course			Ton	2
Concrete Superstructure			Cu. Yds.	29.1
Reinforcement Bars, Epoxy Coated			Pound	7,420
Full Lane Sealant Waterproofing System			Sq. Yd.	12
Bridge Deck Concrete Sealer			Sq. Ft.	751

Note: Quantities shown for one structure.

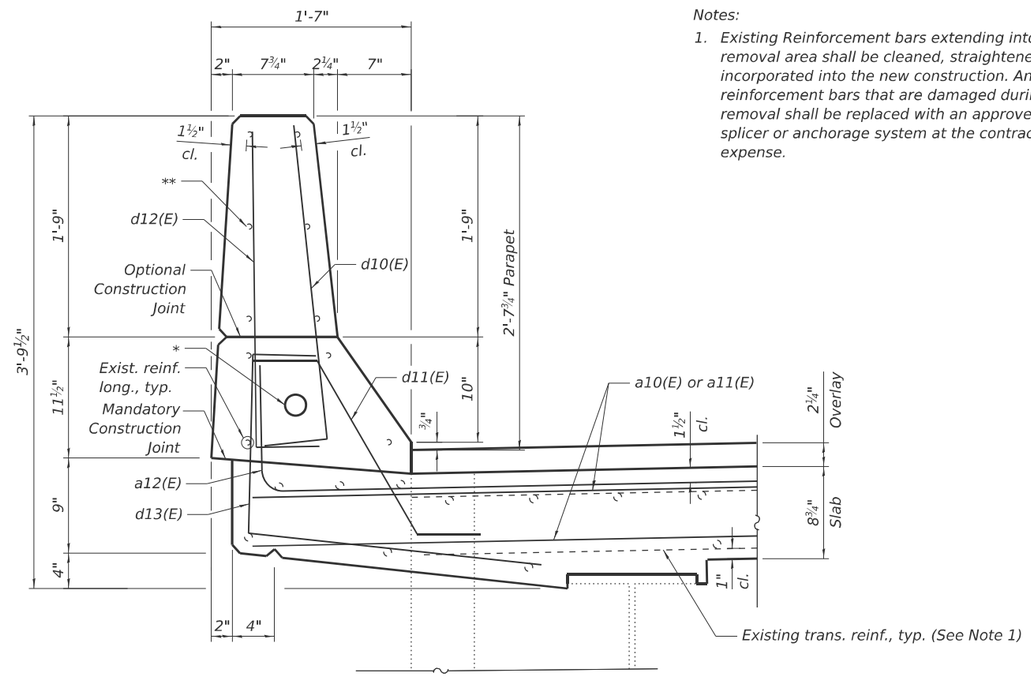

SECTION THRU PARAPET

* 2" PVC Conduit in North Parapet of SN 060-0007 and South Parapet of SN 060-0006 only

** Existing parapet reinforcement to incorporated into new parapet, typ.

Notes:

1. Existing Reinforcement bars extending into the removal area shall be cleaned, straightened, and incorporated into the new construction. Any reinforcement bars that are damaged during concrete removal shall be replaced with an approved bar splicer or anchorage system at the contractor's expense.

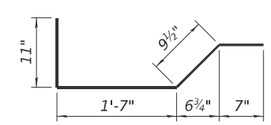

x(E) BAR

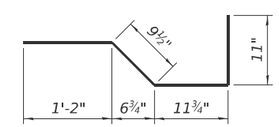

x1(E) BAR

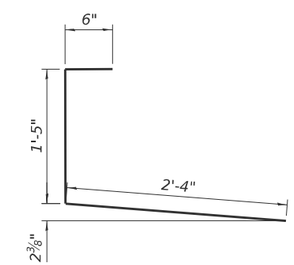

BAR d13(E)

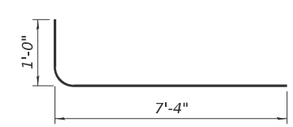

a12(E) BAR

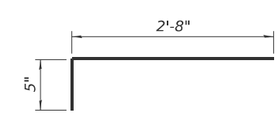

b10(E) BAR

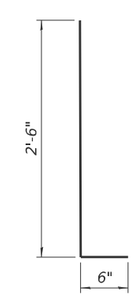

BARS d10(E) & d12(E)

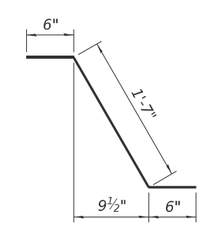

BAR d11(E)

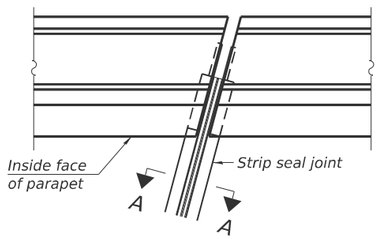

FOR SKEWS ≤ 30°

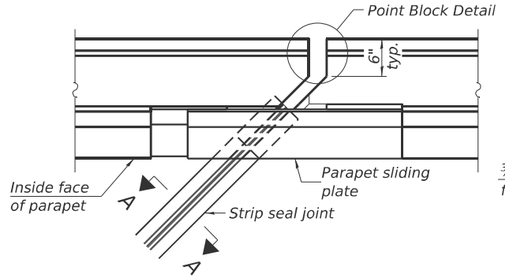

FOR SKEWS > 30°

PLAN AT PARAPET

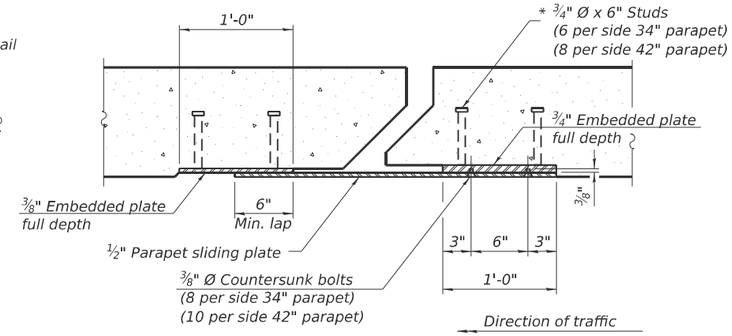

SECTION B-B

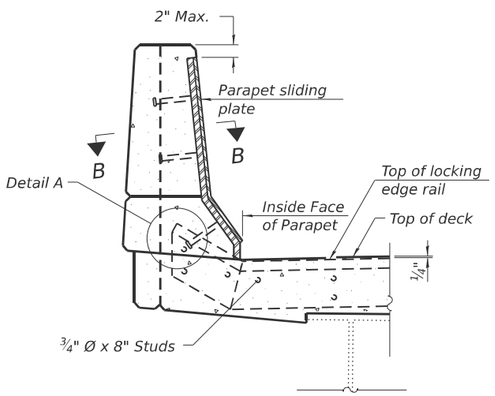

ELEVATION AT PARAPET

(Skews > 30° shown. Skews ≤ 30° similar except as shown in plan view.)

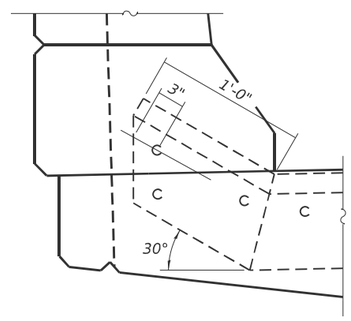

DETAIL A

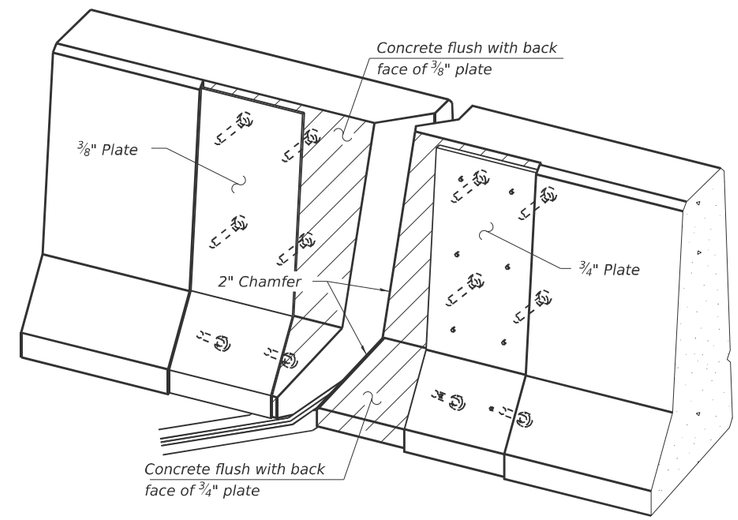

TRIMETRIC VIEW

(Showing embedded plates only)

Notes:

The strip seal shall be made continuous and shall have a minimum thickness of ¼". The configuration of the strip seal shall match the configuration of the locking edge rails. Open or "webbed" strip seal gland configurations are not permitted. The gland shall be sized for a maximum rated movement of 4 inches.

The locking edge rails depicted are configured for typical applications and are conceptual only. The actual configuration of the locking edge rails and matching strip seal may vary from manufacturer to manufacturer provided they fit the application and meet the minimum anchorage shown. Flanged edge rails, however, will not be allowed.

The manufacturer's recommended installation methods shall be followed.

All steel components shall be galvanized after fabrication according to Article 520.03 of the Standard Specifications.

The Maximum space between locking edge rail segments shall be 3/16" and sealed with a suitable sealant; however, any rail joint within 10' measured perpendicular to the face of the curb or parapet shall be welded as shown in the locking edge rail splice detail.

Cost of parapet sliding plates, embedded plates, and anchorage studs included with Preformed Joint Strip Seal.

34" F-shape barrier shown, 42" F-shape similar as noted.

The concrete opening below the strip seal will vary based on the locking edge rail chosen by the Contractor. Deck and parapet lengths shown elsewhere in the plans are dimensioned to the concrete opening, not the joint opening, and are based on the rolled locking edge rail. If the Contractor elects to use a different locking edge rail, dimensional adjustments may be required. One exception to this would be the strip seal joint at the end of the precast bridge approach slab. For these cases the pavement connector length shall be adjusted, not the length of the bridge approach slab.

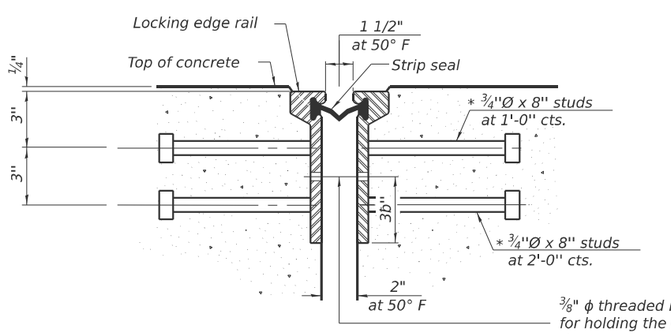

SHOWING ROLLED RAIL JOINT

⅜" ϕ threaded rods in 7/16" ϕ holes at ±4'-0" cts. for holding the proper joint opening based on the temperature during the deck pour. Place to miss studs. All rods shall be burned, or sawed off flush with the plates after concrete is set.

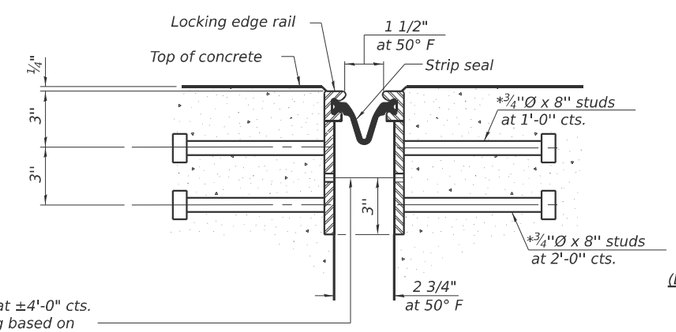

SHOWING WELDED RAIL JOINT

SECTION A-A

* Granular or solid flux filled headed studs conforming to Article 1006.32 of the Std. Specs., automatically end welded.

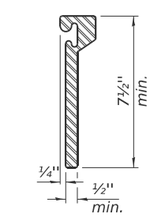

ROLLED
(EXTRUDED) RAIL

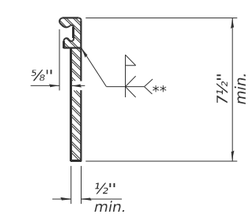

WELDED RAIL

LOCKING EDGE RAILS

** Back gouge not required if complete joint penetration is verified by mock-up.

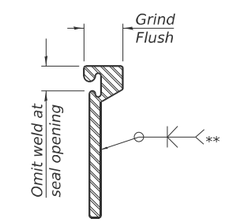

LOCKING EDGE RAIL SPLICE

The inside of the locking edge rail groove shall be free of weld residue. Rolled rail shown, welded rail similar.

BILL OF MATERIAL

Item	Unit	Quantity		
		060-0006	060-0007	Total
Preformed Joint Strip Seal	Foot	180.0	180.0	360.0

EJ-SS (TALL WITH GUTTER) 10-1-19

COLLINS ENGINEERS INC.

USER NAME = kzalewski	DESIGNED - KGZ	REVISED -	STATE OF ILLINOIS DEPARTMENT OF TRANSPORTATION	PREFORMED JOINT STRIP SEAL STRUCTURE NO. 060–0006 & 060–0007
	CHECKED - AEK	REVISED -		
PLOT SCALE = $SCALE$	DRAWN - DR	REVISED -		
PLOT DATE = 11/24/2025	CHECKED - 2025/10/03	REVISED -		SHEET 13 OF 16 SHEETS

F.A.I. RTE.	SECTION	COUNTY	TOTAL SHEETS	SHEET NO.
70	82-(5,6)RS-2, 60-6RS-2	MADISON & ST. CLAIR	678	484
		CONTRACT NO. 76E84		
		ILLINOIS	FED. AID PROJECT	

MODEL: Preformed Joint
FILE NAME: pw://jacobs-us-va-pw.bentley.com:jacobs-us-va-pw-04/Documents/D3152206.02 - ILDOT - I-55 I-70 Rehabilitation/30 Project Data/PID/ST/Collins/Sht/060-0006 & 060-0007/D676E46-sht-013-060000&060000?-Preformed Joint Strip Seal
11/24/2025 8:42:56 AM

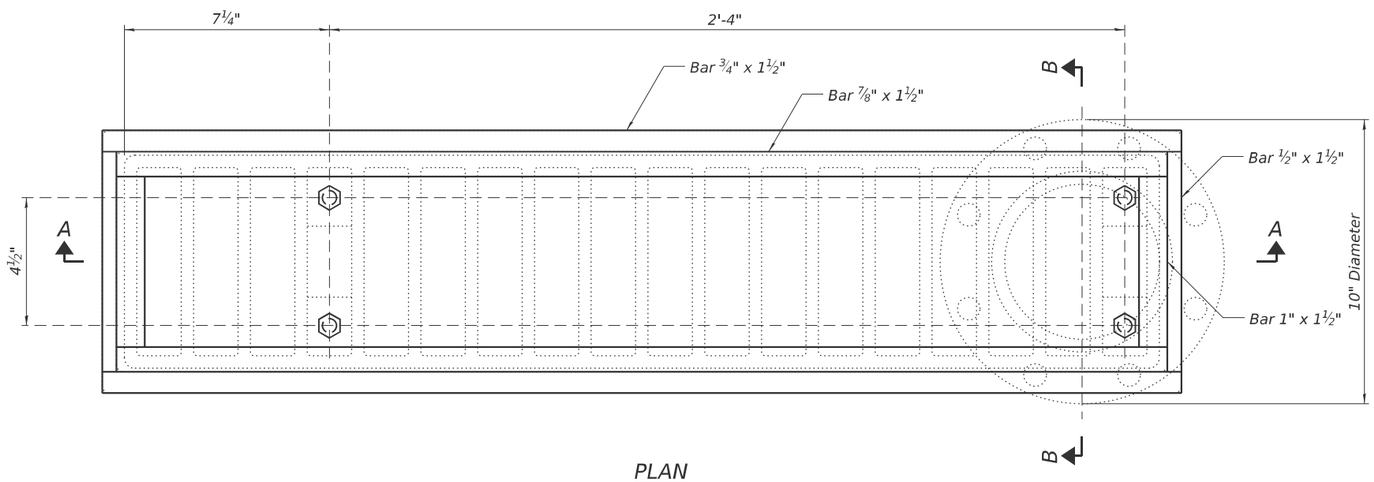

PLAN

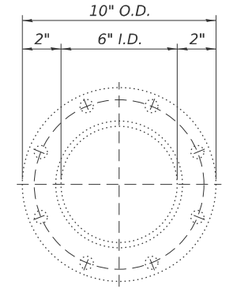

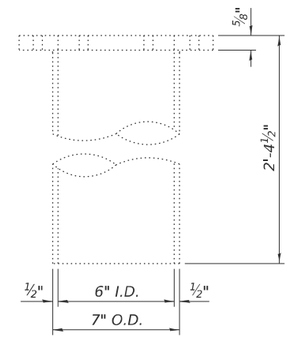

DOWNSPOUT

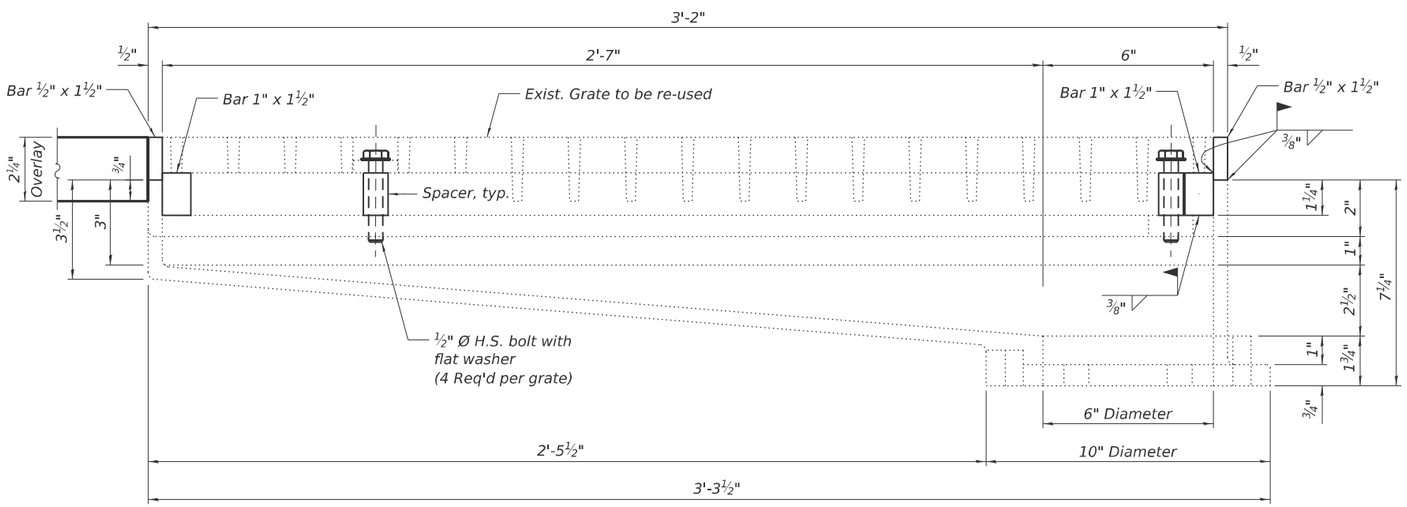

SECTION A-A

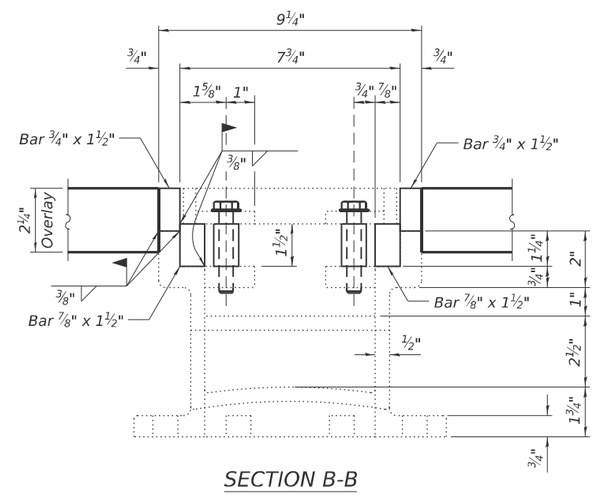

SECTION B-B

Note: Contractor shall verify if scuppers are cast iron or steel prior to adjusting.
Bill of Material for Drainage Scuppers to be Adjusted shown on Sheet 15.

MODEL: Drainage Scupper Details
FILE NAME: pw://jacobs-us-vis-pw.bentley.com:jacobs-us-vis-pw-04/Documents/D3152206.02 - ILDOT - I-55 I-70 Rehabilitation\30 Project Data\PID\ST/Collins\Sht\060-0006 & 060-0007\D876E48-sht-014-060006&060007-Drainage Scupper Details
11/24/2025 8:43:14 AM

COLLINS ENGINEERS INC.

USER NAME = kzalewski	DESIGNED - KGZ	REVISED -	
	CHECKED - AEK	REVISED -	
PLOT SCALE = $SCALE$	DRAWN - DR	REVISED -	
PLOT DATE = 11/24/2025	CHECKED - 2025/10/03	REVISED -	

STATE OF ILLINOIS
DEPARTMENT OF TRANSPORTATION

DRAINAGE SCUPPER DETAILS (CAST IRON)
STRUCTURE NO. 060–0006 & 060–0007

SHEET 14 OF 16 SHEETS

F.A.I. RTE.	SECTION	COUNTY	TOTAL SHEETS	SHEET NO.
70	82-(5,6)RS-2, 60-6RS-2	MADISON & ST. CLAIR	678	485
		CONTRACT NO. 76E84		
		ILLINOIS	FED. AID PROJECT	

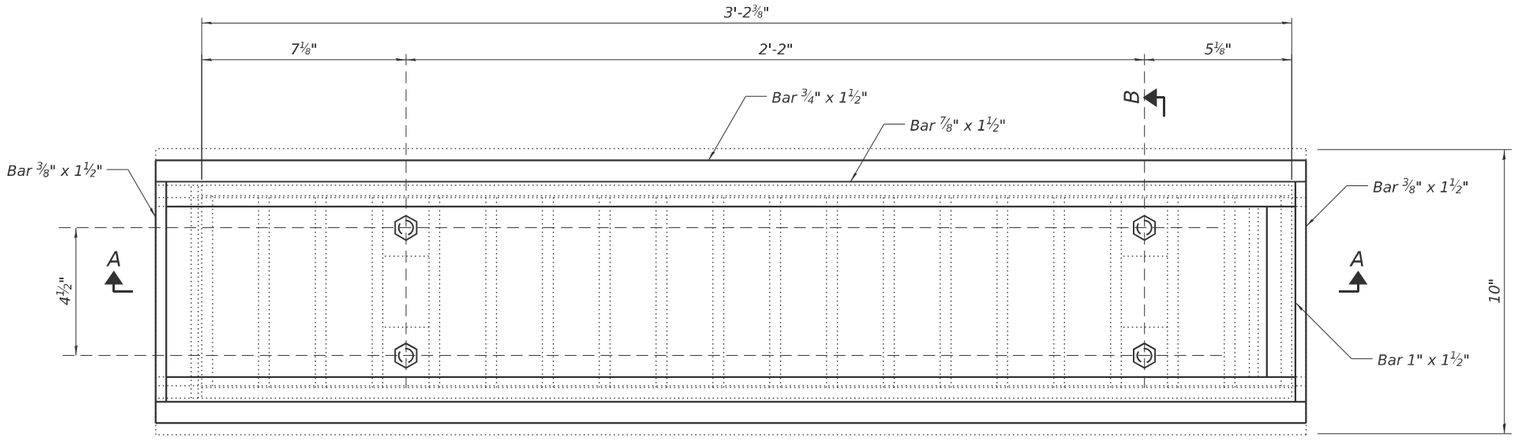

PLAN

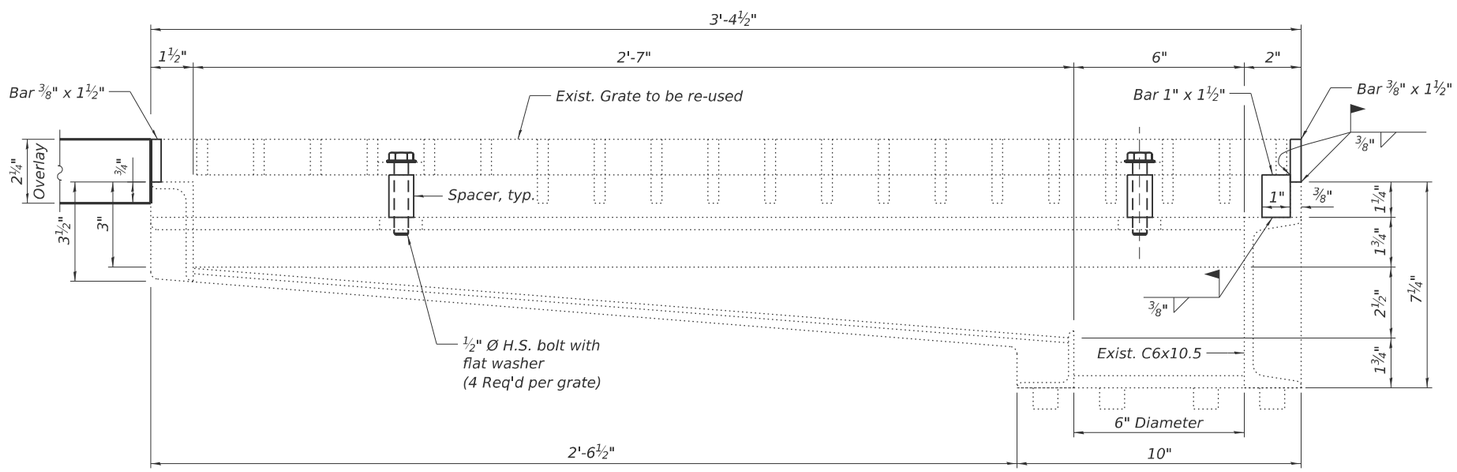

SECTION A-A

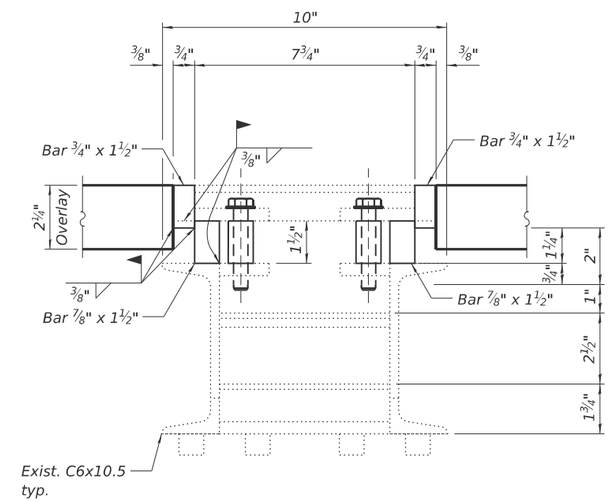

SECTION B-B

BILL OF MATERIAL

ITEM	UNIT	QUANTITY		
		060-0006	060-0007	TOTAL
Drainage Scuppers to be Adjusted	Each	6	6	12

Note: Contractor shall verify if scuppers are cast iron or steel prior to adjusting.

MODEL: Drainage Scupper Details
FILE NAME: pw://jacobs-ds-va-pw.bentley.com:jacobs-ds-va-pw-04/Documents/D3152206.02 - ILLDOT - I-55 I-70 Rehabilitation/30 Project Data/PID/ST/Collins/Sht/060-0006 & 060-0007/D676E48-sht-015-060006&060007-Drainage Scupper Details.dgn

COLLINS ENGINEERS INC.

USER NAME = kzalewski	DESIGNED - KGZ	REVISED -	STATE OF ILLINOIS DEPARTMENT OF TRANSPORTATION
	CHECKED - AEK	REVISED -	
PLOT SCALE = $SCALE$	DRAWN - DR	REVISED -	
PLOT DATE = 11/24/2025	CHECKED - 2025/10/03	REVISED -	

DRAINAGE SCUPPER DETAILS (STEEL)
STRUCTURE NO. 060–0006 & 060–0007

SHEET 15 OF 16 SHEETS

F.A.I. RTE.	SECTION	COUNTY	TOTAL SHEETS	SHEET NO.
70	82-(5,6)RS-2, 60-6RS-2	MADISON & ST. CLAIR	678	486
		CONTRACT NO. 76E84		
		ILLINOIS	FED. AID PROJECT	

11/24/2025 8:43:27 AM

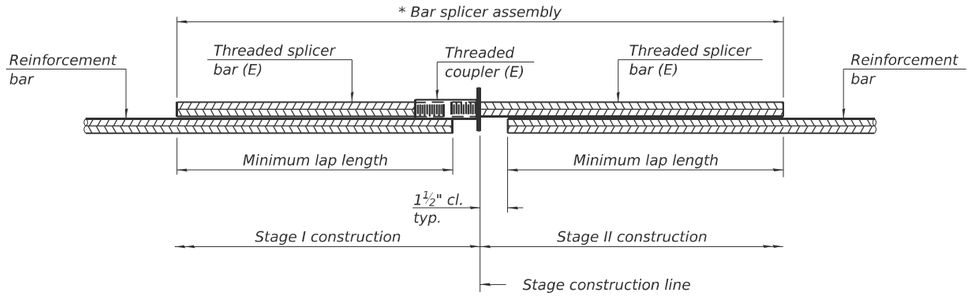

STANDARD BAR SPLICER ASSEMBLY PLAN

Only bar splicer assemblies as presented on the approved QPL list may be used.

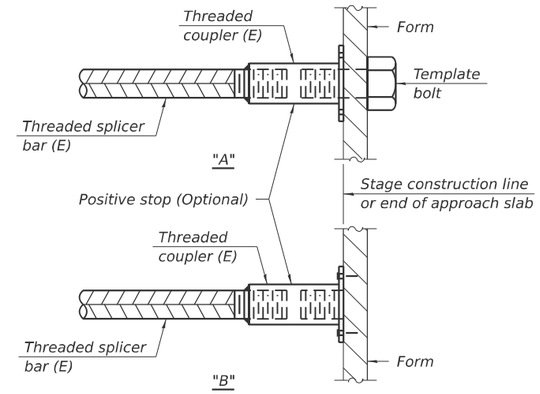

INSTALLATION AND SETTING METHODS

"A" : Set bar splicer assembly by means of a template bolt.
"B" : Set bar splicer assembly by nailing to wood forms or cementing to steel forms.
(E) : Indicates epoxy coating.

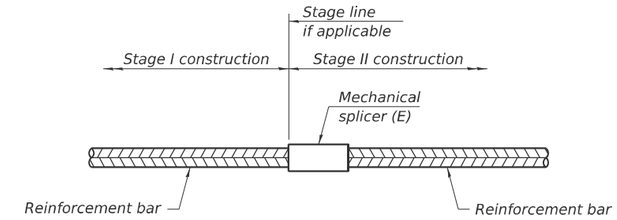

STANDARD MECHANICAL SPLICER

Threaded splicer bar length = min. lap length + 1½" + thread length

* Epoxy not required on Bar Splicer Assembly components used in conjunction with black bars.

Location	Bar size	No. assemblies required 060-0006	006-0007	TOTAL	Minimum lap length
Approach Slab	#5	94	94	188	3'-0"
Joint Reconstruction	#6	48	48	96	4'-2"

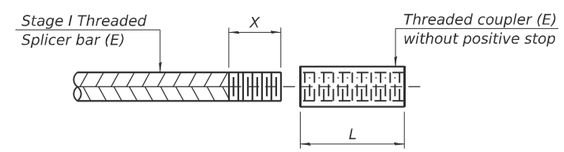

THREADING OF ASSEMBLIES

The threaded length "X" shall be no more than L/2. The bar should be tightened until 0-1 thread(s) is/are exposed.

Notes:
Splicer bars shall be deformed with threaded ends and have a minimum 60 ksi yield strength.
All reinforcement shall be lapped and tied to the splicer bars.
Bar splicer assemblies shall be epoxy coated according to the requirements for reinforcement bars. See Section 508 of the Standard Specifications.
See approved list of bar splicer assemblies and mechanical splicers for alternatives.

BSD-1 4-4-2025

Benchmark: BM 202: Set cut square on top of highway sign concrete base of south leg for "Attractions-Exit 6", just east of Sand Prairie Lane bridge over I-55/70. Elev. = 413.319'.

Existing Structures: SN 060-0010 & 060-0011 were built in 1960 as FAI Route 70, Section 60-6B. Rehabilitation of the structures occured in 1991 and consisted of widening the structure, replacing the deck, and and replacing all bearings. Another rehabilitation occured in 2009 and consisted of abutment expansion joint replacement and Pier 1 and 2 bearing work. The dual structures are 275'-10" long and consist of 3 spans (84'-1", 107'-8" and 84'-1") continous beams with a 67° 30' 00" skew. Roadways widths of 40'-8" and two 3'-10" parapets. The superstructure is composite steel wide flange beam with reinforced concrete deck. The substructure is stub abutments and pile bent piers on steel and concrete piles.

Traffic Control: Stage Construction.

No Salvage.

SCOPE OF WORK

1. Perform localized full depth repairs to the bridge deck.
2. Mill and hydo-demolition existing bridge deck and apply a Latex Concrete Overlay on the deck.
3. Clean scuppers and floor drains.
4. Clean and paint 5 linear feet of all beam ends at both abutments.
5. Remove and replace all expansion bearings at both abutments.
6. Convert existing abutments to semi-integral and provide new drainage system behind abutments.
7. Remove and replace all bridge approach slabs and footings.
8. Remove and replace pavement connector. See Roadway plans for details.

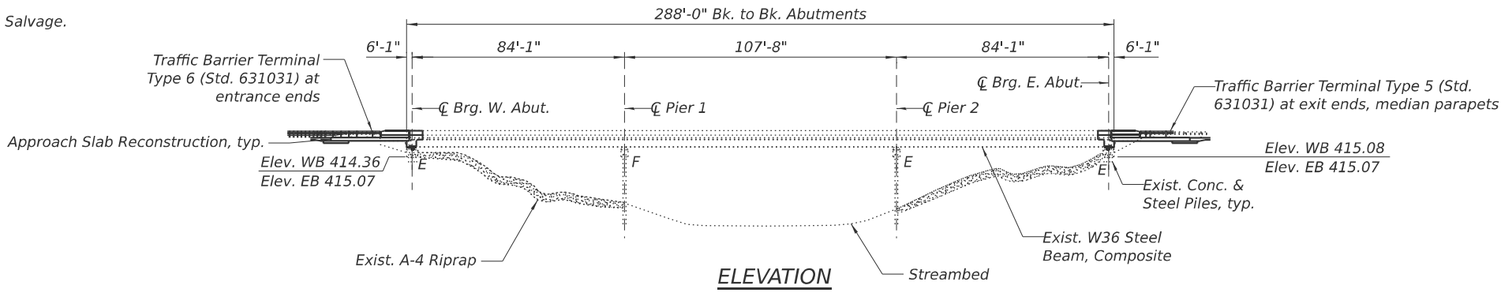

ELEVATION

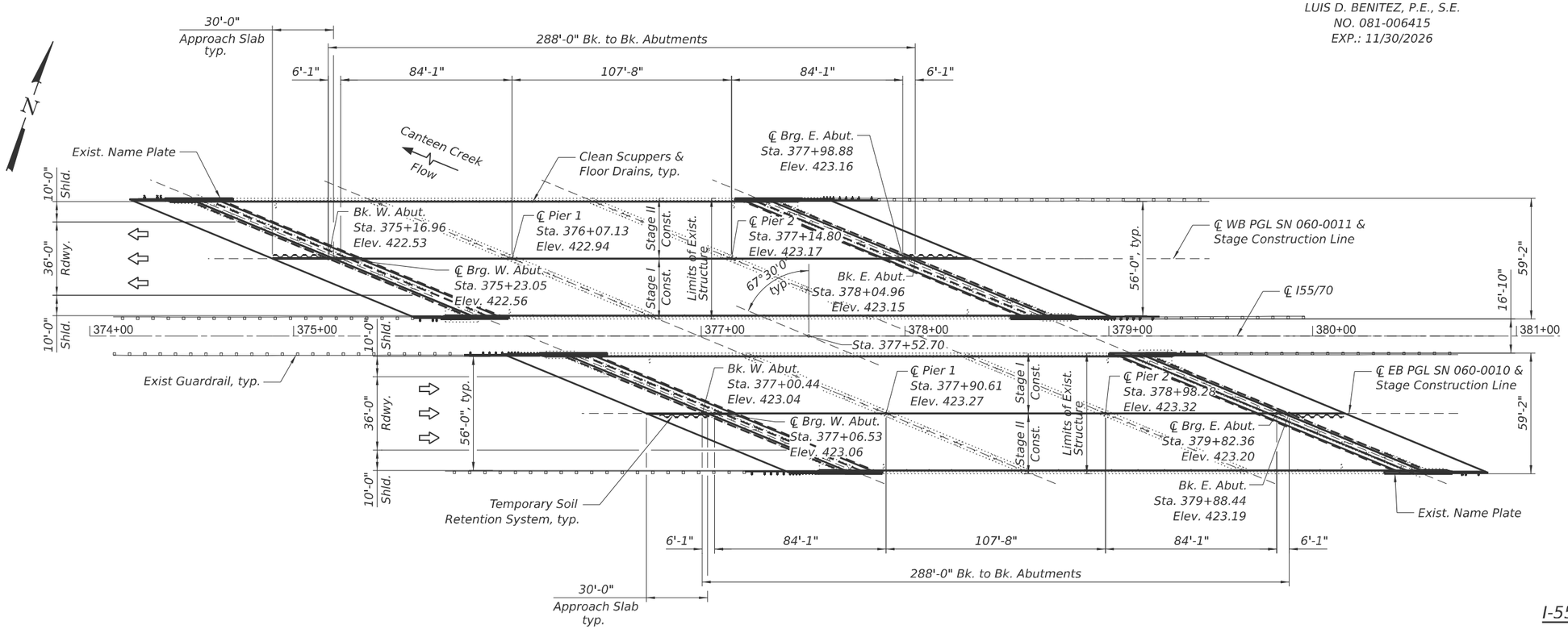

PLAN

COLLINS ENGINEERS, INC.
LUIS D. BENITEZ, P.E., S.E.
NO. 081-006415
EXP.: 11/30/2026

DESIGN SPECIFICATIONS

2002 AASHTO LFD Bridge Design Specifications, 17th Edition (New Construction)

DESIGN STRESSES

FIELD UNITS - NEW CONSTRUCTION

f 'c = 4,000 psi (Superstructure)
f 'c = 3,500 psi (Substructure)
fy = 60,000 psi (Reinforcement)
fy = 50,000 psi (Structural Steel - M270 Grade 50)

FIELD UNITS - EXISTING CONSTRUCTION

f 'c = 3,500 psi
fy = 60,000 psi (Reinforcement)
fy = 36,000 psi (Reconstruction Steel)
fy = 33,000 psi (Original Steel)

LOADING HS-20-44

(Original Construction)
No allowance for future wearing surface.

SEISMIC DATA

Seismic Performance Categoy (SPC) = B
Horizontal Bedrock Acceleration Coefficient (A) = 0.11g
Site Coefficient (S) = 1.0

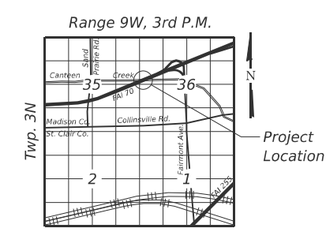

LOCATION SKETCH

GENERAL PLAN AND ELEVATION
I-55/70 EB & WB OVER CANTEEN CREEK
F.A.I. 70 - SECTION 60-6RS-2
MADISON COUNTY
STATION 377+52.70
SN: 060-0010 (EB) & 060-0011 (WB)

MODEL: General Plan and Elevation and TOC
FILE NAME: pw://jacobs-us-pw.bentley.com:jacobs-us-pw-04/Documents/D3152206.02 - ILDOT - I-55 I-70 Rehabilitation/30 Project Data/PID/ST/Collins/Sht/060-0010 & 060-0011/D876E45-sht-060001060060011-001-General Plan and Elevation

11/26/2025 1:40:53 PM

COLLINS ENGINEERS INC.

USER NAME = dredzlc	DESIGNED - CRM	REVISED -	
	CHECKED - EKM	REVISED -	
PLOT SCALE = $SCALE$	DRAWN - DR	REVISED -	
PLOT DATE = 11/26/2025	CHECKED - 2025/10/03	REVISED -	

STATE OF ILLINOIS
DEPARTMENT OF TRANSPORTATION

GENERAL PLAN AND ELEVATION
STRUCTURE NO. 060–0010 & 060–0011

SHEET S-1 OF S-20 SHEETS

F.A.I. RTE.	SECTION	COUNTY	TOTAL SHEETS	SHEET NO.
70	82-(5,6)RS-2, 60-6RS-2	MADISON & ST. CLAIR	678	488
		CONTRACT NO. 76E84		
	ILLINOIS	FED. AID PROJECT		

GENERAL NOTES

1. All new structural steel shall be AASHTO M270 Grade 50.

2. All new structural steel and bearing assemblies shall be galvanized. See Special Provision for "Hot Dip Galvanizing for Structural Steel".

3. Prior to pouring the new concrete deck, all heavy or loose rust, loose mill scale, and other loose detrimental foreign material shall be removed from the surfaces in contact with concrete (SSPC SP3 standards). Tightly adhered paint may remain unless otherwise noted. Removal shall be accomplished by methods that will not damage the steel and the cost will be paid for according to Article 109.04 of the Standard Specifications.

   As directed by the Engineer, existing construction accessories welded to the top flange of beams and girders shall be removed. The weld areas shall be ground flush and inspected for cracks using magnetic particle testing (MT) or dye penetrant testing (PT) by qualified personnel approved by the Engineer. Any cracks that cannot be removed by grinding ¼ in. deep shall be identified and reported to the Bureau of Bridges & Structures for further disposition. The cost of removing welded accessories, grinding and inspecting weld areas and grinding cracks will be paid for according to Article 109.04 of the Standard Specifications.

4. Reinforcement bars designated (E) shall be epoxy coated.

5. The Contractor shall obtain a construction permit from the Illinois Department of Natural Resources (IDNR), Office of Water Resources for any temporary construction activity placed in the water except cofferdams. This shall include the placement of material for run-arounds, causeways, etc. Any permit application by the Contractor shall refer to the IDNR 3704 Floodway Construction permit number allowing permanent construction as shown in the contract plans.

6. Plan dimensions and details relative to the existing structure have been taken from existing plans are subject to nominal construction variations. The Contractor shall field verify existing dimensions and details affecting new construction and make necessary approved adjustments prior to construction or ordering of materials. Such variations shall not be cause for additional compensation for a change in scope of the work, however, the Contractor will be paid for the quantity actually furnished at the unit price bid for the work.

7. Existing reinforcement bars extending into the removal areas shall be cleaned, straightened, and incorporated into the new construction. Any reinforcement bars to remain that are damaged during concrete removal operations shall be repaired or replaced using an approved bar splicer or anchorage system. Cost included with Concrete Removal.

8. The existing structural steel coating contains lead. The Contractor shall take appropriate precautions to address the presence of lead on this project.

9. The existing bearings contain lead plates. The Contractor shall take precautions to deal with the presence of lead on this project.

10. Cleaning and painting of the existing structural steel shall be as specified in the special provision for "Cleaning and Painting Existing Steel Structures". All beams, steel diaphragms, bearings and other structural steel within 5 ft (measured along the beam) at abutments shall be cleaned per Near White Blast Cleaning SSPC- SP10. The designated areas cleaned per Near White Blast Cleaning and per Commercial Grade Power Tool Cleaning shall be painted according to the requirements of the Organic Zinc-Rich / Epoxy / Urethane paint system. The color of the final finish coat for all steel surfaces shall be Gray, Munsell No 5B 7/1. Surfaces that will be in contact with concrete (top surface of beam flange, exist. steel diaphragms, and beam ends embedded in concrete diaphragm) shall be given one coat of primer and epoxy intermediate coat.

11. Cost of removal and disposal of existing expansion joints shall be included in the cost of Concrete Removal.

12. Joint openings shall be adjusted to Article 520.04 of the Std. Specs. when the deck concrete adjacent to joints is at an ambient temperature other than 50° F. See Sheet S-17.

13. Concrete sealer shall be applied to the exposed faces of concrete diaphragm, top surfaces of abutment bearing seats, and structural concrete repairs.

14. Existing Name Plates to be removed and reinstalled in new parapet concrete. Cost is included with Concrete Superstructure.

15. Existing conduit embedded in parapet if affected by the concrete removal shall be temporarily supported and embedded in new concrete. Cost of conduit removal and temporary support is included with Concrete Removal. New conduit installation is included in Concrete Superstructure.

16. The placement of the Bridge Deck Latex Concrete Overlay is recommended to be poured overnight.

INDEX OF SHEETS

S-1	General Plan and Elevation
S-2	General Notes, Index of Sheets, & Total Bill of Material
S-3	Staged Construction Details
S-4	Temporary Concrete Barrier
S-5	Temporary Soil Retention System and Removal Details I
S-6	Removal Details II
S-7	Top of Approach Slab Elevations (SN 060-0010)
S-8	Top of Approach Slab Elevations (SN 060-0011)
S-9	Deck Repair Plan and Details
S-10	Superstructure Details I
S-11	Superstructure Details II
S-12	Concrete Diaphragm
S-13	Abutment Details
S-14	West Abutment Bearing Details
S-15	East Abutment Bearing Details
S-16	Approach Slab Details I
S-17	Approach Slab Details II
S-18 - S-19	Drainage Scupper Details
S-20	Bar Splicer Assembly and Mechanical Splicer Details

TOTAL BILL OF MATERIAL

ITEM	UNIT	SN 060-0010	SN 060-0011	TOTAL
Concrete Removal	Cu. Yd.	117.0	117.0	234.0
Structure Excavation	Cu. Yd.	339	339	678
Concrete Structures	Cu. Yd.	93.8	93.8	187.6
Concrete Superstructure	Cu. Yd.	183.5	183.5	367.0
Bridge Deck Grooving	Sq.Yd.	2,132	2,132	4,264
Protective Coat	Sq.Yd.	2,196	2,196	4,392
Concrete Superstructure (Approach Slab)	Cu. Yd.	161.8	161.8	323.6
Furnishing And Erecting Structural Steel	Pound	4,260	4,230	8,490
Reinforcement Bars, Epoxy Coated	Pound	145,160	145,160	290,320
Bar Splicers	Each	344	344	688
Mechanical Splicers	Each	8	8	16
Elastomeric Bearing Assembly, Type I	Each	20	20	40
Anchor Bolts, 1"	Each	60	60	120
Temporary Soil Retention System	Sq. Ft.	187	187	374
Granular Backfill For Structures	Cu. Yd.	339	339	678
Concrete Sealer	Sq. Ft.	878	878	1,756
Geocomposite Wall Drain	Sq. Yd.	247	247	494
Concrete Headwalls for Pipe Drains	Each	4	4	8
Pipe Underdrains For Structures, 4"	Foot	340	340	680
Bar Terminators	Each	1,000	1,000	2,000
Cleaning Bridge Scuppers And Downspouts	Each	28	28	56
Drainage Scuppers to be Adjusted	Each	4	4	8
Jack And Remove Existing Bearings	Each	20	20	40
Approach Slab Removal	Sq. Yd.	1,327	1,327	2,654
Bridge Deck Latex Concrete Overlay, 3 Inches	Sq. Yd.	1,604	1,604	3,208
Containment And Disposal Of Lead Paint Cleaning Residues No. 5	L Sum	1		1
Containment And Disposal Of Lead Paint Cleaning Residues No. 6	L Sum		1	1
Cleaning And Painting Steel Bridge No. 5	L Sum	1		1
Cleaning And Painting Steel Bridge No. 6	L Sum		1	1
Bridge Deck Scarification, 1"	Sq. Yd	1,588	1,588	3,176
Structural Repair of Concrete (Depth Greater Than 5 Inches)	Sq. Ft.	140	140	280
Deck Slab Repair (Full Depth, Type II)	Sq. Yd.	30	30	60

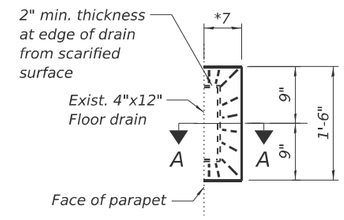

FLOOR DRAIN DETAIL

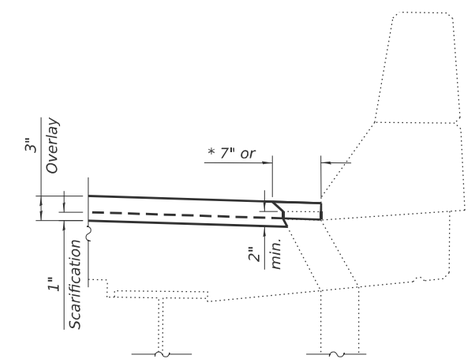

SECTION A-A

TREATMENT OF NEW CONCRETE OVERLAY AT FLOOR DRAINS

* Slope overlay to drain
For scupper adjustment, see Sheets S-18 and S-19.

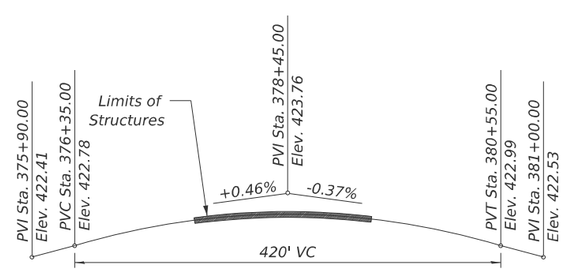

PROP. EB I-55/70 SN 060-0010 PROFILE GRADE

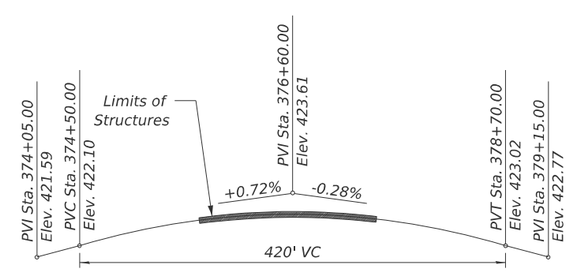

PROP. WB I-55/70 SN 060-0011 PROFILE GRADE

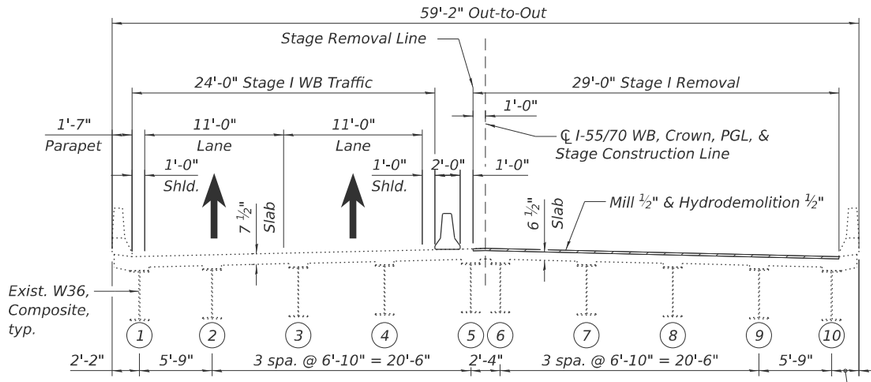

STAGE I REMOVAL WB

(SN 060-0011)

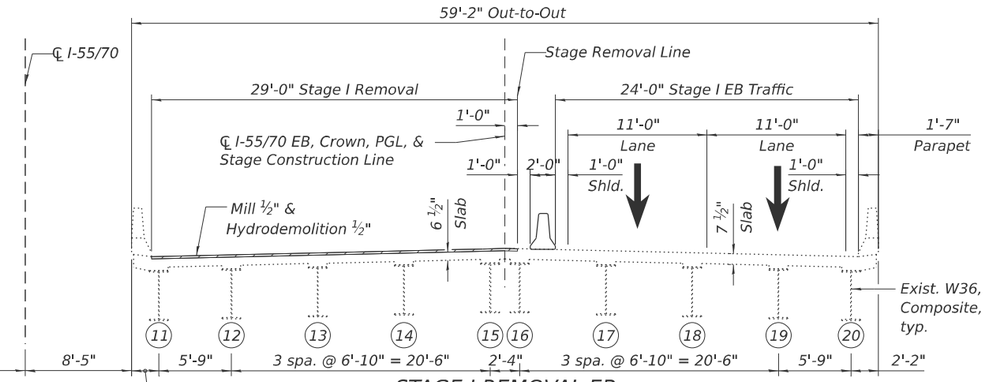

STAGE I REMOVAL EB

(SN 060-0010)

STAGE I REMOVAL

(Looking East)

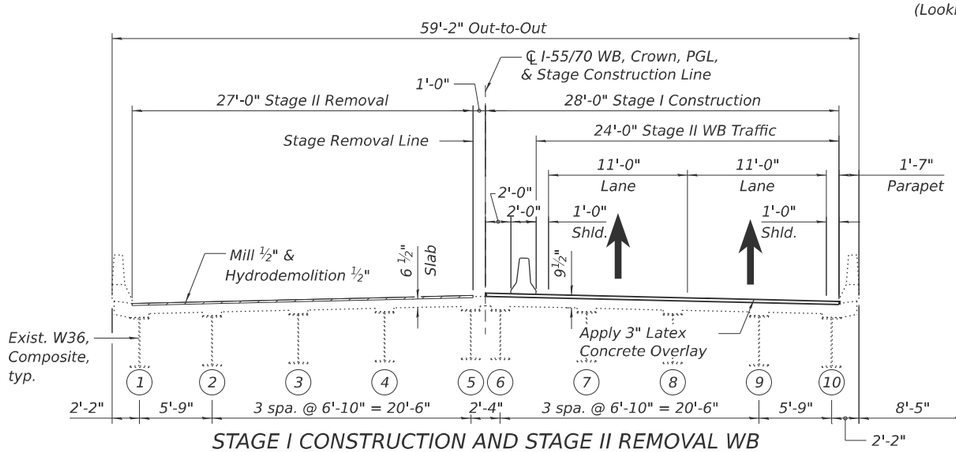

STAGE I CONSTRUCTION AND STAGE II REMOVAL WB

(SN 060-0011)

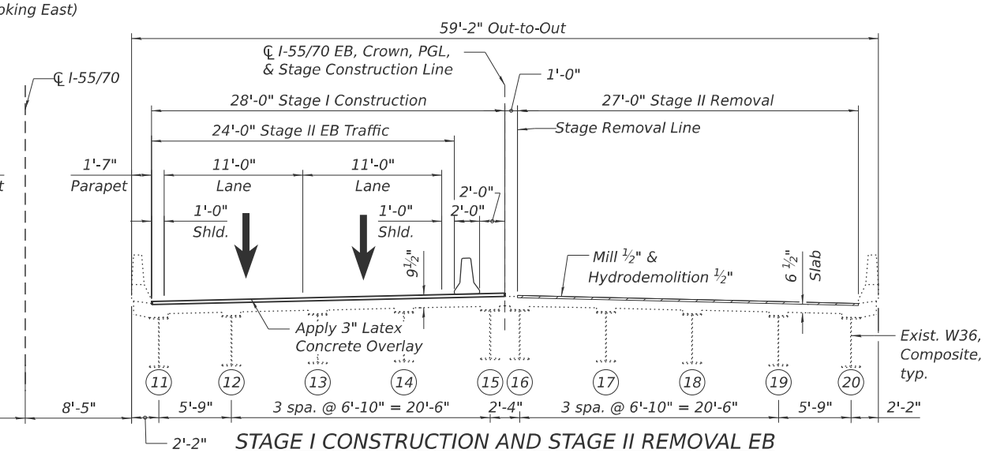

STAGE I CONSTRUCTION AND STAGE II REMOVAL EB

(SN 060-0010)

STAGE I CONSTRUCTION AND STAGE II REMOVAL

(Looking East)

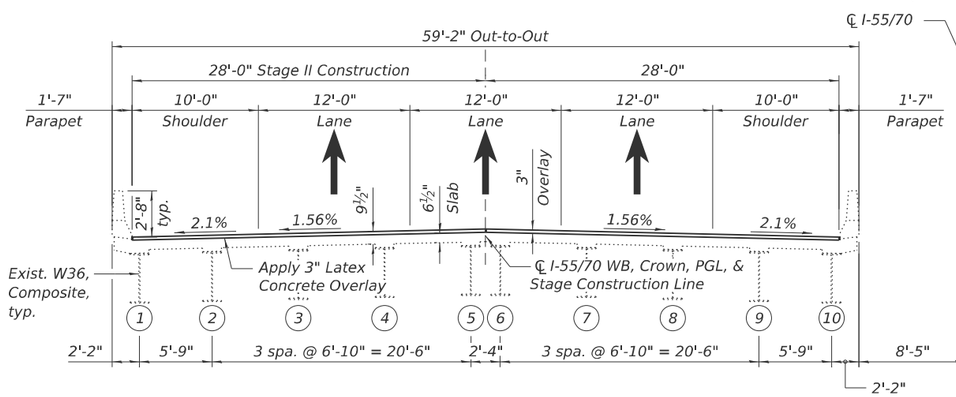

STAGE II CONSTRUCTION AND FINAL CROSS SECTION WB

(SN 060-0011)

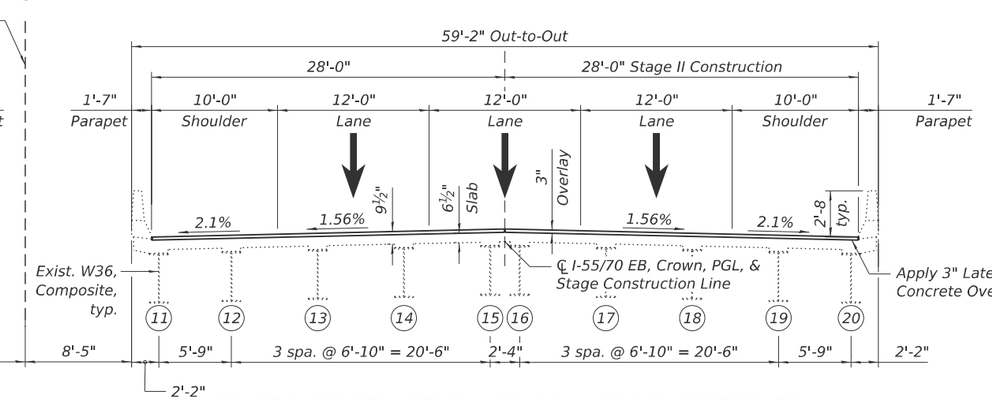

STAGE II CONSTRUCTION AND FINAL CROSS SECTION EB

(SN 060-0010)

STAGE II CONSTRUCTION AND FINAL CROSS SECTION

(Looking East)

LEGEND:

Temporary Concrete Barrier

Notes:

1. Full depth deck replacement at abutment diaphragms not shown for clarity.

MODEL: Staged Construction Details
FILE NAME: pw://jacobs-us-pw.bentley.com:jacobs-us-pw-04/Documents/D3152206.02 - ILDOT - I-55 I-70 Rehabilitation/30 Project Data/PID/ST/Collins/Sht/060-0010 & 060-0011/D876E45-sht-060001010&060001011-003-Staged Construction Details

11/25/2025 9:21:09 AM

COLLINS ENGINEERS INC

USER NAME = kzalewski	DESIGNED - CRM	REVISED -	
	CHECKED - EKM	REVISED -	
PLOT SCALE = $SCALE$	DRAWN - DR	REVISED -	
PLOT DATE = 11/25/2025	CHECKED - 2025/10/03	REVISED -	

STATE OF ILLINOIS
DEPARTMENT OF TRANSPORTATION

STAGED CONSTRUCTION DETAILS
STRUCTURE NO. 060–0010 & 060–0011

SHEET S-3 OF S-20 SHEETS

F.A.I. RTE.	SECTION	COUNTY	TOTAL SHEETS	SHEET NO.
70	82-(5,6)RS-2, 60-6RS-2	MADISON & ST. CLAIR	678	490
		CONTRACT NO. 76E84		
		ILLINOIS	FED. AID PROJECT	

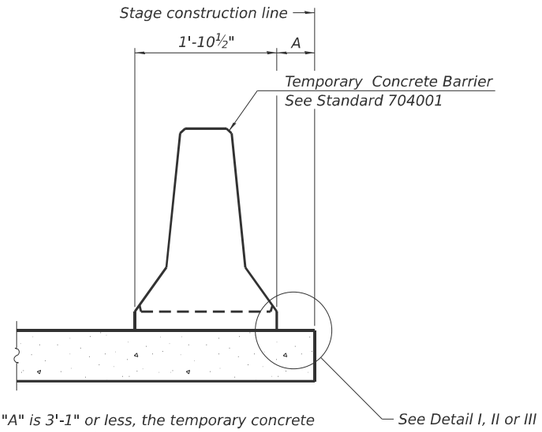

When "A" is 3'-1" or less, the temporary concrete barrier shall be restrained to the new slab according to Detail I, II or III. No restraint is required when "A" is greater than 3'-1".

NEW SLAB OR NEW DECK BEAM

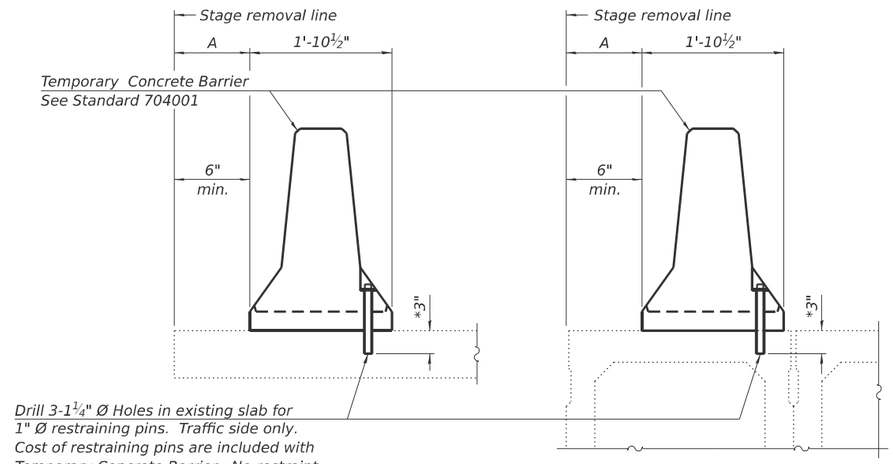

EXISTING SLAB

* When hot-mix asphalt wearing surface is present, embedment shall be 3" plus the wearing surface depth.

EXISTING DECK BEAM

SECTIONS THRU SLAB OR DECK BEAM

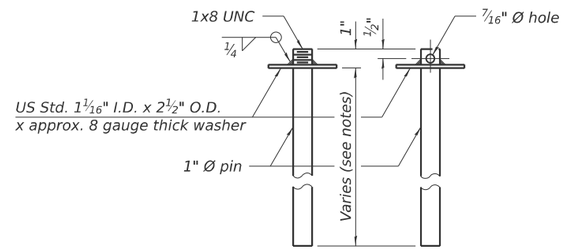

RESTRAINING PIN

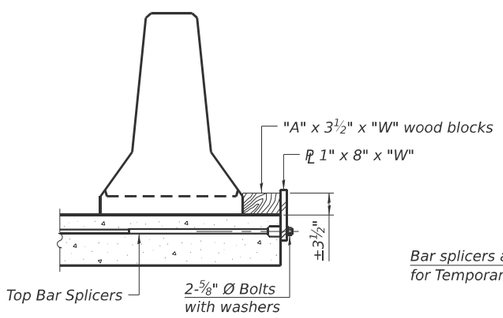

DETAIL I

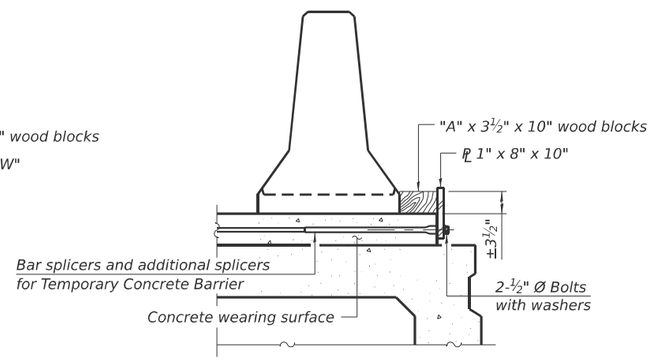

DETAIL II

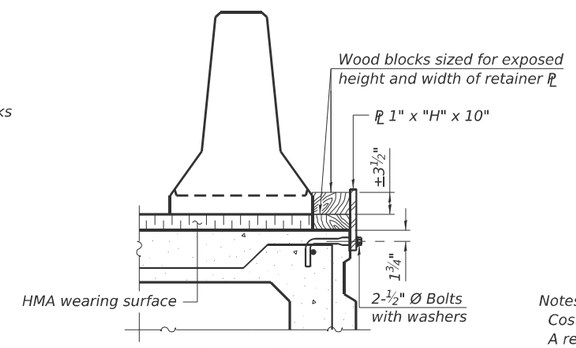

DETAIL III

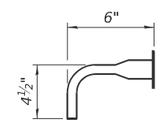

BAR SPLICER FOR #4 BAR - DETAIL III

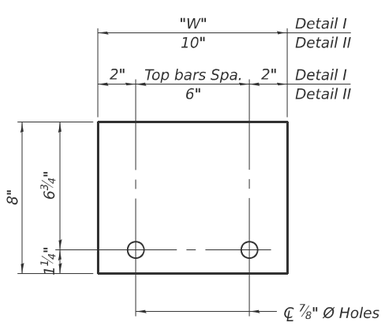

STEEL RETAINER PL 1" x 8" x "W"

(Detail I and II)

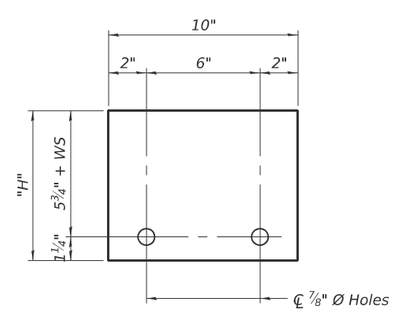

STEEL RETAINER PL 1" x "H" x 10"

(Detail III)

Notes:

Cost of retainer assembly is included with Temporary Concrete Barrier.

A retainer assembly shall be located at the approximate ℄ of each temporary concrete barrier.

The retainer plate shall not be removed until the concrete on the adjacent stage is ready to be poured. For Detail III applications the retainer plate shall not be removed until just prior to placing the adjacent beam.

When the 'A' dimension is less than 1½", the wood block shall be omitted and the barrier shall be placed in direct contact with the steel retainer plate. For deck beam applications the minimum required 'A' distance is 6" to accommodate the shear key clamping device.

Detail I - Installation for a new bridge deck or bridge slab.

Detail II - Installation for a new deck beam with an initial concrete wearing surface. Additional bar splicers shall be provided at 6'-0" centers and paired with the bar splicers of the concrete wearing surface reinforcement to accommodate the installation of the retainer assemblies. The cost of the additional bar splicers is included with the concrete wearing surface.

Detail III - Installation for a new deck beam with no initial wearing surface or with an initial hot-mix asphalt (HMA) wearing surface present. The deck beam directly beneath the temporary concrete barrier shall be fabricated with bar splicer inserts in the side of the beam, as detailed, to accommodate the installation of the retainer assemblies. A pair of bar splicers, 6" apart, shall be placed at 6'-0" centers along the length of the beam. The cost of the bar splicers is included with the deck beam.

RAILING CRITERIA

NCHRP 350 Test Level	3
Railing Weight (plf)	440

R-27

5-15-2023

MODEL: Temporary Concrete Barrier
FILE NAME: pw://jacobs-us-vis-pw.bentley.com:jacobs-us-vis-pw-04/Documents/D3152206.02 - ILDOT - I-55 I-70 Rehabilitation\30 Project Data\PID\ST/Collins\Sht\060-0010 & 060-0011\D876E45-sht-060001 0&060001 1-004-Temp Conc Barrier

11/25/2025 9:21:21 AM

COLLINS ENGINEERS INC.

USER NAME = kzalewski	DESIGNED - CRM	REVISED -	
	CHECKED - EKM	REVISED -	
PLOT SCALE = $SCALE$	DRAWN - DR	REVISED -	
PLOT DATE = 11/25/2025	CHECKED - 2025/10/03	REVISED -	

STATE OF ILLINOIS
DEPARTMENT OF TRANSPORTATION

TEMPORARY CONCRETE BARRIER
STRUCTURE NO. 060–0010 & 060–0011

SHEET S-4 OF S-20 SHEETS

F.A.I. RTE.	SECTION	COUNTY	TOTAL SHEETS	SHEET NO.
70	82-(5,6)RS-2, 60-6RS-2	MADISON & ST. CLAIR	678	491

CONTRACT NO. 76E84

ILLINOIS | FED. AID PROJECT

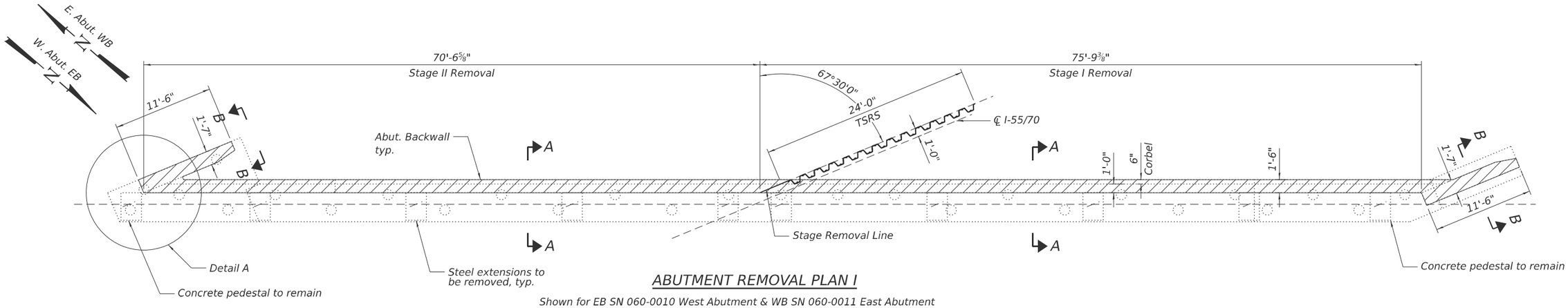

ABUTMENT REMOVAL PLAN I

Shown for EB SN 060-0010 West Abutment & WB SN 060-0011 East Abutment

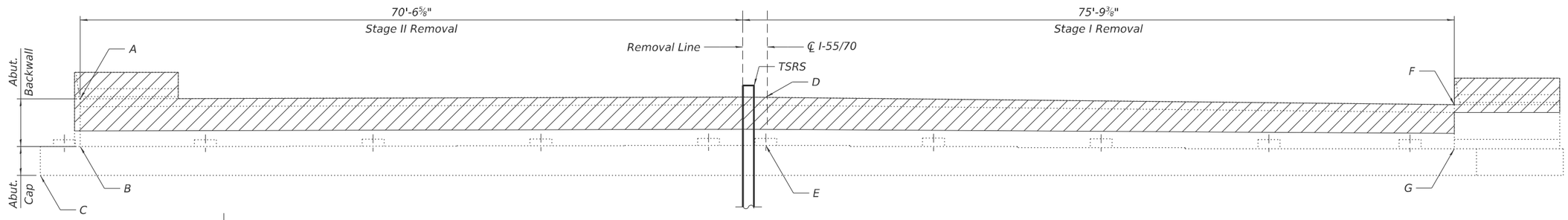

ABUTMENT REMOVAL ELEVATION I

Shown for EB SN 060-0010 West Abutment & WB SN 060-0011 East Abutment

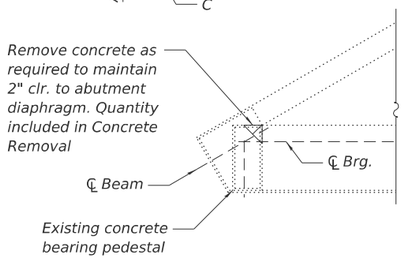

DETAIL A

LEGEND

- Concrete Removal
- Temporary Soil Retention System

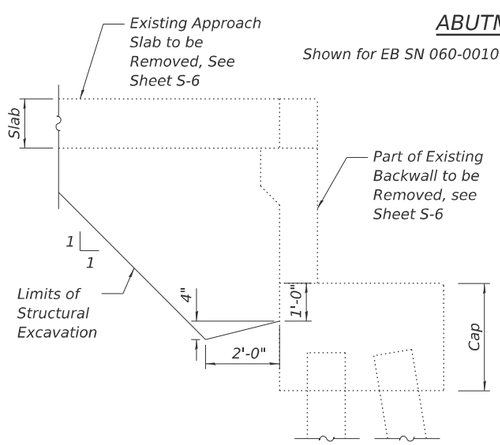

SECTION A-A

Showing Structural Excavation
Horizontal dimensions at Rt. ∠'s

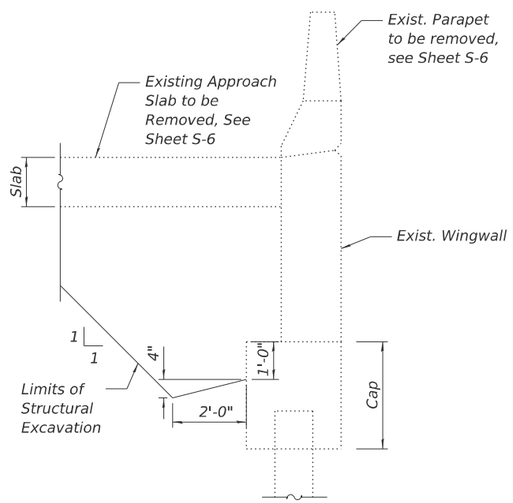

SECTION B-B

Showing Structural Excavation
Horizontal dimensions at Rt. ∠'s

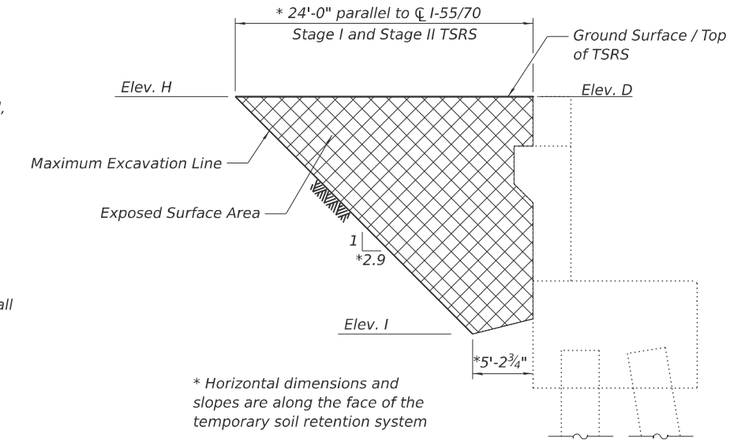

* Horizontal dimensions and slopes are along the face of the temporary soil retention system

TSRS ELEVATION

Location	Elev. A	Elev. B	Elev. C	Elev. D	Elev. E	Elev. F	Elev. G	Elev. H	Elev. I
060-0010 - West Abutment	422.95	417.90	415.07	423.33	418.31	422.68	417.90	423.33	416.90
060-0010 - East Abutment	422.96	417.90	415.07	423.35	418.31	422.70	417.90	423.35	416.90
060-0011 - West Abutment	422.52	417.44	414.36	422.71	417.72	421.89	417.19	422.71	416.19
060-0011 - East Abutment	422.90	417.91	415.08	423.47	418.44	422.99	418.16	423.47	416.91

Elevations are based on existing plans and are provided as a reference point. Actual elevations and dimensions in the field may vary.

Notes:

1. See Sheets S-6 and Sheet S-13 for Temporary Retention System and Structural Excavation quantities..
2. See Sheet S-6 and Sheet S-10 for sections A-A and B-B showing Concret Removal.
3. A cantilevered sheet piling design does not appear feasible and additional members or other retention systems may be necessary. The Contractor shall submit a temporary soil retention system design including plan details and calculations for review and acceptance by the Engineer. The TSRS shall be designed by the licensed Structural Engineer.

MODEL: Typical Substructure Removal Details
FILE NAME: pw://jacobs-uts-va-pw.bentley.com:jacobs-uts-va-pw-04/Documents/D315220602 - ILDOT - I-55 I-70 Rehabilitation/30 Project Data/PID/DST/Collins/Sht/060-0010 & 060-0011/D876E45-sht-060001060060011-005-Substructure Removal I

COLLINS ENGINEERS INC.

USER NAME = kzalewski	DESIGNED - CRM	REVISED -	
	CHECKED - EKM	REVISED -	
PLOT SCALE = $SCALE$	DRAWN - DR	REVISED -	
PLOT DATE = 11/25/2025	CHECKED - 2025/10/03	REVISED -	

STATE OF ILLINOIS
DEPARTMENT OF TRANSPORTATION

TEMPORARY SOIL RETENSION SYSTEM AND REMOVAL DETAILS I
STRUCTURE NO. 060–0010 & 060–0011

SHEET S-5 OF S-20 SHEETS

F.A.I. RTE.	SECTION	COUNTY	TOTAL SHEETS	SHEET NO.
70	82-(5,6)RS-2, 60-6RS-2	MADISON & ST. CLAIR	678	492

CONTRACT NO. 76E84

ILLINOIS FED. AID PROJECT

11/25/2025 9:21:34 AM

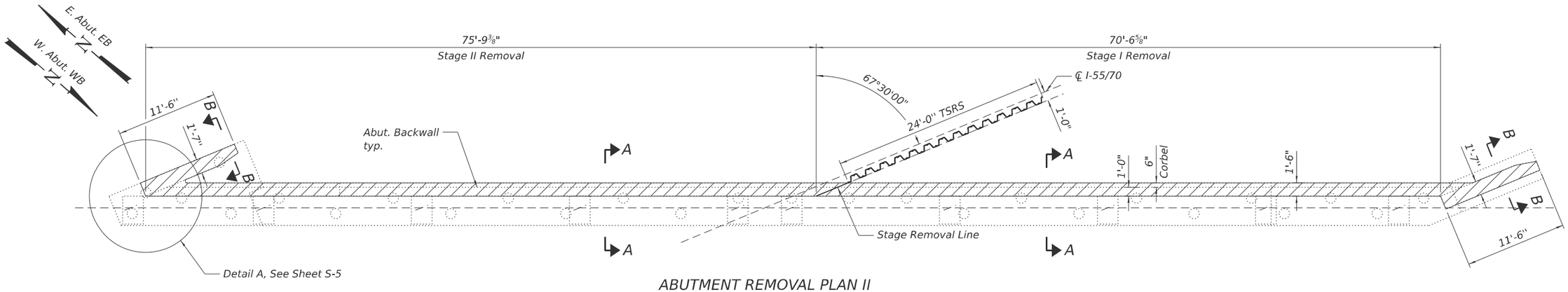

ABUTMENT REMOVAL PLAN II

Shown for EB SN 060-0010 East Abutment & WB SN 060-0011 West Abutment

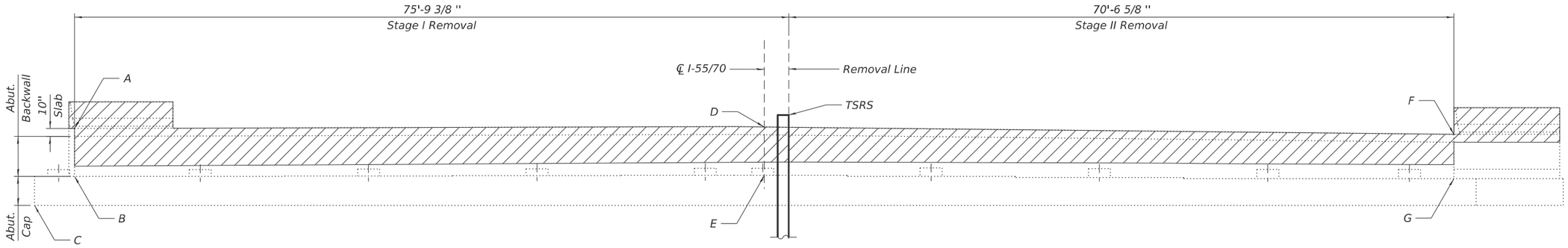

ABUTMENT REMOVAL ELEVATION II

Shown for EB SN 060-0010 East Abutment & WB SN 060-0011 West Abutment

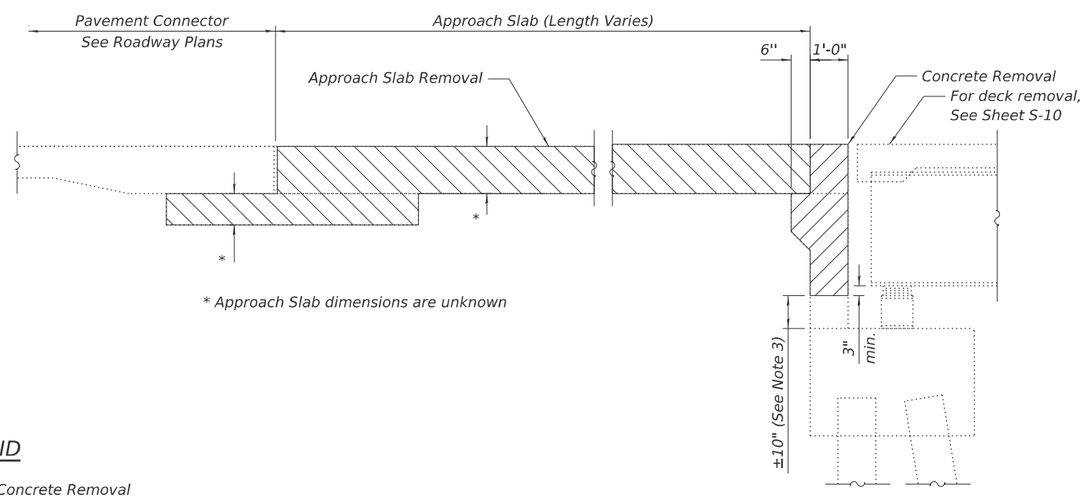

* Approach Slab dimensions are unknown

SECTION A-A
REMOVAL AT ABUTMENT

Horizontal dimensions are at Rt. ∠'s

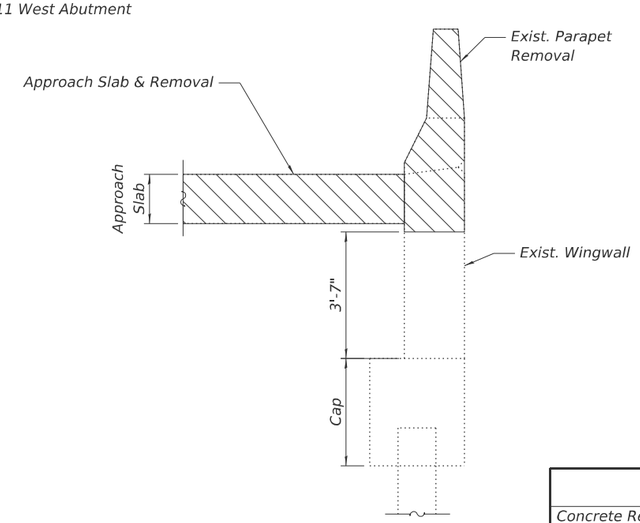

SECTION B-B
REMOVAL AT WINGWALL

Horizontal dimensions are at Rt. ∠'s

Notes:
1. Approach Slab and Approach Slab Footing removal shall be paid for as Approach Slab Removal.
2. See Sheet S-5 for elevation table.
3. Backwall to be cut 3" min. below existing bottom beam flanges. The cut line to be established in the field.

LEGEND

- Concrete Removal
- Approach Slab Removal

BILL OF MATERIAL

ITEM	UNIT	QUANTITY		
		SN 060-0010	SN 060-0011	TOTAL
Concrete Removal	Cu. Yd.	74.6	74.6	149.2
Structure Excavation	Cu. Yd.	339	339	678
Temporary Soil Retention System	Sq. Ft.	187	187	374
Approach Slab Removal	Sq. Ft.	1,327	1,327	2,654

FACE OF N. PARAPET/CURB

Location	Station	Offset	Theoretical Grade Elevations
W. End of West Appr. Pav't	376+04.04	-28.58	422.03
A1	376+4.04	-28.58	422.12
A2	376+25.45	-28.00	422.20
E. End of West Appr. Pav't.	376+35.45	-28.00	422.28
W. End of East Appr. Pav't	379+18.21	-28.00	422.82
A3	379+28.21	-28.00	422.80
A4	379+39.42	-28.58	422.78
E. End of East Appr. Pav't.	379+49.42	-28.58	422.77

N. EDGE OF ROADWAY

Location	Station	Offset	Theoretical Grade Elevations
W. End of West Appr. Pav't	376+29.59	-18.00	422.45
A1	376+39.59	-18.00	422.52
A2	376+49.59	-18.00	422.57
E. End of West Appr. Pav't.	376+59.59	-18.00	422.36
W. End of East Appr. Pav't	379+42.35	-18.00	423.00
A3	379+52.35	-18.00	422.98
A4	379+62.35	-18.00	422.96
E. End of East Appr. Pav't.	379+72.35	-18.00	422.94

℄ I-55/70 EB, CROWN, PGL & STAGE CONSTR. LINE

Location	Station	Offset	Theoretical Grade Elevations
W. End of West Appr. Pav't	376+73.05	0.00	422.94
A1	376+83.05	0.00	422.98
A2	376+93.05	0.00	423.02
E. End of West Appr. Pav't.	377+03.05	0.00	423.05
W. End of East Appr. Pav't	379+85.81	0.00	423.20
A3	379+95.81	0.00	423.17
A4	380+05.81	0.00	423.15
E. End of East Appr. Pav't.	380+15.81	0.00	423.12

S. EDGE OF ROADWAY

Location	Station	Offset	Theoretical Grade Elevations
W. End of West Appr. Pav't	377+16.51	18.00	422.81
A1	377+26.51	18.00	422.84
A2	377.36.51	18.00	422.87
E. End of West Appr. Pav't.	377+46.51	18.00	422.65
W. End of East Appr. Pav't	380+29.27	18.00	422.80
A3	380+39.27	18.00	422.76
A4	380+49.27	18.00	422.73
E. End of East Appr. Pav't.	380+59.27	18.00	422.71

FACE OF S. PARAPET/CURB

Location	Station	Offset	Theoretical Grade Elevations
W. End of West Appr. Pav't	377+42.06	28.58	422.68
A1	377+52.06	28.58	422.70
A2	377+60.65	28.00	422.71
E. End of West Appr. Pav't.	377+70.65	28.00	422.73
W. End of East Appr. Pav't	380+53.41	28.00	422.51
A3	380+63.41	28.00	422.50
A4	380+74.82	28.58	422.49
E. End of East Appr. Pav't.	380+84.82	28.58	422.49

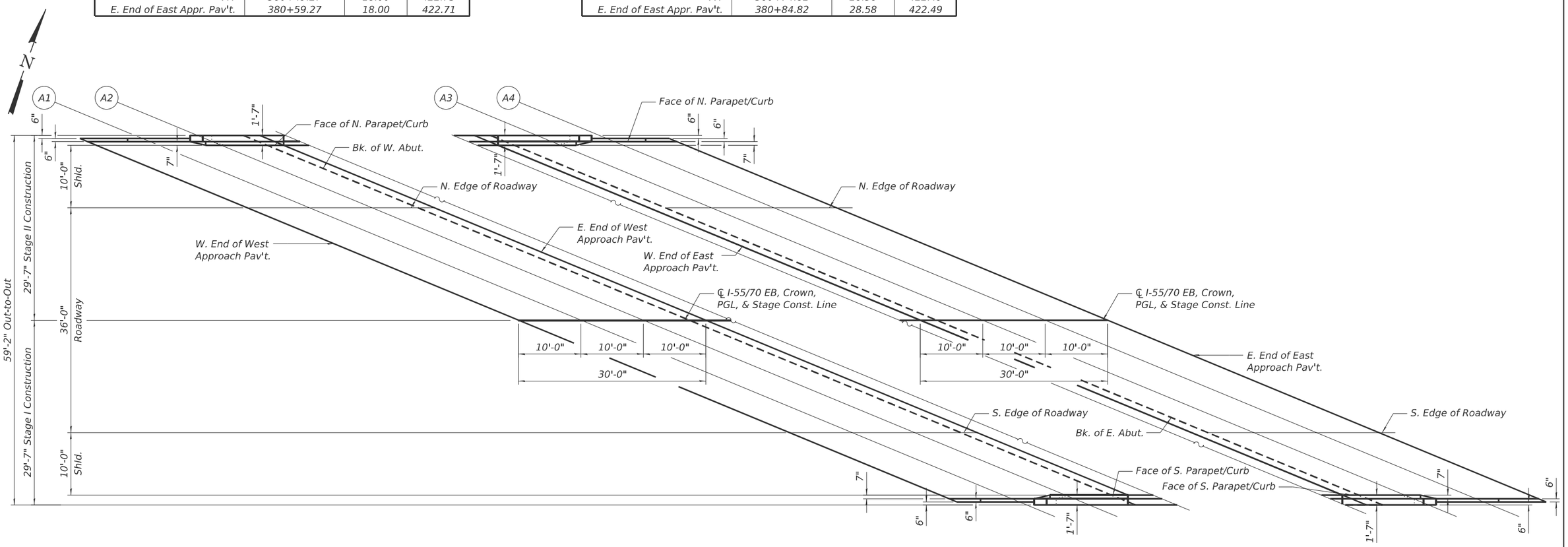

PLAN
SN 060-0010 WEST APPROACH SLAB

PLAN
SN 060-0010 EAST APPROACH SLAB

MODEL: General Notes and Bill of Material
FILE NAME: pw://jacobs-uts-us-pw.bentley.com:jacobs-uts-us-pw-04/Documents/D31552206.02 - ILDOT - I-55 I-70 Rehabilitation\30 Project Data\PID\ST\Collins\Sht\060-0010 & 060-0011\D876E45-sht-060001 0&060001 1-007-Top of Appr Slabs (SN 060-0010)

COLLINS ENGINEERS INC.

USER NAME = kzalewski	DESIGNED - CRM	REVISED -	
	CHECKED - EKM	REVISED -	
PLOT SCALE = $SCALE$	DRAWN - KGZ	REVISED -	
PLOT DATE = 11/25/2025	CHECKED - 2025/10/03	REVISED -	

STATE OF ILLINOIS
DEPARTMENT OF TRANSPORTATION

TOP OF APPROACH SLAB ELEVATIONS (SN 060–0010)
STRUCTURE NO. 060–0010 & 060–0011

SHEET S-7 OF S-20 SHEETS

F.A.I. RTE.	SECTION	COUNTY	TOTAL SHEETS	SHEET NO.
70	82-(5,6)RS-2, 60-6RS-2	MADISON & ST. CLAIR	678	494
		CONTRACT NO. 76E84		
		ILLINOIS	FED. AID PROJECT	

11/25/2025 9:22:03 AM

FACE OF N. PARAPET/CURB

Location	Station	Offset	Theoretical Grade Elevations
W. End of West Appr. Pav't	374+20.56	-28.58	421.28
A1	374+30.56	-28.58	421.39
A2	374+41.97	-28.00	421.51
E. End of West Appr. Pav't.	374+51.97	-28.00	421.61
W. End of East Appr. Pav't	377+34.72	-28.00	422.69
A3	377+44.72	-28.00	422.69
A4	377+53.31	-28.58	422.68
E. End of East Appr. Pav't.	377+63.31	-28.58	422.68

N. EDGE OF ROADWAY

Location	Station	Offset	Theoretical Grade Elevations
W. End of West Appr. Pav't	374+46.11	-18.00	421.78
A1	374+56.11	-18.00	421.86
A2	374+66.11	-18.00	421.93
E. End of West Appr. Pav't.	374+76.11	-18.00	421.76
W. End of East Appr. Pav't	377+58.86	-18.00	722.90
A3	377+68.86	-18.00	422.90
A4	377+78.86	-18.00	422.90
E. End of East Appr. Pav't.	377+88.86	-18.00	422.89

℄ I-55/70 WB, CROWN, PGL, & STAGE CONSTR. LINE

Location	Station	Offset	Theoretical Grade Elevations
W. End of West Appr. Pav't	374+89.57	0.00	422.37
A1	374+99.57	0.00	422.43
A2	375+09.57	0.00	422.49
E. End of West Appr. Pav't.	375+19.57	0.00	422.54
W. End of East Appr. Pav't	378+02.32	0.00	423.16
A3	378+12.32	0.00	423.14
A4	378+22.32	0.00	423.13
E. End of East Appr. Pav't.	378+32.32	0.00	423.11

S. EDGE OF ROADWAY

Location	Station	Offset	Theoretical Grade Elevations
W. End of West Appr. Pav't	375+33.03	18.00	422.33
A1	375+43.03	18.00	422.39
A2	375+53.03	18.00	422.43
E. End of West Appr. Pav't.	375+63.03	18.00	422.24
W. End of East Appr. Pav't	378+45.78	18.00	422.80
A3	378+55.78	18.00	422.78
A4	378+65.78	18.00	422.75
E. End of East Appr. Pav't.	378+75.78	18.00	422.74

FACE OF S. PARAPET/CURB

Location	Station	Offset	Theoretical Grade Elevations
W. End of West Appr. Pav't	375+58.58	28.58	422.25
A1	375+68.18	28.58	422.29
A2	375+77.17	28.00	422.32
E. End of West Appr. Pav't.	375+87.17	28.00	422.36
W. End of East Appr. Pav't	378+69.92	28.00	422.53
A3	378+79.92	28.00	422.53
A4	378+91.33	28.58	422.53
E. End of East Appr. Pav't.	378+01.33	28.58	422.53

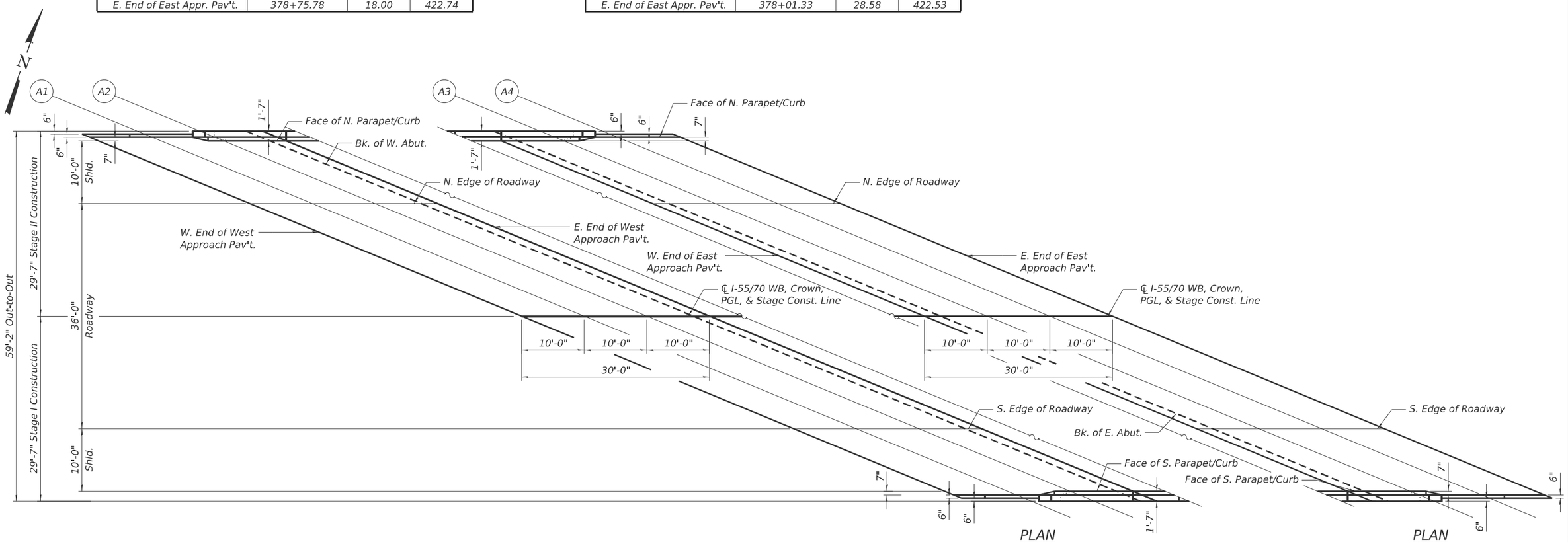

PLAN
SN 060-0011 WEST APPROACH SLAB

PLAN
SN 060-0011 EAST APPROACH SLAB

MODEL: General Notes and Bill of Material
FILE NAME: pw://jacobs-uks-vis-pw.bentley.com:jacobs-uks-vis-pw-04/Documents/D3152206.02 - ILDOT - I-55 I-70 Rehabilitation/30 Project Data/PID/STC/Collins Shit/060-0010 & 060-0011/D876E45-sht-06000010&0600011-008-Top of Appr Slabs (SN 060-0011)
11/25/2025 9:22:16 AM

COLLINS ENGINEERS INC.

USER NAME = kzalewski	DESIGNED - CRM	REVISED -	
	CHECKED - EKM	REVISED -	
PLOT SCALE = $SCALE$	DRAWN - KGZ	REVISED -	
PLOT DATE = 11/25/2025	CHECKED - 2025/10/03	REVISED -	

STATE OF ILLINOIS
DEPARTMENT OF TRANSPORTATION

TOP OF APPROACH SLAB ELEVATIONS (SN 060-0011)
STRUCTURE NO. 060-0010 & 060-0011

SHEET S-8 OF S-20 SHEETS

F.A.I. RTE.	SECTION	COUNTY	TOTAL SHEETS	SHEET NO.
70	82-(5,6)RS-2, 60-6RS-2	MADISON & ST. CLAIR	678	495

CONTRACT NO. 76E84

ILLINOIS FED. AID PROJECT

BILL OF MATERIAL

ITEM	UNIT	QUANTITY		
		SN 060-0010	SN 060-0011	TOTAL
Concrete Removal	Cu. Yd.	42.4	42.4	84.8
Concrete Superstructure	Cu. Yd.	177.4	177.4	354.8
Bridge Deck Grooving	Sq. Yd.	1,759	1,759	3,518
Protective Coat	Sq. Yd.	1,794	1,794	3,588
Concrete Sealer	Sq. Ft.	878	878	1,756
Bridge Deck Latex Concrete Overlay, 3 inches	Sq. Yd.	1,604	1,604	3,208
Bridge Deck Scarification, 1"	Sq. Yd.	1,588	1,588	3,176
Deck Slab Repair (Full Depth, Type II)	Sq. Yd.	30	30	60

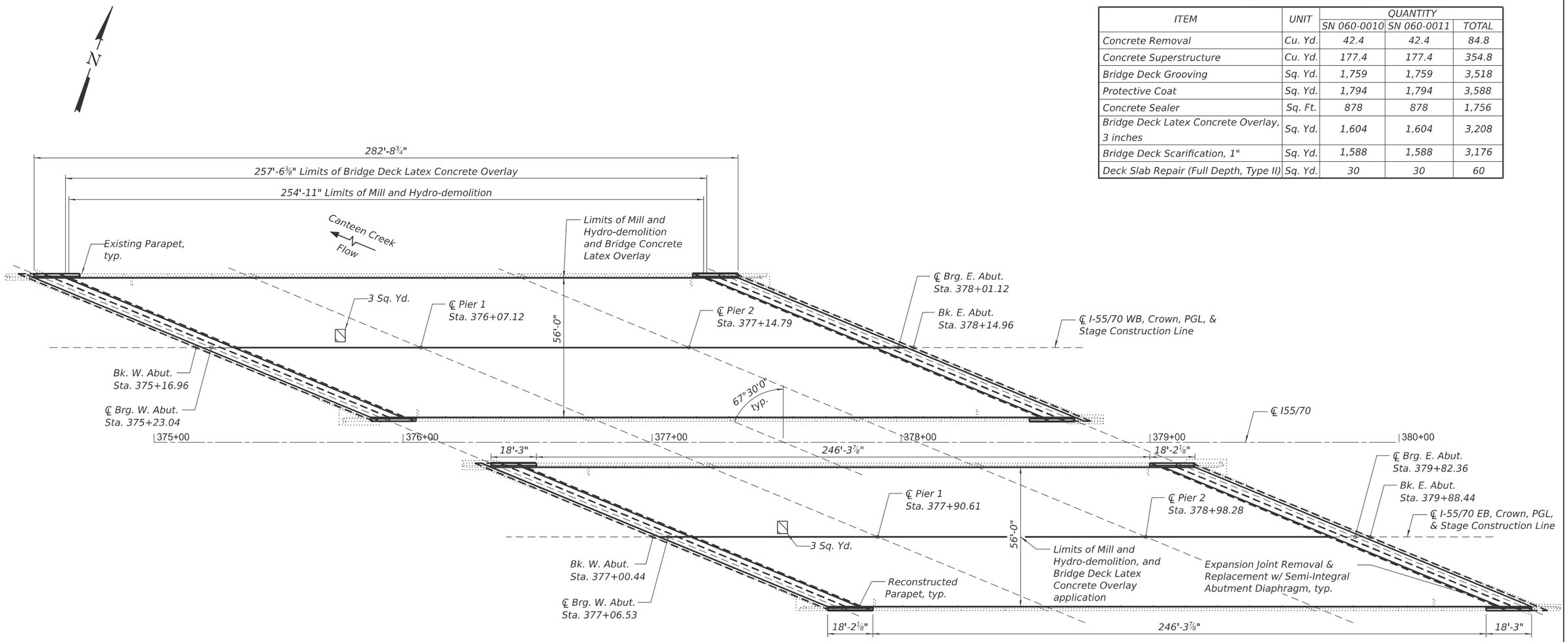

PLAN

LEGEND:

Deck Slab Repair (Full Depth)

Sq. Yd. Square Yard

Notes:

1. The Resident Engineer will determine the final patch locations and quantities in the field after milling and hydrodemolition of the deck, before bridge deck patching operations begin. The Resident Engineer shall show actual size and locations of the deck repairs on the As-built plans.
2. The Full Depth Repairs shown on the plan are based on the visual bottom survey. The additional 27 Sq. Yd. of Deck Slab Repair (Full Depth) is an allowance for field identified repairs.
3. For deck removal and construction details, see Sheet S-10.

MODEL: Existing Deck Repair Plan and Details
FILE NAME: pw://jacobs-us-vo-pw.bentley.com:jacobs-us-vo-pw-04/Documents/D3152206.02 - ILDOT - I-55 I-70 Rehabilitation/30 Project Data/PID/ST/Collins/Sht/060-0010 & 060-0011/D876E45-sht-060001060000011-009-Deck Repair Plan

11/25/2025 9:22:43 AM

COLLINS ENGINEERS INC.

USER NAME = kzalewski	DESIGNED - CRM	REVISED -	
	CHECKED - EKM	REVISED -	
PLOT SCALE = $SCALE$	DRAWN - DR	REVISED -	
PLOT DATE = 11/25/2025	CHECKED - 2025/10/03	REVISED -	

STATE OF ILLINOIS
DEPARTMENT OF TRANSPORTATION

DECK REPAIR PLAN AND DETAILS
STRUCTURE NO. 060–0010 & 060–0011

SHEET S-9 OF S-20 SHEETS

F.A.I. RTE.	SECTION	COUNTY	TOTAL SHEETS	SHEET NO.
70	82-(5,6)RS-2, 60-6RS-2	MADISON & ST. CLAIR	678	496
		CONTRACT NO. 76E84		
		ILLINOIS	FED. AID PROJECT	

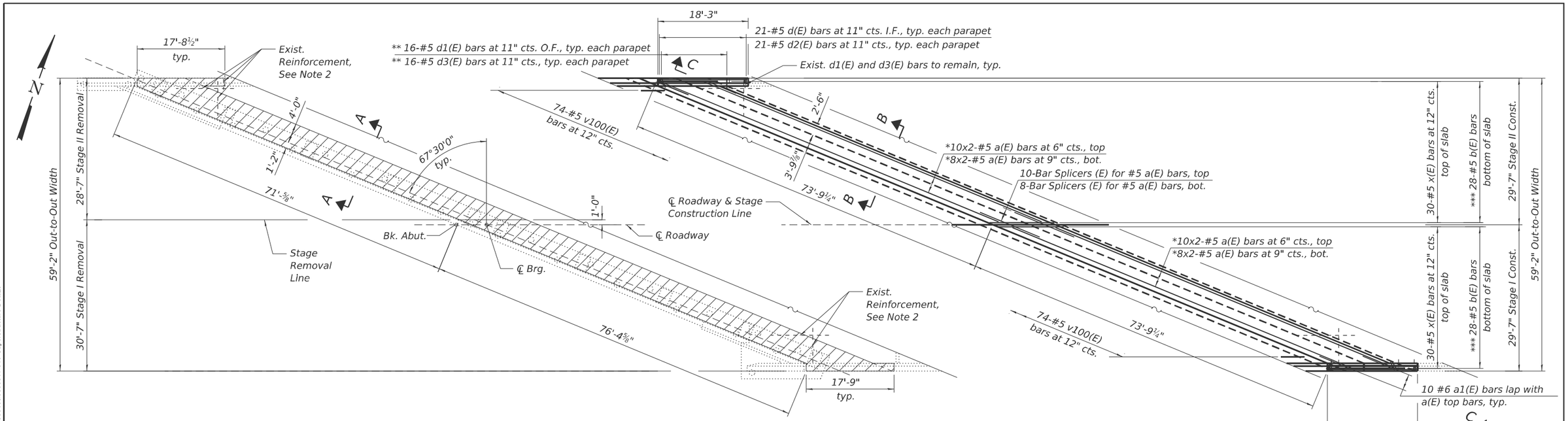

PARTIAL DECK REMOVAL PLAN

SN 060-0010 at West Abutment shown,
other locations similar

PARTIAL DECK REPLACEMENT PLAN

SN 060-0011 at West Abutment shown,
other locations similar

LEGEND

Concrete Removal

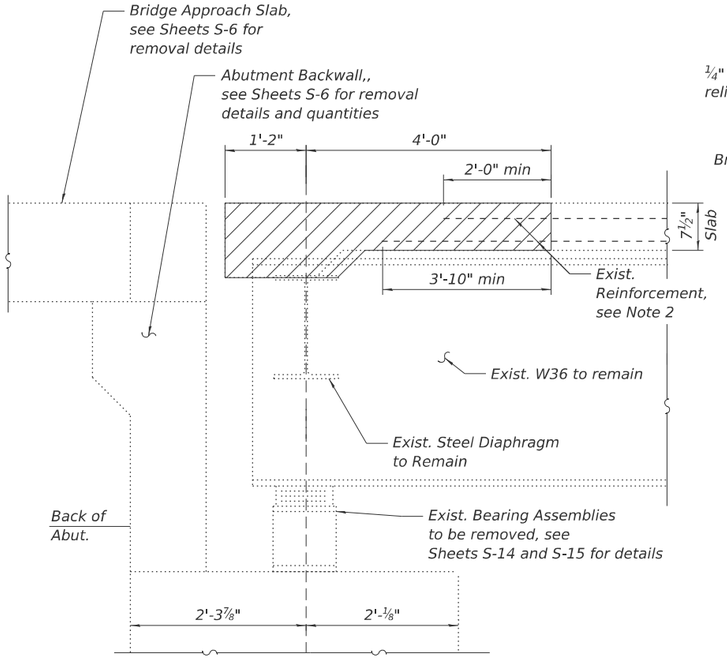

SECTION A-A

Removal
(at Rt. ∠'s to joint)

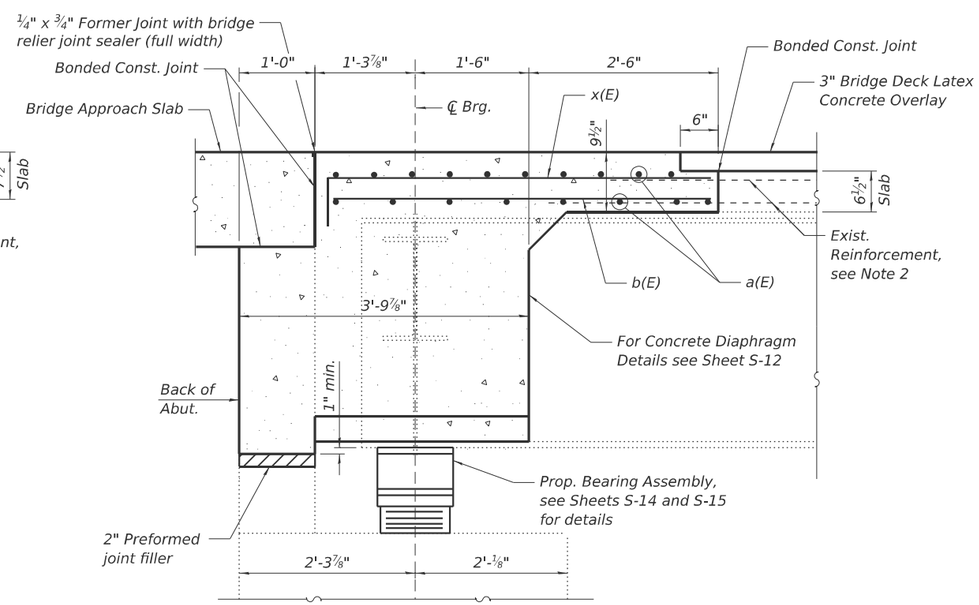

SECTION B-B

Proposed
(at Rt. ∠'s to joint)

* Trim to fit bars as necessary
** Flare bars as needed at ends
*** Spaced as shown in cross-section on Sheet S-9

MINIMUM BAR LAP:

#5 bar = 2'-0"

Notes:

1. Bars indicated thus 10x2-#5 etc. indicates 10 lines of bars with 2 lengths per line.

2. Existing parapet reinforcement, longitudinal and transverse deck reinforcement extending into the removal area shall be cleaned, straightened, and incorporated into the new construction. Any reinforcement bars to remain which are damaged during concrete removal shall be replaced with an approved bar splicer or anchorage system. Cost included with Concrete Removal.

3. For v100(E) bars, see Sheets S-11 and S-12.

4. For Section C-C, see Sheet S-11.

5. See Sheet S-9 for Concrete Removal quantity.

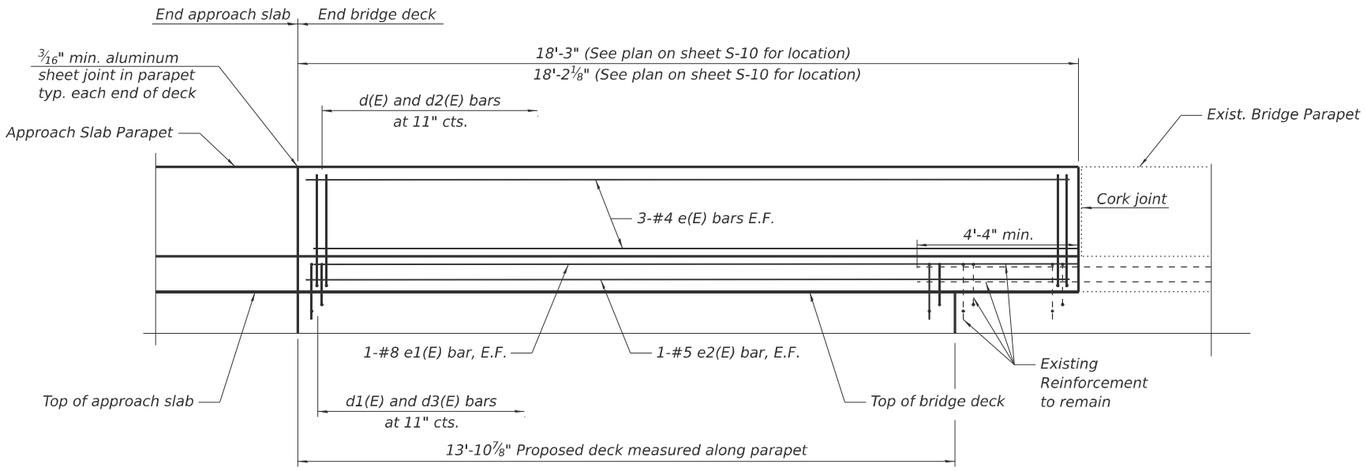

INSIDE ELEVATION OF PARAPET

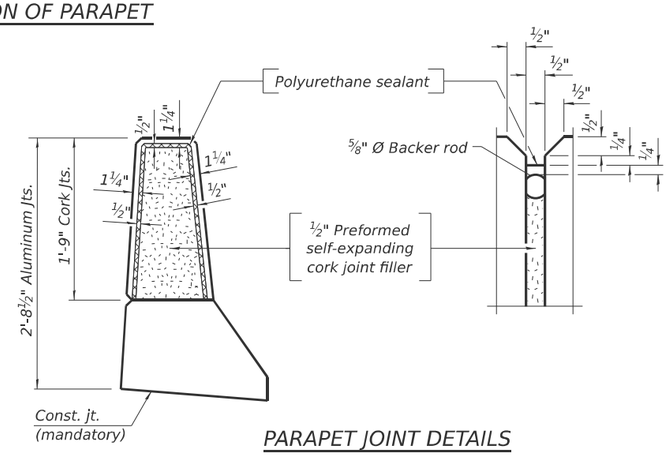

PARAPET JOINT DETAILS

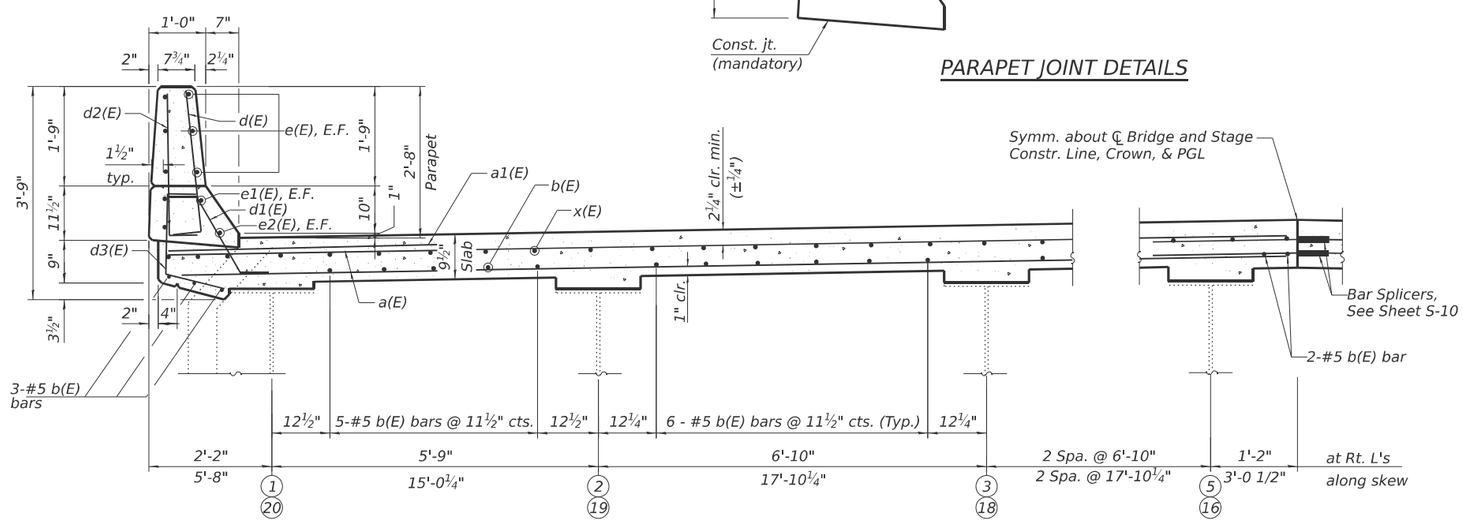

SECTION C-C

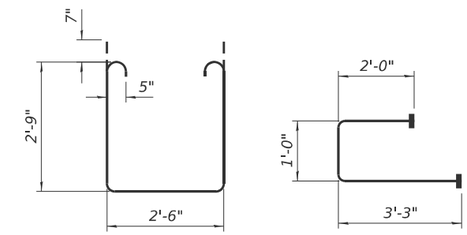

BAR s1(E)

BAR s(E)
(HEADED)
616 - #5 terminators

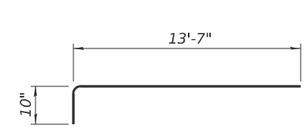

BAR x(E)

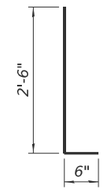

BAR d(E) & d2(E)

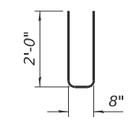

BAR u(E)

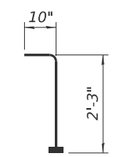

BAR v100(E)
(HEADED ONE END)
296 - #5 terminators

BILL OF MATERIAL

Bar	No.	Size	Length	Shape
a(E)	144	#5	39'-6"	
a1(E)	40	#6	15'-8"	
b(E)	112	#5	13'-7"	
d(E)	84	#5	3'-0"	
d1(E)	64	#5	2'-7"	
d2(E)	84	#4	3'-0"	
d3(E)	64	#4	3'-1"	
e(E)	24	#4	17'-11"	
e1(E)	8	#8	17'-11"	
e2(E)	8	#5	17'-11"	
m(E)	40	#6	38'-4"	
m1(E)	8	#6	4'-0"	
m2(E)	8	#6	14'-8"	
m3(E)	24	#6	17'-6"	
m4(E)	8	#6	2'-11"	
m5(E)	8	#6	5'-4"	
m6(E)	8	#6	14'-8"	
m7(E)	24	#6	17'-6"	
m8(E)	8	#6	2'-11"	
m9(E)	16	#4	37'-7"	
s(E)	308	#5	6'-3"	
s1(E)	308	#5	9'-2"	
u(E)	308	#4	4'-8"	
v100(E)	296	#5	3'-1"	
x(E)	128	#5	14'-5"	

Item	Unit	Total
Reinforcement Bars, Epoxy Coated	Pound	23,190
Bar Terminators	Each	1,000

Note: Quantities shown for one structure.
Other bridge similar

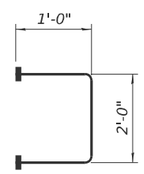

BAR m1(E)
(HEADED)
16 - #6 terminators

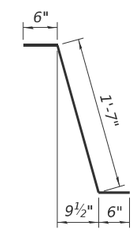

BAR d1(E)

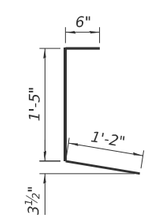

BAR d3(E)

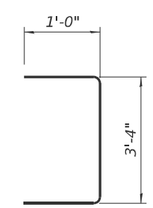

BAR m5(E)

Notes:

1. Headed bars shall conform to ASTM A970 with threaded attachment; Class HA; and reinforcement bars conforming to ASTM A706. Bar terminators paid for separately.
2. The b(E) and x(E) bars shall be placed parallel to beams and spaced at right angles to beams.
3. The 3/16" min. aluminum sheet shall be ASTM B 209 alloy 3003-H14 and coated with 5 mils of either bitumen paint or epoxy paint to minimize reaction with wet concrete. Cost included with Concrete Superstructure.
4. The polyurethane sealant shall be according to Article 1050.04 of the Std. Spec. and the color shall be grey.

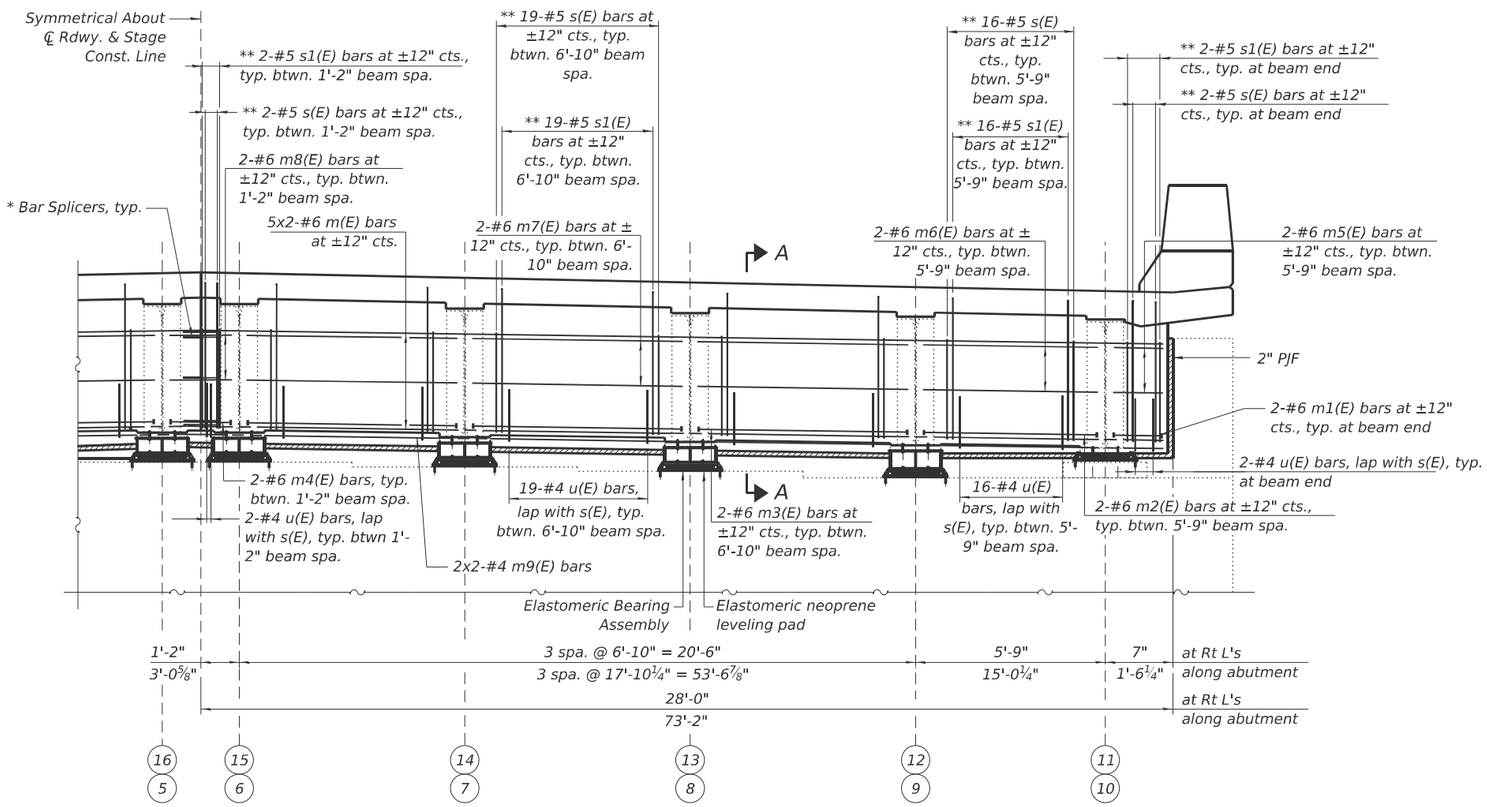

DIAPHRAGM AT ABUTMENT

(EB SN 060-0010 West Abutment shown, East Abutment similar)
(WB SN 060-0011 East Abutment shown, West Abutment similar)

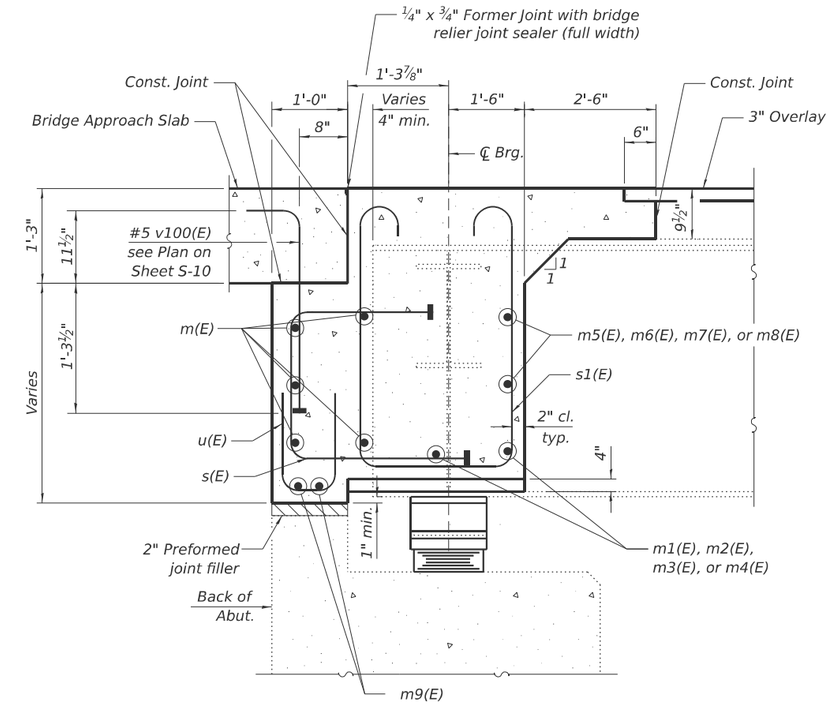

SECTION A-A

(at Rt. ∠'s)

MINIMUM BAR LAP:

#4 bar = 2'-4"
#6 bar = 3'-9"

* Bar Splicers:
5 Standard Bar Splicers (E) for #6 m(E) bars
2 Standard Bar Splicers (E) for #4 m9(E) bars

2 Standard Mechnical Splicers (E) for #6 m4(E) bars
2 Standard Mechnical Splicers (E) for #6 m8(E) bars

** Flare bars as needed adjacent to beams.
s1(E) bars shall alternate aligning with front and back longitudinal bars.

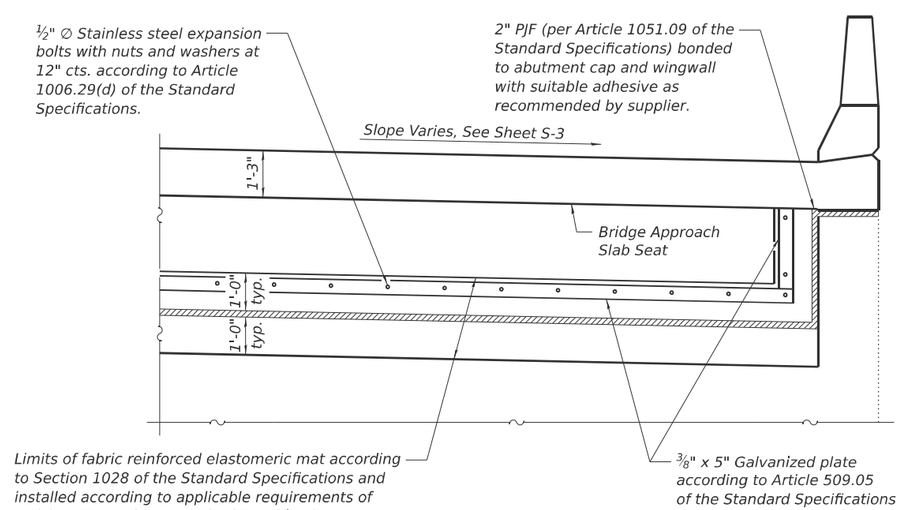

ELEVATION

(Looking at back of abutment)

Notes:

1. See Sheet S-11 for Bill of Material and bar diagrams.
2. The s(E), s1(E), u(E) bars shall be placed parallel to the beams. Spacing for these bars shall be at right angles to the beams.
3. Bars indicated thus 10x2-#5 etc. indicated 10 lines of bars with 2 lengths per line.
4. Cost of fabric reinforced elastomeric mat, galvanized plate, stainless steel expansion bolts with nuts and washers and installation are included in the cost of Concrete Superstructure.

MODEL: Abutment Diaphragm Details I
FILE NAME: pw://jacobs-us-prod-pw.bentley.com:jacobs-us-pw-04/Documents/D3152206.02 - ILDOT - I-55 I-70 Rehabilitation/30 Project Data/PID/ST/Collins/Sht/060-0010 & 060-0011/D876E45-sht-060001060000011-012-Concrete Diaphragm

COLLINS ENGINEERS INC.

USER NAME = kzalewski	DESIGNED - CRM	REVISED -	STATE OF ILLINOIS DEPARTMENT OF TRANSPORTATION	CONCRETE DIAPHRAGM STRUCTURE NO. 060–0010 & 060–0011	
	CHECKED - EKM	REVISED -			
PLOT SCALE = $SCALE$	DRAWN - DR	REVISED -			
PLOT DATE = 11/25/2025	CHECKED - 2025/10/03	REVISED -		SHEET S-12 OF S-20 SHEETS	

F.A.I. RTE.	SECTION	COUNTY	TOTAL SHEETS	SHEET NO.
70	82-(5,6)RS-2, 60-6RS-2	MADISON & ST. CLAIR	678	499
		CONTRACT NO. 76E84		
		ILLINOIS	FED. AID PROJECT	

11/25/2025 9:44:50 AM

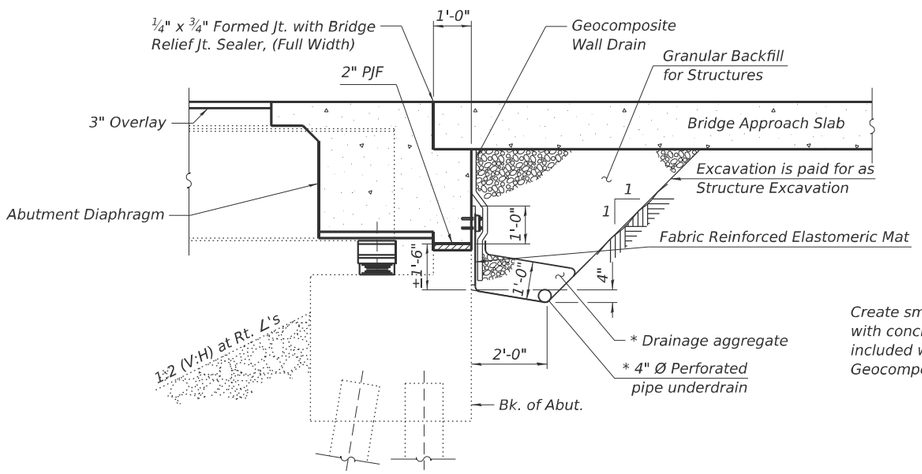

SECTION THRU SEMI-INTEGRAL ABUTMENT

(Horiz. dim. at Rt. ∠'s to the joint)

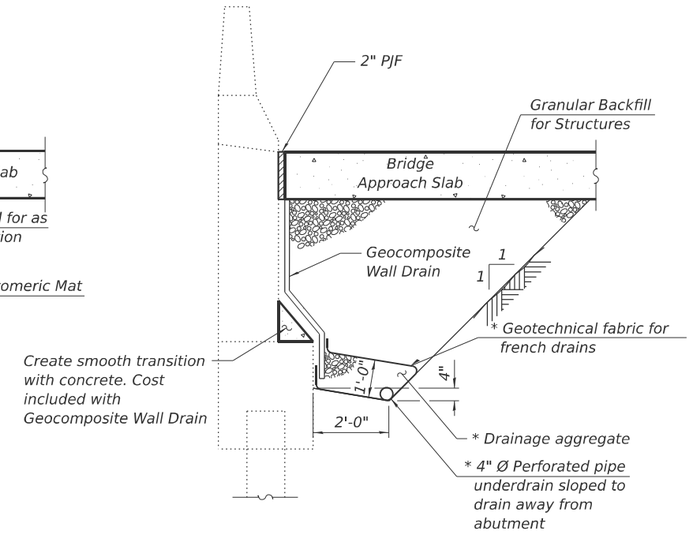

SECTION THRU ABUTMENT WINGWALL

(Horiz. dim. at Rt. ∠'s to the joint)

*Included in the cost of Pipe Underdrain for Structures.

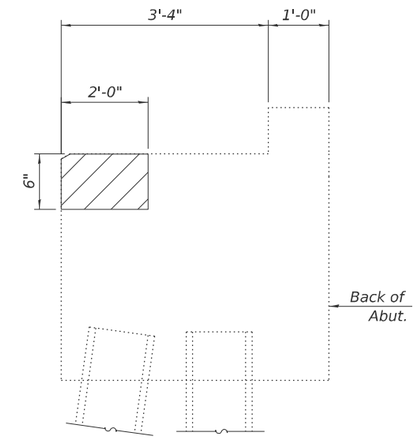

SECTION A-A

(Showing Structural Repair of Concrete)
Dimensions to be verified in field

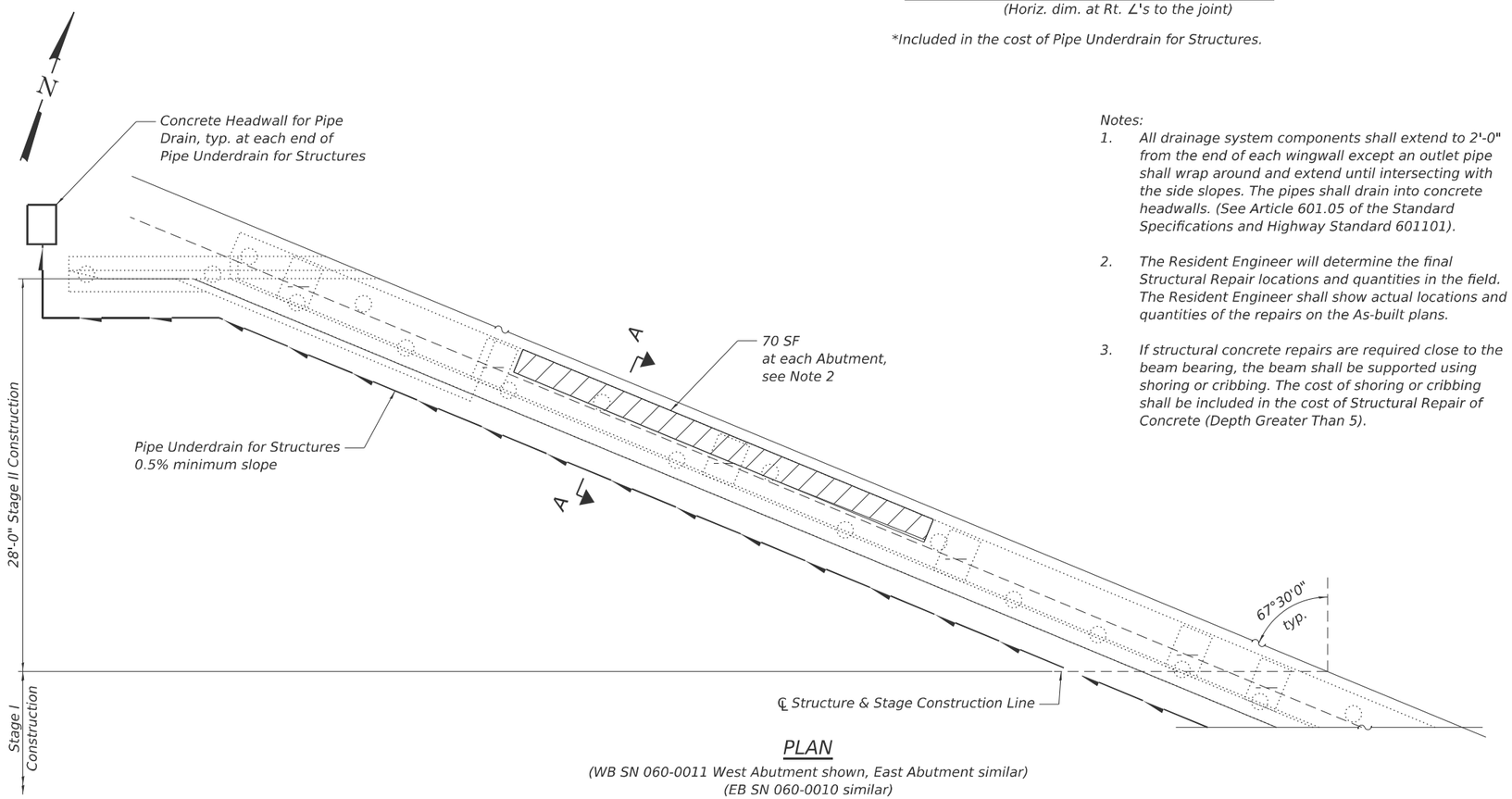

PLAN

(WB SN 060-0011 West Abutment shown, East Abutment similar)
(EB SN 060-0010 similar)

Notes:

1. All drainage system components shall extend to 2'-0" from the end of each wingwall except an outlet pipe shall wrap around and extend until intersecting with the side slopes. The pipes shall drain into concrete headwalls. (See Article 601.05 of the Standard Specifications and Highway Standard 601101).

2. The Resident Engineer will determine the final Structural Repair locations and quantities in the field. The Resident Engineer shall show actual locations and quantities of the repairs on the As-built plans.

3. If structural concrete repairs are required close to the beam bearing, the beam shall be supported using shoring or cribbing. The cost of shoring or cribbing shall be included in the cost of Structural Repair of Concrete (Depth Greater Than 5).

LEGEND

Structural Repair of Concrete

BILL OF MATERIAL

ITEM	UNIT	QUANTITY		
		SN 060-0010	SN 060-0010	TOTAL
Granular Backfill for Structures	Cu. Yd.	339	339	678
Geocomposite Wall Drain	Sq. Yd.	247	247	494
Concrete Headwalls for Pipe Drains	Each	4	4	8
Pipe Underdrain for Structures 4"	Foot	340	340	680
Structural Repair of Concrete (Depth Greater Than 5")	Sq. Ft.	140	140	280

MODEL: Abutment Drainage Details
FILE NAME: pw://jacobs-ds-vb-pw.bentley.com:jacobs-ds-vb-pw-04/Documents/D3152206.02 - ILDOT - I-55 I-70 Rehabilitation\30 Project Data\PID\ST\Collins\Sht\060-0010 & 060-0011\D876E45-sht-060001060600011-013-Abutment Details
11/25/2025 9:23:54 AM

COLLINS ENGINEERS INC.

USER NAME = kzalewski	DESIGNED - CRM	REVISED -	
	CHECKED - EKM	REVISED -	
PLOT SCALE = $SCALE$	DRAWN - DR	REVISED -	
PLOT DATE = 11/25/2025	CHECKED - 2025/10/03	REVISED -	

STATE OF ILLINOIS
DEPARTMENT OF TRANSPORTATION

ABUTMENT DETAILS
STRUCTURE NO. 060–0010 & 060–0011

SHEET S-13 OF S-20 SHEETS

F.A.I. RTE.	SECTION	COUNTY	TOTAL SHEETS	SHEET NO.
70	82-(5,6)RS-2, 60-6RS-2	MADISON & ST. CLAIR	678	500

CONTRACT NO. 76E84

ILLINOIS FED. AID PROJECT