STA. A 339+53.74 FAI-55 70
EXISTING GUIDE SIGN ON STRUCTURAL STEEL SIGN SUPPORT
PROPOSED GUIDE SIGN ON STRUCTURAL STEEL SIGN SUPPORT AT STA. A 339+53.74 OFFSET 100 FT

STRUCTURAL STEEL SIGN SUPPORT - BREAKAWAY							CONCRETE FOUNDATIONS	SIGN PANEL - TYPE 3	SIGN PANEL REMOVAL - TYPE 3
SIZE	NEAR POST		FAR POST		STUB POST (FT)	WEIGHT (POUND)			
	OFFSET (FT)	LENGTH (FT)	OFFSET (FT)	LENGTH (FT)			CU YD	SF	SF
W12X26	94.45	21.58	103.66	21.42	6	1274	2.54	112	112

PHOTO COURTESY OF GOOGLE MAPS

SIGN DETAIL
1:60

WIDTH x HGHT.	14'–0" x 8'–0"	
BORDER WIDTH	2"	
CORNER RADIUS	12"	
MOUNTING	Overhead	
BACKGROUND	TYPE:	Reflective – ZZ
	COLOR:	Green
LEGEND/BORDER	TYPE:	Reflective – ZZ
	COLOR:	White

SYMBOL	ROT	X	Y	WID	HT

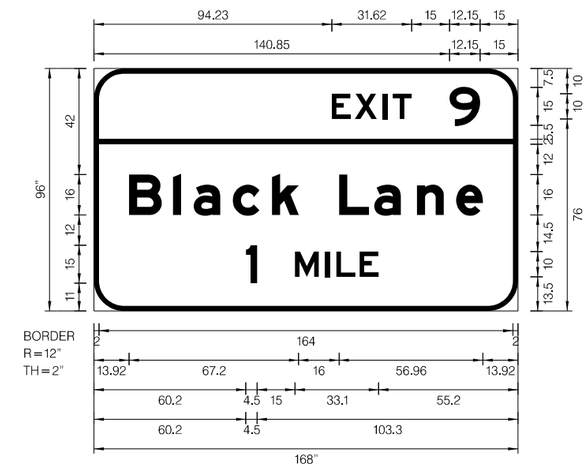

Dimensions are in inches.tenths

Letter locations are panel edge to lower left corner

LETTER POSITIONS (X)																		LENGTH	SERIES/SIZE
E	X	I	T	9															E 2000
94.2	103.4	114.5	118.4	140.9														31.6,12.2	10,15
B	l	a	c	k	L	a	n	e											EM 2000
13.9	31.4	39.5	55	70.6	97.1	111	128	143.5										140.2	16/12
1	M	I	L	E															E 2000
60.2	79.7	91.7	96.1	105.3														52.6	15,10

MODEL: $MODELNAMES
FILE NAME: D876E84-I5570-sht-SgnDtl-46.dgn

ABNA DESIGN FIRM REG. 184.002117

USER NAME = jacobspw18lcs04$	DESIGNED -	REVISED -	
	DRAWN -	REVISED -	
PLOT SCALE = 0.16666667 ' / in.	CHECKED -	REVISED -	
PLOT DATE = 10/2/2025	DATE - 2025/10/03	REVISED -	

STATE OF ILLINOIS
DEPARTMENT OF TRANSPORTATION

SIGN DETAILS

SCALE: NTS | SHEET 46 OF 73 SHEETS | STA. TO STA.

F.A.I. RTE.	SECTION	COUNTY	TOTAL SHEETS	SHEET NO.
70	Section82-(5,6)RS-2, 60-6RS-2	MADISON & ST. CLAIR	678	301
		CONTRACT NO. 76E84		
	ILLINOIS	FED. AID PROJECT		

STRUCTURE NO. 8C060I055R007.6 (TO BE REMOVED)
STA. A 347+18.40 FAI-55 70
EXISTING GUIDE SIGN ON STRUCTURE (TO BE REMOVED)
PROPOSED GUIDE SIGN TO BE GROUND MOUNTED AT STA 347+38.23 OFFSET 81.6' RT

STRUCTURAL STEEL SIGN SUPPORT - BREAKAWAY									CONCRETE FOUNDATIONS	SIGN PANEL - TYPE 3	SIGN PANEL REMOVAL - TYPE 3
SIZE	NEAR POST		MIDDLE POST		FAR POST		STUB POST (FT)	WEIGHT (POUND)			
	OFFSET (FT)	LENGTH (FT)	OFFSET (FT)	LENGTH (FT)	OFFSET (FT)	LENGTH (FT)			CU YD	SF	SF
W14X38	73.83	24.75	81.77	25.25	88.98	25.75	10.5	3277.5	6.27	365.5	365.5

PHOTO COURTESY OF GOOGLE MAPS

SIGN DETAIL
1:60

WIDTH x HGHT.	21'–6" x 17'–0"	
BORDER WIDTH	2"	
CORNER RADIUS	12"	
MOUNTING	Ground	
BACKGROUND	TYPE:	Reflective – ZZ
	COLOR:	Green
LEGEND/BORDER	TYPE:	Reflective – ZZ
	COLOR:	White

SYMBOL	ROT	X	Y	WID	HT
M1_1	360	99	112	60	48

Dimensions are in inches.tenths

Letter locations are panel edge to lower left corner

LETTER POSITIONS (X)																		LENGTH	SERIES/SIZE
E	X	I	T	1	0														E 2000
175.8	185	196.1	199.9	222.5	230.4													31.6,20.6	10,15
I	n	t	e	r	s	t	a	t	e		2	7	0						EM 2000
12.3	23.1	42.3	57.3	76.7	89.3	106.7	121.7	140.9	155.9	169.1	189.1	208.7	228.9					233.4	20/15
M	e	m	p	h	i	s													EM 2000
60.7	84.3	103.7	133.7	153.1	174.3	184.1												136.6	20/15
1	M	I	L	E															E 2000
94.4	123.8	138.2	143.5	154.6														69.1	18,12

MODEL: $MODELNAMES
FILE NAME: D876E84-I5570-sht-SgnDtl-47.dgn

ABNA DESIGN FIRM REG. 184.002117

USER NAME = jacobspw18ics04$	DESIGNED -	REVISED -	
	DRAWN -	REVISED -	
PLOT SCALE = 0.16666667 ' / in.	CHECKED -	REVISED -	
PLOT DATE = 10/2/2025	DATE - 2025/10/03	REVISED -	

STATE OF ILLINOIS
DEPARTMENT OF TRANSPORTATION

SIGN DETAILS

SCALE: NTS | SHEET 47 OF 73 SHEETS | STA. | TO STA.

F.A.I. RTE.	SECTION	COUNTY	TOTAL SHEETS	SHEET NO.
70	Section82-(5,6)RS-2, 60-6RS-2	MADISON & ST. CLAIR	678	302

CONTRACT NO. 76E84

ILLINOIS | FED. AID PROJECT

STA. A 356+57.62 FAI-55 70
EXISTING GUIDE SIGN ON STRUCTURAL STEEL SIGN SUPPORT
PROPOSED GUIDE SIGN ON STRUCTURAL STEEL SIGN SUPPORT AT STA. A 356+57.62 OFFSET 100 FT

STRUCTURAL STEEL SIGN SUPPORT - BREAKAWAY							CONCRETE FOUNDATIONS	SIGN PANEL - TYPE 3	SIGN PANEL REMOVAL - TYPE 3
SIZE	NEAR POST		FAR POST		STUB POST (FT)	WEIGHT (POUND)			
	OFFSET (FT)	LENGTH (FT)	OFFSET (FT)	LENGTH (FT)			CU YD	SF	SF
W14X38	94.48	26.6	104.24	26.64	7	2289.12	4.18	216	216

PHOTO COURTESY OF GOOGLE MAPS

SIGN DETAIL
1:60

WIDTH x HGHT.	16'–0" x 13'–6"
BORDER WIDTH	2"
CORNER RADIUS	12"
MOUNTING	Ground
BACKGROUND	TYPE: Reflective – ZZ
	COLOR: Brown
LEGEND/BORDER	TYPE: Reflective – ZZ
	COLOR: White

SYMBOL	ROT	X	Y	WID	HT
M1_1	360	73.5	10.7	45	36

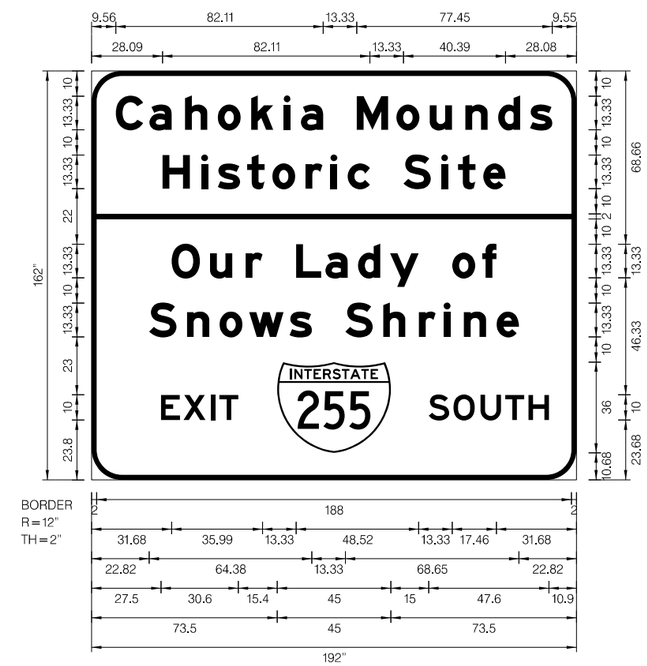

Dimensions are in inches.tenths

Letter locations are panel edge to lower left corner

LETTER POSITIONS (X)																		LENGTH	SERIES/SIZE
C	a	h	o	k	i	a	M	o	u	n	d	s							EM 2000
9.6	22.9	37	49.9	63.1	76.1	82.9	105	120.7	133.9	148.1	161	173.6						172.9	13.3/10
H	i	s	t	o	r	i	c	S	i	t	e								EM 2000
28.1	43.4	49.9	61.5	71.5	84.7	94.6	101.4	123.5	138.5	145.1	155.1							135.8	13.3/10
O	u	r	L	a	d	y	o	f											EM 2000
31.7	46.9	61	81	92.6	105.5	118.2	142.9	154.7										128.6	13.3/10
S	n	o	w	s	S	h	r	i	n	e									EM 2000
22.8	37.7	50.7	62.4	78.4	100.5	115.5	129.6	139.5	147.5	160.4								146.4	13.3/10
E	X	I	T	S	O	U	T	H											E 2000
27.5	36.4	47.1	50.6	133.5	143.3	154	163.8	173										30.6,47.6	10

MODEL: $MODELNAMES$
FILE NAME: D876E84-I5570-sht-SignDtl-48.dgn

ABNA DESIGN FIRM REG. 184.002117

USER NAME = jacobspw18ics04$	DESIGNED -	REVISED -	
	DRAWN -	REVISED -	
PLOT SCALE = 0.16666667 ' / in.	CHECKED -	REVISED -	
PLOT DATE = 10/2/2025	DATE - 2025/10/03	REVISED -	

STATE OF ILLINOIS
DEPARTMENT OF TRANSPORTATION

SIGN DETAILS

SCALE: NTS | SHEET 48 OF 73 SHEETS | STA. TO STA.

F.A.I. RTE.	SECTION	COUNTY	TOTAL SHEETS	SHEET NO.
70	Section82-(5,6)RS-2, 60-6RS-2	MADISON & ST. CLAIR	678	303

CONTRACT NO. 76E84
ILLINOIS | FED. AID PROJECT

STA. A 359+08.81 FAI-55 70
EXISTING GUIDE SIGN ON STRUCTURAL STEEL SIGN SUPPORT
PROPOSED GUIDE SIGN ON STRUCTURAL STEEL SIGN SUPPORT AT STA. A 359+03.81 OFFSET -100 FT

STRUCTURAL STEEL SIGN SUPPORT - BREAKAWAY							CONCRETE FOUNDATIONS	SIGN PANEL - TYPE 3	SIGN PANEL REMOVAL - TYPE 3
SIZE	NEAR POST		FAR POST		STUB POST (FT)	WEIGHT (POUND)			
	OFFSET (FT)	LENGTH (FT)	OFFSET (FT)	LENGTH (FT)			CU YD	SF	SF
W10X12	94.18	16.99	104.83	23.29	6	1018.16	2.36	55	55

PHOTO COURTESY OF GOOGLE MAPS

SIGN DETAIL
1:60

WIDTH x HGHT.	11'–0" x 5'–0"	
BORDER WIDTH	1.75"	
CORNER RADIUS	6"	
MOUNTING	Ground	
BACKGROUND	TYPE:	Reflective – ZZ
	COLOR:	Green
LEGEND/BORDER	TYPE:	Reflective – ZZ
	COLOR:	White

SYMBOL	ROT	X	Y	WID	HT
M1–I100 –2	0	9.8	35	22.5	18

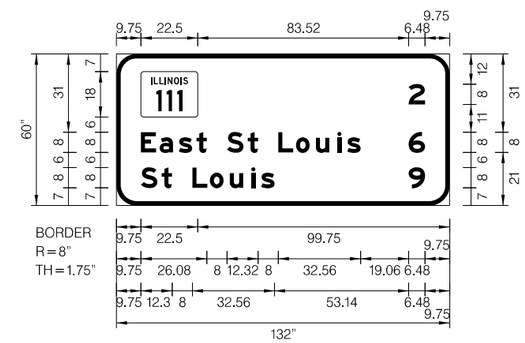

Dimensions are in inches.tenths

Letter locations are panel edge to lower left corner

LETTER POSITIONS (X)																		LENGTH	SERIES/SIZE
2																			EM 2000
115.8																		6.5	8
E	a	s	t	S	t	L	o	u	i	s	6								EM 2000
9.8	17.1	24.7	31.7	43.8	52	64.2	71.1	79	87.5	91.4	115.8							112.5	8/6
S	t	L	o	u	i	s	9												EM 2000
9.8	17.9	30.1	37	45	53.4	57.4	115.8											112.5	8/6

MODEL: $MODELNAME$
FILE NAME: D876E84-I5570-sht-SignDt-49.dgn

ABNA DESIGN FIRM REG. 184.002117

USER NAME = jacobspw18ics04$	DESIGNED -	REVISED -
	DRAWN -	REVISED -
PLOT SCALE = 0.16666667 ' / in.	CHECKED -	REVISED -
PLOT DATE = 10/2/2025	DATE - 2025/10/03	REVISED -

STATE OF ILLINOIS
DEPARTMENT OF TRANSPORTATION

SIGN DETAILS

SCALE: NTS | SHEET 49 OF 73 SHEETS | STA. | TO STA.

F.A.I. RTE.	SECTION	COUNTY	TOTAL SHEETS	SHEET NO.
70	Section82-(5,6)RS-2, 60-6RS-2	MADISON & ST. CLAIR	678	304

CONTRACT NO. 76E84

ILLINOIS | FED. AID PROJECT

STA. A 369+46.71 FAI-55 70
EXISTING GUIDE SIGN ON STRUCTURAL STEEL SIGN SUPPORT
PROPOSED GUIDE SIGN ON STRUCTURAL STEEL SIGN SUPPORT AT STA. A 369+46.71 OFFSET 97 FT

STRUCTURAL STEEL SIGN SUPPORT - BREAKAWAY							CONCRETE FOUNDATIONS	SIGN PANEL - TYPE 3	SIGN PANEL REMOVAL - TYPE 3
SIZE	NEAR POST		FAR POST		STUB POST (FT)	WEIGHT (POUND)			
	OFFSET (FT)	LENGTH (FT)	OFFSET (FT)	LENGTH (FT)			CU YD	SF	SF
W10X22	94.35	18.74	103.32	18.58	6	953.04	2.36	108	108

PHOTO COURTESY OF GOOGLE MAPS

SIGN DETAIL
1:60

WIDTH x HGHT.	13'–6" x 8'–0"	
BORDER WIDTH	2"	
CORNER RADIUS	12"	
MOUNTING	Ground	
BACKGROUND	TYPE:	Reflective – ZZ
	COLOR:	Green
LEGEND/BORDER	TYPE:	Reflective – ZZ
	COLOR:	White

SYMBOL	ROT	X	Y	WID	HT

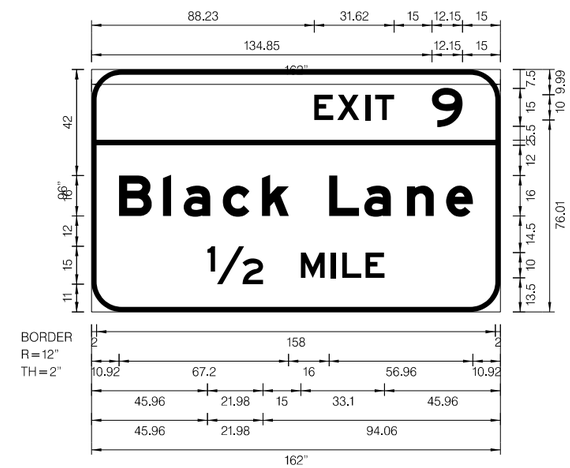

Dimensions are in inches.tenths

Letter locations are panel edge to lower left corner

LETTER POSITIONS (X)																		LENGTH	SERIES/SIZE
E	X	I	T	9															E 2000
88.2	97.4	108.5	112.3	134.9														31.6,12.2	10,15
B	I	a	c	k	L	a	n	e											EM 2000
10.9	28.4	36.5	52	67.6	94.1	108	125	140.5										140.2	16/12
1/2	M	I	L	E															E 2000
46	82.9	94.9	99.3	108.5														70.1	15,10

MODEL: $MODELNAMES
FILE NAME: D876E84-I5570-sht-SignDtl-50.dgn

ABNA DESIGN FIRM REG. 184.002117

USER NAME = jacobspw18lcs01$	DESIGNED -	REVISED -	
	DRAWN -	REVISED -	
PLOT SCALE = 0.16666667 ' / in.	CHECKED -	REVISED -	
PLOT DATE = 10/2/2025	DATE - 2025/10/03	REVISED -	

STATE OF ILLINOIS
DEPARTMENT OF TRANSPORTATION

SIGN DETAILS

SCALE: NTS | SHEET 50 OF 73 SHEETS | STA. | TO STA.

F.A.I. RTE.	SECTION	COUNTY	TOTAL SHEETS	SHEET NO.
70	Section82-(5,6)RS-2, 60-6RS-2	MADISON & ST. CLAIR	678	305
		CONTRACT NO. 76E84		
		ILLINOIS FED. AID PROJECT		

STA. A 183+98.65 FAI-55 70
EXISTING GUIDE SIGN ON STRUCTURAL STEEL SIGN SUPPORT
PROPOSED GUIDE SIGN ON STRUCTURAL STEEL SIGN SUPPORT AT STA. A 183+98.65 OFFSET 97 FT

STRUCTURAL STEEL SIGN SUPPORT - BREAKAWAY							CONCRETE FOUNDATIONS	SIGN PANEL - TYPE 3	SIGN PANEL REMOVAL - TYPE 3
SIZE	NEAR POST		FAR POST		STUB POST (FT)	WEIGHT (POUND)			
	OFFSET (FT)	LENGTH (FT)	OFFSET (FT)	LENGTH (FT)			CU YD	SF	SF
W8X18	91.52	20.83	100.81	19.27	5	811.8	1.4	57.5	57.5

PHOTO COURTESY OF GOOGLE MAPS

SIGN DETAIL
1:60

WIDTH x HGHT.	11'–6" x 5'–0"	
BORDER WIDTH	1.75"	
CORNER RADIUS	8"	
MOUNTING	Ground	
BACKGROUND	TYPE:	Reflective – ZZ
	COLOR:	Green
LEGEND/BORDER	TYPE:	Reflective – ZZ
	COLOR:	White

SYMBOL	ROT	X	Y	WID	HT
M1–I100 –2	0	8.8	35	22.5	18

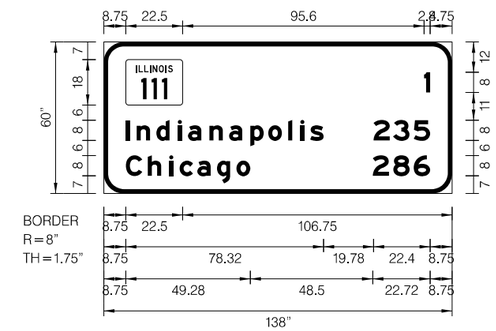

Dimensions are in inches.tenths

Letter locations are panel edge to lower left corner

LETTER POSITIONS (X)																		LENGTH	SERIES/SIZE
1																			EM 2000
126.9																		2.4	8
I	n	d	i	a	n	a	p	o	l	i	s	2	3	5					EM 2000
8.8	13.1	20.8	29.3	33.4	41.9	49.6	58.1	65.2	73.1	77.9	81.8	106.9	114.6	122.8				120.5	8/6
C	h	i	c	a	g	o	2	8	6										EM 2000
8.8	17.5	26	30	37.1	44.8	52.6	106.5	114.7	122.8									120.5	8/6

MODEL: $MODELNAMES
FILE NAME: D876E84-I5570-sht-SignDt-51.dgn

ABNA DESIGN FIRM REG. 184.002117

USER NAME = jacobspw18lcs01$	DESIGNED -	REVISED -
	DRAWN -	REVISED -
PLOT SCALE = 0.16666667 ' / in.	CHECKED -	REVISED -
PLOT DATE = 10/2/2025	DATE - 2025/10/03	REVISED -

STATE OF ILLINOIS
DEPARTMENT OF TRANSPORTATION

SIGN DETAILS

SCALE: NTS | SHEET 51 OF 73 SHEETS | STA. | TO STA.

F.A.I. RTE.	SECTION	COUNTY	TOTAL SHEETS	SHEET NO.
70	Section82-(5,6)RS-2, 60-6RS-2	MADISON & ST. CLAIR	678	306

CONTRACT NO. 76E84

ILLINOIS | FED. AID PROJECT

STA. A 186+48.00 FAI-55 70
EXISTING GUIDE SIGN ON STRUCTURAL STEEL SIGN SUPPORT
PROPOSED GUIDE SIGN ON STRUCTURAL STEEL SIGN SUPPORT AT STA. A 186+48.00 OFFSET -95 FT

STRUCTURAL STEEL SIGN SUPPORT - BREAKAWAY							CONCRETE FOUNDATIONS	SIGN PANEL - TYPE 3	SIGN PANEL REMOVAL - TYPE 3
SIZE	NEAR POST		FAR POST		STUB POST (FT)	WEIGHT (POUND)	CU YD	SF	SF
	OFFSET (FT)	LENGTH (FT)	OFFSET (FT)	LENGTH (FT)					
W12X26	89.32	22.67	98.60	24.82	6	1390.74	2.82	108	108

PHOTO COURTESY OF GOOGLE MAPS

SIGN DETAIL
1:60

WIDTH x HGHT.	12'-0" x 9'-0"	
BORDER WIDTH	2"	
CORNER RADIUS	12"	
MOUNTING	Ground	
BACKGROUND	TYPE:	Reflective – ZZ
	COLOR:	Brown
LEGEND/BORDER	TYPE:	Reflective – ZZ
	COLOR:	White

SYMBOL	ROT	X	Y	WID	HT

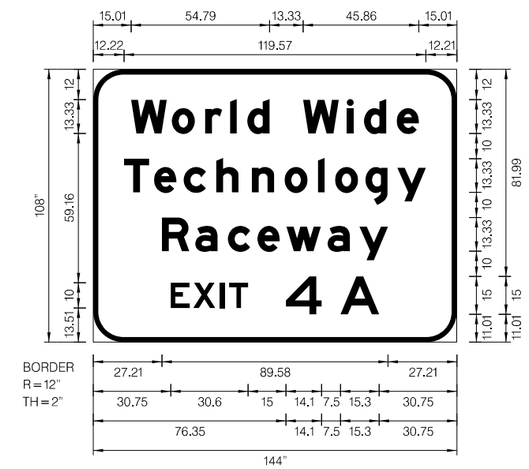

Dimensions are in inches.tenths

Letter locations are panel edge to lower left corner

LETTER POSITIONS (X)																			LENGTH	SERIES/SIZE
W	o	r	l	d	W	i	d	e												EM 2000
15	31.1	44.3	54.2	61	83.1	100.5	107.3	120.2											114	13.3/10
T	e	c	h	n	o	l	o	g	y											EM 2000
12.2	24.1	35.8	48.7	62.9	75.8	89	95.8	107.8	120.5										119.6	13.3/10
R	a	c	e	w	a	y														EM 2000
27.2	40.4	53.3	65.1	76.5	92.8	105.5													89.6	13.3/10
E	X	I	T	4	A															E 2000
30.8	39.7	50.4	53.9	76.4	98														82.5	10.15

MODEL: $MODELNAMES$
FILE NAME: D876E84-55570-sht-SignDtl-52.dgn

ABNA DESIGN FIRM REG. 184.002117

USER NAME = jacobspw18ics01$	DESIGNED -	REVISED -
	DRAWN -	REVISED -
PLOT SCALE = 0.16666667 ' / in.	CHECKED -	REVISED -
PLOT DATE = 10/2/2025	DATE - 2025/10/03	REVISED -

STATE OF ILLINOIS
DEPARTMENT OF TRANSPORTATION

SIGN DETAILS

SCALE: NTS | SHEET 52 OF 73 SHEETS | STA. | TO STA.

F.A.I. RTE.	SECTION	COUNTY	TOTAL SHEETS	SHEET NO.
70	Section82-(5,6)RS-2, 60-6RS-2	MADISON & ST. CLAIR	678	307

CONTRACT NO. 76E84

ILLINOIS | FED. AID PROJECT

STRUCTURE NO. 8S082I055L005.0
STA. A 195+92.37 FAI-55 70
EXISTING GUIDE SIGN ON STRUCTURE
PROPOSED GUIDE SIGN ON STRUCTURE

SIGN PANEL REMOVAL - TYPE 3, 175.00 SF
SIGN PANEL - TYPE 3, 206.25 SF

PHOTO COURTESY OF GOOGLE MAPS

SIGN DETAIL
1:60

WIDTH x HGHT.	12'-6" x 16'-6"	
BORDER WIDTH	2"	
CORNER RADIUS	12"	
MOUNTING	Overhead	
BACKGROUND	TYPE:	Reflective – ZZ
	COLOR:	Green /Yellow
LEGEND/BORDER	TYPE:	Reflective – ZZ
	COLOR:	White /Black

SYMBOL	ROT	X	Y	WID	HT
M1_1	0	23	69	36	36
M1-I100 -1	360	91	69	36	36

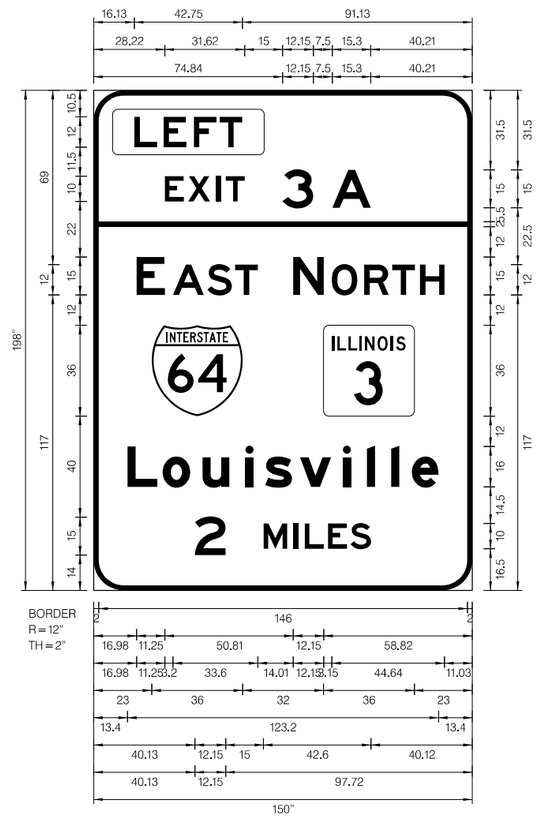

Dimensions are in inches.tenths

Letter locations are panel edge to lower left corner

LETTER POSITIONS (X)																		LENGTH	SERIES/SIZE
L	E	F	T																E 2000
16.1	27.7	39.7	49.9															42.8	12
E	X	I	T	3	A														E 2000
28.2	37.4	48.5	52.3	74.8	94.5													31.6, 35	10, 15
E	A	S	T																E 2000
17	31.4	45	56															48.1	15,12
N	O	R	T	H															E 2000
79	94.3	107.2	118.2	129.3														59.9	15,12
L	o	u	i	s	v	i	l	l	e										EM 2000
13.4	27.3	43.2	60.1	68	81.7	98.7	108.3	117.9	126									123.2	16/12
2	M	I	L	E	S														E 2000
40.1	67.3	79.3	83.7	92.9	101.8													69.8	15,10

MODEL: $MODELNAMES
FILE NAME: D876E84-I5570-sht-SignDH-53.dgn

ABNA DESIGN FIRM REG. 184.002117

USER NAME = jacobspw18lcs04$	DESIGNED -	REVISED -	
	DRAWN -	REVISED -	
PLOT SCALE = 0.16666667 ' / in.	CHECKED -	REVISED -	
PLOT DATE = 10/2/2025	DATE - 2025/10/03	REVISED -	

STATE OF ILLINOIS
DEPARTMENT OF TRANSPORTATION

SIGN DETAILS

SCALE: NTS | SHEET 53 OF 73 SHEETS | STA. | TO STA.

F.A.I. RTE.	SECTION	COUNTY	TOTAL SHEETS	SHEET NO.
70	Section82-(5,6)RS-2, 60-6RS-2	MADISON & ST. CLAIR	678	308

CONTRACT NO. 76E84
ILLINOIS | FED. AID PROJECT

STRUCTURE NO. 8S082I055L005.0
STA. A 195+92.37 FAI-55 70
EXISTING GUIDE SIGN ON STRUCTURE
PROPOSED GUIDE SIGN ON STRUCTURE

SIGN PANEL REMOVAL - TYPE 3, 311.75 SF
SIGN PANEL - TYPE 3, 288.75 SF

PHOTO COURTESY OF GOOGLE MAPS

SIGN DETAIL
1:60

WIDTH x HGHT.	17'-6" x 16'-6"	
BORDER WIDTH	2"	
CORNER RADIUS	12"	
MOUNTING	Overhead	
BACKGROUND	TYPE:	Reflective – ZZ
	COLOR:	Green
LEGEND/BORDER	TYPE:	Reflective – ZZ
	COLOR:	White

SYMBOL	ROT	X	Y	WID	HT
M1_1	0	54.6	120	36	36

Dimensions are in inches.tenths

Letter locations are panel edge to lower left corner

LETTER POSITIONS (X)																		LENGTH	SERIES/SIZE
E	X	I	T	3	C	–	B												E 2000
86.7	95.9	107	110.8	133.3	153	170.1	182.9											31.6, 61.7	10, 15
W	E	S	T																E 2000
105.6	124.7	135.4	146.4															49.8	15,12
E	x	c	h	a	n	g	e	A	v	e									EM 2000
14.5	29.2	45.6	61.1	76.6	93.6	109.1	124.6	151.2	169.4	184.9								181	16/12
S	T	L	A	i	r	p	o	r	t										EM 2000
31.1	46.4	61.2	89	109	118.6	130.4	144.5	160.4	170.6									147.8	16,16/12
K	a	n	s	a	s	C	i	t	y										EM 2000
28	43.2	60.2	75.4	89.5	104.7	131.2	148.7	156.7	168.4									153.9	16/12
2	M	I	L	E	S														E 2000
74.9	102	114	118.4	127.6	136.5													69.8	15,10

MODEL: $MODELNAMES
FILE NAME: D876E84-I5570-sht-SgnDtl-54.dgn

ABNA DESIGN FIRM REG. 184.002117

USER NAME = jacobspw18ics01$	DESIGNED -	REVISED -	
	DRAWN -	REVISED -	
PLOT SCALE = 0.16666667 ' / in.	CHECKED -	REVISED -	
PLOT DATE = 10/2/2025	DATE - 2025/10/03	REVISED -	

STATE OF ILLINOIS
DEPARTMENT OF TRANSPORTATION

SIGN DETAILS

SCALE: NTS | SHEET 54 OF 73 SHEETS | STA. | TO STA.

F.A.I. RTE.	SECTION	COUNTY	TOTAL SHEETS	SHEET NO.
70	Section82-(5,6)RS-2, 60-6RS-2	MADISON & ST. CLAIR	678	309

CONTRACT NO. 76E84

ILLINOIS | FED. AID PROJECT

STA. A 209+48.78 FAI-55 70
EXISTING GUIDE SIGN ON STRUCTURAL STEEL SIGN SUPPORT
PROPOSED GUIDE SIGN ON STRUCTURAL STEEL SIGN SUPPORT AT STA. A 209+48.78 OFFSET -102 FT

STRUCTURAL STEEL SIGN SUPPORT - BREAKAWAY							CONCRETE FOUNDATIONS	SIGN PANEL - TYPE 3	SIGN PANEL REMOVAL - TYPE 3
SIZE	NEAR POST		FAR POST		STUB POST (FT)	WEIGHT (POUND)			
	OFFSET (FT)	LENGTH (FT)	OFFSET (FT)	LENGTH (FT)			CU YD	SF	SF
W16X45	95.89	28.82	107.00	29.92	7	2958.3	4.46	253.75	253.75

PHOTO COURTESY OF GOOGLE MAPS

SIGN DETAIL
1:60

WIDTH x HGHT.	17'-6" x 14'-6"	
BORDER WIDTH	2"	
CORNER RADIUS	12"	
MOUNTING	Ground	
BACKGROUND	TYPE:	Reflective – ZZ
	COLOR:	Green
LEGEND/BORDER	TYPE:	Reflective – ZZ
	COLOR:	White

SYMBOL	ROT	X	Y	WID	HT
M1-I100 -2	0	82.5	96	45	36

Dimensions are in inches.tenths

Letter locations are panel edge to lower left corner

LETTER POSITIONS (X)																		LENGTH	SERIES/SIZE
E	X	I	T																E 2000
81.6	90.8	101.9	105.7															31.6	10
4	B	–	A																E 2000
128.2	149.8	167	179.7															66.8	15
G	r	a	n	i	t	e	C	i	t	y									EM 2000
25.3	43.1	53.5	70.4	87.4	95.4	107.4	134	151.4	159.4	171.1								159.4	16/12
F	a	r	i	m	o	n	t	C	i	t	y								EM 2000
14	28.8	45.7	57.6	67.2	89.7	105.6	120.9	145.2	162.7	170.7	182.4							181.9	16/12
1	M	I	L	E															E 2000
78.7	98.2	110.2	114.6	123.8														52.6	15,10

MODEL: $MODELNAMES
FILE NAME: D876E84-15570-sht-SignDI-55.dgn

ABNA DESIGN FIRM REG. 184.002117

USER NAME = jacobspw18ics04$	DESIGNED -	REVISED -	
	DRAWN -	REVISED -	
PLOT SCALE = 0.16666667 ' / in.	CHECKED -	REVISED -	
PLOT DATE = 10/2/2025	DATE - 2025/10/03	REVISED -	

STATE OF ILLINOIS
DEPARTMENT OF TRANSPORTATION

SIGN DETAILS

SCALE: NTS | SHEET 55 OF 73 SHEETS | STA. | TO STA.

F.A.I. RTE.	SECTION	COUNTY	TOTAL SHEETS	SHEET NO.
70	Section82-(5,6)RS-2, 60-6RS-2	MADISON & ST. CLAIR	678	310

CONTRACT NO. 76E84

ILLINOIS | FED. AID PROJECT

STA. A 211+64.49 FAI-55 70
EXISTING GUIDE SIGN ON STRUCTURAL STEEL SIGN SUPPORT
PROPOSED GUIDE SIGN ON STRUCTURAL STEEL SIGN SUPPORT AT STA. A 211+64.49 OFFSET 94 FT

STRUCTURAL STEEL SIGN SUPPORT - BREAKAWAY							CONCRETE FOUNDATIONS	SIGN PANEL - TYPE 3	SIGN PANEL REMOVAL - TYPE 3
SIZE	NEAR POST		FAR POST		STUB POST (FT)	WEIGHT (POUND)			
	OFFSET (FT)	LENGTH (FT)	OFFSET (FT)	LENGTH (FT)			CU YD	SF	SF
W14X38	88.60	23.83	99.14	25.34	7	2134.46	4.18	198	198

PHOTO COURTESY OF GOOGLE MAPS

SIGN DETAIL
1:60

WIDTH x HGHT.	16'–6" x 12'–0"	
BORDER WIDTH	2"	
CORNER RADIUS	12"	
MOUNTING	Ground	
BACKGROUND	TYPE:	Reflective – ZZ
	COLOR:	Brown
LEGEND/BORDER	TYPE:	Reflective – ZZ
	COLOR:	White

SYMBOL	ROT	X	Y	WID	HT

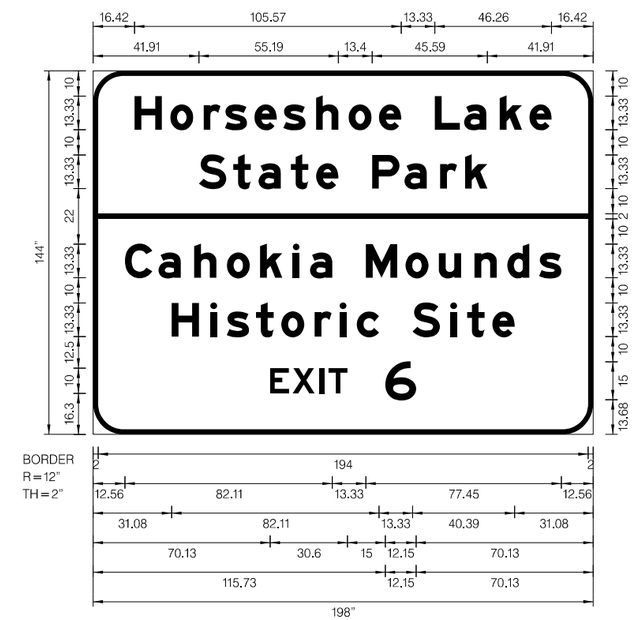

Dimensions are in inches.tenths

Letter locations are panel edge to lower left corner

LETTER POSITIONS (X)																		LENGTH	SERIES/SIZE
H	o	r	s	e	s	h	o	e	L	a	k	e							EM 2000
16.4	30.6	43.7	52.1	63.9	75.3	88.3	101.2	113.2	135.3	146.9	161.1	172.8						165.2	13.3/10
S	t	a	t	e	P	a	r	k											EM 2000
41.9	55.5	65.5	78.3	88.3	110.5	123.3	137.4	147.3										114.2	13.3/10
C	a	h	o	k	i	a	M	o	u	n	d	s							EM 2000
12.6	25.9	40	52.9	66.1	79.1	85.9	108	123.7	136.9	151.1	164	176.6						172.9	13.3/10
H	i	s	t	o	r	i	c	S	i	t	e								EM 2000
31.1	46.4	52.9	64.5	74.5	87.7	97.6	104.4	126.5	141.5	148.1	158.1							135.8	13.3/10
E	X	I	T	6															E 2000
70.1	79	89.7	93.2	115.7														57.8	10,15

MODEL: $MODELNAMES
FILE NAME: D876E84-I5570-sht-SignDtl-56.dgn

ABNA DESIGN FIRM REG. 184.002117

USER NAME = jacobspw18lcs03$	DESIGNED -	REVISED -
	DRAWN -	REVISED -
PLOT SCALE = 0.16666667 ' / in.	CHECKED -	REVISED -
PLOT DATE = 10/2/2025	DATE - 2025/10/03	REVISED -

STATE OF ILLINOIS
DEPARTMENT OF TRANSPORTATION

SIGN DETAILS

SCALE: NTS | SHEET 56 OF 73 SHEETS | STA. | TO STA.

F.A.I. RTE.	SECTION	COUNTY	TOTAL SHEETS	SHEET NO.
70	Section82-(5,6)RS-2, 60-6RS-2	MADISON & ST. CLAIR	678	311

CONTRACT NO. 76E84

ILLINOIS | FED. AID PROJECT

STA. A 220+59.49 FAI-55 70
EXISTING GUIDE SIGN ON STRUCTURAL STEEL SIGN SUPPORT
PROPOSED GUIDE SIGN ON TUBULAR STEEL SIGN SUPPORT AT STA. A 220+64.41 OFFSET 87' LT

TUBULAR STEEL SIGN SUPPORT - BREAKAWAY					CONCRETE FOUNDATIONS	SIGN PANEL - TYPE 2	SIGN PANEL REMOVAL - TYPE 2
SIZE	POST		STUB POST (FT)	WEIGHT (POUND)			
	OFFSET (FT)	LENGTH (FT)			CU YD	SF	SF
HSS4X3X1/4	-87.0	14.32	2.5	176.8	0.7	16.5	16.5

PHOTO COURTESY OF GOOGLE MAPS

SIGN DETAIL
1:60

WIDTH x HGHT.	5'-6" x 3'-0"	
BORDER WIDTH	1.75"	
CORNER RADIUS	5"	
MOUNTING	Ground	
BACKGROUND	TYPE:	Reflective – ZZ
	COLOR:	Green
LEGEND/BORDER	TYPE:	Reflective – ZZ
	COLOR:	White

SYMBOL	ROT	X	Y	WID	HT

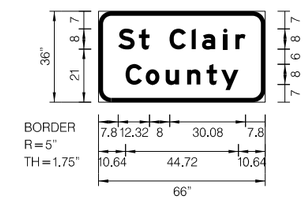

Dimensions are in inches.tenths

Letter locations are panel edge to lower left corner

LETTER POSITIONS (X)																		LENGTH	SERIES/SIZE
S	t	C	l	a	i	r													EM 2000
7.8	16	28.1	36.8	40.9	49.4	54.2												50.4	8/6
C	o	u	n	t	y														EM 2000
10.6	18.6	26.6	35	42.7	48.6													44.7	8/6

MODEL: $MODELNAME$
FILE NAME: D876E84-1557Cshi-SignDtl-57.dgn

ABNA DESIGN FIRM REG. 184.002117

USER NAME = jacobspw18ics03$	DESIGNED -	REVISED -	
	DRAWN -	REVISED -	
PLOT SCALE = 0.16666667 ' / in.	CHECKED -	REVISED -	
PLOT DATE = 10/2/2025	DATE - 2025/10/03	REVISED -	

STATE OF ILLINOIS
DEPARTMENT OF TRANSPORTATION

SIGN DETAILS

SCALE: NTS | SHEET 57 OF 73 SHEETS | STA. | TO STA.

F.A.I. RTE.	SECTION	COUNTY	TOTAL SHEETS	SHEET NO.
70	Section82-(5,6)RS-2, 60-6RS-2	MADISON & ST. CLAIR	678	312

CONTRACT NO. 76E84

ILLINOIS | FED. AID PROJECT

STA. A 222+79.17 FAI-55 70
EXISTING GUIDE SIGN ON STRUCTURAL STEEL SIGN SUPPORT
PROPOSED GUIDE SIGN ON TUBULAR STEEL SIGN SUPPORT AT STA. A 222+84.17 OFFSET 86.8' RT

TUBULAR STEEL SIGN SUPPORT - BREAKAWAY					CONCRETE FOUNDATIONS	SIGN PANEL - TYPE 2	SIGN PANEL REMOVAL - TYPE 2
SIZE	POST		STUB POST (FT)	WEIGHT (POUND)			
	OFFSET (FT)	LENGTH (FT)			CU YD	SF	SF
HSS4X3X1/4	86.8	14.6	2.5	179.8	0.7	16.5	16.5

PHOTO COURTESY OF GOOGLE MAPS

SIGN DETAIL
1:60

WIDTH x HGHT.	5'-6" x 3'-0"
BORDER WIDTH	1.75"
CORNER RADIUS	5"
MOUNTING	Ground
BACKGROUND	TYPE: Reflective – ZZ
	COLOR: Green
LEGEND/BORDER	TYPE: Reflective – ZZ
	COLOR: White

SYMBOL	ROT	X	Y	WID	HT

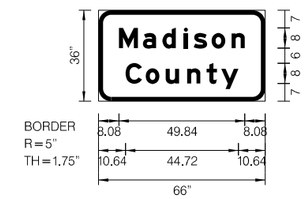

Dimensions are in inches.tenths

Letter locations are panel edge to lower left corner

LETTER POSITIONS (X)																		LENGTH	SERIES/SIZE
M	a	d	i	s	o	n													EM 2000
8.1	17.5	25.3	33.8	37.7	44.7	52.6												49.8	8/6
C	o	u	n	t	y														EM 2000
10.6	18.6	26.6	35	42.7	48.6													44.7	8/6

MODEL: $MODELNAMES
FILE NAME: D876E84-I5570-sht-SgnDt-58.dgn

ABNA DESIGN FIRM REG. 184.002117

USER NAME = jacobspw18lcs03$	DESIGNED -	REVISED -
	DRAWN -	REVISED -
PLOT SCALE = 0.16666667 ' / in.	CHECKED -	REVISED -
PLOT DATE = 10/2/2025	DATE - 2025/10/03	REVISED -

STATE OF ILLINOIS
DEPARTMENT OF TRANSPORTATION

SIGN DETAILS

SCALE: NTS | SHEET 58 OF 73 SHEETS | STA. TO STA.

F.A.I. RTE.	SECTION	COUNTY	TOTAL SHEETS	SHEET NO.
70	Section82-(5,6)RS-2, 60-6RS-2	MADISON & ST. CLAIR	678	313

CONTRACT NO. 76E84

ILLINOIS | FED. AID PROJECT

STA. A 239+36.82 FAI-55 70
EXISTING GUIDE SIGN ON STRUCTURAL STEEL SIGN SUPPORT
PROPOSED GUIDE SIGN ON STRUCTURAL STEEL SIGN SUPPORT AT STA. A 239+36.82 OFFSET 99 FT

STRUCTURAL STEEL SIGN SUPPORT - BREAKAWAY							CONCRETE FOUNDATIONS	SIGN PANEL - TYPE 3	SIGN PANEL REMOVAL - TYPE 3
SIZE	NEAR POST		FAR POST		STUB POST (FT)	WEIGHT (POUND)			
	OFFSET (FT)	LENGTH (FT)	OFFSET (FT)	LENGTH (FT)			CU YD	SF	SF
W14X30	94.18	24.28	102.24	24.55	6	1644.9	3.8	114	114

PHOTO COURTESY OF GOOGLE MAPS

ILLINOIS STANDARD
XM-2

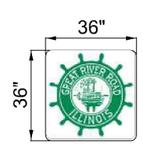

SIGN DETAIL
1:60

WIDTH x HGHT.	12'–0" x 9'–6"
BORDER WIDTH	2"
CORNER RADIUS	12"
MOUNTING	Ground
BACKGROUND	TYPE: Reflective – ZZ
	COLOR: Green
LEGEND/BORDER	TYPE: Reflective – ZZ
	COLOR: White

SYMBOL	ROT	X	Y	WID	HT
IL STANDARD XM–2	0	31.2	80	24	24

Dimensions are in inches.tenths

Letter locations are panel edge to lower left corner

LETTER POSITIONS (X)																		LENGTH	SERIES/SIZE
N	O	R	T	H															E 2000
65.2	75.6	86.3	95.5	104.7														47.6	10
G	r	e	a	t	R	i	v	e	r										EM 2000
11.1	25.9	34.6	46.3	59.1	79.4	93.8	100.3	113.3	126.2									121.7	13.3/10
R	o	a	d																EM 2000
48.5	61.7	73.7	86.7															46.9	13.3/10
E	X	I	T	6															E 2000
46.9	55.8	66.5	70	85														50.3	10,15

MODEL: $MODELNAMES
FILE NAME: D876E84-I5570-sht-SignDt-59.dgn

ABNA DESIGN FIRM REG. 184.002117

USER NAME = jacobspw18lcs04$	DESIGNED -	REVISED -
	DRAWN -	REVISED -
PLOT SCALE = 0.16666667 ' / in.	CHECKED -	REVISED -
PLOT DATE = 10/2/2025	DATE - 2025/10/03	REVISED -

STATE OF ILLINOIS
DEPARTMENT OF TRANSPORTATION

SIGN DETAILS

SCALE: NTS | SHEET 59 OF 73 SHEETS | STA. | TO STA.

F.A.I. RTE.	SECTION	COUNTY	TOTAL SHEETS	SHEET NO.
70	Section82-(5,6)RS-2, 60-6RS-2	MADISON & ST. CLAIR	678	314

CONTRACT NO. 76E84

ILLINOIS | FED. AID PROJECT

STA. A 241+46.69 FAI-55 70
EXISTING GUIDE SIGN ON WOOD SIGN SUPPORT
PROPOSED GUIDE SIGN ON WOOD SIGN SUPPORT AT STA. A 241+46.69 OFFSET 77 FT

SIGN PANEL REMOVAL - TYPE 2, 12.5 SF
SIGN PANEL - TYPE 2, 12.5 SF

PHOTO COURTESY OF GOOGLE MAPS

ILLINOIS STANDARD
XM-9

SIGN DETAIL
1:40

WIDTH x HGHT.	2'-6" x 5'-0"
BORDER WIDTH	1"
CORNER RADIUS	4"
MOUNTING	Ground
BACKGROUND	TYPE: Reflective – ZZ
	COLOR: Green
LEGEND/BORDER	TYPE: Reflective – ZZ
	COLOR: White

SYMBOL	ROT	X	Y	WID	HT
IL STANDARD XM-9	0	3	27	24	30

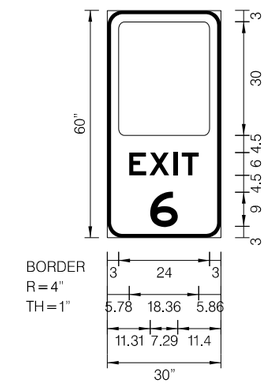

Dimensions are in inches.tenths

Letter locations are panel edge to lower left corner

LETTER POSITIONS (X)																		LENGTH	SERIES/SIZE
E	X	I	T																E 2000
5.8	11.1	17.5	19.6															18.4	6
6																			E 2000
11.3																		7.3	9

MODEL: $MODELNAMES
FILE NAME: D876E84-I5570-sht-SignDt-60.dgn

ABNA DESIGN FIRM REG. 184.002117

USER NAME = jacobspw18ics03$	DESIGNED -	REVISED -
	DRAWN -	REVISED -
PLOT SCALE = 0.16666667 ' / in.	CHECKED -	REVISED -
PLOT DATE = 10/2/2025	DATE - 2025/10/03	REVISED -

STATE OF ILLINOIS
DEPARTMENT OF TRANSPORTATION

SIGN DETAILS

SCALE: NTS | SHEET 60 OF 73 SHEETS | STA. TO STA.

F.A.I. RTE.	SECTION	COUNTY	TOTAL SHEETS	SHEET NO.
70	Section82-(5,6)RS-2, 60-6RS-2	MADISON & ST. CLAIR	678	315
		CONTRACT NO. 76E84		
		ILLINOIS	FED. AID PROJECT	

STA. 6+96.12 RAMP 4 (IL 101 INTERCHANGE)
EXISTING GUIDE SIGN ON STRUCTURAL STEEL SIGN SUPPORT
PROPOSED GUIDE SIGN ON STRUCTURAL STEEL SIGN SUPPORT AT STA. 6+96.12 OFFSET 36 FT

STRUCTURAL STEEL SIGN SUPPORT - BREAKAWAY							CONCRETE FOUNDATIONS	SIGN PANEL - TYPE 3	SIGN PANEL REMOVAL - TYPE 3
SIZE	NEAR POST		FAR POST		STUB POST (FT)	WEIGHT (POUND)			
	OFFSET (FT)	LENGTH (FT)	OFFSET (FT)	LENGTH (FT)			CU YD	SF	SF
W10X22	127.78	14.8	139.54	16.34	6	817.08	2.36	120	120

PHOTO COURTESY OF GOOGLE MAPS

SIGN DETAIL
1:60

WIDTH x HGHT.	20'-0" x 6'-0"
BORDER WIDTH	2"
CORNER RADIUS	9"
MOUNTING	Ground
BACKGROUND	TYPE: Reflective – ZZ
	COLOR: Blue
LEGEND/BORDER	TYPE: Reflective – ZZ
	COLOR: White

SYMBOL	ROT	X	Y	WID	HT
AR_Type D	270	204	19	16	24
LOGO36X48	360	16	9	48	36
LOGO36X48	360	80	9	48	36
LOGO36X48	360	144	9	48	36

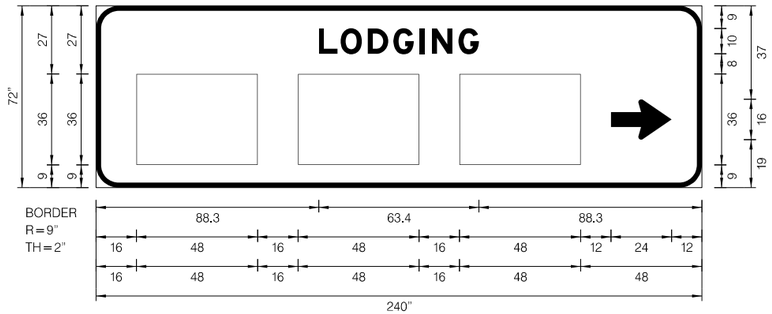

Dimensions are in inches.tenths

Letter locations are panel edge to lower left corner

LETTER POSITIONS (X)																		LENGTH	SERIES/SIZE
L	O	D	G	I	N	G													EM 2000
88.3	96.9	107.7	117.8	128.3	133.1	143.6												63.4	10

MODEL: $MODELNAMES
FILE NAME: D876E84-I5570-sht-SignDtl-61.dgn

ABNA DESIGN FIRM REG. 184.002117

USER NAME = jacobspw18cs01$	DESIGNED -	REVISED -
	DRAWN -	REVISED -
PLOT SCALE = 0.16666667 ' / in.	CHECKED -	REVISED -
PLOT DATE = 10/2/2025	DATE - 2025/10/03	REVISED -

STATE OF ILLINOIS
DEPARTMENT OF TRANSPORTATION

SIGN DETAILS

SCALE: NTS | SHEET 61 OF 73 SHEETS | STA. | TO STA.

F.A.I. RTE.	SECTION	COUNTY	TOTAL SHEETS	SHEET NO.
70	Section82-(5,6)RS-2, 60-6RS-2	MADISON & ST. CLAIR	678	316

CONTRACT NO. 76E84

ILLINOIS | FED. AID PROJECT

STA. 8+97.04 RAMP 4 (IL 101 INTERCHANGE)
EXISTING GUIDE SIGN ON STRUCTURAL STEEL SIGN SUPPORT
PROPOSED GUIDE SIGN ON STRUCTURAL STEEL SIGN SUPPORT AT STA. 8+97.04 OFFSET 37 FT

STRUCTURAL STEEL SIGN SUPPORT - BREAKAWAY							CONCRETE FOUNDATIONS	SIGN PANEL - TYPE 3	SIGN PANEL REMOVAL - TYPE 3
SIZE	NEAR POST		FAR POST		STUB POST (FT)	WEIGHT (POUND)			
	OFFSET (FT)	LENGTH (FT)	OFFSET (FT)	LENGTH (FT)			CU YD	SF	SF
W6X15	32.47	12.12	41.41	13.92	5	465.6	1.4	112	112

PHOTO COURTESY OF GOOGLE MAPS

ILLINOIS STANDARD
XM-2

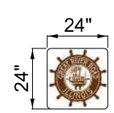

SIGN DETAIL
1:60

WIDTH x HGHT.	16'–0" x 7'–0"
BORDER WIDTH	1.75"
CORNER RADIUS	11"
MOUNTING	Ground
BACKGROUND	TYPE: Reflective – ZZ
	COLOR: Brown
LEGEND/BORDER	TYPE: Reflective – ZZ
	COLOR: White

SYMBOL	ROT	X	Y	WID	HT
AR_Type D	90	31.6	58	10	15
AR_Type D	270	161.6	16.9	10	15
IL STANDARD XM–2	0	10	9.8	24	24

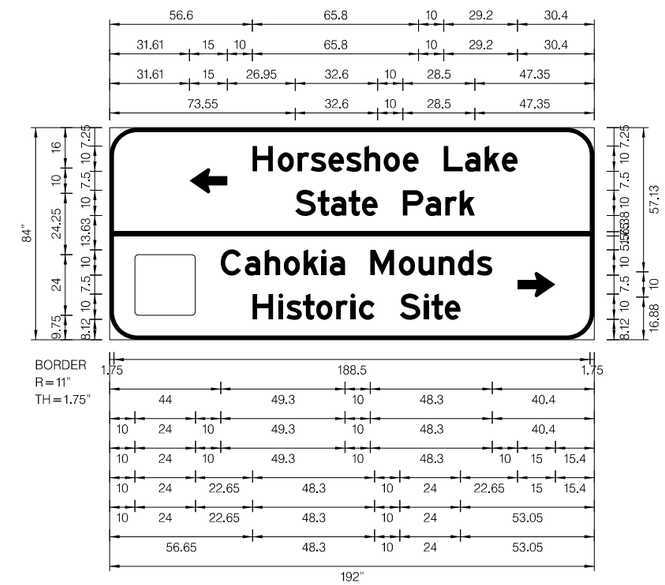

Dimensions are in inches.tenths

Letter locations are panel edge to lower left corner

LETTER POSITIONS (X)																		LENGTH	SERIES/SIZE
H	o	r	s	e	s	h	o	e	L	a	k	e							E 2000
56.6	66.6	74.5	79.7	86.7	93.7	101	108.6	116.2	132.4	140.8	148.6	155.4						105	10/7.5
S	t	a	t	e	P	a	r	k											E 2000
73.6	82.5	87.7	94.7	100	116.2	125.2	133	138.7										71.1	10/7.5
C	a	h	o	k	i	a	M	o	u	n	d	s							E 2000
44	53.6	61.4	69	76.9	84	87.2	103.3	114.6	122.4	130.4	138	145.5						107.6	10/7.5
H	i	s	t	o	r	i	c	S	i	t	e								E 2000
56.7	67	70.1	76.6	81.9	89.8	95.5	98.8	115	124.7	127.5	132.8							82.3	10/7.5

MODEL: $MODELNAMES
FILE NAME: D876E84-I5570-sht-SgnDH-82.dgn

ABNA DESIGN FIRM REG. 184.002117

USER NAME = jacobspw18ics04$	DESIGNED -	REVISED -
	DRAWN -	REVISED -
PLOT SCALE = 0.16666667 ' / in.	CHECKED -	REVISED -
PLOT DATE = 10/2/2025	DATE - 2025/10/03	REVISED -

STATE OF ILLINOIS
DEPARTMENT OF TRANSPORTATION

SIGN DETAILS

SCALE: NTS | SHEET 62 OF 73 SHEETS | STA. TO STA.

F.A.I. RTE.	SECTION	COUNTY	TOTAL SHEETS	SHEET NO.
70	Section82-(5,6)RS-2, 60-6RS-2	MADISON & ST. CLAIR	678	317

CONTRACT NO. 76E84

ILLINOIS | FED. AID PROJECT

STA. 11+45.71 RAMP 4 (IL 101 INTERCHANGE)
EXISTING GUIDE SIGN ON STRUCTURAL STEEL SIGN SUPPORT
PROPOSED GUIDE SIGN ON STRUCTURAL STEEL SIGN SUPPORT AT STA. 11+45.71 OFFSET 29 FT

STRUCTURAL STEEL SIGN SUPPORT - BREAKAWAY							CONCRETE FOUNDATIONS	SIGN PANEL - TYPE 3	SIGN PANEL REMOVAL - TYPE 3
SIZE	NEAR POST		FAR POST		STUB POST (FT)	WEIGHT (POUND)			
	OFFSET (FT)	LENGTH (FT)	OFFSET (FT)	LENGTH (FT)			CU YD	SF	SF
W10X26	24.48	18.62	32.62	20.92	6	1184.04	2.54	108.75	108.75

PHOTO COURTESY OF GOOGLE MAPS

SIGN DETAIL

1:60

WIDTH x HGHT.	14'-6" x 7'-6"	
BORDER WIDTH	2"	
CORNER RADIUS	12"	
MOUNTING	Ground	
BACKGROUND	TYPE:	Reflective – ZZ
	COLOR:	Green
LEGEND/BORDER	TYPE:	Reflective – ZZ
	COLOR:	White

SYMBOL	ROT	X	Y	WID	HT
AR_Type B	90	15.5	59.6	13.3	15.2
AR_Type B	270	152.1	17.1	13.3	15.2

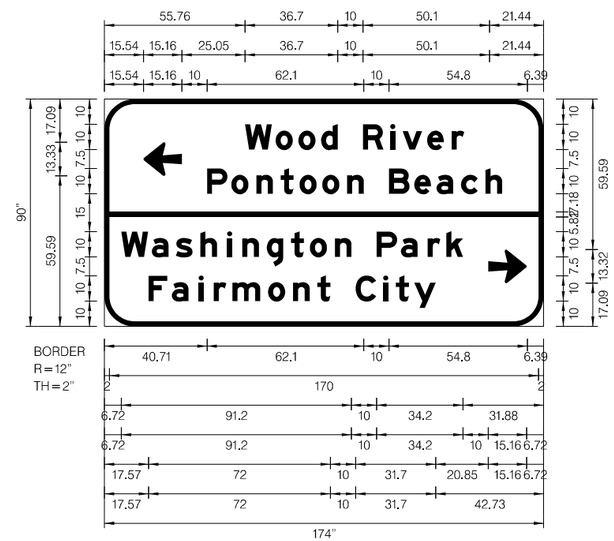

Dimensions are in inches.tenths

Letter locations are panel edge to lower left corner

LETTER POSITIONS (X)																		LENGTH	SERIES/SIZE
W	o	o	d	R	i	v	e	r											EM 2000
55.8	67.9	76.9	85.9	102.5	113.3	118.2	127.9	137.6	142.6									96.8	107.5
P	o	n	t	o	o	n	B	e	a	c	h								EM 2000
40.7	50.3	60.2	69.8	77.3	86.3	96.2	112.8	122.8	131.6	141.3	151	157.6						126.9	107.5
W	a	s	h	i	n	g	t	o	n	P	a	r	k						EM 2000
6.7	18.8	28.3	38	48.6	54.6	64.3	73.9	81.4	91.3	107.9	117.5	128.1	135.5					135.4	107.5
F	a	i	r	m	o	n	t	C	i	t	y								EM 2000
17.6	26.8	37.4	43.4	50.8	64.9	74.8	84.4	99.6	110.5	115.5	122.8							113.7	107.5

MODEL: $MODELNAMES
FILE NAME: D876E84-I5570-sht-SignDtl-63.dgn

ABNA DESIGN FIRM REG. 184.002117

USER NAME = jacobspw18lcs01$	DESIGNED -	REVISED -	
	DRAWN -	REVISED -	
PLOT SCALE = 0.16666667 ' / in.	CHECKED -	REVISED -	
PLOT DATE = 10/2/2025	DATE - 2025/10/03	REVISED -	

STATE OF ILLINOIS
DEPARTMENT OF TRANSPORTATION

SIGN DETAILS

SCALE: NTS | SHEET 63 OF 73 SHEETS | STA. | TO STA.

F.A.I. RTE.	SECTION	COUNTY	TOTAL SHEETS	SHEET NO.
70	Section82-(5,6)RS-2, 60-6RS-2	MADISON & ST. CLAIR	678	318

CONTRACT NO. 76E84

ILLINOIS | FED. AID PROJECT

STA. 13+96.25 RAMP 4 (IL 101 INTERCHANGE)
EXISTING GUIDE SIGN ON STRUCTURAL STEEL SIGN SUPPORT
PROPOSED GUIDE SIGN ON STRUCTURAL STEEL SIGN SUPPORT AT STA. 13+96.25 OFFSET 46 FT

STRUCTURAL STEEL SIGN SUPPORT - BREAKAWAY							CONCRETE FOUNDATIONS	SIGN PANEL - TYPE 3	SIGN PANEL REMOVAL - TYPE 3
SIZE	NEAR POST		FAR POST		STUB POST (FT)	WEIGHT (POUND)			
	OFFSET (FT)	LENGTH (FT)	OFFSET (FT)	LENGTH (FT)			CU YD	SF	SF
W10X22	42.98	18.31	49.06	19.79	6	970.2	2.36	120	120

PHOTO COURTESY OF GOOGLE MAPS

SIGN DETAIL
1:60

WIDTH x HGHT.	20'–0" x 6'–0"
BORDER WIDTH	2"
CORNER RADIUS	9"
MOUNTING	Ground
BACKGROUND	TYPE: Reflective – ZZ
	COLOR: Blue
LEGEND/BORDER	TYPE: Reflective – ZZ
	COLOR: White

SYMBOL	ROT	X	Y	WID	HT
AR_Type D	270	204	19	16	24
LOGO36X48	360	16	9	48	36
LOGO36X48	360	80	9	48	36
LOGO36X48	360	144	9	48	36

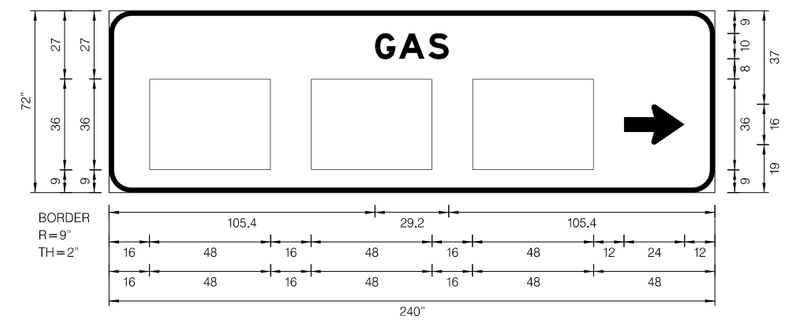

Dimensions are in inches.tenths

Letter locations are panel edge to lower left corner

LETTER POSITIONS (X)																		LENGTH	SERIES/SIZE
G	A	S																	EM 2000
105.4	114.9	126.5																29.2	10

MODEL: $MODELNAMES
FILE NAME: D876E84-I5570-alt-SgnDt-64.dgn

ABNA DESIGN FIRM REG. 184.002117

USER NAME = jacobspw18lcs04$	DESIGNED -	REVISED -
	DRAWN -	REVISED -
PLOT SCALE = 0.16666667 ' / in.	CHECKED -	REVISED -
PLOT DATE = 10/2/2025	DATE - 2025/10/03	REVISED -

STATE OF ILLINOIS
DEPARTMENT OF TRANSPORTATION

SIGN DETAILS

SCALE: NTS | SHEET 64 OF 73 SHEETS | STA. TO STA.

F.A.I. RTE.	SECTION	COUNTY	TOTAL SHEETS	SHEET NO.
70	Section82-(5,6)RS-2, 60-6RS-2	MADISON & ST. CLAIR	678	319

CONTRACT NO. 76E84

ILLINOIS | FED. AID PROJECT

STA. 15+90.00 RAMP 4 (IL 101 INTERCHANGE)
EXISTING GUIDE SIGN ON STRUCTURAL STEEL SIGN SUPPORT
PROPOSED GUIDE SIGN ON STRUCTURAL STEEL SIGN SUPPORT AT STA. 15+89.50 OFFSET -49.8 FT

STRUCTURAL STEEL SIGN SUPPORT - BREAKAWAY							CONCRETE FOUNDATIONS	SIGN PANEL - TYPE 3	SIGN PANEL REMOVAL - TYPE 3
SIZE	NEAR POST		FAR POST		STUB POST (FT)	WEIGHT (POUND)			
	OFFSET (FT)	LENGTH (FT)	OFFSET (FT)	LENGTH (FT)			CU YD	SF	SF
W12X26	-49.8	16.97	-49.8	17.43	6	888.8	2.36	142.5	95

PHOTO COURTESY OF GOOGLE MAPS

SIGN DETAIL
1:60

WIDTH x HGHT.	15'-0" x 9'-6"
BORDER WIDTH	2"
CORNER RADIUS	12"
MOUNTING	Ground
BACKGROUND	TYPE: Reflective – ZZ
	COLOR: Green
LEGEND/BORDER	TYPE: Reflective – ZZ
	COLOR: White

SYMBOL	ROT	X	Y	WID	HT
M1_1	0	50.7	58	24	24
M1_1	0	104.7	58	24	24
M1_4	0	140.7	58	24	24
AR_Type B	90	10.9	36.7	20	22.8

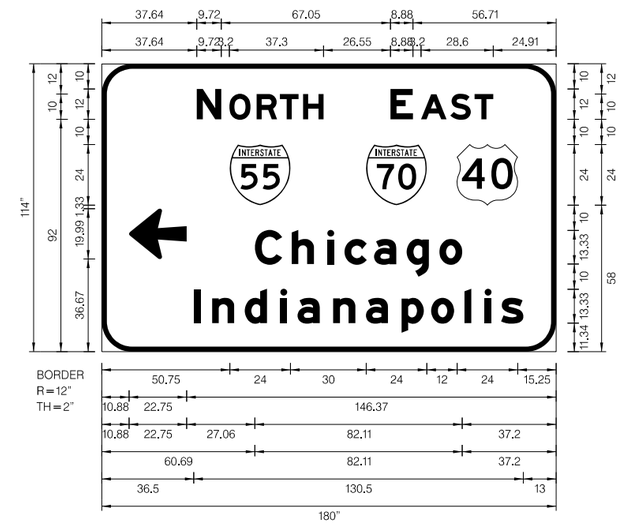

Dimensions are in inches.tenths

Letter locations are panel edge to lower left corner

LETTER POSITIONS (X)																		LENGTH	SERIES/SIZE
N	O	R	T	H															EM 2000
37.6	50.6	61.4	70.6	79.8														50.2	12,10
E	A	S	T																EM 2000
114.4	126.5	138.1	147.7															40.7	12,10
C	h	i	c	a	g	o													EM 2000
60.7	75.2	89.4	96.2	107.9	120.8	133.7												82.1	13.3/10
I	n	d	i	a	n	a	p	o	l	i	s								EM 2000
36.5	43.7	56.6	70.8	77.6	91.7	104.6	118.7	130.5	143.7	151.7	158.2							130.5	13.3/10

MODEL: $MODELNAME$
FILE NAME: D876E84-I5570-sht-SignDtl-65.dgn

ABNA DESIGN FIRM REG. 184.002117

USER NAME = jacobspw18ics04$	DESIGNED -	REVISED -	
	DRAWN -	REVISED -	
PLOT SCALE = 0.16666667 ' / in.	CHECKED -	REVISED -	
PLOT DATE = 10/2/2025	DATE - 2025/10/03	REVISED -	

STATE OF ILLINOIS
DEPARTMENT OF TRANSPORTATION

SIGN DETAILS

SCALE: NTS | SHEET 65 OF 73 SHEETS | STA. TO STA.

F.A.I. RTE.	SECTION	COUNTY	TOTAL SHEETS	SHEET NO.
70	Section82-(5,6)RS-2, 60-6RS-2	MADISON & ST. CLAIR	678	320

CONTRACT NO. 76E84

ILLINOIS | FED. AID PROJECT

STA. 0+66.63 RAMP 3 (IL 101 INTERCHANGE)
EXISTING GUIDE SIGN ON STRUCTURAL STEEL SIGN SUPPORT
PROPOSED GUIDE SIGN ON STRUCTURAL STEEL SIGN SUPPORT AT STA. 0+62.63 OFFSET 97 FT

STRUCTURAL STEEL SIGN SUPPORT - BREAKAWAY							CONCRETE FOUNDATIONS	SIGN PANEL - TYPE 3	SIGN PANEL REMOVAL - TYPE 3
SIZE	NEAR POST		FAR POST		STUB POST (FT)	WEIGHT (POUND)			
	OFFSET (FT)	LENGTH (FT)	OFFSET (FT)	LENGTH (FT)			CU YD	SF	SF
W16X45	97.5	25.27	97.8	27.58	7	2693.25	4.46	280.5	195

ILLINOIS STANDARD
XM-2

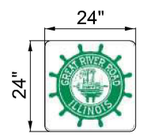

PHOTO COURTESY OF GOOGLE MAPS

SIGN DETAIL
1:60

SYMBOL	ROT	X	Y	WID	HT
M1_1	0	42	148	24	24
IL STANDARD XM-2	0	78	148	24	24
M1_1	0	126	148	24	24
M1_4	0	162	148	24	24
AR_Type A	0	12.1	134.3	17.8	28
M1_1	0	29.3	58	24	24
M1_1	0	83.3	58	24	24
M1_4	0	119.3	58	24	24
AR_Type B	270	160.4	36.7	20	22.8

WIDTH x HGHT.	16'-6" x 17'-0"	
BORDER WIDTH	2"	
CORNER RADIUS	12"	
MOUNTING	Ground	
BACKGROUND	TYPE:	Reflective – ZZ
	COLOR:	Green
LEGEND/BORDER	TYPE:	Reflective – ZZ
	COLOR:	White

Dimensions are in inches.tenths

Letter locations are panel edge to lower left corner

LETTER POSITIONS (X)																			LENGTH	SERIES/SIZE
S	O	U	T	H		W	E	S	T											EM 2000
46.5	59.5	70.3	80.2	89.4		134.9	150.9	160.1	169.7										50.9, 42.1	12,10
S	t	L	o	u	i	s														EM 2000
69.9	83.5	103.8	115.4	128.6	142.8	149.3													88.2	13.3/10
N	O	R	T	H																EM 2000
16.1	29.1	39.9	49.1	58.3															50.2	12,10
E	A	S	T																	EM 2000
92.9	105	116.6	126.2																40.7	12,10
C	h	i	c	a	g	o														EM 2000
39.2	53.7	67.9	74.7	86.4	99.3	112.2													82.1	13.3/10
I	n	d	i	a	n	a	p	o	l	i	s									EM 2000
15	22.2	35.1	49.3	56.1	70.2	83.1	97.2	109	122.2	130.2	136.7								130.5	13.3/10

MODEL: $MODELNAMES
FILE NAME: D876E84-I5570-ant-SignDt-66.dgn

ABNA DESIGN FIRM REG. 184.002117

USER NAME = jacobspw18lcs01$	DESIGNED -	REVISED -
	DRAWN -	REVISED -
PLOT SCALE = 0.16666667 ' / in.	CHECKED -	REVISED -
PLOT DATE = 10/2/2025	DATE - 2025/10/03	REVISED -

STATE OF ILLINOIS
DEPARTMENT OF TRANSPORTATION

SIGN DETAILS

SCALE: NTS | SHEET 66 OF 73 SHEETS | STA. | TO STA.

F.A.I. RTE.	SECTION	COUNTY	TOTAL SHEETS	SHEET NO.
70	Section82-(5,6)RS-2, 60-6RS-2	MADISON & ST. CLAIR	678	321

CONTRACT NO. 76E84

ILLINOIS | FED. AID PROJECT

STA. 0+39.61 RAMP 1 (IL 101 INTERCHANGE)
EXISTING GUIDE SIGN ON STRUCTURAL STEEL SIGN SUPPORT
PROPOSED GUIDE SIGN ON STRUCTURAL STEEL SIGN SUPPORT AT STA. 0+40.0 OFFSET 96 FT

STRUCTURAL STEEL SIGN SUPPORT - BREAKAWAY							CONCRETE FOUNDATIONS	SIGN PANEL - TYPE 3	SIGN PANEL REMOVAL - TYPE 3
SIZE	NEAR POST		FAR POST		STUB POST (FT)	WEIGHT (POUND)			
	OFFSET (FT)	LENGTH (FT)	OFFSET (FT)	LENGTH (FT)			CU YD	SF	SF
W16X45	95.27	25.64	98.8	27.94	7	2726.1	4.46	280.5	202.5

ILLINOIS STANDARD
XM-2

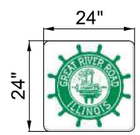

PHOTO COURTESY OF GOOGLE MAPS

SIGN DETAIL
1:60

SYMBOL	ROT	X	Y	WID	HT
M1_1	0	69.8	148	24	24
M1_1	0	123.8	148	24	24
M1_4	0	159.8	148	24	24
AR_Type A	0	18.9	126.7	17.8	28
M1_1	0	10	34	24	24
IL STANDARD XM–2	0	46	34	24	24
M1_1	0	94	34	24	24
M1_4	0	130	34	24	24
AR_Type B	270	164.6	24.3	20	22.8

WIDTH x HGHT.	16'–6" x 17'–0"	
BORDER WIDTH	2"	
CORNER RADIUS	12"	
MOUNTING	Ground	
BACKGROUND	TYPE:	Reflective – ZZ
	COLOR:	Green
LEGEND/BORDER	TYPE:	Reflective – ZZ
	COLOR:	White

Dimensions are in inches.tenths

Letter locations are panel edge to lower left corner

LETTER POSITIONS (X)																			LENGTH	SERIES/SIZE
N	O	R	T	H		E	A	S	T											EM 2000
56.6	69.6	80.4	89.6	98.8		133.4	145.5	157.1	166.7										50.2, 40.7	12,10
C	h	i	c	a	g	o														EM 2000
79.7	94.2	108.4	115.2	126.9	139.8	152.7													82.1	13.3/10
I	n	d	i	a	n	a	p	o	l	i	s									EM 2000
55.5	62.7	75.6	89.8	96.6	110.7	123.6	137.7	149.5	162.7	170.7	177.2								130.5	13.3/10
S	O	U	T	H																EM 2000
14.5	27.5	38.3	48.2	57.4															50.9	12,10
W	E	S	T																	EM 2000
102.9	118.9	128.1	137.7																42.1	12,10
S	t	L	o	u	i	s														EM 2000
37.9	51.5	71.8	83.4	96.6	110.8	117.3													88.2	13.3/10

MODEL: $MODELNAME$
FILE NAME: D876E84-I5570-sht-SgnDtl-67.dgn

ABNA DESIGN FIRM REG. 184.002117

USER NAME = jacobspw18lcs01$	DESIGNED -	REVISED -
	DRAWN -	REVISED -
PLOT SCALE = 0.16666667 ' / in.	CHECKED -	REVISED -
PLOT DATE = 10/2/2025	DATE - 2025/10/03	REVISED -

STATE OF ILLINOIS
DEPARTMENT OF TRANSPORTATION

SIGN DETAILS

SCALE: NTS | SHEET 67 OF 73 SHEETS | STA. | TO STA.

F.A.I. RTE.	SECTION	COUNTY	TOTAL SHEETS	SHEET NO.
70	Section82-(5,6)RS-2, 60-6RS-2	MADISON & ST. CLAIR	678	322

CONTRACT NO. 76E84

ILLINOIS | FED. AID PROJECT

STA. 12+47.93 RAMP 2 (IL 101 INTERCHANGE)
EXISTING GUIDE SIGN ON STRUCTURAL STEEL SIGN SUPPORT
PROPOSED GUIDE SIGN ON STRUCTURAL STEEL SIGN SUPPORT AT STA. 12+48.00 OFFSET -35.9 FT

STRUCTURAL STEEL SIGN SUPPORT - BREAKAWAY							CONCRETE FOUNDATIONS	SIGN PANEL - TYPE 3	SIGN PANEL REMOVAL - TYPE 3
SIZE	NEAR POST		FAR POST		STUB POST (FT)	WEIGHT (POUND)			
	OFFSET (FT)	LENGTH (FT)	OFFSET (FT)	LENGTH (FT)			CU YD	SF	SF
W8X18	-35.9	16.16	-35.8	16.21	5	672.66	1.4	120	93.75

ILLINOIS STANDARD
XM-2

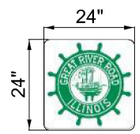

PHOTO COURTESY OF GOOGLE MAPS

SIGN DETAIL
1:60

WIDTH x HGHT.	16'-0" x 7'-6"	
BORDER WIDTH	2"	
CORNER RADIUS	12"	
MOUNTING	Ground	
BACKGROUND	TYPE:	Reflective – ZZ
	COLOR:	Green
LEGEND/BORDER	TYPE:	Reflective – ZZ
	COLOR:	White

SYMBOL	ROT	X	Y	WID	HT
M1_1	0	38.1	34	24	24
IL STANDARD XM-2	0	74.1	34	24	24
M1_1	0	122.1	34	24	24
M1_4	0	158.1	34	24	24
AR_Type B	90	9.9	11.9	20	22.8

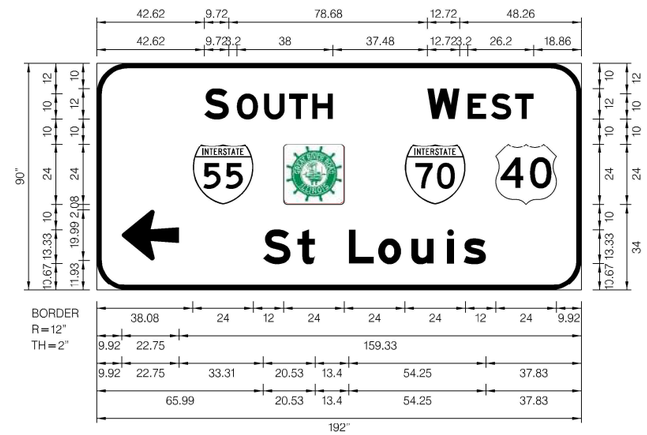

Dimensions are in inches.tenths

Letter locations are panel edge to lower left corner

LETTER POSITIONS (X)																		LENGTH	SERIES/SIZE
S	O	U	T	H															EM 2000
42.6	55.5	66.3	76.2	85.4														50.9	12,10
W	E	S	T																EM 2000
131	146.9	156.1	165.7															42.1	12,10
S	t	L	o	u	i	s													EM 2000
66	79.6	99.9	111.5	124.7	138.8	145.4												88.2	13.3/10

MODEL: $MODELNAMES
FILE NAME: D876E84-I5570-sht-SgnDtl-68.dgn

ABNA DESIGN FIRM REG. 184.002117

USER NAME = jacobspw18ics01$	DESIGNED -	REVISED -	
	DRAWN -	REVISED -	
PLOT SCALE = 0.16666667 ' / In.	CHECKED -	REVISED -	
PLOT DATE = 10/2/2025	DATE - 2025/10/03	REVISED -	

STATE OF ILLINOIS
DEPARTMENT OF TRANSPORTATION

SIGN DETAILS

SCALE: NTS | SHEET 68 OF 73 SHEETS | STA. | TO STA.

F.A.I. RTE.	SECTION	COUNTY	TOTAL SHEETS	SHEET NO.
70	Section82-(5,6)RS-2, 60-6RS-2	MADISON & ST. CLAIR	678	323

CONTRACT NO. 76E84
ILLINOIS | FED. AID PROJECT

MUTCD (2023) TABLE 2E-1 SIZE OF STANDARD SIGN E5-1a (EXIT GORE)

Sign or Plaque	Sign Designation	Section	Minimum Size
Exit Gore (with exit number)			
1-, 2-Digit Exit Number	E5-1a	2E.26	78 x 60
3-Digit Exit Number	E5-1a	2E.26	96 x 60
1-Digit Exit Number (with single-letter suffix)	E5-1a	2E.26	90 x 60
2-Digit Exit Number (with single-letter suffix)	E5-1a	2E.26	108 x 60
3-Digit Exit Number (with single-letter suffix)	E5-1a	2E.26	126 x 60
1-Digit Exit Number (with dual-letter suffix)	E5-1a	2E.26	120 x 60
2-Digit Exit Number (with dual-letter suffix)	E5-1a	2E.26	138 x 60
3-Digit Exit Number (with dual-letter suffix)	E5-1a	2E.26	156 x 60

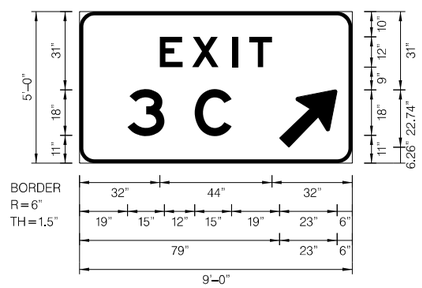

STA 66+64.34

STA. 66+64.34 FAI-55 70
EXISTING STANDARD SIGN ON
WOOD SIGN SUPPORT
PROPOSED STANDARD SIGN E5-1a
ON WOOD SIGN SUPPORT AT
STA 66+64.34 OFFSET -103 FT

SIGN PANEL REMOVAL - TYPE 3, 45 SF
SIGN PANEL - TYPE 3, 45 SF

STA. A 256+14.66 FAI-55 70
EXISTING GUIDE SIGN ON
STRUCTURAL WOOD SIGN SUPPORT
PROPOSED GUIDE SIGN E5-1a ON
STRUCTURAL WOOD SIGN SUPPORT
AT STA. A 256+14.66 OFFSET 74 FT

SIGN PANEL REMOVAL - TYPE 3, 32.50 SF
SIGN PANEL - TYPE 3, 32.50 SF

STA. 6+46.39 RAMP 2
(IL 101 INTERCHANGE)
EXISTING GUIDE SIGN ON
WOOD SIGN SUPPORT
PROPOSED GUIDE SIGN ON
WOOD SUPPORT AT
STA 6+46.39 OFFSET -26 FT

SIGN PANEL REMOVAL - TYPE 3, 32.5 SF
SIGN PANEL - TYPE 3, 32.5 SF

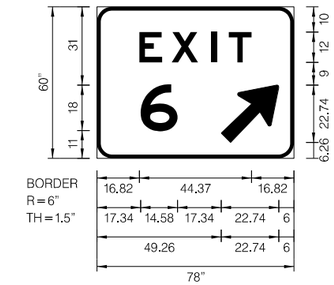

STA 6+46.39 &
STA. A 256+14.66

PROPOSED STANDARD SIGN E5-1a ON WOOD SIGN
SUPPORT AT STA 94+92.14 OFFSET 56 FT

SIGN PANEL REMOVAL - TYPE 3, 32.5 SF
SIGN PANEL - TYPE 3, 32.5 SF

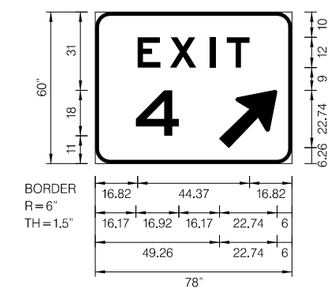

STA 94+92.14

PROPOSED STANDARD SIGN E5-1a ON WOOD
SIGN SUPPORT AT STA 111+86.76 OFFSET -35 FT

SIGN PANEL REMOVAL - TYPE 3, 45 SF
SIGN PANEL - TYPE 3, 45 SF

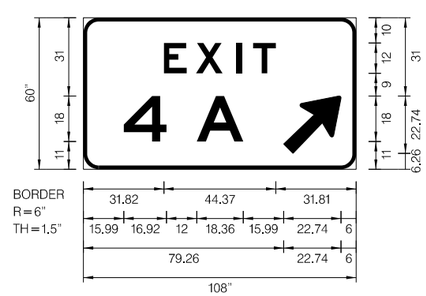

STA 111+86.76

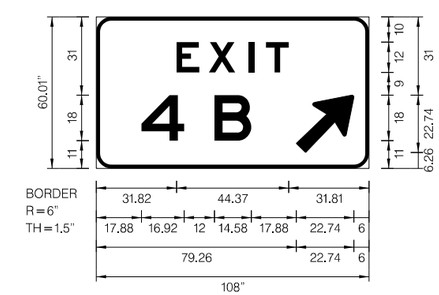

STA 128+04.78

PROPOSED STANDARD SIGN E5-1a ON WOOD SIGN
SUPPORT AT STA 128+04.78 OFFSET -72 FT

SIGN PANEL REMOVAL - TYPE 3, 45 SF
SIGN PANEL - TYPE 3, 45 SF

MODEL: $MODELNAMES
FILE NAME: D876E84-I5570-sht-SgnDtl-69.dgn

ABNA DESIGN FIRM REG. 184.002117

USER NAME = jacobspw18lcs01$	DESIGNED -	REVISED -	
	DRAWN -	REVISED -	
PLOT SCALE = 0.16666667 ' / in.	CHECKED -	REVISED -	
PLOT DATE = 10/2/2025	DATE - 2025/10/03	REVISED -	

STATE OF ILLINOIS
DEPARTMENT OF TRANSPORTATION

SIGN DETAILS

SCALE: NTS | SHEET 69 OF 73 SHEETS | STA. | TO STA.

F.A.I. RTE.	SECTION	COUNTY	TOTAL SHEETS	SHEET NO.
70	Section82-(5,6)RS-2, 60-6RS-2	MADISON & ST. CLAIR	678	324

CONTRACT NO. 76E84
ILLINOIS | FED. AID PROJECT

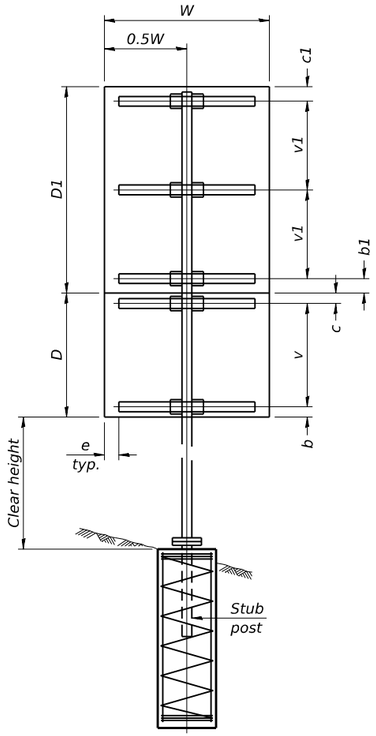

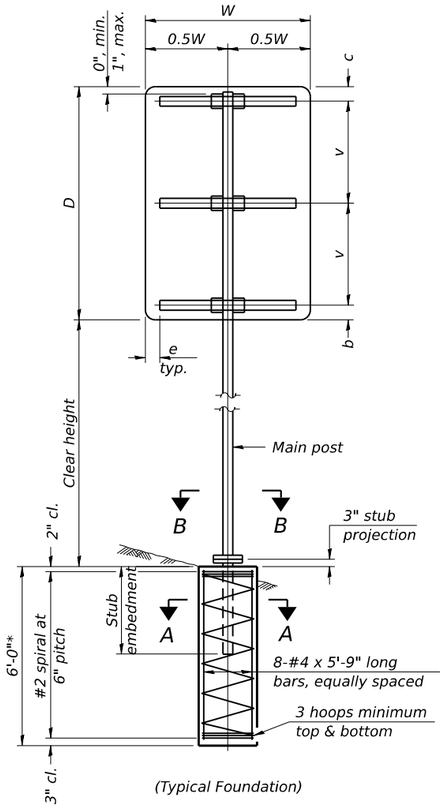

(Typical Foundation)

SINGLE POST ASSEMBLY EXAMPLES

* Dimensional changes required for varying site conditions shall be approved by the Engineer.

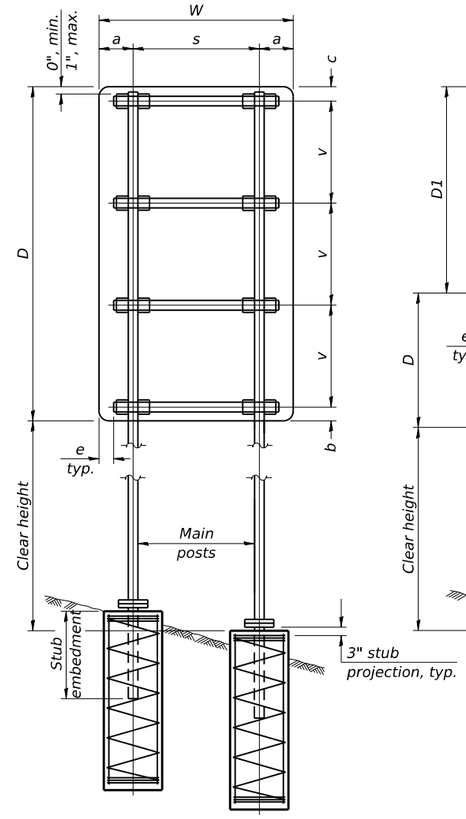

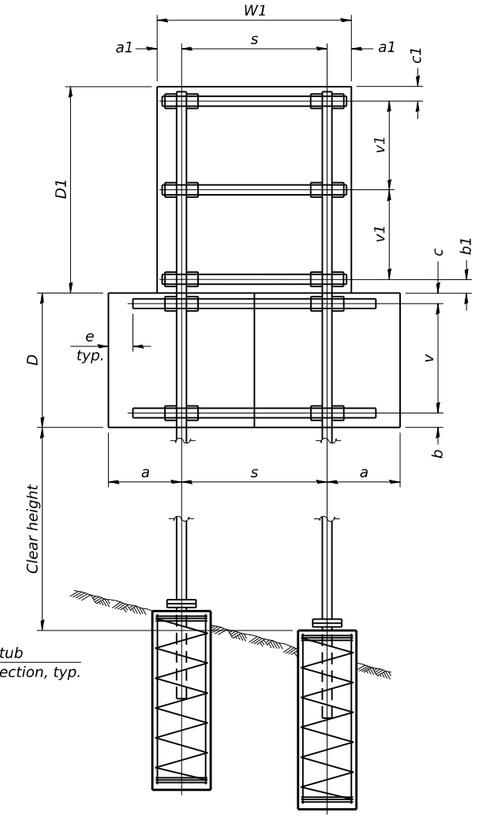

DUAL POST ASSEMBLY EXAMPLES

a or a1 = 6" min. to 2'-0" max. (Approximately 0.2W or 0.2W_1)
b or b1 = 3" min. to 4" max
c or c1 = 3" min. to 4" max
e = 0" min. to 6" max
s = 3'-0" min. to 6'-0" max. (Approximately 0.6W or 0.6W_1)
v or v1 = 2'-0" min. to 2'-11" max.

MAIN POST STEEL TUBING	WEIGHT PER FOOT (POUND)	STUB POST TABLE		MAIN POST TABLE				
		Stub Embedment	Stub Post Length	Bolt Size	A	t	R	Bolt Circle
3" x 2" x 1/4"	7.11	2'-0"	2'-3"	1/2" x 2 3/4"	8 1/4"	5/8"	9/32"	6 1/2"
4" x 2" x 1/4"	8.81	2'-0"	2'-3"	1/2" x 2 3/4"	8 1/4"	5/8"	9/32"	6 1/2"
4" x 3" x 1/4"	10.51	2'-3"	2'-6"	5/8" x 3 1/4"	10"	3/4"	11/32"	8"
5" x 3" x 1/4"	12.21	2'-3"	2'-6"	5/8" x 3 1/4"	10"	3/4"	11/32"	8"
6" x 3" x 1/4"	13.91	2'-3"	2'-6"	5/8" x 3 1/4"	11 1/2"	3/4"	11/32"	9 1/2"
6" x 4" x 1/4"	15.62	2'-3"	2'-6"	3/4" x 3 1/2"	11 1/2"	3/4"	13/32"	9 1/2"
6" x 4" x 5/16"	19.08	2'-3"	2'-6"	3/4" x 3 1/2"	11 1/2"	3/4"	13/32"	9 1/2"
7" x 5" x 1/4"	19.02	2'-6"	2'-9"	3/4" x 3 1/2"	1'-2"	3/4"	13/32"	1'-0"
8" x 4" x 1/4"	19.02	2'-6"	2'-9"	3/4" x 3 1/2"	1'-2"	3/4"	13/32"	1'-0"
8" x 6" x 1/4"	22.42	2'-6"	2'-9"	7/8" x 3 1/2"	1'-2"	3/4"	15/32"	1'-0"

GENERAL NOTES

Posts shall be plumbed by using shims with post-to-stub post connection bolts snug tight only. Final tightening of all High Strength Bolts shall be in accordance with Article 727.05 and threads at the junction of the bolt and nut shall be burred or center punched to prevent the nut from loosening.

One foundation requires 0.7 cubic yards of concrete and 46 pounds of reinforcement bars and spiral hoops.

LOADING: 80 mph wind with 30% gust factor, normal to sign.

DESIGN STRESSES:
Structural steel - 20,000 psi
Reinforcing steel - 20,000 psi
Concrete - 1,400 psi
Footing soil pressure - 2,000 psf

After fabrication, the post, fuse plate, base plate and upper 6", min. of the stub post shall be hot-dip galvanized in accordance with AASHTO M111. All bolts, nuts and washers shall be hot-dip galvanized in accordance with AASHTO M232.

For Sections A-A and B-B, see Base Sheet BAT-A-2.

FOUNDATIONS:
All necessary excavation or drilling (except in rock); backfilling with excavated material; disposal of unsuitable or surplus material; formwork; and furnishing and placing the Class SI Concrete and reinforcement bars, shall be included in the pay item used for foundations.

The measurement of the tubular steel shall be computed on the basis of the weight per foot of the support, multiplied by the combined length of the main posts and stub posts.

BAT-A-1 5-15-2023

BREAK-AWAY TUBULAR STEEL SIGN POSTS AND FOUNDATIONS
(Sheet 1 of 2)

MODEL: $MODELNAMES
FILE NAME: D876E84-I5570-sIn-SignDlt-70.dgn

ABNA DESIGN FIRM REG. 184.002117

USER NAME = jacobspw18ics01$	DESIGNED -	REVISED -
	DRAWN -	REVISED -
PLOT SCALE = 0.16666667 ' / in.	CHECKED -	REVISED -
PLOT DATE = 10/2/2025	DATE - 2025/10/03	REVISED -

STATE OF ILLINOIS
DEPARTMENT OF TRANSPORTATION

SIGN DETAILS

SCALE: NTS | SHEET 70 OF 73 SHEETS | STA. TO STA.

F.A.I. RTE.	SECTION	COUNTY	TOTAL SHEETS	SHEET NO.
70	Section82-(5,6)RS-2, 60-6RS-2	MADISON & ST. CLAIR	678	325

CONTRACT NO. 76E84
ILLINOIS | FED. AID PROJECT

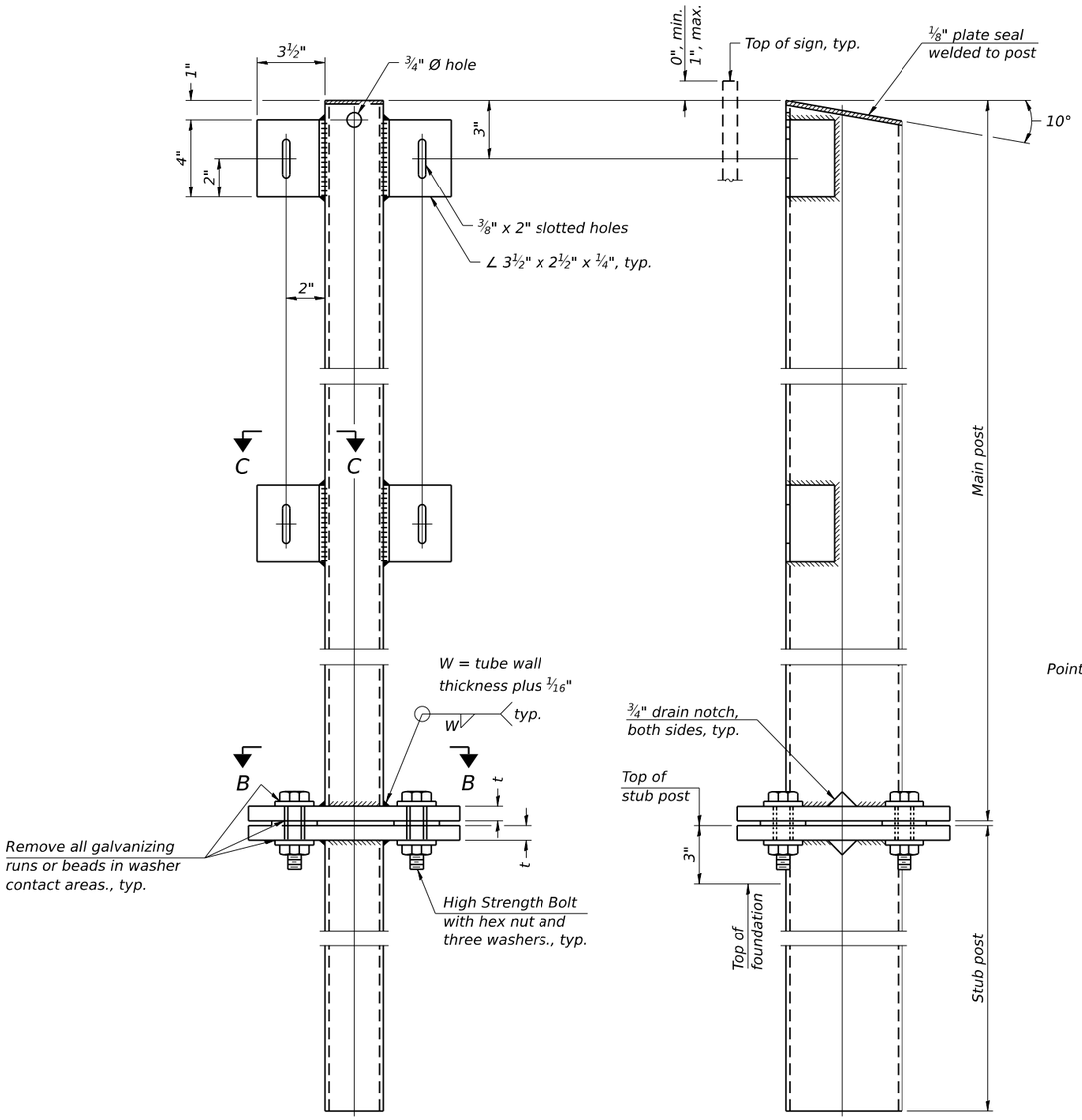

FRONT ELEVATION

SIDE ELEVATION

MAIN POST & STUB POST

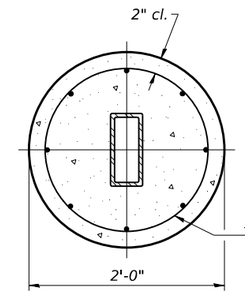

SECTION A-A
(CAST-IN-PLACE)

OR

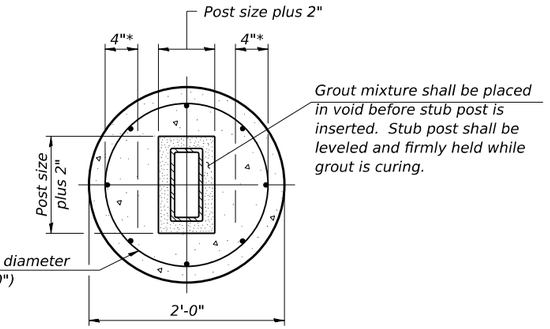

SECTION A-A
(PRECAST)

* Hot dip galvanized lifting loops or inserts may be placed in precast foundation inside the spiral reinforcement but not within 6" of the long axis of the post. Inserts must be adequate for safely lifting a total of 3,000 pounds and must not interfere with installation of the stub post or proper functioning of the slip base.

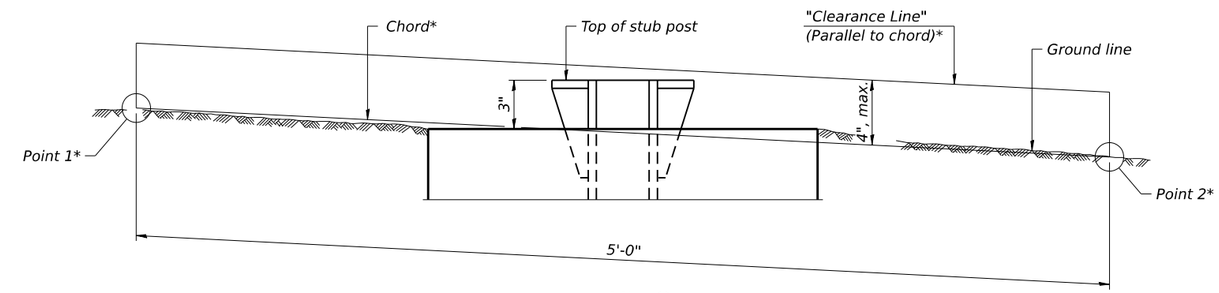

ELEVATION
GROUND LINE & STUB POST

* For all "Point 1" and "Point 2" locations, "Clearance Line" must be at or above top of stub post.

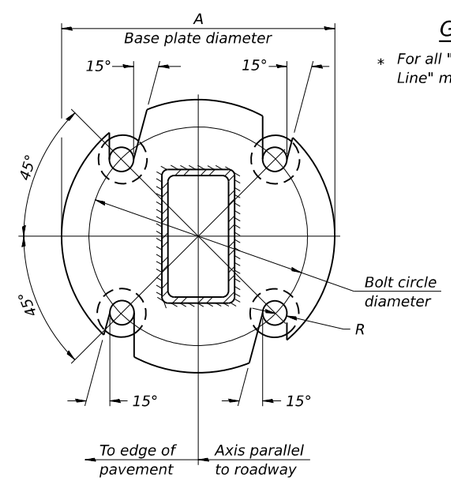

SECTION B-B

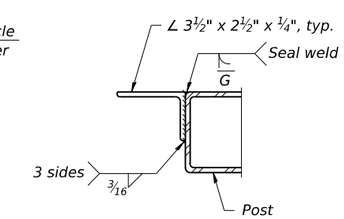

SECTION C-C
Weld continuously around corners.

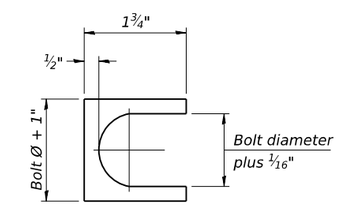

SHIM DETAIL

Furnish two 0.01" thick and two 0.03" thick stainless steel or brass (ASTM B36) shims per post.

BREAK-AWAY TUBULAR STEEL
SIGN POSTS AND FOUNDATIONS
(Sheet 2 of 2)

BAT-A-2 5-15-2023

MODEL: $MODELNAME$
FILE NAME: D876E84-15570-sht-SignDt-71.dgn

ABNA DESIGN FIRM REG. 184.002117

USER NAME = jacobspw18ics04$	DESIGNED -	REVISED -
	DRAWN -	REVISED -
PLOT SCALE = 0.16666667 ' / in.	CHECKED -	REVISED -
PLOT DATE = 10/2/2025	DATE - 2025/10/03	REVISED -

STATE OF ILLINOIS
DEPARTMENT OF TRANSPORTATION

SIGN DETAILS

SCALE: NTS | SHEET 71 OF 73 SHEETS | STA. | TO STA.

F.A.I. RTE.	SECTION	COUNTY	TOTAL SHEETS	SHEET NO.
70	Section82-(5,6)RS-2, 60-6RS-2	MADISON & ST. CLAIR	678	326
		CONTRACT NO. 76E84		
		ILLINOIS	FED. AID PROJECT	

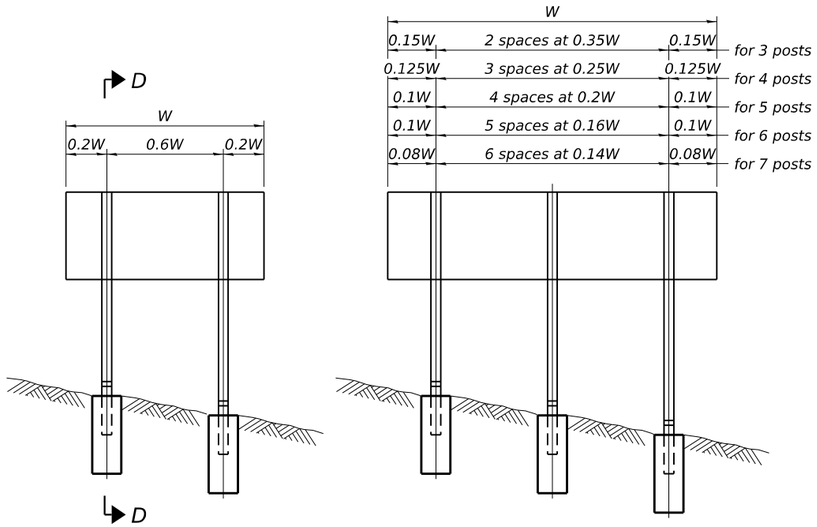

ELEVATION

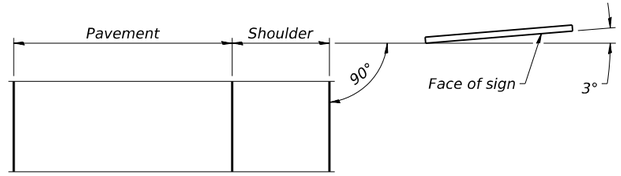

LOCATION SKETCH

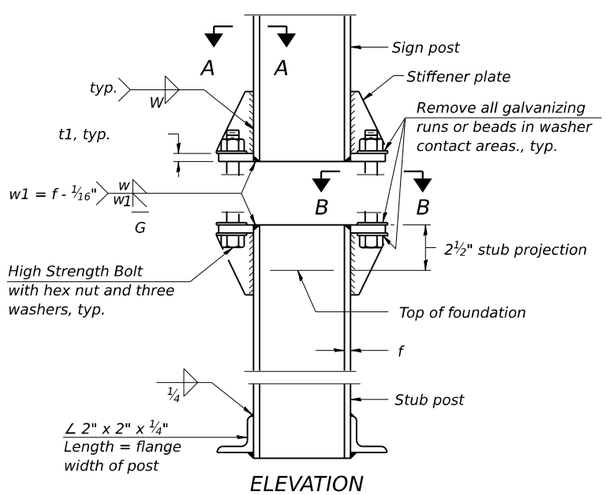

ELEVATION
SIGN POST & STUB POST

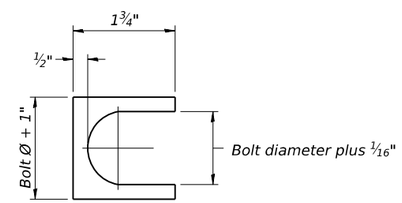

SHIM DETAIL

Furnish two 0.01" thick and two 0.03" thick stainless steel or brass (ASTM B36) shims per post.

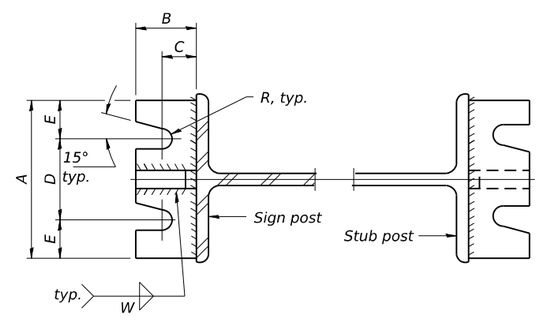

SECTION A-A

SECTION B-B

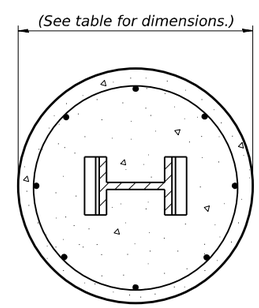

SECTION C-C

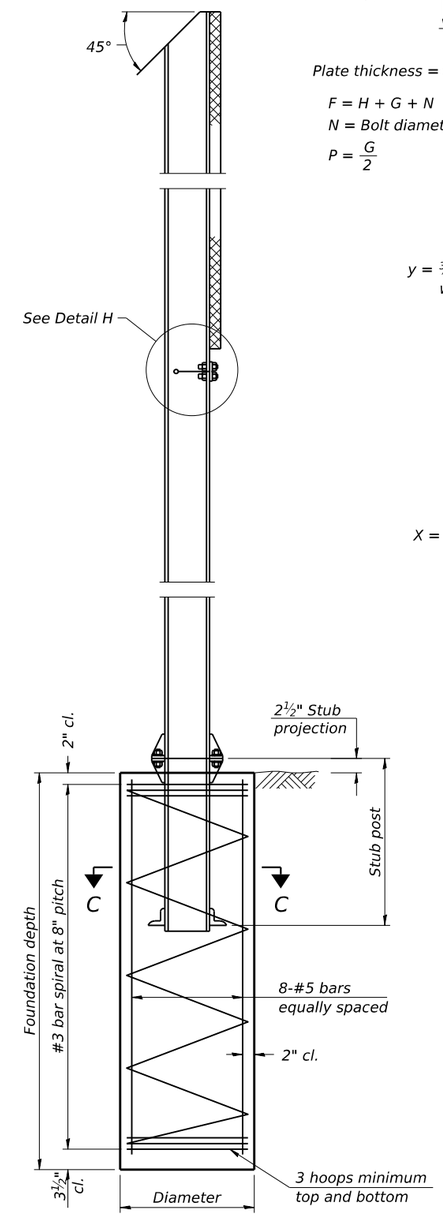

SECTION D-D

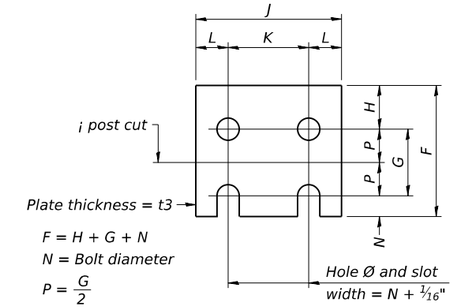

FUSE PLATE DETAIL
(Install with notches down.)

FUSE PLATE DATA		
N = Bolt Diameter	G	H
½"	2"	1⅛"
⅝"	2¼"	1¼"
¾"	2½"	1⅜"
⅞"	2¾"	1½"
1"	3"	1⅝"
1⅛"	3¼"	1¾"
1¼"	3½"	1⅞"

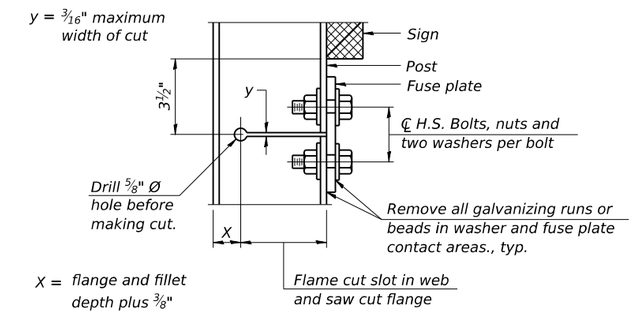

DETAIL H

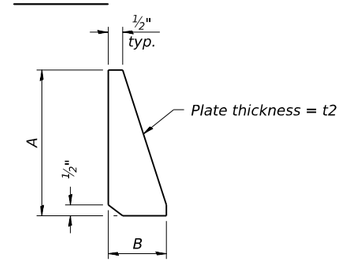

STIFFENER PLATE DETAIL
Diameter

GENERAL NOTES

Posts shall be plumbed by using shims with post-to-stub post connection bolts snug tight only. Final tightening of all High Strength Bolts shall be in accordance with Article 727.05 and threads at the junction of the bolt and nut shall be burred or center punched to prevent the nut from loosening.

LOADING: 80 m.p.h. wind with 30% gust factor, normal to sign.

DESIGN STRESSES:
Structural steel - 20,000 p.s.i.
Reinforcing steel - 20,000 p.s.i.
Concrete - 1,400 p.s.i.
Footing soil pressure - 2,000 p.s.f.

After fabrication, the post, fuse plate and upper 6", min. of the stub post shall be hot-dip galvanized in accordance with AASHTO M111. All bolts, nuts and washers shall be hot-dip galvanized in accordance with AASHTO M232.

BREAK-AWAY WIDE FLANGE STEEL SIGN POST DETAILS *Work this sheet with Base Sheet BAW-A-2.*
(Sheet 1 of 2)

BAW-A-1 5-15-2023

MODEL: $MODELNAMES
FILE NAME: D876E84-15570-sht-SgnDtl-72.dgn

ABNA DESIGN FIRM REG. 184.002117

USER NAME = jacobspw18ics01$	DESIGNED -	REVISED -
	DRAWN -	REVISED -
PLOT SCALE = 0.16666667 ' / in.	CHECKED -	REVISED -
PLOT DATE = 10/2/2025	DATE - 2025/10/03	REVISED -

STATE OF ILLINOIS
DEPARTMENT OF TRANSPORTATION

SIGN DETAILS

SCALE: NTS | SHEET 72 OF 73 SHEETS | STA. | TO STA.

F.A.I. RTE.	SECTION	COUNTY	TOTAL SHEETS	SHEET NO.
70	Section82-(5,6)RS-2, 60-6RS-2	MADISON & ST. CLAIR	678	327

CONTRACT NO. 76E84
ILLINOIS | FED. AID PROJECT

POST	CONCRETE FOUNDATION TABLE								POST TO STUB POST CONNECTION DATA										FUSE PLATE DATA			
	Foundation			Reinforcement				Stub Post														
	Diameter	*Minimum Depth	Concrete (1) cu. yds.)	Vertical Bars Length	Bar Spirals Diameter	Bar Spirals Length	lbs. (2)	Length	Bolt Size	A	B	C	D	E	t1	t2	R	W	J	K	L	t3
W6x9	2'-0"	6'-0"	0.70	5'-9"	1'-8½"	79'-0"	78	2'-3"	⅝" x 3¼"	6"	2¼"	1¼"	3½"	1¼"	¾"	½"	11/32"	¼"	4"	2¼"	⅞"	¼"
W6x15	2'-0"	6'-0"	0.70	5'-9"	1'-8½"	79'-0"	78	2'-6"	⅝" x 3¼"	6"	2¼"	1¼"	3½"	1¼"	¾"	½"	11/32"	¼"	6"	3½"	1¼"	⅜"
W8x18	2'-0"	6'-0"	0.70	5'-9"	1'-8½"	79'-0"	78	2'-6"	¾" x 3¾"	6"	2½"	1⅜"	3¼"	1⅜"	1"	½"	13/32"	5/16"	5¼"	2¾"	1¼"	⅜"
W10x22	2'-6"	6'-6"	1.18	6'-3"	2'-2½"	105'-0"	92	3'-0"	¾" x 3¾"	6"	2½"	1⅜"	3¼"	1⅜"	1"	½"	13/32"	5/16"	5¾"	2¾"	1½"	½"
W10x26	2'-6"	7'-0"	1.27	6'-9"	2'-2½"	112'-0"	98	3'-0"	⅞" x 4"	7"	2¾"	1½"	4"	1½"	1"	¾"	15/32"	⅜"	5¾"	2¾"	1½"	⅝"
W12x26	2'-6"	7'-9"	1.41	7'-6"	2'-2½"	119'-0"	107	3'-0"	⅞" x 4"	7"	2¾"	1½"	4"	1½"	1"	¾"	15/32"	⅜"	6½"	3½"	1½"	⅝"
W14x30	3'-0"	7'-3"	1.90	7'-0"	2'-8½"	145'-0"	113	3'-0"	⅞" x 4"	7"	2¾"	1½"	4"	1½"	1"	¾"	15/32"	⅜"	6¾"	3½"	1⅝"	½"
W14x38	3'-0"	8'-0"	2.09	7'-9"	2'-8½"	153'-0"	122	3'-6"	1" x 4½"	7½"	3"	1¾"	4"	1¾"	1¼"	¾"	17/32"	⅜"	6¾"	3½"	1⅝"	½"
W16x45	3'-0"	8'-6"	2.23	8'-3"	2'-8½"	162'-0"	130	3'-6"	1" x 4½"	7½"	3"	1¾"	4"	1¾"	1¼"	¾"	17/32"	⅜"	7"	3½"	1¾"	½"

*Dimensional changes required for varying site conditions shall be approved by the Engineer.

POST	FUSE PLATE BOLT SIZE																				
	Sign Height																				
	4'-0"	5'-0"	6'-0"	7'-0"	8'-0"	9'-0"	10'-0"	11'-0"	12'-0"	13'-0"	14'-0"	15'-0"	16'-0"	17'-0"	18'-0"	19'-0"	20'-0"	21'-0"	22'-0"	23'-0"	24'-0"
W6x9	½" x 1½"	½" x 1½"	½" x 1½"	½" x 1½"	——	——	——	——	——	——	——	——	——	——	——	——	——	——	——	——	——
W6x15	½" x 1¾"	½" x 1¾"	½" x 1¾"	⅝" x 2"	⅝" x 2"	¾" x 2"	¾" x 2"	¾" x 2"	¾" x 2"	——	——	——	——	——	——	——	——	——	——	——	——
W8x18	½" x 1¾"	½" x 1¾"	½" x 1¾"	½" x 1¾"	⅝" x 2"	⅝" x 2"	¾" x 2"	¾" x 2"	¾" x 2"	¾" x 2"	——	——	——	——	——	——	——	——	——	——	——
W10x22	½" x 2"	½" x 2"	½" x 2"	½" x 2"	½" x 2"	⅝" x 2"	⅝" x 2"	¾" x 2¼"	¾" x 2¼"	¾" x 2¼"	¾" x 2¼"	¾" x 2¼"	¾" x 2¼"	——	——	——	——	——	——	——	——
W10x26	½" x 2"	½" x 2"	½" x 2"	½" x 2"	½" x 2"	⅝" x 2¼"	⅝" x 2¼"	¾" x 2½"	¾" x 2½"	¾" x 2½"	¾" x 2½"	¾" x 2½"	¾" x 2½"	¾" x 2½"	——	——	——	——	——	——	——
W12x26	½" x 2"	½" x 2"	½" x 2"	½" x 2"	½" x 2"	⅝" x 2¼"	⅝" x 2¼"	¾" x 2½"	¾" x 2½"	¾" x 2½"	¾" x 2½"	¾" x 2½"	¾" x 2½"	¾" x 2½"	¾" x 2½"	——	——	——	——	——	——
W14x30	½" x 2"	½" x 2"	½" x 2"	½" x 2"	½" x 2"	⅝" x 2"	⅝" x 2"	¾" x 2¼"	¾" x 2¼"	¾" x 2¼"	¾" x 2¼"	¾" x 2¼"	¾" x 2¼"	¾" x 2¼"	¾" x 2¼"	¾" x 2¼"	¾" x 2¼"	——	——	——	——
W14x38	½" x 2"	½" x 2"	½" x 2"	½" x 2"	½" x 2"	⅝" x 2¼"	⅝" x 2¼"	¾" x 2½"	¾" x 2½"	¾" x 2½"	¾" x 2½"	⅞" x 2½"	⅞" x 2½"	1" x 2¾"	1" x 2¾"	1" x 2¾"	1" x 2¾"	1" x 2¾"	1" x 2¾"	1" x 2¾"	1" x 2¾"
W16x45	——	½" x 2"	½" x 2"	½" x 2"	½" x 2"	½" x 2"	½" x 2"	⅝" x 2¼"	⅝" x 2¼"	⅝" x 2¼"	¾" x 2½"	¾" x 2½"	⅞" x 2½"	⅞" x 2½"	⅞" x 2½"	1" x 2¾"	1" x 2¾"	1" x 2¾"	1" x 2¾"	1" x 2¾"	1" x 2¾"

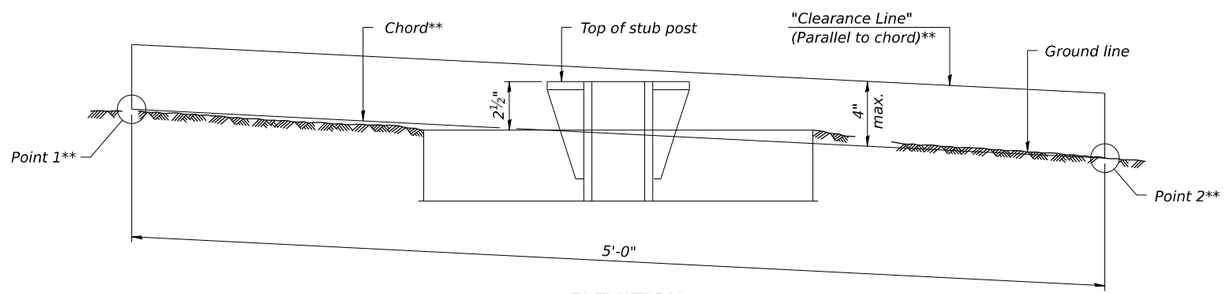

ELEVATION
GROUND LINE & STUB POST

** For all "Point 1" and "Point 2" locations, "Clearance Line" must be at or above top of stub post.

(1) Quantity includes all concrete necessary for one foundation.

(2) Includes reinforcement bars and spiral hooping for one foundation.

BAW-A-2 5-15-2023

BREAK-AWAY WIDE FLANGE STEEL SIGN POST TABLES
(Sheet 2 of 2)

MODEL: $MODELNAME$
FILE NAME: D876E84-I5570-alt-SignDt-73.dgn

ABNA DESIGN FIRM REG. 184.002117

USER NAME = jacobspw18lcs03$	DESIGNED -	REVISED -
	DRAWN -	REVISED -
PLOT SCALE = 0.16666667 ' / in.	CHECKED -	REVISED -
PLOT DATE = 10/2/2025	DATE - 2025/10/03	REVISED -

STATE OF ILLINOIS
DEPARTMENT OF TRANSPORTATION

SIGN DETAILS

SCALE: NTS | SHEET 73 OF 73 SHEETS | STA. | TO STA.

F.A.I. RTE.	SECTION	COUNTY	TOTAL SHEETS	SHEET NO.
70	Section82-(5,6)RS-2, 60-6RS-2	MADISON & ST. CLAIR	678	328

CONTRACT NO. 76E84

ILLINOIS | FED. AID PROJECT

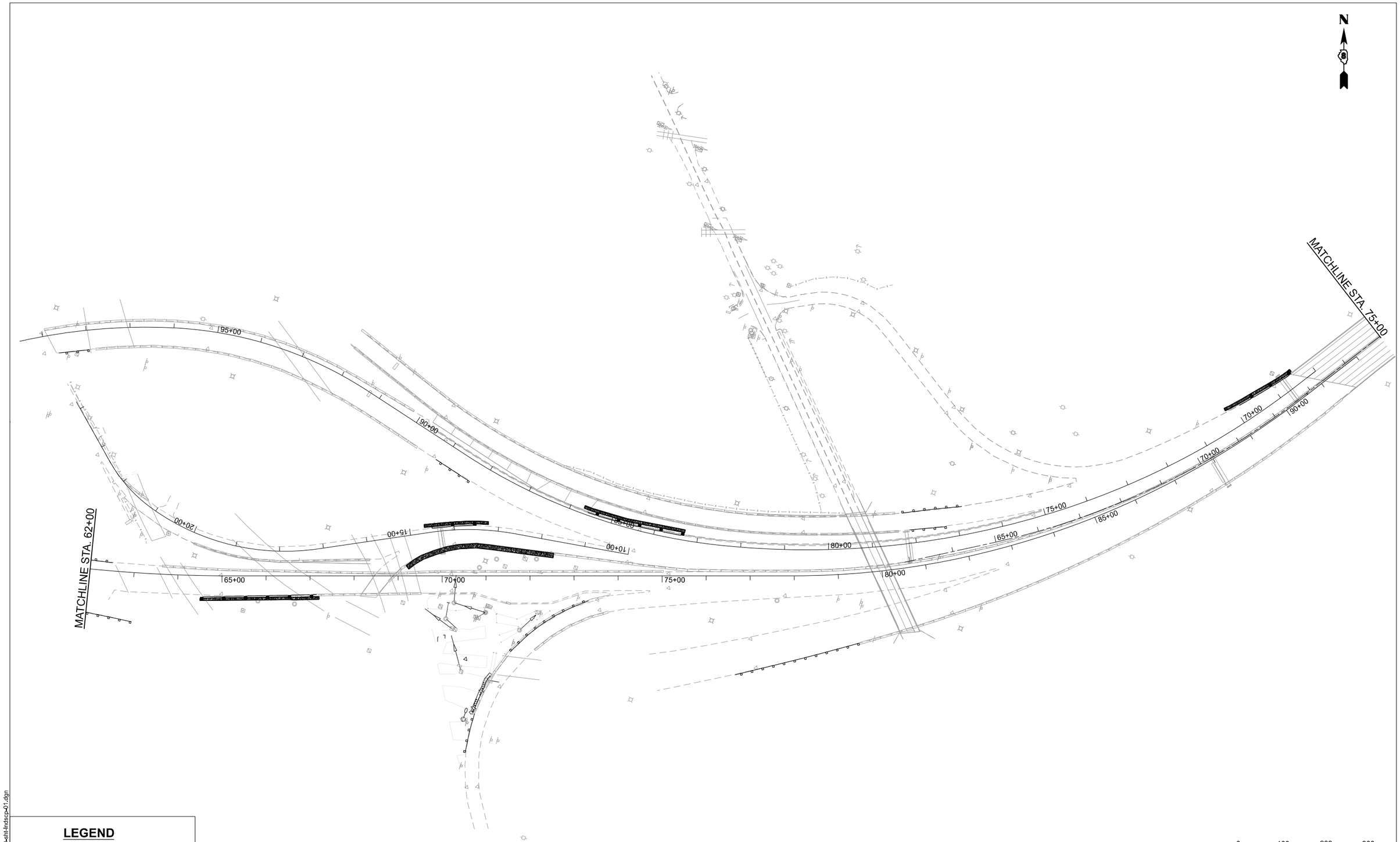

LEGEND

SEEDING CLASS 2

MULCH, METHOD 1

MODEL: $MODELNAMES
FILE NAME: D876E84-I5570-esht-lndscp-01.dgn

Jacobs
525 West Monroe
Suite 1600
Chicago, IL 60661
(312) 251-3000

USER NAME = jacobspw18lcs03$	DESIGNED -	REVISED -	
	DRAWN -	REVISED -	
PLOT SCALE = 0.16666667 ' / in.	CHECKED -	REVISED -	
PLOT DATE = 10/2/2025	DATE - 2025/10/03	REVISED -	

STATE OF ILLINOIS
DEPARTMENT OF TRANSPORTATION

LANDSCAPING PLANS
I–55 /I–70

SCALE: 1"=100' | SHEET 1 OF 12 SHEETS | STA. | TO STA.

F.A.I. RTE.	SECTION	COUNTY	TOTAL SHEETS	SHEET NO.
70	Section82-(5,6)RS-2, 60-6RS-2	MADISON & ST. CLAIR	678	329

CONTRACT NO. 76E84

ILLINOIS | FED. AID PROJECT

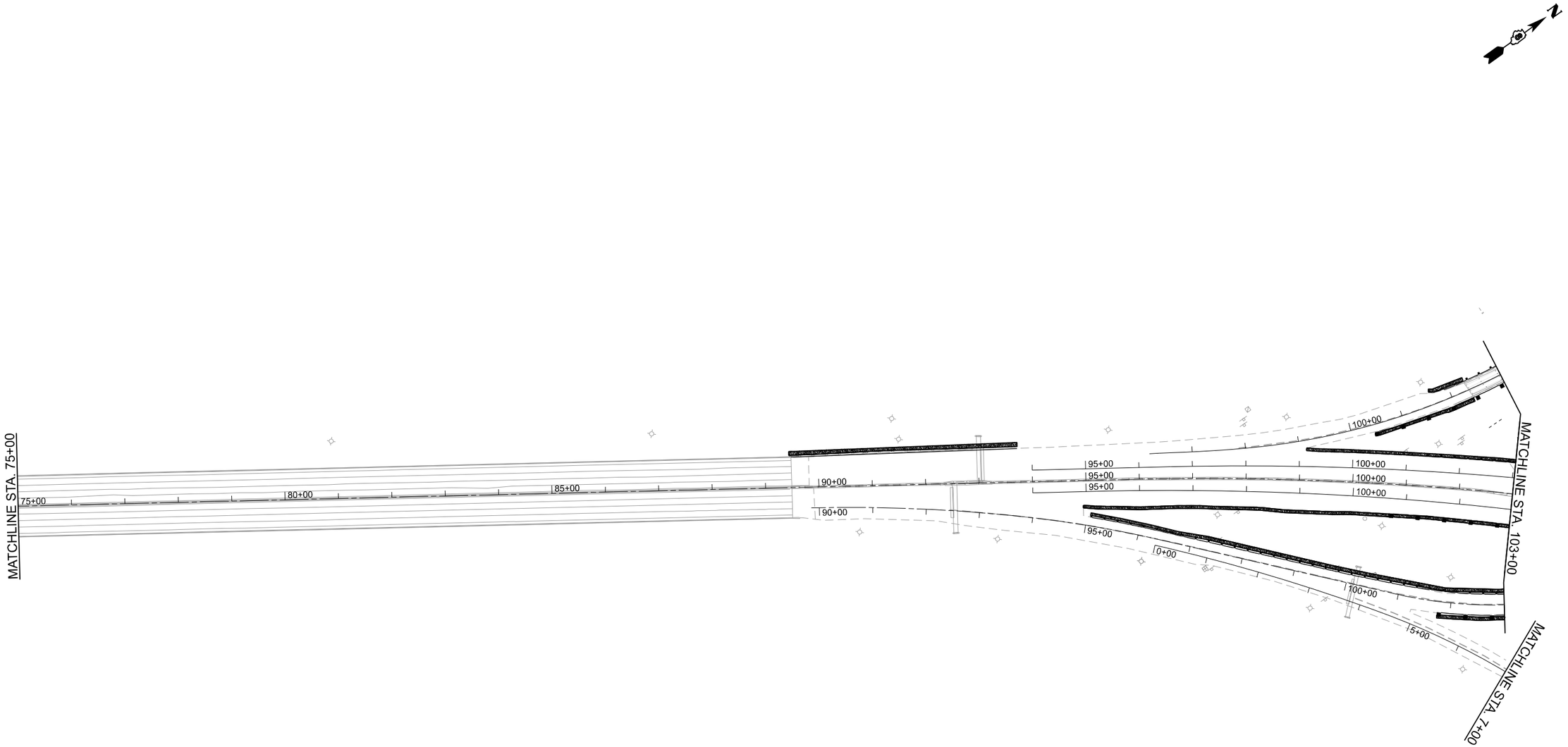

LEGEND

SEEDING CLASS 2

MULCH, METHOD 1

0 100 200 300

SCALE IN FEET

MODEL: $MODELNAMES
FILE NAME: D876E84-15570-sht-lndscp-02.dgn

Jacobs
525 West Monroe
Suite 1600
Chicago, IL 60661
(312) 251-3000

USER NAME = jacobspw18lcs03$	DESIGNED -	REVISED -	
	DRAWN -	REVISED -	
PLOT SCALE = 0.16666667 ' / in.	CHECKED -	REVISED -	
PLOT DATE = 10/2/2025	DATE - 2025/10/03	REVISED -	

STATE OF ILLINOIS
DEPARTMENT OF TRANSPORTATION

LANDSCAPING PLANS
I-55 /I-70

SCALE: 1"=100' | SHEET 2 OF 12 SHEETS | STA. | TO STA.

F.A.I. RTE.	SECTION	COUNTY	TOTAL SHEETS	SHEET NO.
70	Section82-(5,6)RS-2, 60-6RS-2	MADISON & ST. CLAIR	678	330

CONTRACT NO. 76E84

ILLINOIS | FED. AID PROJECT

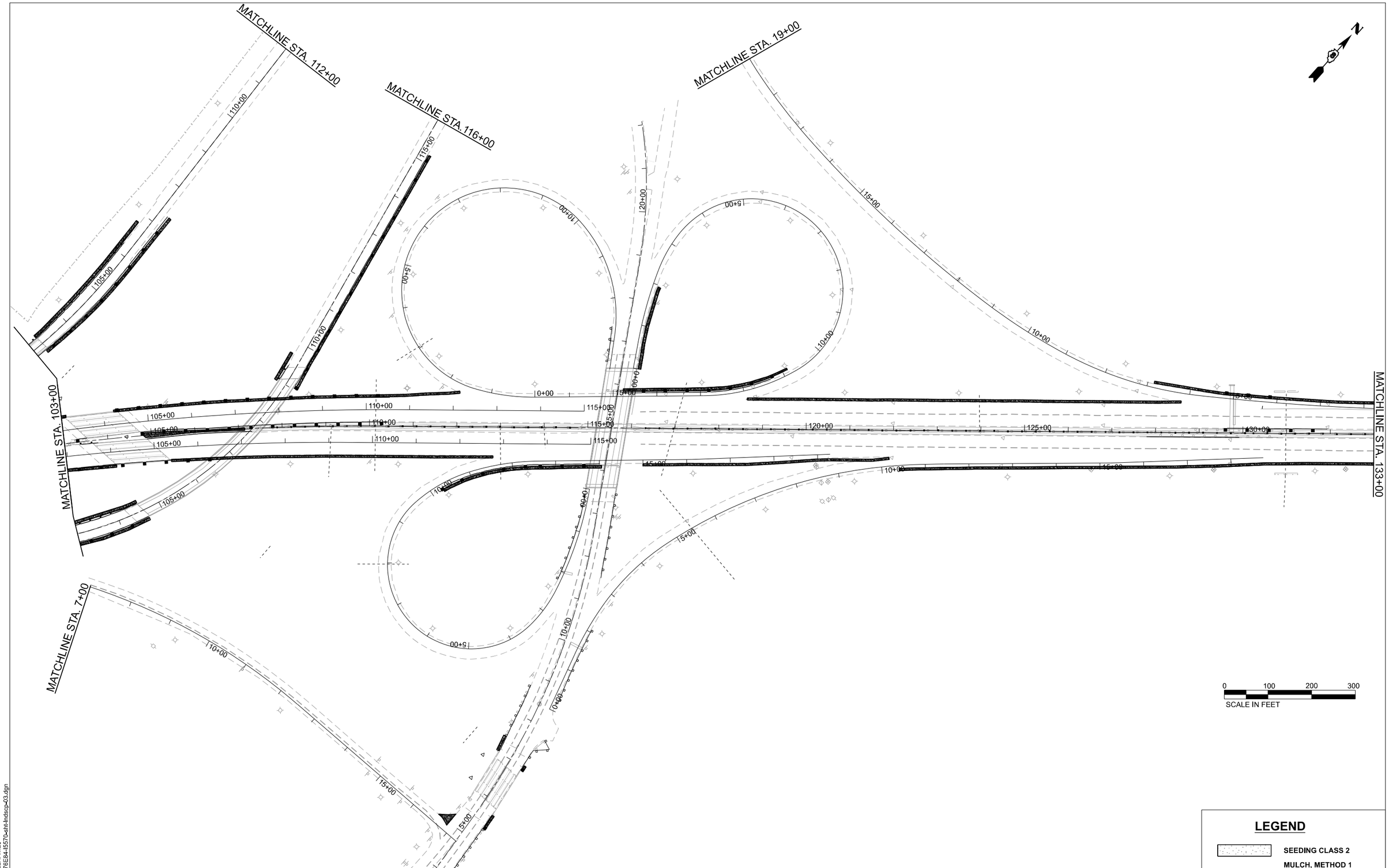

LEGEND

SEEDING CLASS 2

MULCH, METHOD 1

MODEL: $MODELNAME$
FILE NAME: D876E84-I5570-sht-lndscp-03.dgn

Jacobs
525 West Monroe
Suite 1600
Chicago, IL 60661
(312) 251-3000

USER NAME = jacobspw18lcs03$	DESIGNED -	REVISED -	
	DRAWN -	REVISED -	
PLOT SCALE = 0.16666667 ' / in.	CHECKED -	REVISED -	
PLOT DATE = 10/2/2025	DATE - 2025/10/03	REVISED -	

STATE OF ILLINOIS
DEPARTMENT OF TRANSPORTATION

LANDSCAPING PLANS
I–55 /I–70

SCALE: 1"=100' | SHEET 3 OF 12 SHEETS | STA. TO STA.

F.A.I. RTE.	SECTION	COUNTY	TOTAL SHEETS	SHEET NO.
70	Section82-(5,6)RS-2, 60-6RS-2	MADISON & ST. CLAIR	678	331

CONTRACT NO. 76E84

ILLINOIS | FED. AID PROJECT

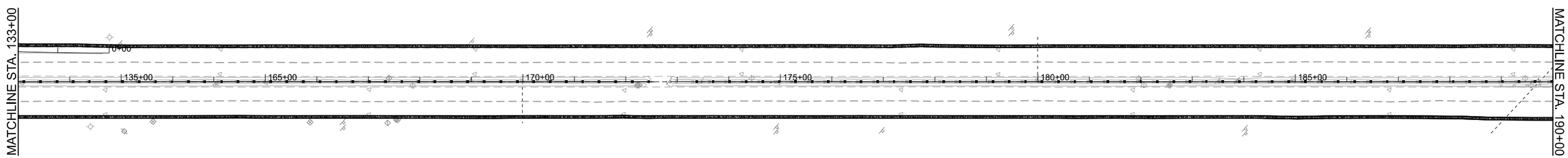

LEGEND

SEEDING CLASS 2

MULCH, METHOD 1

0 100 200 300

SCALE IN FEET

MODEL: $MODELNAMES
FILE NAME: D876E84-I5570-seht-lndscp-04.dgn

Jacobs
525 West Monroe
Suite 1600
Chicago, IL 60661
(312) 251-3000

USER NAME = jacobspw18ics03$	DESIGNED -	REVISED -	
	DRAWN -	REVISED -	
PLOT SCALE = 0.16666667 ' / in.	CHECKED -	REVISED -	
PLOT DATE = 10/2/2025	DATE - 2025/10/03	REVISED -	

STATE OF ILLINOIS
DEPARTMENT OF TRANSPORTATION

LANDSCAPING PLANS
I–55 /I–70

SCALE: 1"=100' | SHEET 4 OF 12 SHEETS | STA. | TO STA.

F.A.I. RTE.	SECTION	COUNTY	TOTAL SHEETS	SHEET NO.
70	Section82-(5,6)RS-2, 60-6RS-2	MADISON & ST. CLAIR	678	332

CONTRACT NO. 76E84

ILLINOIS | FED. AID PROJECT

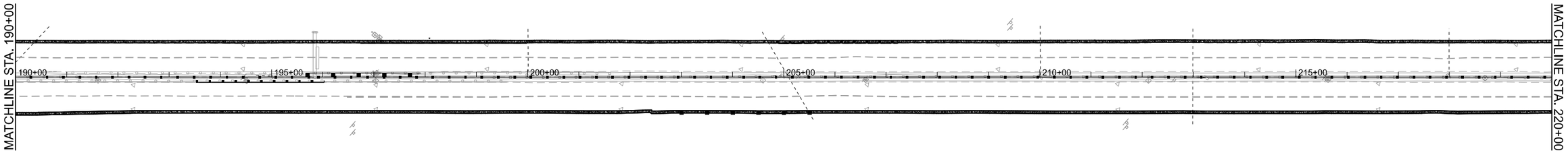

LEGEND

SEEDING CLASS 2

MULCH, METHOD 1

0 100 200 300

SCALE IN FEET

MODEL: $MODELNAMES
FILE NAME: D876E84-I5570-sht-lndscp-05.dgn

Jacobs
525 West Monroe
Suite 1600
Chicago, IL 60661
(312) 251-3000

USER NAME = jacobspw18ics03$	DESIGNED -	REVISED -	
	DRAWN -	REVISED -	
PLOT SCALE = 0.16666667 ' / in.	CHECKED -	REVISED -	
PLOT DATE = 10/2/2025	DATE - 2025/10/03	REVISED -	

STATE OF ILLINOIS
DEPARTMENT OF TRANSPORTATION

LANDSCAPING PLANS
I–55 /I–70

SCALE: 1"=100' | SHEET 5 OF 12 SHEETS | STA. | TO STA.

F.A.I. RTE.	SECTION	COUNTY	TOTAL SHEETS	SHEET NO.
70	Section82-(5,6)RS-2, 60-6RS-2	MADISON & ST. CLAIR	678	333
		CONTRACT NO. 76E84		
		ILLINOIS	FED. AID PROJECT	

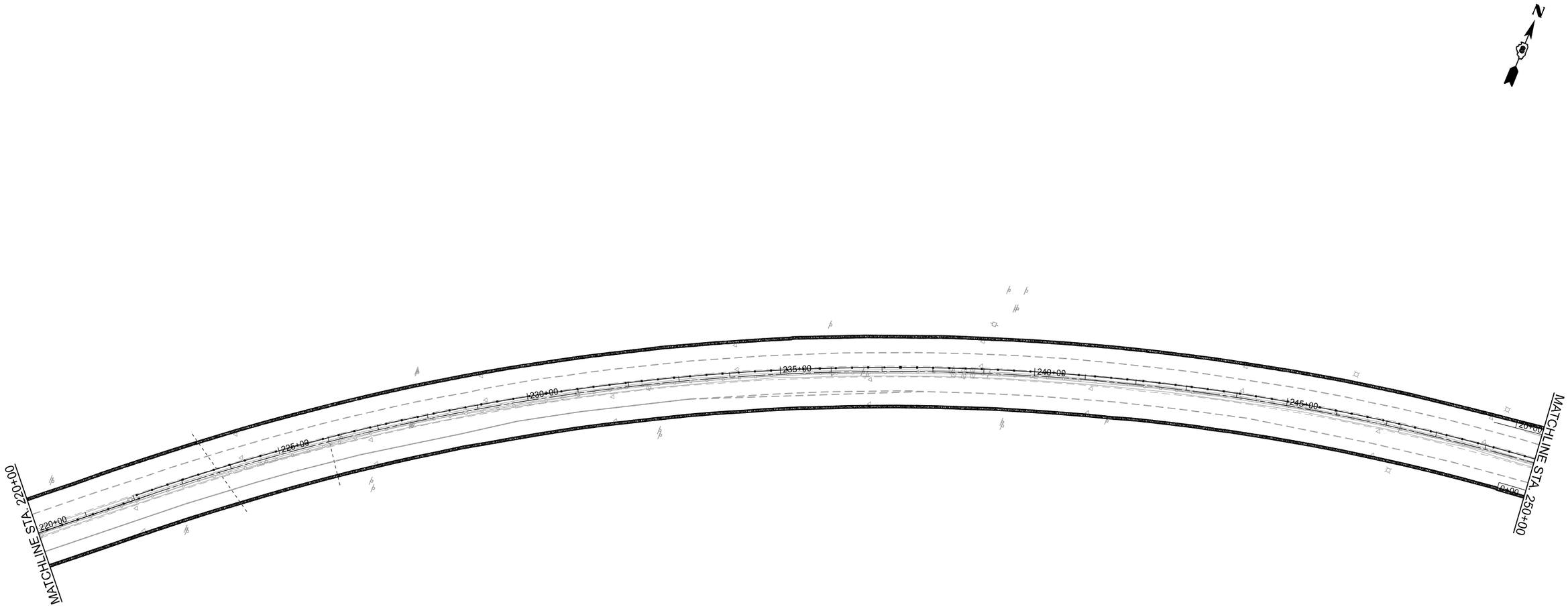

LEGEND

SEEDING CLASS 2

MULCH, METHOD 1

0 100 200 300

SCALE IN FEET

MODEL: $MODELNAME$
FILE NAME: D876E84-I5570-sht-lndscp-06.dgn

Jacobs
525 West Monroe
Suite 1600
Chicago, IL 60661
(312) 251-3000

USER NAME = jacobspw18lcs01$	DESIGNED -	REVISED -	
	DRAWN -	REVISED -	
PLOT SCALE = 0.16666667 ' / in.	CHECKED -	REVISED -	
PLOT DATE = 10/2/2025	DATE - 2025/10/03	REVISED -	

STATE OF ILLINOIS
DEPARTMENT OF TRANSPORTATION

LANDSCAPING PLANS
I–55 /I–70

SCALE: 1"=100' | SHEET 6 OF 12 SHEETS | STA. TO STA.

F.A.I. RTE.	SECTION	COUNTY	TOTAL SHEETS	SHEET NO.
70	Section82-(5,6)RS-2, 60-6RS-2	MADISON & ST. CLAIR	678	334

CONTRACT NO. 76E84

ILLINOIS | FED. AID PROJECT

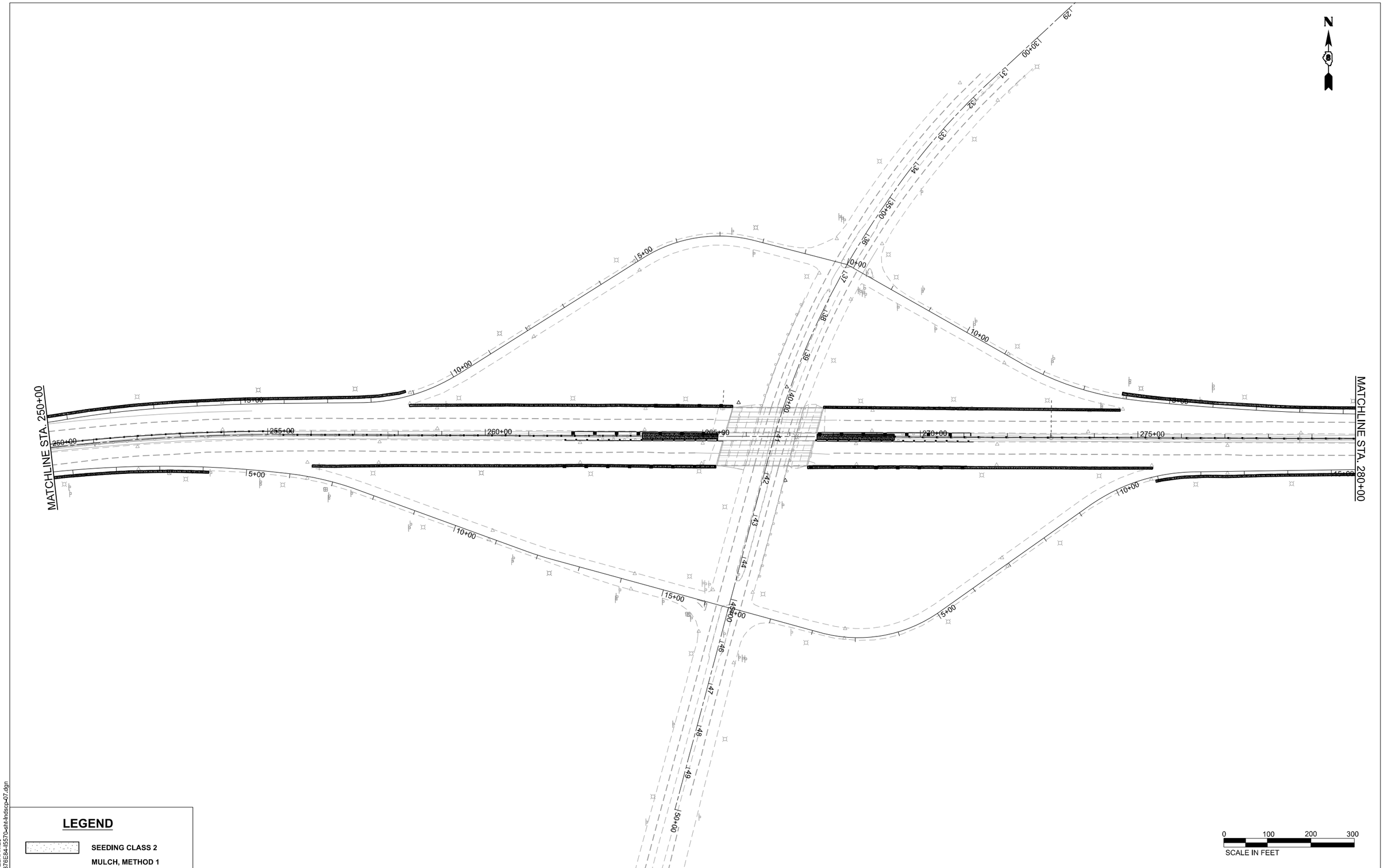

LEGEND

SEEDING CLASS 2

MULCH, METHOD 1

0 100 200 300

SCALE IN FEET

MODEL: $MODELNAMES
FILE NAME: D876E84-I5570-sht-lndscp-07.dgn

Jacobs
525 West Monroe
Suite 1600
Chicago, IL 60661
(312) 251-3000

USER NAME = jacobspw18lcs03$	DESIGNED -	REVISED -	
	DRAWN -	REVISED -	
PLOT SCALE = 0.16666667 ' / in.	CHECKED -	REVISED -	
PLOT DATE = 10/2/2025	DATE - 2025/10/03	REVISED -	

STATE OF ILLINOIS
DEPARTMENT OF TRANSPORTATION

LANDSCAPING PLANS
I–55 /I–70

SCALE: 1"=100' | SHEET 7 OF 12 SHEETS | STA. TO STA.

F.A.I. RTE.	SECTION	COUNTY	TOTAL SHEETS	SHEET NO.
70	Section82-(5,6)RS-2, 60-6RS-2	MADISON & ST. CLAIR	678	335

CONTRACT NO. 76E84

ILLINOIS | FED. AID PROJECT

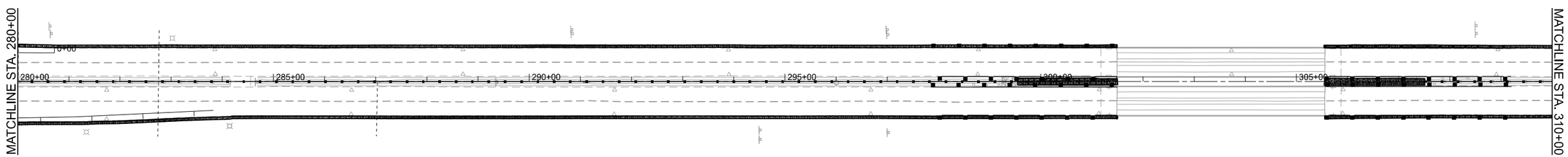

LEGEND

SEEDING CLASS 2

MULCH, METHOD 1

0 100 200 300

SCALE IN FEET

MODEL: $MODELNAMES
FILE NAME: D876E84-I5570-sht-lndscp-08.dgn

Jacobs
525 West Monroe
Suite 1600
Chicago, IL 60661
(312) 251-3000

USER NAME = jacobspw18lcs03$	DESIGNED -	REVISED -	
	DRAWN -	REVISED -	
PLOT SCALE = 0.16666667 ' / in.	CHECKED -	REVISED -	
PLOT DATE = 10/2/2025	DATE - 2025/10/03	REVISED -	

STATE OF ILLINOIS
DEPARTMENT OF TRANSPORTATION

LANDSCAPING PLANS
I–55 /I–70

SCALE: 1"=100' | SHEET 8 OF 12 SHEETS | STA. | TO STA.

F.A.I. RTE.	SECTION	COUNTY	TOTAL SHEETS	SHEET NO.
70	Section82-(5,6)RS-2, 60-6RS-2	MADISON & ST. CLAIR	678	336

CONTRACT NO. 76E84

ILLINOIS | FED. AID PROJECT

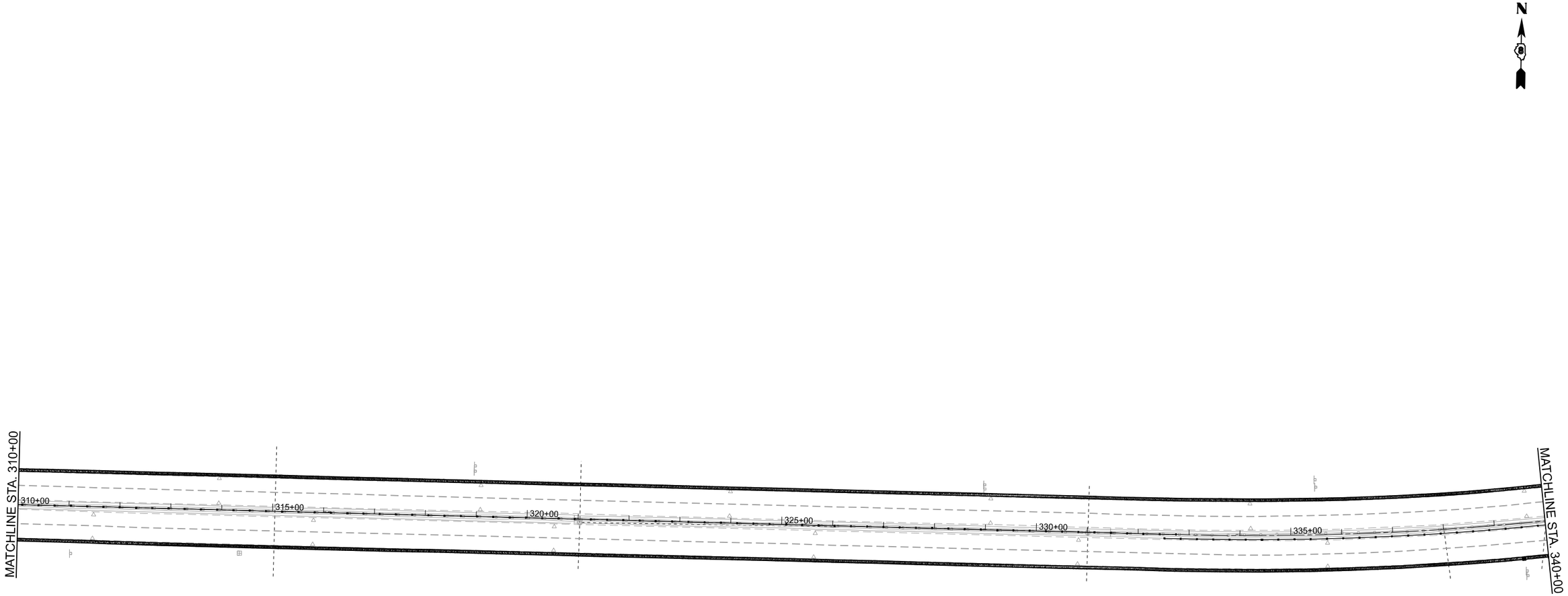

LEGEND

SEEDING CLASS 2

MULCH, METHOD 1

0 100 200 300
SCALE IN FEET

MODEL: $MODELNAMES$
FILE NAME: D876E84-I5570-sht-lndscp-p09.dgn

Jacobs
525 West Monroe
Suite 1600
Chicago, IL 60661
(312) 251-3000

USER NAME = jacobspw18ics03$	DESIGNED -	REVISED -	
	DRAWN -	REVISED -	
PLOT SCALE = 0.16666667 ' / in.	CHECKED -	REVISED -	
PLOT DATE = 10/2/2025	DATE - 2025/10/03	REVISED -	

STATE OF ILLINOIS
DEPARTMENT OF TRANSPORTATION

LANDSCAPING PLANS
I–55 /I–70

SCALE: 1"=100' | SHEET 9 OF 12 SHEETS | STA. | TO STA.

F.A.I. RTE.	SECTION	COUNTY	TOTAL SHEETS	SHEET NO.
70	Section82-(5,6)RS-2, 60-6RS-2	MADISON & ST. CLAIR	678	337

CONTRACT NO. 76E84

ILLINOIS | FED. AID PROJECT

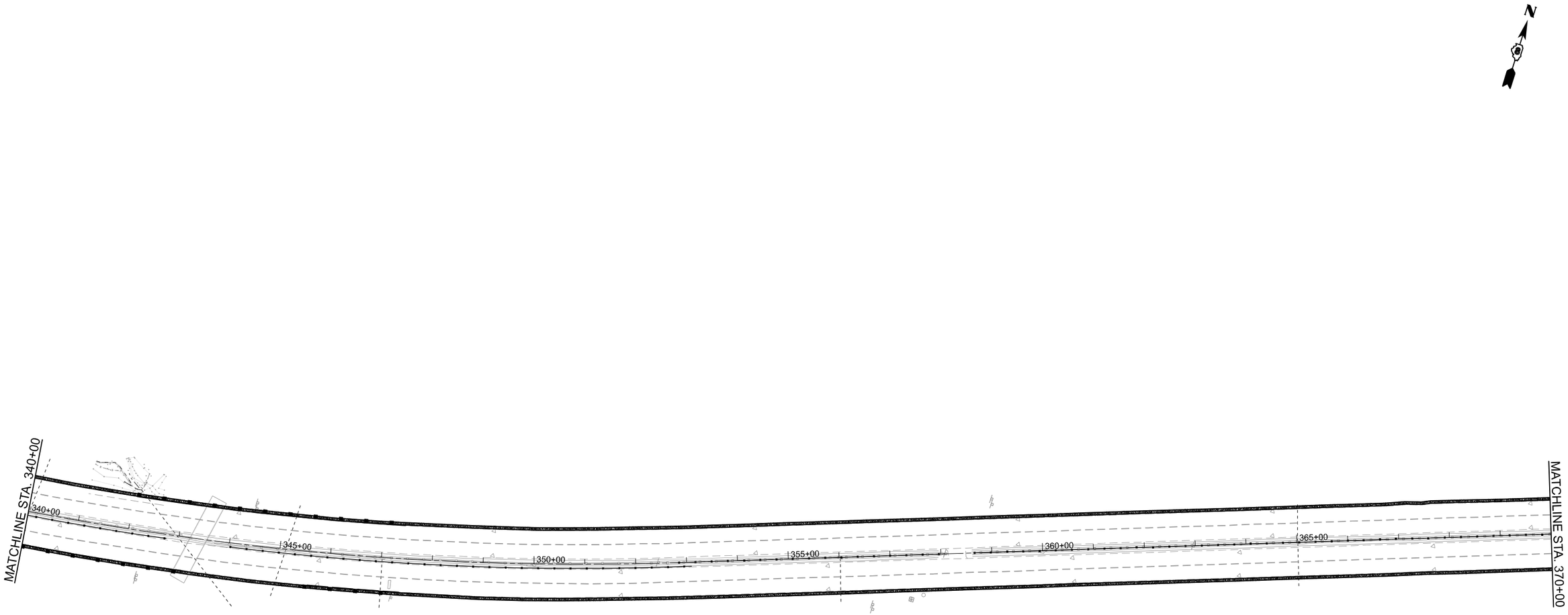

LEGEND

SEEDING CLASS 2

MULCH, METHOD 1

0 100 200 300

SCALE IN FEET

MODEL: $MODELNAMES
FILE NAME: D876E84-I5570-sht-lndscp-10.dgn

Jacobs
525 West Monroe
Suite 1600
Chicago, IL 60661
(312) 251-3000

USER NAME = jacobspw18lcs03$	DESIGNED -	REVISED -	
	DRAWN -	REVISED -	
PLOT SCALE = 0.16666667 ' / in.	CHECKED -	REVISED -	
PLOT DATE = 10/2/2025	DATE - 2025/10/03	REVISED -	

STATE OF ILLINOIS
DEPARTMENT OF TRANSPORTATION

LANDSCAPING PLANS
I–55 /I–70

SCALE: 1"=100' | SHEET 10 OF 12 SHEETS | STA. TO STA.

F.A.I. RTE.	SECTION	COUNTY	TOTAL SHEETS	SHEET NO.
70	Section82-(5,6)RS-2, 60-6RS-2	MADISON & ST. CLAIR	678	338

CONTRACT NO. 76E84

ILLINOIS | FED. AID PROJECT

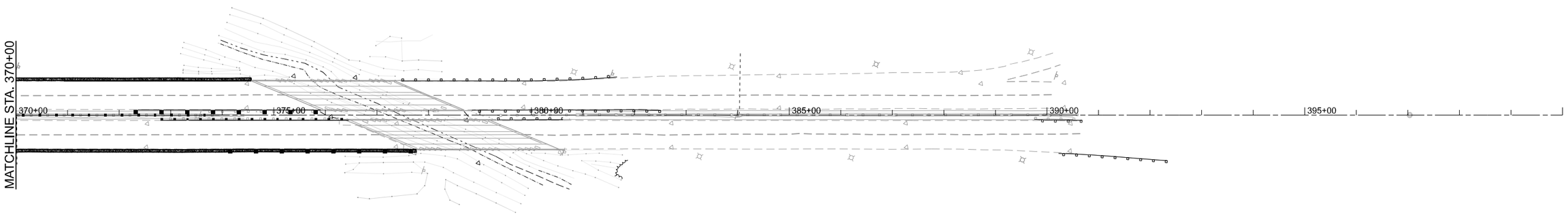

LEGEND

SEEDING CLASS 2

MULCH, METHOD 1

0 100 200 300

SCALE IN FEET

MODEL: $MODELNAMES
FILE NAME: D876E84-I5570-sht-lndscp-11.dgn

Jacobs
525 West Monroe
Suite 1600
Chicago, IL 60661
(312) 251-3000

USER NAME = jacobspw18ics01$	DESIGNED -	REVISED -	
	DRAWN -	REVISED -	
PLOT SCALE = 0.16666667 ' / in.	CHECKED -	REVISED -	
PLOT DATE = 10/2/2025	DATE - 2025/10/03	REVISED -	

STATE OF ILLINOIS
DEPARTMENT OF TRANSPORTATION

LANDSCAPING PLANS
IL 203 AND RAMP F

SCALE: 1"=100' | SHEET 11 OF 12 SHEETS | STA. TO STA.

F.A.I. RTE.	SECTION	COUNTY	TOTAL SHEETS	SHEET NO.
70	Section82-(5,6)RS-2, 60-6RS-2	MADISON & ST. CLAIR	678	339
		CONTRACT NO. 76E84		
		ILLINOIS	FED. AID PROJECT	

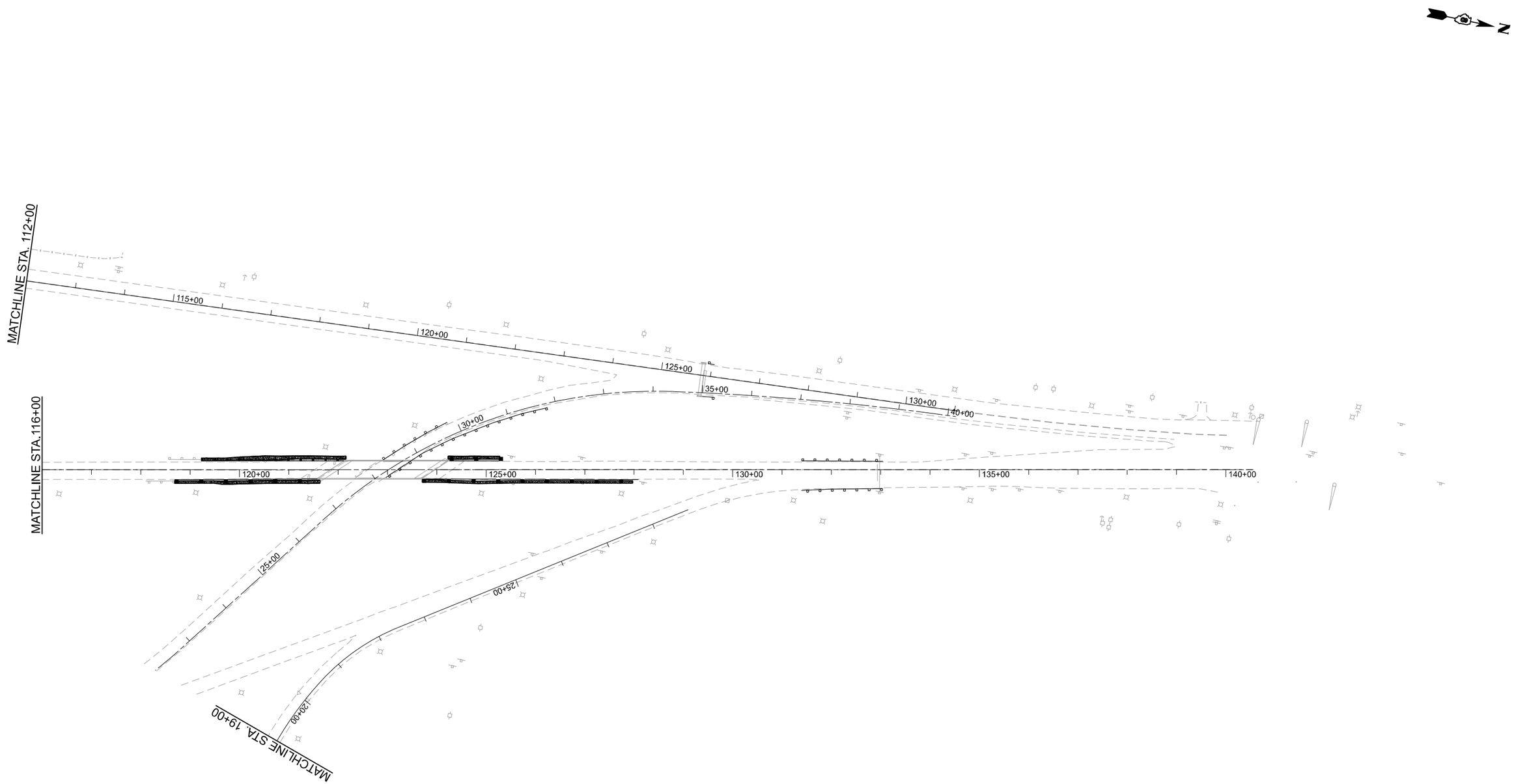

LEGEND

SEEDING CLASS 2

MULCH, METHOD 1

0 100 200 300

SCALE IN FEET

MODEL: $MODELNAMES
FILE NAME: D876E84-I5570-seht-lndscp-12.dgn

Jacobs
525 West Monroe
Suite 1600
Chicago, IL 60661
(312) 251-3000

USER NAME = jacobspw18ics03$	DESIGNED -	REVISED -	
	DRAWN -	REVISED -	
PLOT SCALE = 0.16666667 ' / in.	CHECKED -	REVISED -	
PLOT DATE = 10/2/2025	DATE - 2025/10/03	REVISED -	

STATE OF ILLINOIS
DEPARTMENT OF TRANSPORTATION

LANDSCAPING PLANS
I–55 /I–70

SCALE: 1"=100' | SHEET 12 OF 12 SHEETS | STA. TO STA.

F.A.I. RTE.	SECTION	COUNTY	TOTAL SHEETS	SHEET NO.
70	Section82-(5,6)RS-2, 60-6RS-2	MADISON & ST. CLAIR	678	340

CONTRACT NO. 76E84

ILLINOIS | FED. AID PROJECT

LIGHTING AND ELECTRICAL LEGEND

SYMBOL	DESCRIPTION
	EXISTING HIGH MAST LIGHTING TO BE REMOVED
	PROPOSED HIGH MAST LIGHTING WITH NEW FOUNDATION (NUMBER OF LUMINAIRES AS INDICATED)
	PROPOSED LIGHTING UNIT, 50' MH, 15' MAST ARM ALUMINUM POLE, OUTPUT DESIGNATION (H) ON NEW FOUNDATION
	PROPOSED LIGHTING UNIT, OUTPUT DESIGNATION H BRIDGE MOUNTED
	EXISTING LIGHTING UNIT TO REMAIN
	EXISTING LIGHTING UNIT TO BE REMOVED AND RELOCATED
	RELOCATED LIGHTING UNIT ON NEW FOUNDATION
	EXISTING LIGHTING UNIT TO BE REMOVED
	PROPOSED UNDERPASS LIGHTING LUMINAIRE OUTPUT DESIGNATION D
	PROPOSED LIGHTING CONTROLLER
	EXISTING LIGHTING CONTROLLER TO BE REMOVED
	PROPOSED LIGHTING HANDHOLE
	PROPOSED LIGHTING JUNCTION BOX
	PROPOSED LIGHTING ELECTRICAL GROUND
	PROPOSED UNIT DUCT, 600V, 2-1C NO.8, 1/C NO.8 GROUND, (XLP-TYPE USE), 3/4" DIA. POLYETHYLENE UNLESS OTHERWISE SPECIFIED
	PROPOSED UNDERGROUND CONDUIT, GALVANIZED STEEL, 2" DIA. OR AS NOTED OTHERWISE
	PROPOSED ELECTRIC CABLE IN CONDUIT
	EXISTING UNIT DUCT IN TRENCH
	EXISTING UNIT DUCT IN CONDUIT

AMEREN COORDINATION - (REFERENCE ONLY)

IDOT Contact: Robert Harbaugh

IDOT Phone NO: (618)346-3100

ABBREVIATIONS

ABBREVIATION	DESCRIPTION
DIA.	DIAMETER
E.O.P.	EDGE OF PAVEMENT
I	INSTALL
PROP	PROPOSED
REL	RELOCATED
STA	STATION

INDEX OF SHEETS

LIGHT POLE DESIGNATION

CONTROL CABINET
CIRCUITRY
POLE NUMBER

X B 12

CABLE/CONDUIT LEGEND

(A) UNIT DUCT, 600V, 2-1C NO.8, 1/C NO.8 GROUND, (XLP-TYPE USE), 3/4" DIA. POLYETHYLENE

(B) UNIT DUCT, 600V, 2-1C NO.8, 1/C NO.8 GROUND, (XLP-TYPE USE), 3/4" DIA. POLYETHYLENE IN UNDERGROUND CONDUIT, PVC, 2" DIA.

(C) UNIT DUCT, 600V, 4-1C NO.8, 2/C NO.8 GROUND, (XLP-TYPE USE), 3/4" DIA. POLYETHYLENE IN UNDERGROUND CONDUIT, PVC, 3" DIA.

(D) CONDUIT ATTACHED TO STRUCTURE, 2" DIA., GALVANIZED STEEL 600V (XLP-TYPE USE) 2-1/C NO. 8, 1/C NO. 8 GROUND

(E) CONDUIT ATTACHED TO STRUCTURE, 3" DIA., GALVANIZED STEEL 600V (XLP-TYPE USE) 4-1/C NO. 8, 2/C NO. 8 GROUND

(F) CABLE IN EXISTING CONDUIT EMBEDDED IN STRUCTURE 600V (XLP-TYPE USE) 2-1/C NO. 8, 1/C NO. 8 GROUND

(G) 3-1/C NO. 2/0 600V (XLP-TYPE USE) IN 2" DIA. RIGID GALVANIZED STEEL

(H) UNIT DUCT, 600V, 2-1C NO.4,1/C NO.6 GROUND, (XLP-TYPE USE), 1¼DIA. POLYETHYLENE (TYP)

IDOT LIGHTING BILL OF MATERIALS

PAY ITEM DESCRIPTION	UNITS	QUAN.
ELECTRIC SERVICE INSTALLATION	EACH	2
UNDERGROUND CONDUIT, GALVANIZED STEEL, 2" DIA	FOOT	1200
UNDERGROUND CONDUIT, PVC, 2" DIA.	FOOT	840
UNDERGROUND CONDUIT, PVC, 3" DIA.	FOOT	781
UNDERGROUND CONDUIT, PVC, 4" DIA.	FOOT	200
CONDUIT ATTACHED TO STRUCTURE, 1" DIA., GALVANIZED STEEL	FOOT	1077
CONDUIT ATTACHED TO STRUCTURE, 2" DIA., GALVANIZED STEEL	FOOT	1400
CONDUIT ATTACHED TO STRUCTURE, 3" DIA., GALVANIZED STEEL	FOOT	304
JUNCTION BOX, STAINLESS STEEL, ATTACHED TO STRUCTURE, 6" X 6" X 4"	FOOT	28
JUNCTION BOX, STAINLESS STEEL, ATTACHED TO STRUCTURE, 12" X 10" X 6"	EACH	17
JUNCTION BOX, STAINLESS STEEL, ATTACHED TO STRUCTURE, 18" X 18" X 8"	EACH	10
UNIT DUCT, 600V, 2-1C NO.8, 1/C NO.8 GROUND, (XLP-TYPE USE), 3/4" DIA. POLYETHYLENE	EACH	56410
UNIT DUCT, 600V, 2-1C NO.4, 1/C NO.6 GROUND, (XLP-TYPE USE), 1 1/4" DIA. POLYETHYLENE	FOOT	917
ELECTRIC CABLE IN CONDUIT, 600V (XLP-TYPE USE) 1/C NO. 10	FOOT	3231
ELECTRIC CABLE IN CONDUIT, 600V (XLP-TYPE USE) 1/C NO. 8	FOOT	1515
ELECTRIC CABLE IN CONDUIT, 600V (XLP-TYPE USE) 1/C NO. 2/0	FOOT	3600
LUMINAIRE, LED, ROADWAY, OUTPUT DESIGNATION H	FOOT	137
LUMINAIRE, LED, UNDERPASS, WALLMOUNT, OUTPUT DESIGNATION D	EACH	28
LIGHTING CONTROLLER, BASE MOUNTED, 480VOLT, 200AMP	EACH	4
LIGHT POLE, ALUMINUM, 50 FT. M.H., 15 FT. MAST ARM	EACH	137
LIGHT TOWER, 100 FT. MOUNTING HEIGHT, LUMINAIRE MT. - 6	EACH	3
LIGHT POLE FOUNDATION, METAL, 15" BOLT CIRCLE, 8 5/8" X 8'	EACH	170
LIGHT TOWER FOUNDATION, 48" DIAMETER	EACH	68
BREAKAWAY DEVICE, COUPLING WITH ALUMINUM SKIRT OVER STAINLESS STEEL SCREEN	FOOT	680
REMOVAL OF LIGHTING UNIT, NO SALVAGE	EACH	80
REMOVAL OF POLE FOUNDATION	EACH	110
RELOCATE EXISTING LIGHTING UNIT	EACH	31
REMOVAL OF LIGHTING CONTROLLER	EACH	3
REMOVAL OF LIGHTING CONTROLLER FOUNDATION	EACH	3
REMOVE AND REPLACE FUSE KIT	EACH	33
REMOVE EXISTING JUNCTION BOX	EACH	7
REMOVAL OF LIGHT TOWER, NO SALVAGE	EACH	2
REMOVAL OF TOWER FOUNDATION	EACH	2
MAINTAIN EXISTING LIGHTING SYSTEM	L SUM	1

GENERAL NOTES

1. THIS PROJECT INCLUDES THE INSTALLATION OF A NEW LIGHTING SYSTEM TO REPLACE SEVERAL LEGACY LIGHTING SYSTEMS. ALONG FAI (I-55/70) BRIDGE OVER RACEWAY BLVD. THE PROJECT SHALL UPGRADE THE EXISTING HIGHMAST LIGHTING SYSTEM IN KIND. THE PROJECT SHALL ALSO UPGRADE THE EXISTING LIGHTING SYSTEMS AT INTERCHANGES FAI ROUTE 70 (I-55/70) @ IL ROUTE 111, AND FAI ROUTE 70 (I-55/70) @ IL ROUTE 203. IDOT-D8 WILL DETERMINE IF THE EXISTING LIGHTING EQUIPMENT TO BE REMOVED WILL BE SALVAGED. PROPOSED LIGHTING SHALL BE OWNED AND MAINTAINED BY THE STATE OF ILLINOIS.
2. THE CONTRACTOR SHALL CONTACT THE ELECTRIC UTILITY COMPANY AND IDOT TO COORDINATE THE ELECTRIC SERVICE WORK.
3. THE QUANTITIES OF RACEWAY WHERE INDICATED ON THESE PLANS ARE APPROXIMATIONS ONLY. THE CONTRACTOR SHALL FIELD VERIFY ALL LENGTHS AND SHALL INSTALL RACEWAYS IN COMPLETE COMPLIANCE WITH THE SPECIFIED REQUIREMENTS.
4. THE CONTRACTOR SHALL NOTIFY J.U.L.I.E. TO LOCATE AND MARK/STAKE ALL UNDERGROUND UTILITIES.
5. THE CONTRACTOR SHALL VERIFY LOCATIONS OF UNDERGROUND/OVERHEAD UTILITIES PRIOR TO INSTALLATION OF LIGHT POLES AND CONDUITS. IF THERE IS A CONFLICT WITH THE LIGHT POLES/CONDUITS AS SHOWN ON PLANS, THE CONTRACTOR SHALL SUGGEST ALTERNATIVE LOCATIONS AND COORDINATE WITH THE ENGINEER PRIOR TO PERFORMING ANY CONSTRUCTION WORK.
6. TRENCHES FOR LIGHTING RACEWAYS SHALL HAVE A MINIMUM DEPTH OF 30".
7. LIGHTING SYSTEM INSTALLATION SHALL CONFORM TO THE LATEST IDOT STANDARDS, NEC AND LOCAL CODES.
8. ALL ELECTRICAL EQUIPMENT AND PRODUCTS SHALL BE UL LISTED AND LABELED.
9. THE CONTRACTOR SHALL TAKE CARE WHEN INSTALLING UNIT DUCT TO AVOID CONFLICTS WITH EXISTING UNDERGROUND UTILITIES AND TREES ROOTS. THE CONTRACTOR SHALL BE RESPONSIBLE FOR ANY DAMAGE AS DETERMINED BY THE ENGINEER.
10. THE CONTRACTOR SHALL TAKE CARE WHEN INSTALLING LIGHT POLE FOUNDATIONS TO AVOID CONFLICTS WITH UNDERGROUND UTILITIES. WHEN CONFLICTS ARE ENCOUNTERED, THE CONTRACTOR SHALL REQUEST TO RELOCATE THE FOUNDATION. THE NEW LOCATION SHALL BE APPROVED BY THE ENGINEER PRIOR TO INSTALLATION.
11. GROUND RODS SHALL BE INSTALLED AT EACH PROPOSED HIGH MAST LIGHT TOWER.
12. EXISTING CONDUIT AND WIRING NOT IN USE SHALL BE ABANDONED UNLESS OTHERWISE CALLED OUT ON THE PLANS.
13. THERE ARE LOCATIONS WITHIN THE CONTRACT WHERE LIGHT POLES ARE BEING RELOCATED AND INSTALLED IN NEW LOCATIONS. CONTRACTOR SHALL INSTALL POLES PER IDOT STANDARD DETAIL AND INSTALL NEW FUSES. COST OF FUSES SHALL BE INCLUDED IN THE MAINTENANCE OF PROPOSED LIGHTING SYSTEM

MODEL: $MODELNAMES
FILE NAME: D876E84-I5570-sIht-RdyLgtPln-01_Legend.dgn

Jacobs
525 West Monroe
Suite 1600
Chicago, IL 60661
(312) 251-3000

USER NAME = jacobspw18ics03$	DESIGNED -	REVISED -	
	DRAWN -	REVISED -	
PLOT SCALE = 0.16666667 ' / in.	CHECKED -	REVISED -	
PLOT DATE = 10/2/2025	DATE - 2025/10/03	REVISED -	

STATE OF ILLINOIS
DEPARTMENT OF TRANSPORTATION

LIGHTING PLANS LEGEND

SCALE: NTS | SHEET 1 OF 31 SHEETS | STA. | TO STA.

F.A.I. RTE.	SECTION	COUNTY	TOTAL SHEETS	SHEET NO.
70	Section82-(5,6)RS-2, 60-6RS-2	MADISON & ST. CLAIR	678	341

CONTRACT NO. 76E84

ILLINOIS | FED. AID PROJECT

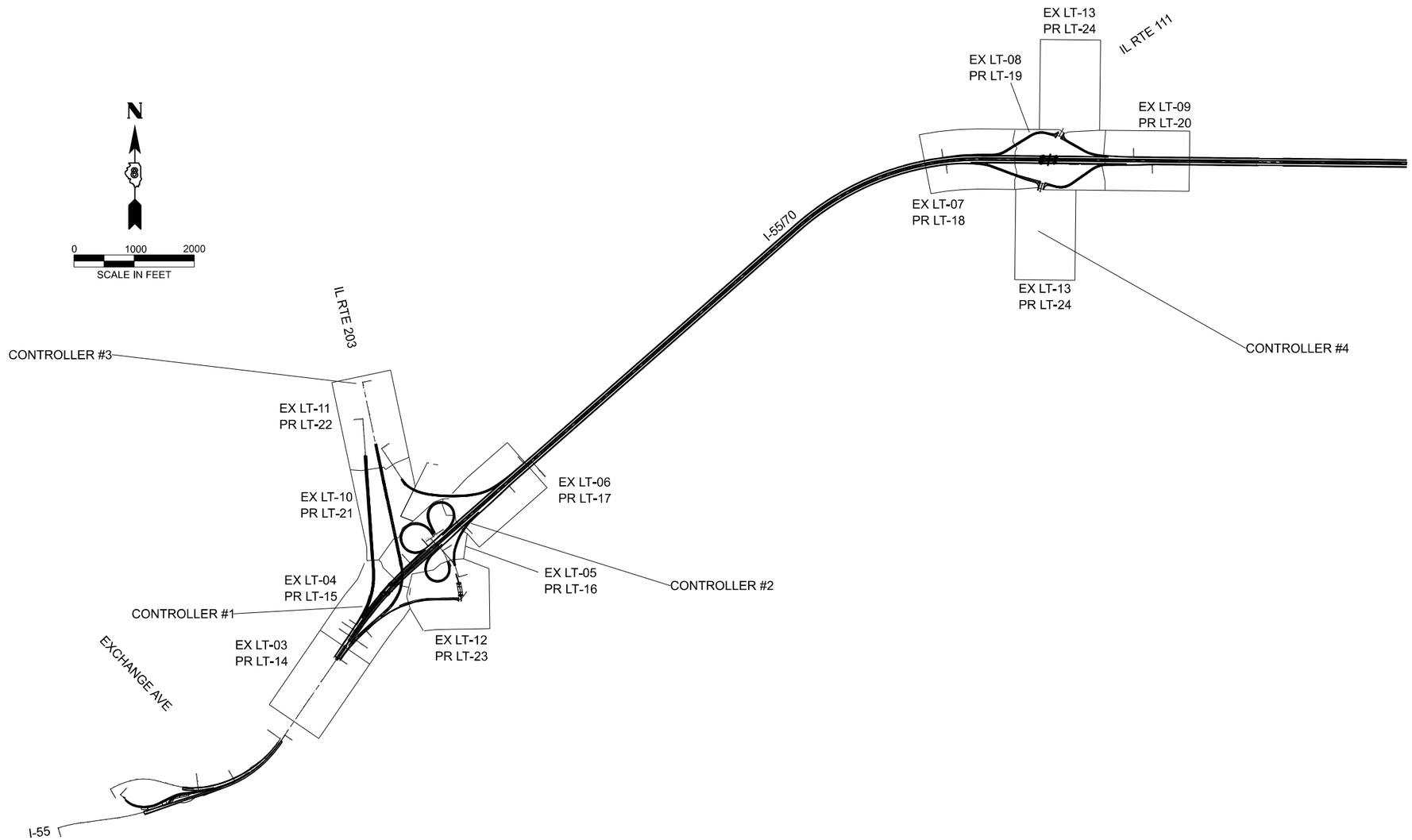

MODEL: $MODELNAMES
FILE NAME: D876E84-I5570-sht-LgtKeyMap.dgn

Jacobs
525 West Monroe
Suite 1600
Chicago, IL 60661
(312) 251-3000

USER NAME = jacobspw18lcs04$	DESIGNED -	REVISED -	
	DRAWN -	REVISED -	
PLOT SCALE = 0.16666667 ' / in.	CHECKED -	REVISED -	
PLOT DATE = 10/2/2025	DATE - 2025/10/03	REVISED -	

STATE OF ILLINOIS
DEPARTMENT OF TRANSPORTATION

LIGHTING KEY MAP

SCALE: 1"=100' | SHEET 2 OF 31 SHEETS | STA. | TO STA.

F.A.I. RTE.	SECTION	COUNTY	TOTAL SHEETS	SHEET NO.
70	Section82-(5,6)RS-2, 60-6RS-2	MADISON & ST. CLAIR	678	342

CONTRACT NO. 76E84

ILLINOIS | FED. AID PROJECT

NOTES

1. EXISTING LIGHTING CABLES (NOT SHOWN) SHALL BE REMOVED. CONDUITS CAN BE ABANDONED.

2. POLES TO BE RELOCATED SHALL BE REMOVED, AND SAFELY STORED BY CONTRACTOR. PROPOSED LIGHTING PLANS ILLUSTRATE LOCATIONS WHERE LIGHTING UNITS TO BE RELOCATED ARE TO BE PLACED.

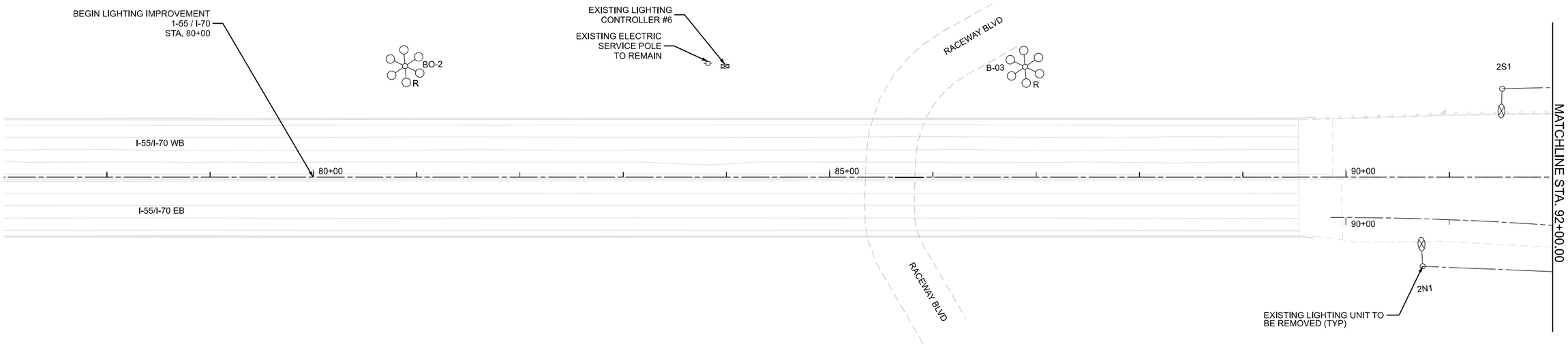

MODEL: $MODELNAMES
FILE NAME: D876E84-I5570-sht-RdyLgtPln-03.dgn

Jacobs
525 West Monroe
Suite 1600
Chicago, IL 60661
(312) 251-3000

USER NAME = jacobspw18ics04$	DESIGNED -	REVISED -	
	DRAWN -	REVISED -	
PLOT SCALE = 0.16666667 ' / in.	CHECKED -	REVISED -	
PLOT DATE = 10/2/2025	DATE - 2025/10/03	REVISED -	

STATE OF ILLINOIS
DEPARTMENT OF TRANSPORTATION

LIGHTING REMOVAL PLANS
I–55 / I–70 AT IL 203

SCALE: 1" = 50' | SHEET 3 OF 31 SHEETS | STA. TO STA.

F.A.I. RTE.	SECTION	COUNTY	TOTAL SHEETS	SHEET NO.
70	Section82-(5,6)RS-2, 60-6RS-2	MADISON & ST. CLAIR	678	343
		CONTRACT NO. 76E84		
		ILLINOIS	FED. AID PROJECT	

NOTES

1. EXISTING LIGHTING CABLES (NOT SHOWN) SHALL BE REMOVED. CONDUITS CAN BE ABANDONED.

2. POLES TO BE RELOCATED SHALL BE REMOVED, AND SAFELY STORED BY CONTRACTOR. PROPOSED LIGHTING PLANS ILLUSTRATE LOCATIONS WHERE LIGHTING UNITS TO BE RELOCATED ARE TO BE PLACED.

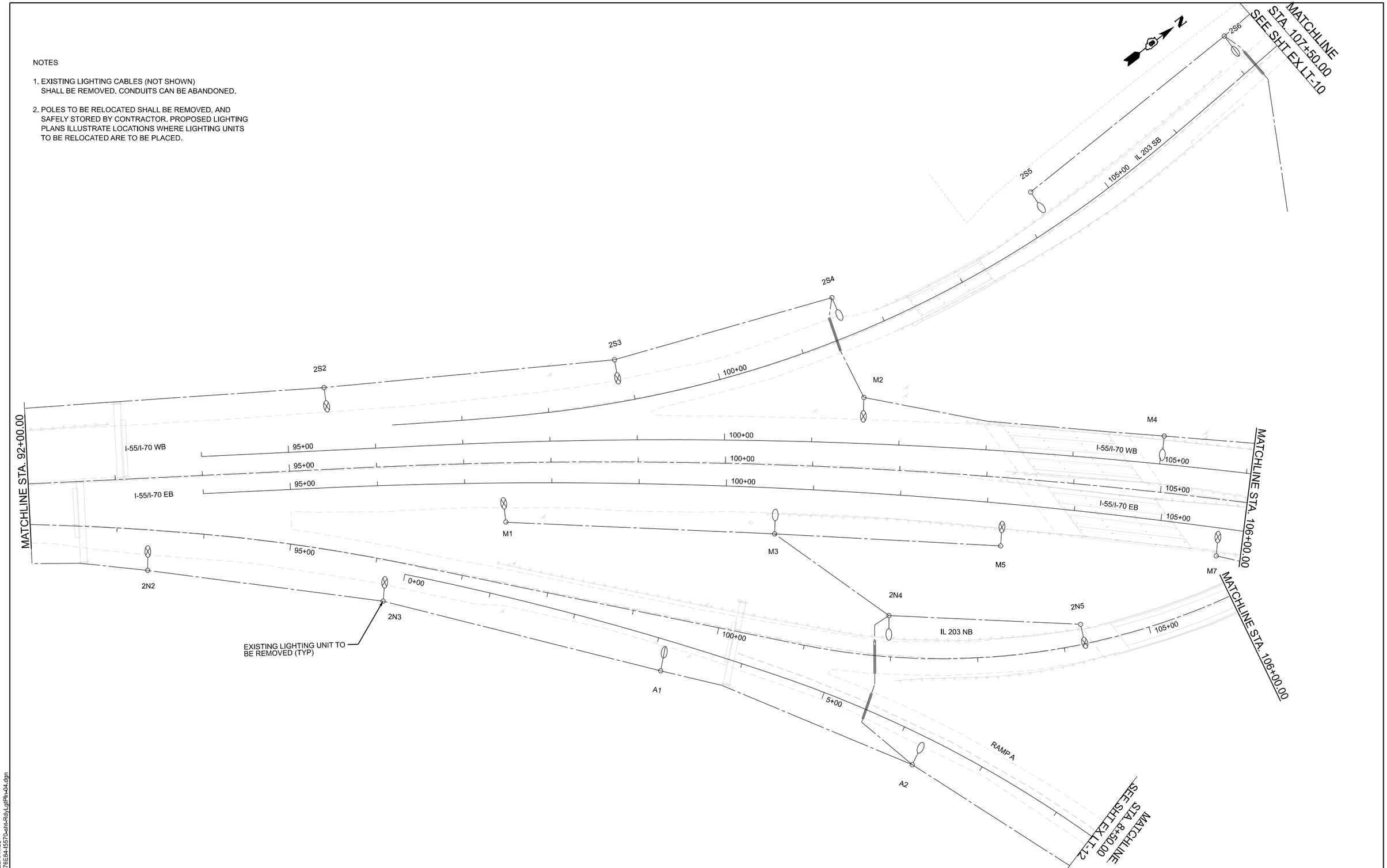

MODEL: $MODELNAME$
FILE NAME: D876E84-I5570-sht-Rdy-LgtPln-04.dgn

Jacobs
525 West Monroe
Suite 1600
Chicago, IL 60661
(312) 251-3000

USER NAME = jacobspw18lcs01$	DESIGNED -	REVISED -	
	DRAWN -	REVISED -	
PLOT SCALE = 0.16666667 ' / in.	CHECKED -	REVISED -	
PLOT DATE = 10/2/2025	DATE - 2025/10/03	REVISED -	

STATE OF ILLINOIS
DEPARTMENT OF TRANSPORTATION

LIGHTING REMOVAL PLANS
I–55 / I–70 AT IL 203

SCALE: 1" = 50' | SHEET 4 OF 31 SHEETS | STA. | TO STA.

F.A.I. RTE.	SECTION	COUNTY	TOTAL SHEETS	SHEET NO.
70	Section82-(5,6)RS-2, 60-6RS-2	MADISON & ST. CLAIR	678	344

CONTRACT NO. 76E84

ILLINOIS | FED. AID PROJECT

NOTES

1. EXISTING LIGHTING CABLES (NOT SHOWN) SHALL BE REMOVED. CONDUITS CAN BE ABANDONED.

2. POLES TO BE RELOCATED SHALL BE REMOVED, AND SAFELY STORED BY CONTRACTOR. PROPOSED LIGHTING PLANS ILLUSTRATE LOCATIONS WHERE LIGHTING UNITS TO BE RELOCATED ARE TO BE PLACED.

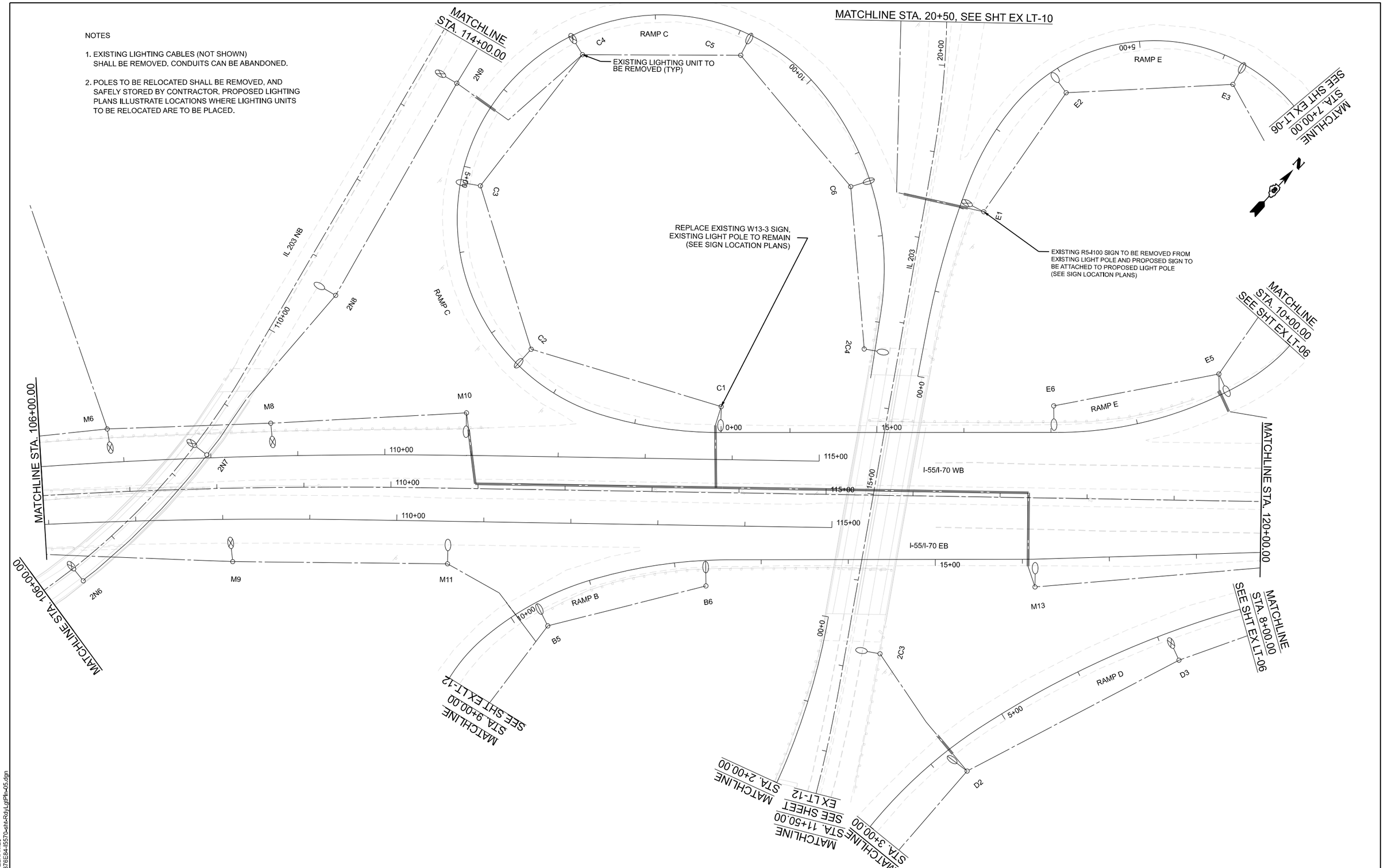

MODEL: $MODELNAMES
FILE NAME: D876E84-I5570-sht-Rdy\LgtPln-05.dgn

Jacobs
525 West Monroe
Suite 1600
Chicago, IL 60661
(312) 251-3000

USER NAME = jacobspw18lcs03$	DESIGNED -	REVISED -	
	DRAWN -	REVISED -	
PLOT SCALE = 0.16666667 ' / in.	CHECKED -	REVISED -	
PLOT DATE = 10/2/2025	DATE - 2025/10/03	REVISED -	

STATE OF ILLINOIS
DEPARTMENT OF TRANSPORTATION

LIGHTING REMOVAL PLANS
I–55 / I–70 AT IL 203

SCALE: 1" = 50' | SHEET 5 OF 31 SHEETS | STA. | TO STA.

F.A.I. RTE.	SECTION	COUNTY	TOTAL SHEETS	SHEET NO.
70	Section82-(5,6)RS-2, 60-6RS-2	MADISON & ST. CLAIR	678	345

CONTRACT NO. 76E84

ILLINOIS | FED. AID PROJECT

NOTES

1. EXISTING LIGHTING CABLES (NOT SHOWN) SHALL BE REMOVED. CONDUITS CAN BE ABANDONED.

2. POLES TO BE RELOCATED SHALL BE REMOVED, AND SAFELY STORED BY CONTRACTOR. PROPOSED LIGHTING PLANS ILLUSTRATE LOCATIONS WHERE LIGHTING UNITS TO BE RELOCATED ARE TO BE PLACED.

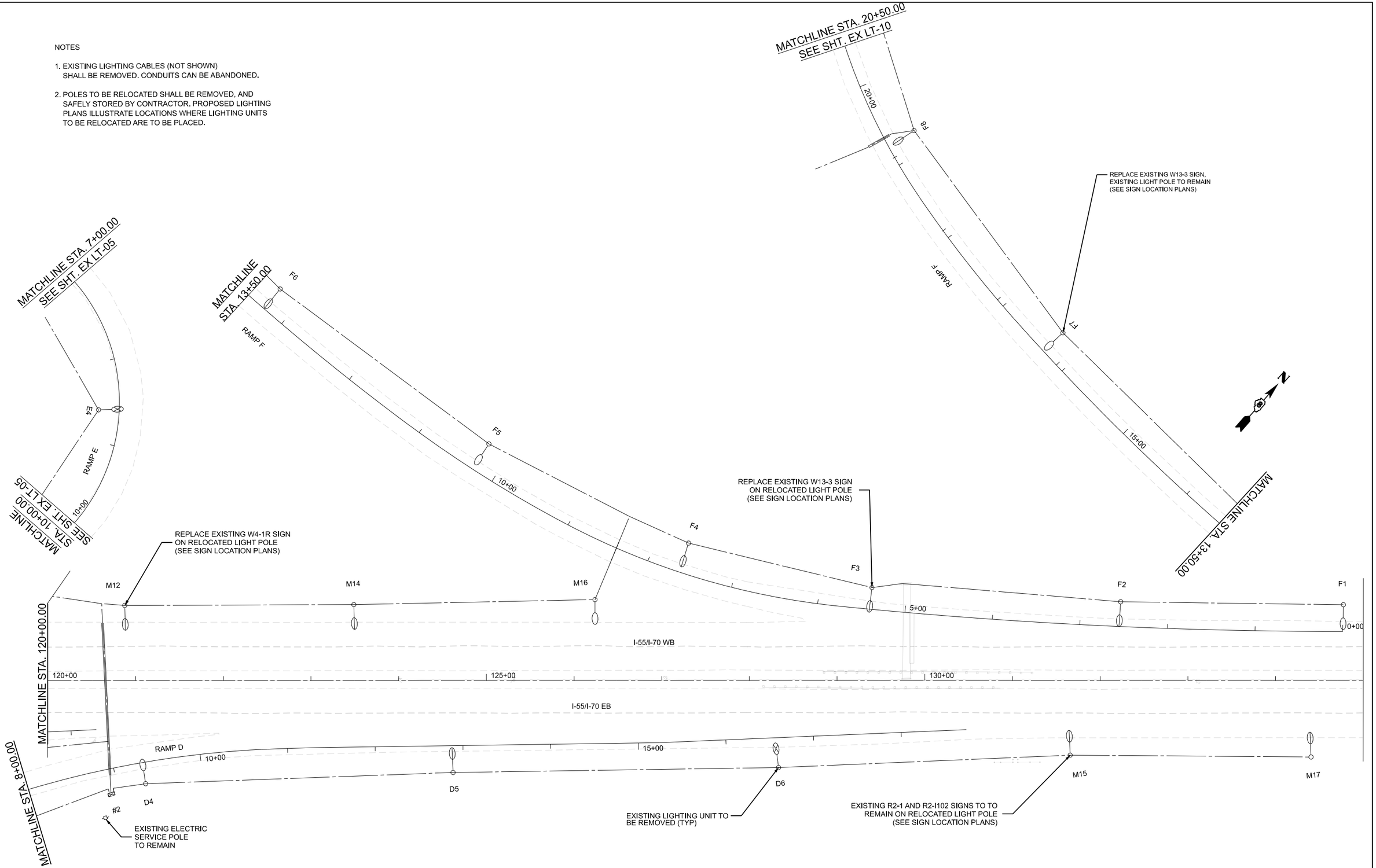

MODEL: $MODELNAME$
FILE NAME: D876E84-I5570-sht-Rdy-LightPln-06.dgn

Jacobs
525 West Monroe
Suite 1600
Chicago, IL 60661
(312) 251-3000

USER NAME = jacobspw18ics04$	DESIGNED -	REVISED -	
	DRAWN -	REVISED -	
PLOT SCALE = 0.16666667 ' / in.	CHECKED -	REVISED -	
PLOT DATE = 10/2/2025	DATE - 2025/10/03	REVISED -	

STATE OF ILLINOIS
DEPARTMENT OF TRANSPORTATION

LIGHTING REMOVAL PLANS
I-55 / I-70 AT IL 203

SCALE: 1" = 50' | SHEET 6 OF 31 SHEETS | STA. | TO STA.

F.A.I. RTE.	SECTION	COUNTY	TOTAL SHEETS	SHEET NO.
70	Section82-(5,6)RS-2, 60-6RS-2	MADISON & ST. CLAIR	678	346
		CONTRACT NO. 76E84		
		ILLINOIS	FED. AID PROJECT	

NOTES

1. EXISTING LIGHTING CABLES (NOT SHOWN) SHALL BE REMOVED. CONDUITS CAN BE ABANDONED.

2. POLES TO BE RELOCATED SHALL BE REMOVED, AND SAFELY STORED BY CONTRACTOR. PROPOSED LIGHTING PLANS ILLUSTRATE LOCATIONS WHERE LIGHTING UNITS TO BE RELOCATED ARE TO BE PLACED.

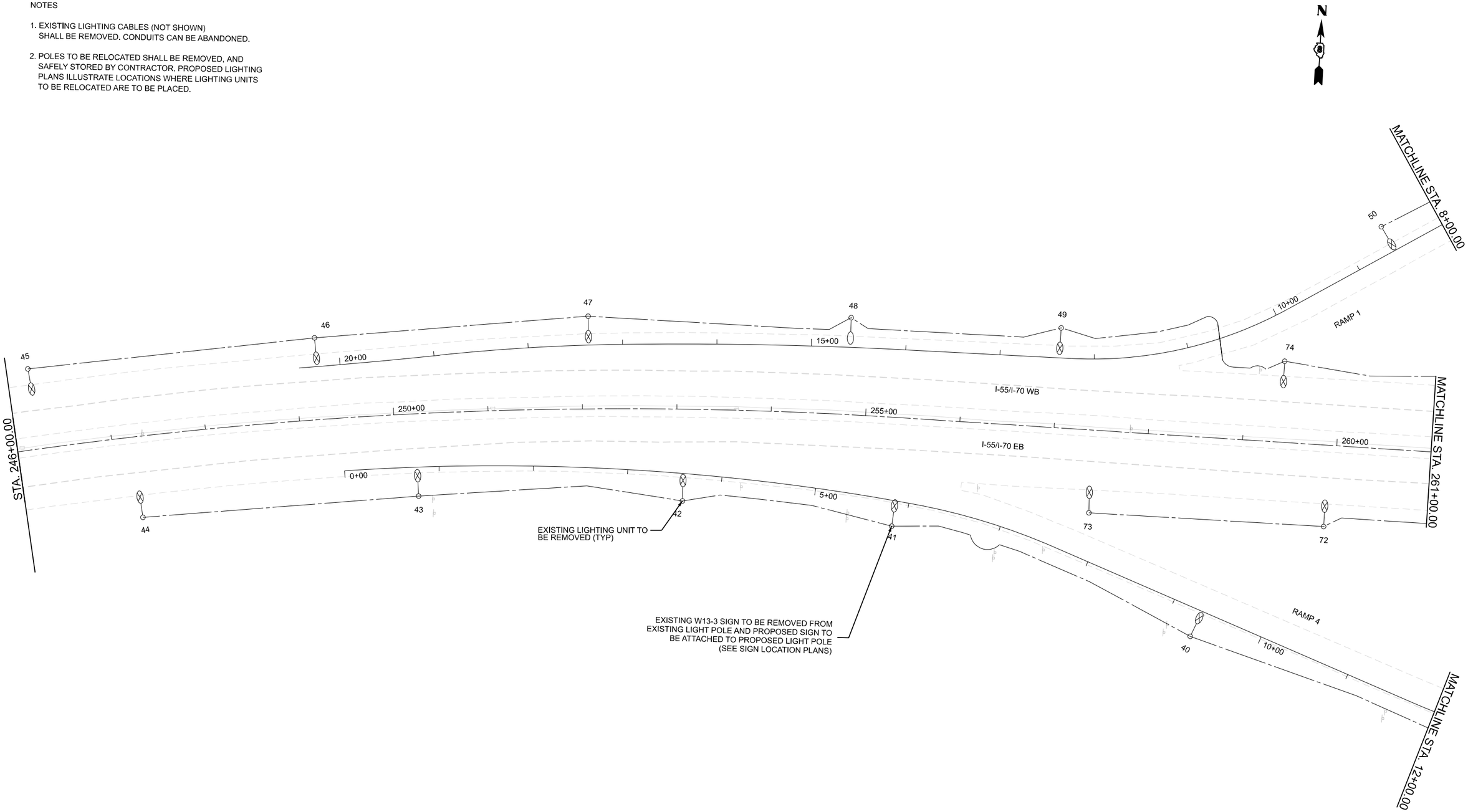

MODEL: $MODELNAMES
FILE NAME: D876E84-I5570-sht-RdyLgtPln-07.dgn

Jacobs
525 West Monroe
Suite 1600
Chicago, IL 60661
(312) 251-3000

USER NAME = jacobspw18ics04$	DESIGNED -	REVISED -	
	DRAWN -	REVISED -	
PLOT SCALE = 0.16666667 ' / in.	CHECKED -	REVISED -	
PLOT DATE = 10/2/2025	DATE - 2025/10/03	REVISED -	

STATE OF ILLINOIS
DEPARTMENT OF TRANSPORTATION

LIGHTING REMOVAL PLANS
I–55 / I–70 AT IL 203

SCALE: 1" = 50' | SHEET 7 OF 31 SHEETS | STA. | TO STA.

F.A.I. RTE.	SECTION	COUNTY	TOTAL SHEETS	SHEET NO.
70	Section82-(5,6)RS-2, 60-6RS-2	MADISON & ST. CLAIR	678	347
		CONTRACT NO. 76E84		
		ILLINOIS	FED. AID PROJECT	

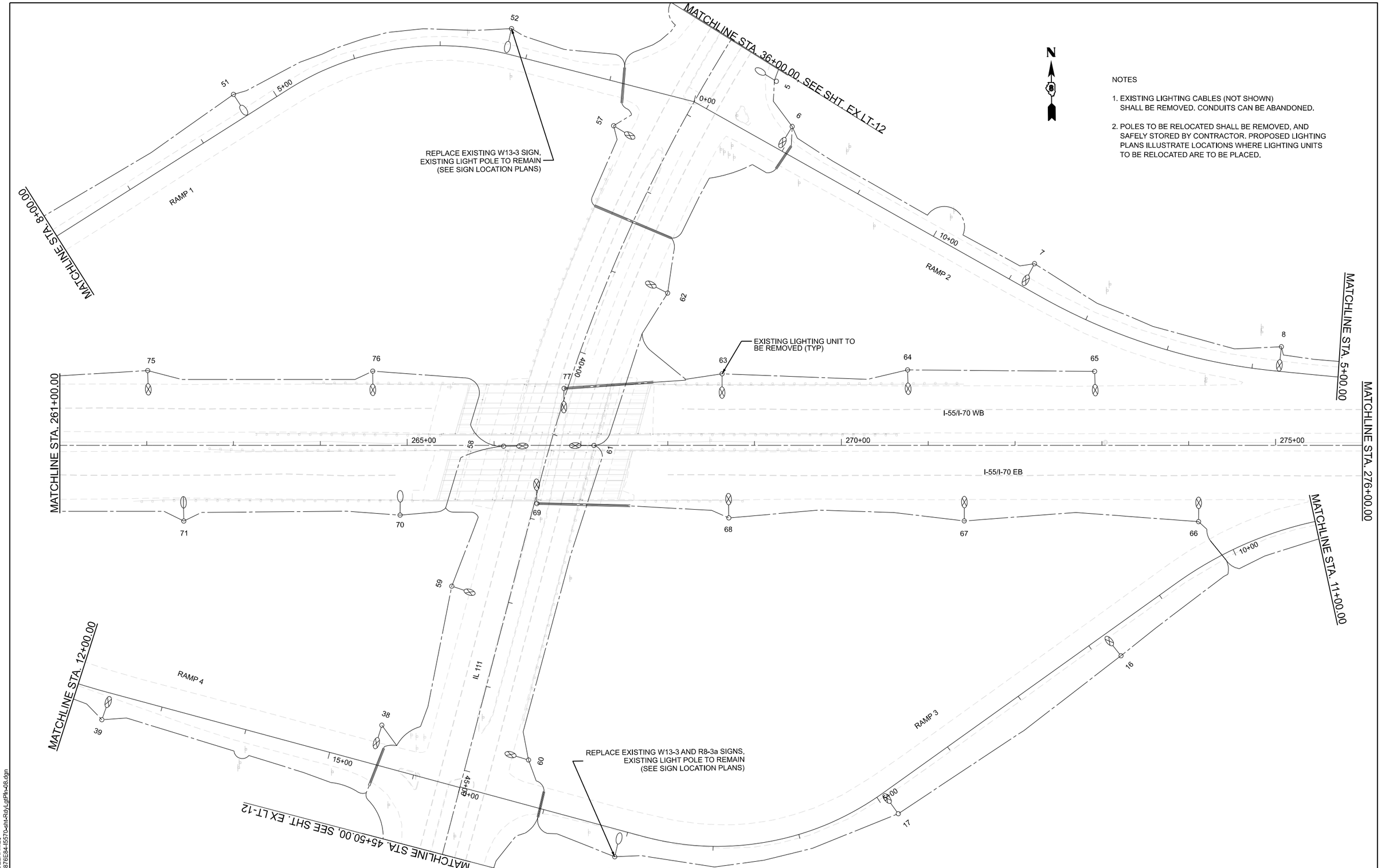

MODEL: $MODELNAMES
FILE NAME: D876E84-I5570-alt-Rdy-LgtPln-08.dgn

Jacobs
525 West Monroe
Suite 1600
Chicago, IL 60661
(312) 251-3000

USER NAME = jacobspw18lcs03$	DESIGNED -	REVISED -	
	DRAWN -	REVISED -	
PLOT SCALE = 0.16666667 ' / in.	CHECKED -	REVISED -	
PLOT DATE = 10/2/2025	DATE - 2025/10/03	REVISED -	

STATE OF ILLINOIS
DEPARTMENT OF TRANSPORTATION

LIGHTING REMOVAL PLANS
I–55 / I–70 AT IL 203

SCALE: 1" = 50' | SHEET 8 OF 31 SHEETS | STA. | TO STA.

F.A.I. RTE.	SECTION	COUNTY	TOTAL SHEETS	SHEET NO.
70	Section82-(5,6)RS-2, 60-6RS-2	MADISON & ST. CLAIR	678	348

CONTRACT NO. 76E84

ILLINOIS | FED. AID PROJECT

NOTES

1. EXISTING LIGHTING CABLES (NOT SHOWN) SHALL BE REMOVED. CONDUITS CAN BE ABANDONED.

2. POLES TO BE RELOCATED SHALL BE REMOVED, AND SAFELY STORED BY CONTRACTOR. PROPOSED LIGHTING PLANS ILLUSTRATE LOCATIONS WHERE LIGHTING UNITS TO BE RELOCATED ARE TO BE PLACED.

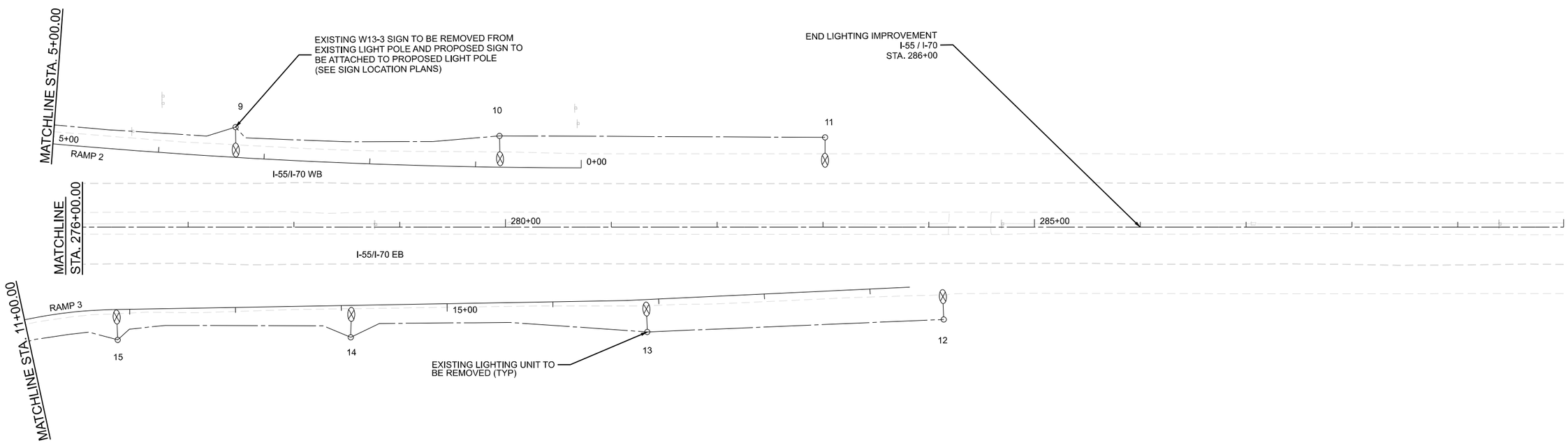

MODEL: $MODELNAMES
FILE NAME: D876E84-I5570-sht-RdyLgtPln-09.dgn

Jacobs 525 West Monroe Suite 1600 Chicago, IL 60661 (312) 251-3000	USER NAME = jacobspw18lcs01$	DESIGNED -	REVISED -	STATE OF ILLINOIS DEPARTMENT OF TRANSPORTATION	LIGHTING REMOVAL PLANS I–55 / I–70 AT IL 203
		DRAWN -	REVISED -		
	PLOT SCALE = 0.16666667 ' / in.	CHECKED -	REVISED -		
	PLOT DATE = 10/2/2025	DATE - 2025/10/03	REVISED -		SCALE: 1" = 50' SHEET 9 OF 31 SHEETS STA. TO STA.

F.A.I. RTE.	SECTION	COUNTY	TOTAL SHEETS	SHEET NO.
70	Section82-(5,6)RS-2, 60-6RS-2	MADISON & ST. CLAIR	678	349
		CONTRACT NO. 76E84		
		ILLINOIS	FED. AID PROJECT	

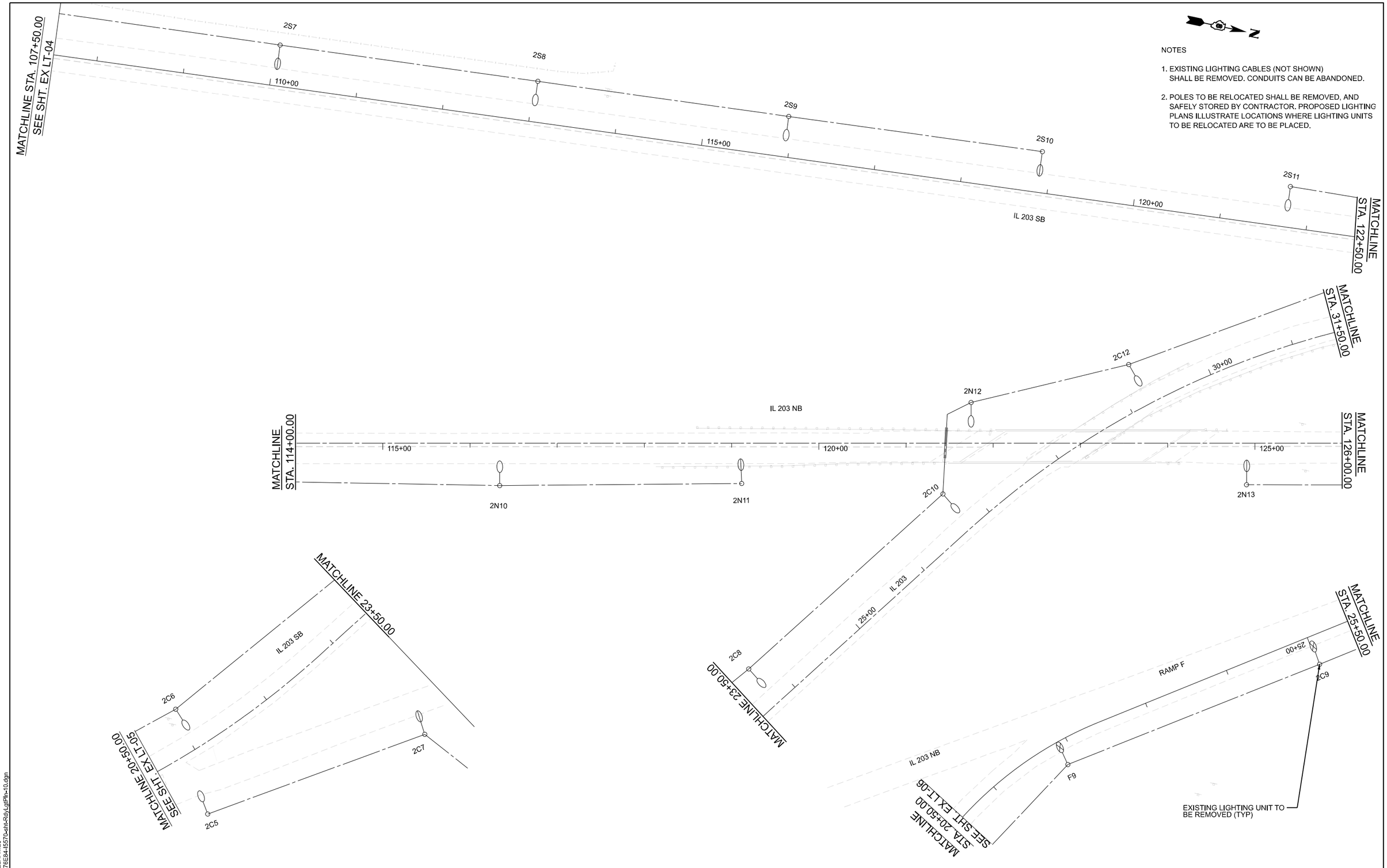

NOTES

1. EXISTING LIGHTING CABLES (NOT SHOWN) SHALL BE REMOVED. CONDUITS CAN BE ABANDONED.

2. POLES TO BE RELOCATED SHALL BE REMOVED, AND SAFELY STORED BY CONTRACTOR. PROPOSED LIGHTING PLANS ILLUSTRATE LOCATIONS WHERE LIGHTING UNITS TO BE RELOCATED ARE TO BE PLACED.

MODEL: $MODELNAMES
FILE NAME: D876E84-I5570-sht-RdyLgtPln-10.dgn

Jacobs
525 West Monroe
Suite 1600
Chicago, IL 60661
(312) 251-3000

USER NAME = jacobspw18ics01$	DESIGNED -	REVISED -	
	DRAWN -	REVISED -	
PLOT SCALE = 0.16666667 ' / in.	CHECKED -	REVISED -	
PLOT DATE = 10/3/2025	DATE - 2025/10/03	REVISED -	

STATE OF ILLINOIS
DEPARTMENT OF TRANSPORTATION

LIGHTING REMOVAL PLANS
I-55 / I-70 AT IL 203

SCALE: 1" = 50' | SHEET 10 OF 31 SHEETS | STA. | TO STA.

F.A.I. RTE.	SECTION	COUNTY	TOTAL SHEETS	SHEET NO.
70	Section82-(5,6)RS-2, 60-6RS-2	MADISON & ST. CLAIR	678	350

CONTRACT NO. 76E84

ILLINOIS | FED. AID PROJECT

NOTES

1. EXISTING LIGHTING CABLES (NOT SHOWN) SHALL BE REMOVED. CONDUITS CAN BE ABANDONED.

2. POLES TO BE RELOCATED SHALL BE REMOVED, AND SAFELY STORED BY CONTRACTOR. PROPOSED LIGHTING PLANS ILLUSTRATE LOCATIONS WHERE LIGHTING UNITS TO BE RELOCATED ARE TO BE PLACED.

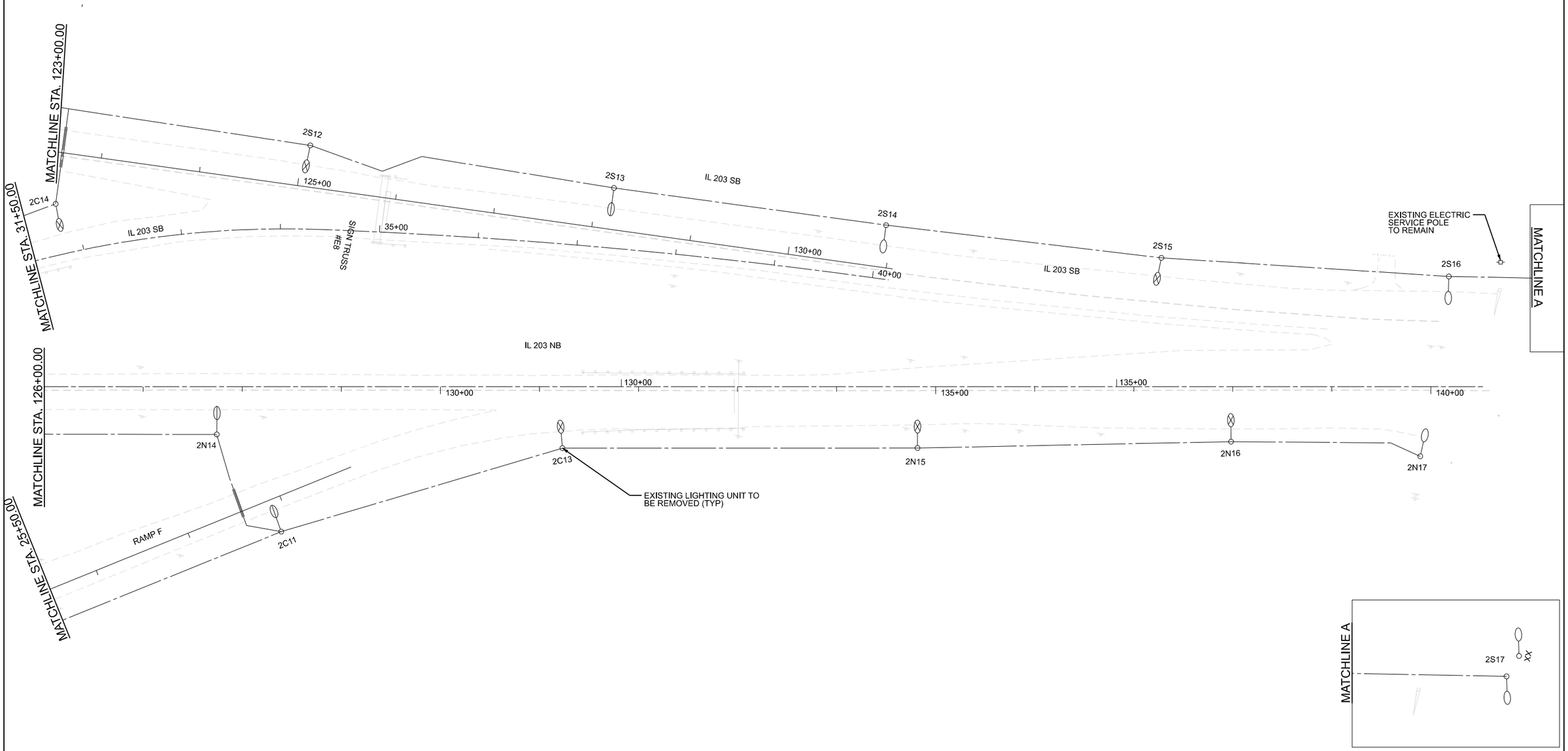

MODEL: $MODELNAMES
FILE NAME: D876E84-I5570-sthl-Rdy\LgtPln-1.dgn

Jacobs
525 West Monroe
Suite 1600
Chicago, IL 60661
(312) 251-3000

USER NAME = jacobspw18lcs01$	DESIGNED -	REVISED -	
	DRAWN -	REVISED -	
PLOT SCALE = 0.16666667 ' / in.	CHECKED -	REVISED -	
PLOT DATE = 10/2/2025	DATE - 2025/10/03	REVISED -	

STATE OF ILLINOIS
DEPARTMENT OF TRANSPORTATION

LIGHTING REMOVAL PLANS
I–55 / I–70 AT IL 203

SCALE: 1" = 50' | SHEET 11 OF 31 SHEETS | STA. | TO STA.

F.A.I. RTE.	SECTION	COUNTY	TOTAL SHEETS	SHEET NO.
70	Section82-(5,6)RS-2, 60-6RS-2	MADISON & ST. CLAIR	678	351
		CONTRACT NO. 76E84		
		ILLINOIS	FED. AID PROJECT	

NOTES

1. EXISTING LIGHTING CABLES (NOT SHOWN) SHALL BE REMOVED. CONDUITS CAN BE ABANDONED.

2. POLES TO BE RELOCATED SHALL BE REMOVED, AND SAFELY STORED BY CONTRACTOR. PROPOSED LIGHTING PLANS ILLUSTRATE LOCATIONS WHERE LIGHTING UNITS TO BE RELOCATED ARE TO BE PLACED.

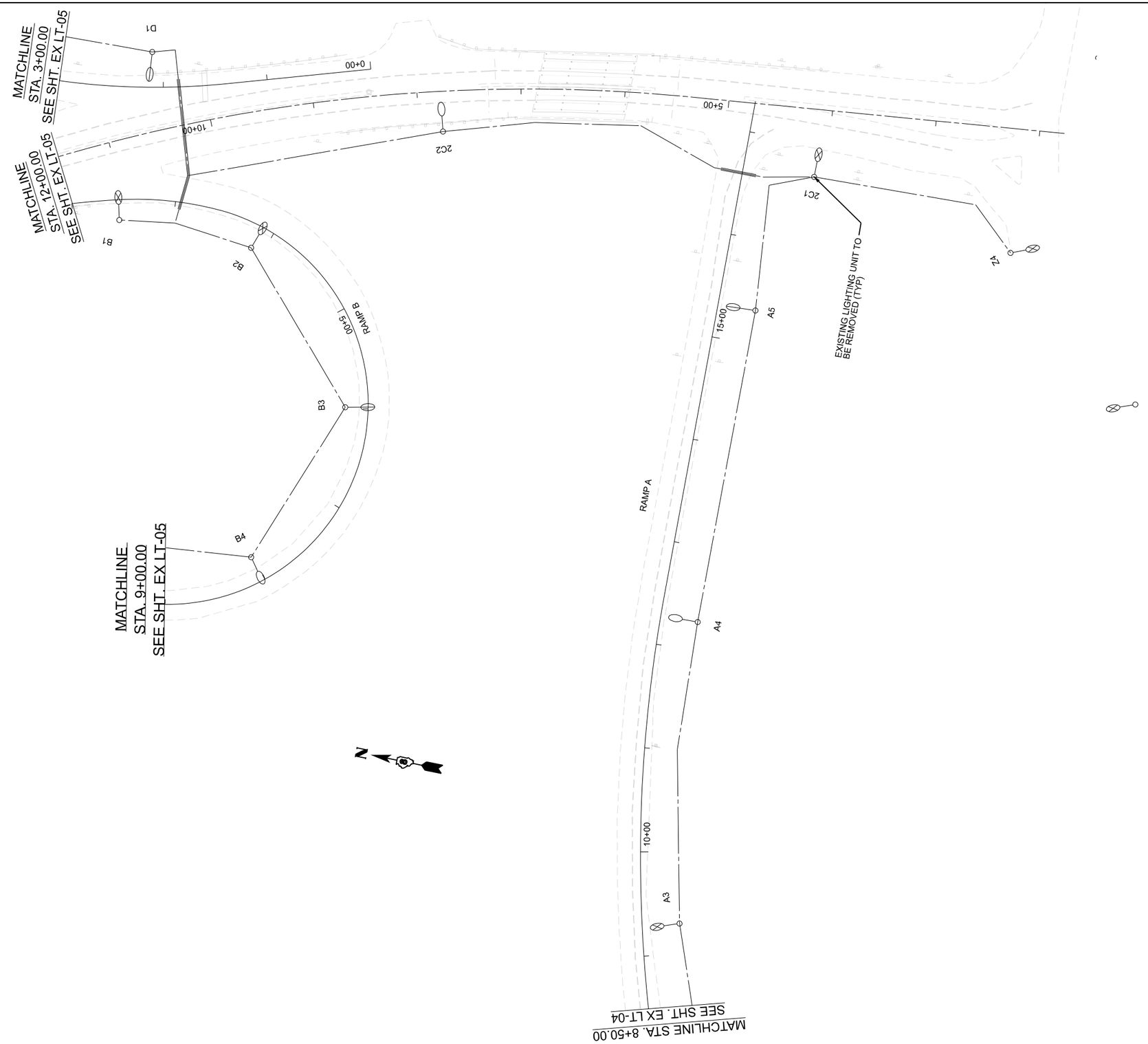

MODEL: $MODELNAMES
FILE NAME: D876E84-I5570-sht-RdyLgtPln-12.dgn

Jacobs
525 West Monroe
Suite 1600
Chicago, IL 60661
(312) 251-3000

USER NAME = jacobspw18lcs03$	DESIGNED -	REVISED -	
	DRAWN -	REVISED -	
PLOT SCALE = 0.16666667 ' / in.	CHECKED -	REVISED -	
PLOT DATE = 10/2/2025	DATE - 2025/10/03	REVISED -	

STATE OF ILLINOIS
DEPARTMENT OF TRANSPORTATION

LIGHTING REMOVAL PLANS
I-55 / I-70 AT IL 203

SCALE: 1" = 50' | SHEET 12 OF 31 SHEETS | STA. | TO STA.

F.A.I. RTE.	SECTION	COUNTY	TOTAL SHEETS	SHEET NO.
70	Section82-(5,6)RS-2, 60-6RS-2	MADISON & ST. CLAIR	678	352
		CONTRACT NO. 76E84		
		ILLINOIS	FED. AID PROJECT	

NOTES

1. EXISTING LIGHTING CABLES (NOT SHOWN) SHALL BE REMOVED. CONDUITS CAN BE ABANDONED.

2. POLES TO BE RELOCATED SHALL BE REMOVED, AND SAFELY STORED BY CONTRACTOR. PROPOSED LIGHTING PLANS ILLUSTRATE LOCATIONS WHERE LIGHTING UNITS TO BE RELOCATED ARE TO BE PLACED.

3. EXISTING CIRCUIT TO REMAIN IS CONNECTED TO EXISTING LIGHTING CONTROLLER

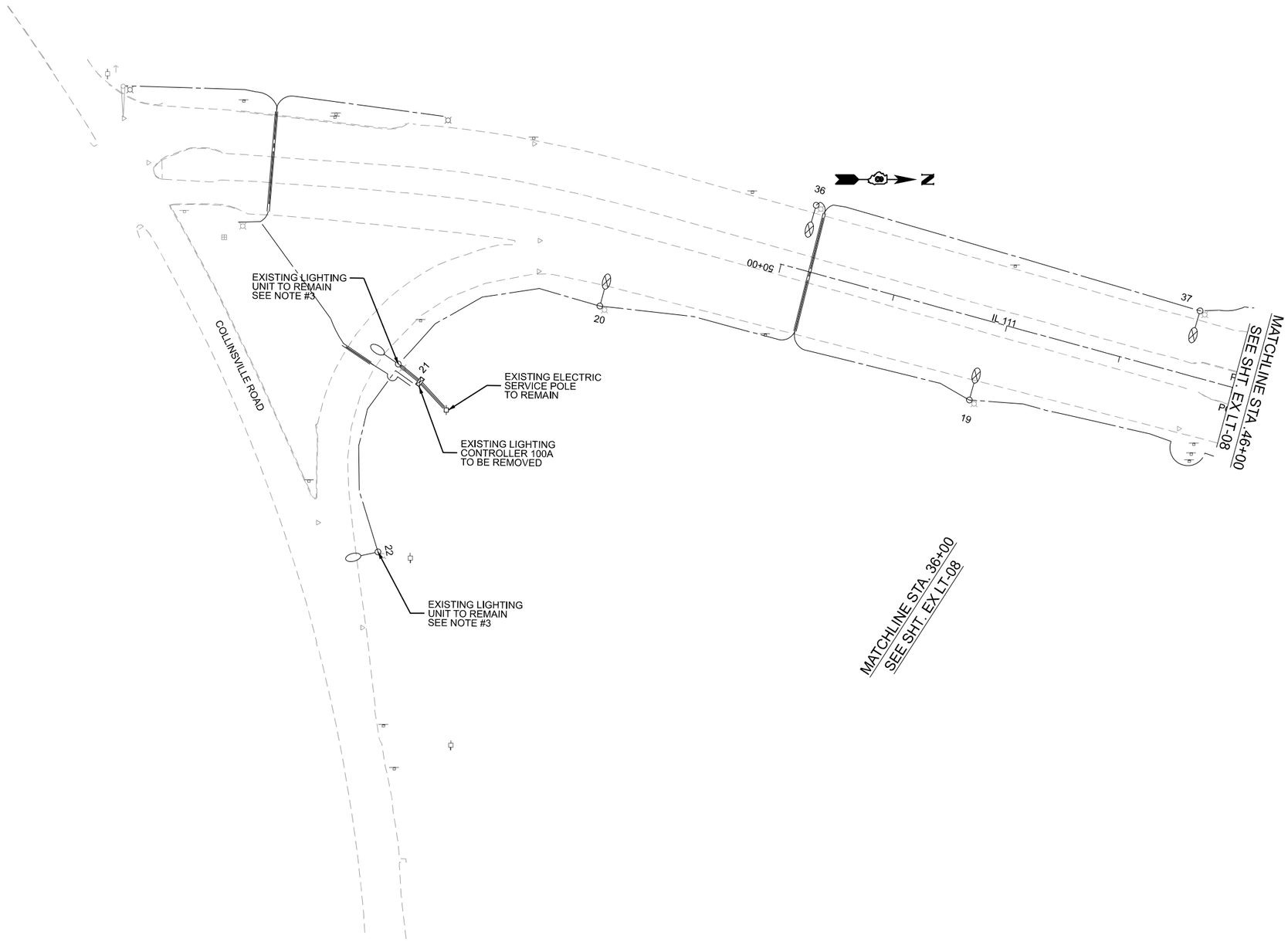

MODEL: $MODELNAMES
FILE NAME: D876E84-I5570-sht-Rdy-LgtPln-13.dgn

Jacobs
525 West Monroe
Suite 1600
Chicago, IL 60661
(312) 251-3000

USER NAME = jacobspw18lcs04$	DESIGNED -	REVISED -	
	DRAWN -	REVISED -	
PLOT SCALE = 0.16666667 ' / in.	CHECKED -	REVISED -	
PLOT DATE = 10/2/2025	DATE - 2025/10/03	REVISED -	

STATE OF ILLINOIS
DEPARTMENT OF TRANSPORTATION

LIGHTING REMOVAL PLANS
I-55 / I-70 AT IL 203

SCALE: 1" = 50' | SHEET 13 OF 31 SHEETS | STA. TO STA.

F.A.I. RTE.	SECTION	COUNTY	TOTAL SHEETS	SHEET NO.
70	Section82-(5,6)RS-2, 60-6RS-2	MADISON & ST. CLAIR	678	353
		CONTRACT NO. 76E84		
		ILLINOIS	FED. AID PROJECT	

NOTES

1. FOR GENERAL NOTES AND LEGENDS, SEE SHEET LT-01.

2. SETBACK IS 18 FT. FROM EDGE OF PAVEMENT TO CENTER OF LIGHT POLE, UNLESS NOTED OTHERWISE.

3. LOCATION OF PROPOSED UTILITY SERVICE POLE TO BE VERIFIED BY IDOT ENGINEER. CONTRACTOR SHALL ASSUME 300' TO SERVICE POLE LOCATIONS.

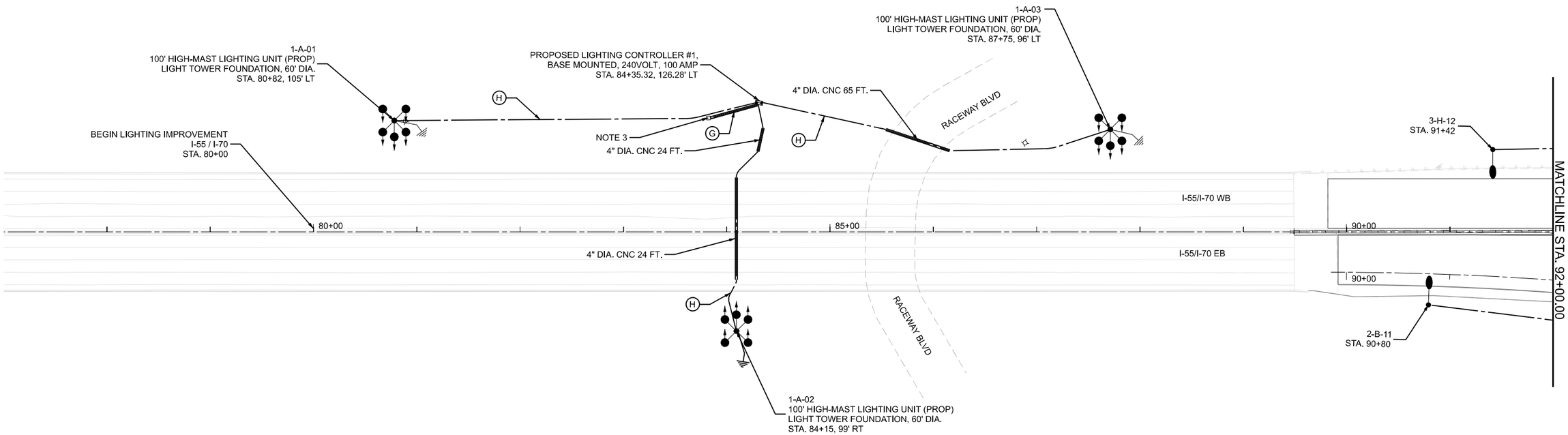

MODEL: $MODELNAMES
FILE NAME: D876E84-I5570-sht-RdyLgtPln-14.dgn

Jacobs
525 West Monroe
Suite 1600
Chicago, IL 60661
(312) 251-3000

USER NAME = Jacobspw18lcs04$	DESIGNED -	REVISED -
	DRAWN -	REVISED -
PLOT SCALE = 0.16666667 ' / in.	CHECKED -	REVISED -
PLOT DATE = 10/2/2025	DATE - 2025/10/03	REVISED -

STATE OF ILLINOIS
DEPARTMENT OF TRANSPORTATION

PROPOSED LIGHTING PLANS
I–55 / I–70 AT IL 203

SCALE: 1" = 50' | SHEET 14 OF 31 SHEETS | STA. | TO STA.

F.A.I. RTE.	SECTION	COUNTY	TOTAL SHEETS	SHEET NO.
70	Section82-(5,6)RS-2, 60-6RS-2	MADISON & ST. CLAIR	678	354

CONTRACT NO. 76E84

ILLINOIS | FED. AID PROJECT

NOTES

1. FOR GENERAL NOTES AND LEGENDS, SEE SHEET LT-01.

2. SETBACK IS 18 FT. FROM EDGE OF PAVEMENT TO CENTER OF LIGHT POLE, UNLESS NOTED OTHERWISE.

3. JUNCTION BOXES SHALL BE INSTALLED AT EACH END OF THE BRIDGE STRUCTURE TO TRANSITION FROM UNIT DUCT TO ELECTRIC CABLE IN CONDUIT

4. REMOVE EXISTING JUNCTION BOX

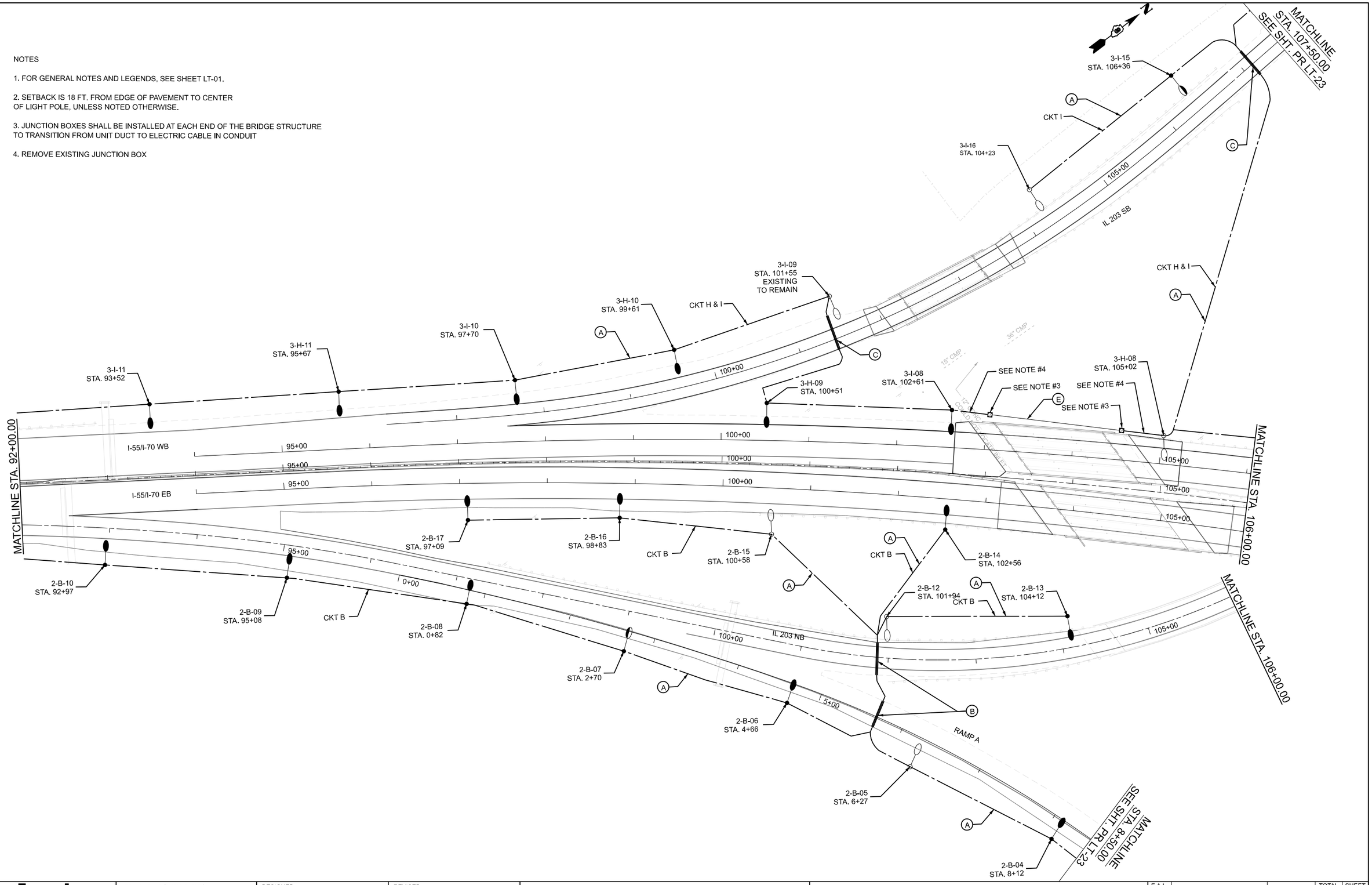

MODEL: $MODELNAMES
FILE NAME: D876E84-I5570-sht-Rdy_LgtPh-15.dgn

Jacobs
525 West Monroe
Suite 1600
Chicago, IL 60661
(312) 251-3000

USER NAME = jacobspw18lcs01$	DESIGNED -	REVISED -	
	DRAWN -	REVISED -	
PLOT SCALE = 0.16666667 ' / in.	CHECKED -	REVISED -	
PLOT DATE = 10/3/2025	DATE - 2025/10/03	REVISED -	

STATE OF ILLINOIS
DEPARTMENT OF TRANSPORTATION

PROPOSED LIGHTING PLANS
I-55 / I-70 AT IL 203

SCALE: 1" = 50' | SHEET 15 OF 31 SHEETS | STA. | TO STA.

F.A.I. RTE.	SECTION	COUNTY	TOTAL SHEETS	SHEET NO.
70	Section82-(5,6)RS-2, 60-6RS-2	MADISON & ST. CLAIR	678	355

CONTRACT NO. 76E84

ILLINOIS | FED. AID PROJECT

NOTES

1. FOR GENERAL NOTES AND LEGENDS, SEE SHEET LT-01.

2. SETBACK IS 18 FT. FROM EDGE OF PAVEMENT TO CENTER OF LIGHT POLE, UNLESS NOTED OTHERWISE.

3. JUNCTION BOX SHALL BE INSTALLED AT END OF THE BRIDGE STRUCTURE TO TRANSITION FROM UNIT DUCT TO ELECTRIC CABLE IN CONDUIT

4. REMOVE EXISTING JUNCTION BOX

5. PULL NEW CABLE THROUGH EXISTING CONDUIT THAT IS EMBEDDED IN WALL

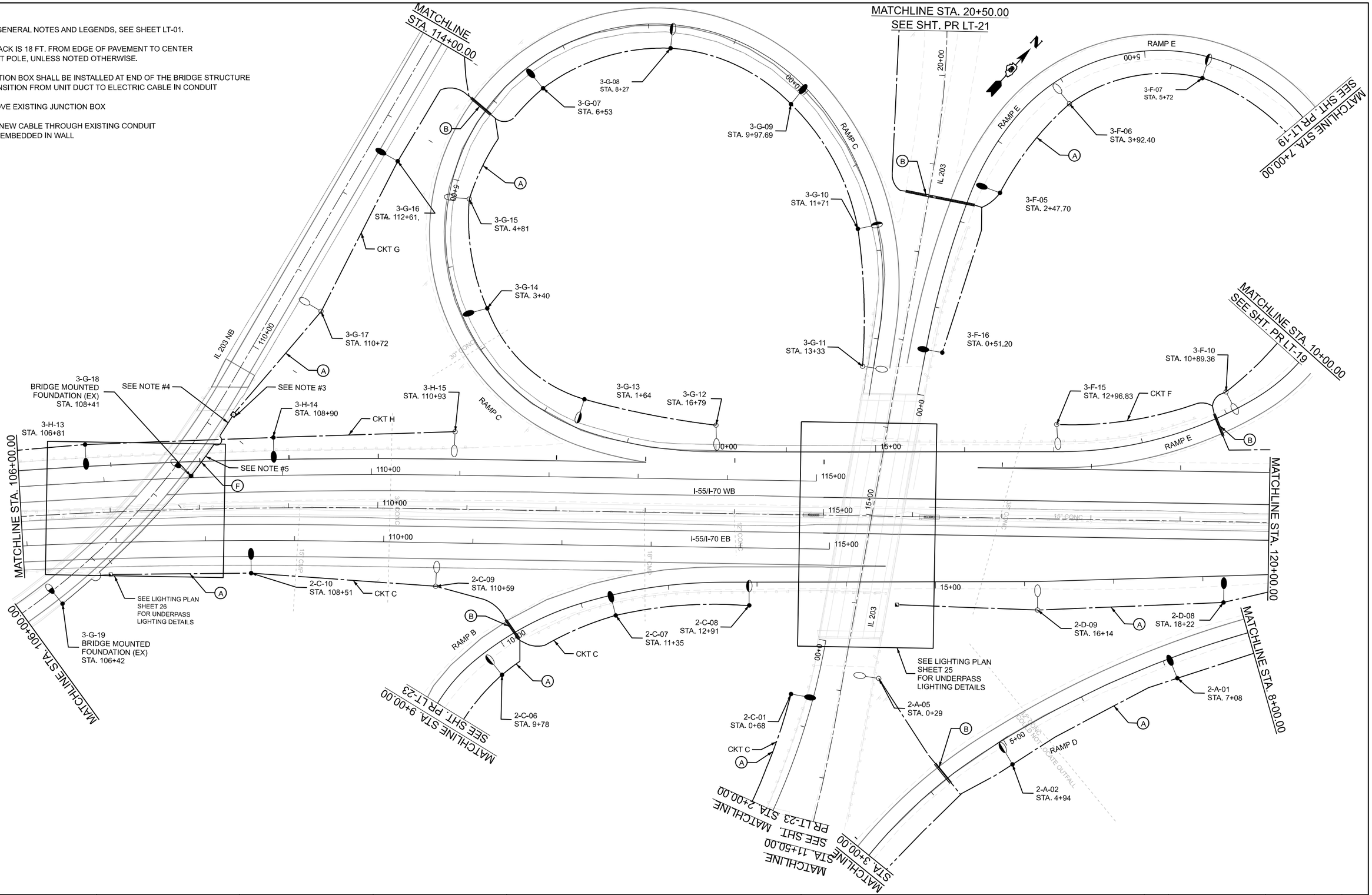

MODEL: $MODELNAME$
FILE NAME: D876E84-I5570-sht-Rdy\LgtPln-16.dgn

Jacobs
525 West Monroe
Suite 1600
Chicago, IL 60661
(312) 251-3000

USER NAME = jacobspw18lcs03$	DESIGNED -	REVISED -	
	DRAWN -	REVISED -	
PLOT SCALE = 0.16666667 ' / in.	CHECKED -	REVISED -	
PLOT DATE = 10/2/2025	DATE - 2025/10/03	REVISED -	

STATE OF ILLINOIS
DEPARTMENT OF TRANSPORTATION

PROPOSED LIGHTING PLANS
I-55 / I-70 AT IL 203

SCALE: 1" = 50' | SHEET 16 OF 31 SHEETS | STA. | TO STA.

F.A.I. RTE.	SECTION	COUNTY	TOTAL SHEETS	SHEET NO.
70	Section82-(5,6)RS-2, 60-6RS-2	MADISON & ST. CLAIR	678	356

CONTRACT NO. 76E84

ILLINOIS | FED. AID PROJECT

NOTES

1. FOR GENERAL NOTES AND LEGENDS, SEE SHEET LT-01.

2. SETBACK IS 18 FT. FROM EDGE OF PAVEMENT TO CENTER OF LIGHT POLE, UNLESS NOTED OTHERWISE.

3. CONTRACTOR SHALL LOCATE LIGHT UNITS OUTSIDE OF THE DITCH AT A HIGHER ELEVATION TO AVOID FLOODING

4. CONTRACTOR SHALL PLACE NEW LIGHTING CONTROLLER CLOSER TO THE ROADWAY AT A HIGHER ELEVATION TO AVOID FLOODING

5. LOCATION OF PROPOSED UTILITY SERVICE POLE TO BE VERIFIED BY IDOT ENGINEER. CONTRACTOR SHALL ASSUME 300' TO SERVICE POLE LOCATION.

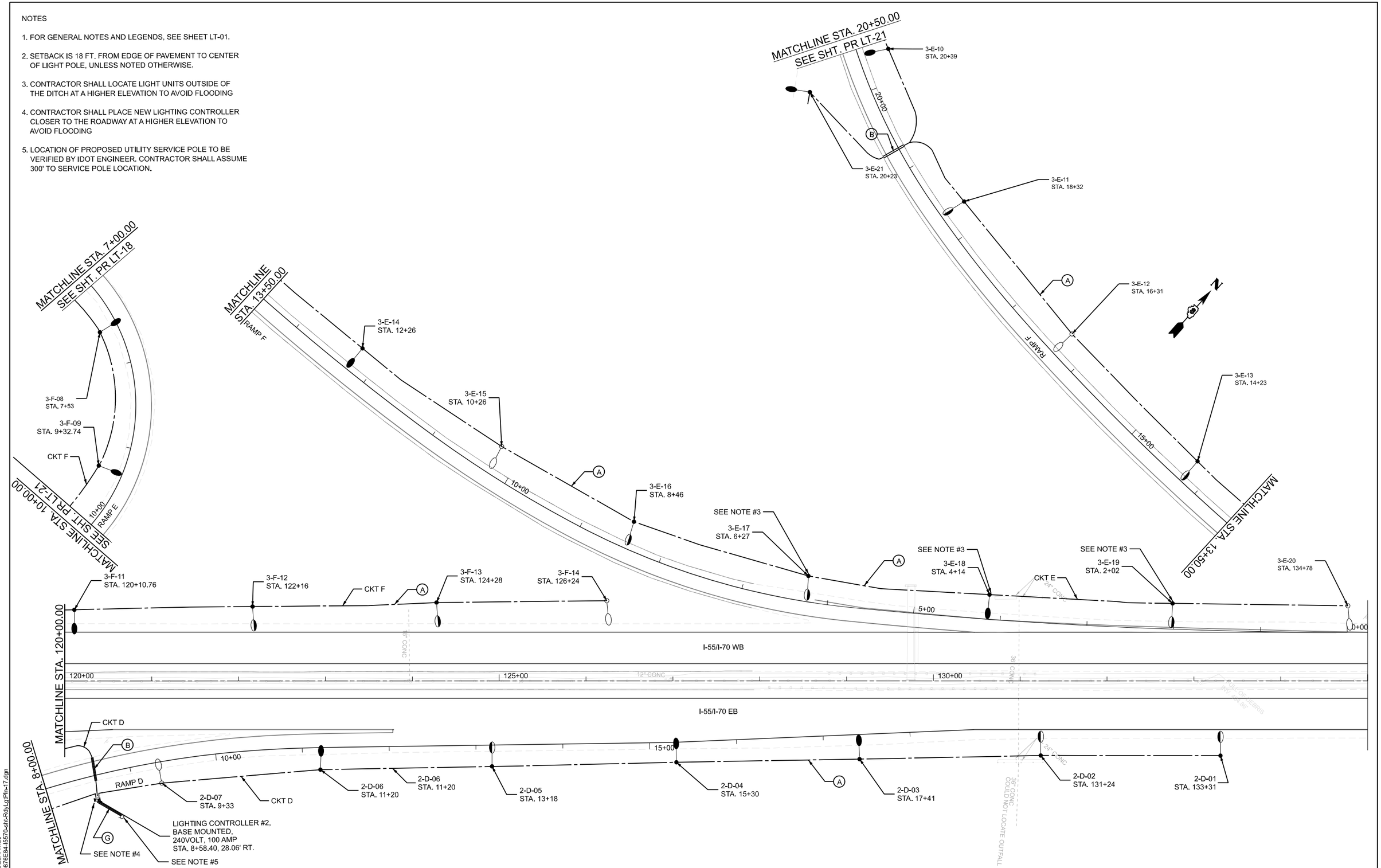

MODEL: $MODELNAME$
FILE NAME: D876E84-I5570-sht-RdyLgtPln-17.dgn

Jacobs
525 West Monroe
Suite 1600
Chicago, IL 60661
(312) 251-3000

USER NAME = jacobspw18ics03$	DESIGNED -	REVISED -	
	DRAWN -	REVISED -	
PLOT SCALE = 0.16666667 ' / in.	CHECKED -	REVISED -	
PLOT DATE = 10/2/2025	DATE - 2025/10/03	REVISED -	

STATE OF ILLINOIS
DEPARTMENT OF TRANSPORTATION

PROPOSED LIGHTING PLANS
I-55 / I-70 AT IL 203

SCALE: 1" = 50' | SHEET 17 OF 31 SHEETS | STA. | TO STA.

F.A.I. RTE.	SECTION	COUNTY	TOTAL SHEETS	SHEET NO.
70	Section82-(5,6)RS-2, 60-6RS-2	MADISON & ST. CLAIR	678	357
		CONTRACT NO. 76E84		
		ILLINOIS	FED. AID PROJECT	

NOTES

1. FOR GENERAL NOTES AND LEGENDS, SEE SHEET LT-01.

2. SETBACK IS 18 FT. FROM EDGE OF PAVEMENT TO CENTER OF LIGHT POLE, UNLESS NOTED OTHERWISE.

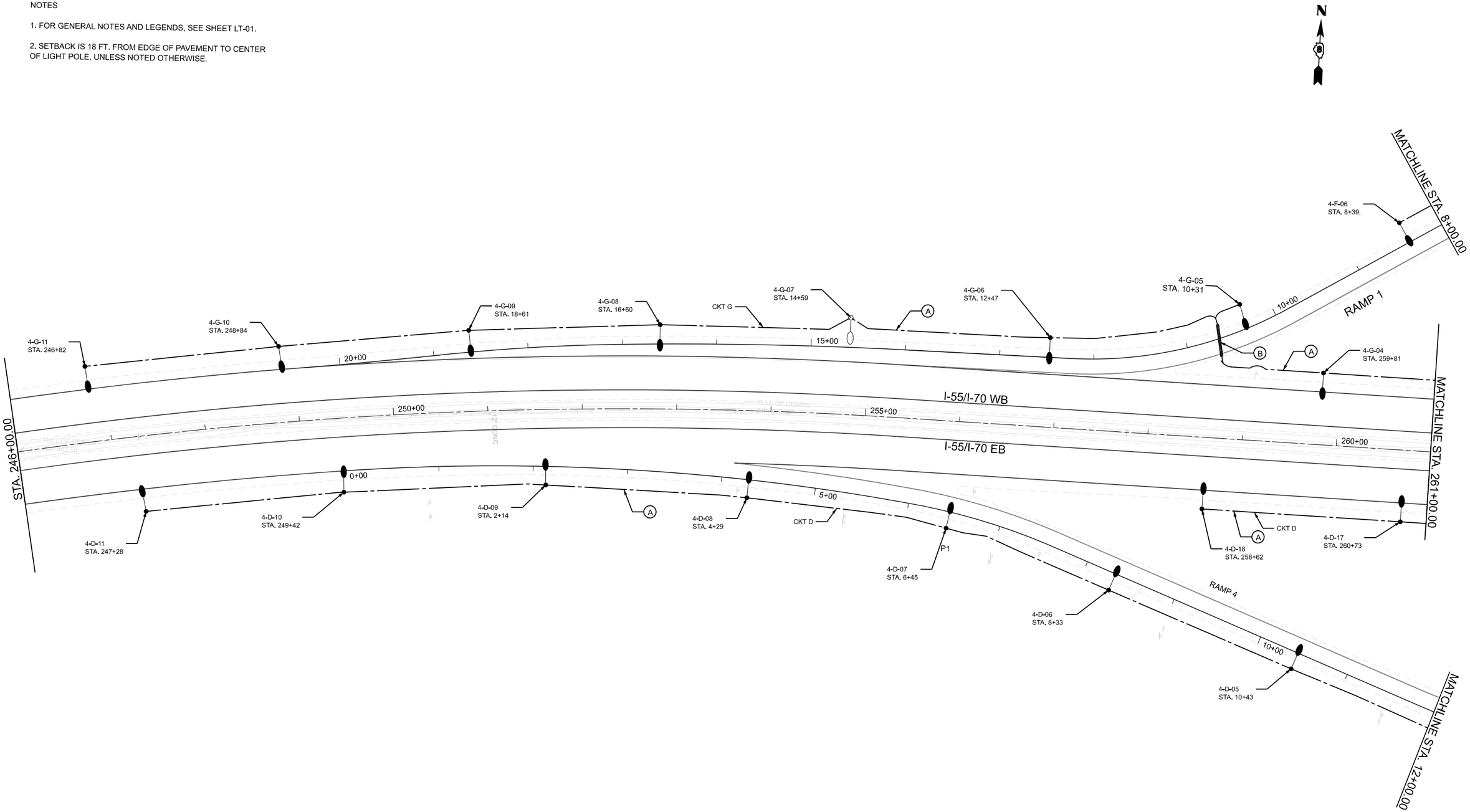

MODEL: $MODELNAMES
FILE NAME: D876E84-I5570-sht-RdyLgtPln-18.dgn

Jacobs
525 West Monroe
Suite 1600
Chicago, IL 60661
(312) 251-3000

USER NAME = jacobspw18lcs03$	DESIGNED -	REVISED -	
	DRAWN -	REVISED -	
PLOT SCALE = 0.16666667 ' / in.	CHECKED -	REVISED -	
PLOT DATE = 10/2/2025	DATE - 2025/10/03	REVISED -	

STATE OF ILLINOIS
DEPARTMENT OF TRANSPORTATION

PROPOSED LIGHTING PLANS
I-55 / I-70 AT IL 203

SCALE: 1" = 50' | SHEET 18 OF 31 SHEETS | STA. | TO STA.

F.A.I. RTE.	SECTION	COUNTY	TOTAL SHEETS	SHEET NO.
70	Section82-(5,6)RS-2, 60-6RS-2	MADISON & ST. CLAIR	678	358

CONTRACT NO. 76E84

ILLINOIS | FED. AID PROJECT

NOTES
1. FOR GENERAL NOTES AND LEGENDS, SEE SHEET LT-01.

2. SETBACK IS 18 FT. FROM EDGE OF PAVEMENT TO CENTER OF LIGHT POLE, UNLESS NOTED OTHERWISE.

3. JUNCTION BOXES SHALL BE INSTALLED AT END OF THE BRIDGE STRUCTURE TO TRANSITION FROM UNIT DUCT TO ELECTRIC CABLE IN CONDUIT

4. REMOVE EXISTING JUNCTION BOX

5. PULL NEW CABLE THROUGH EXISTING CONDUIT THAT IS EMBEDDED IN WALL

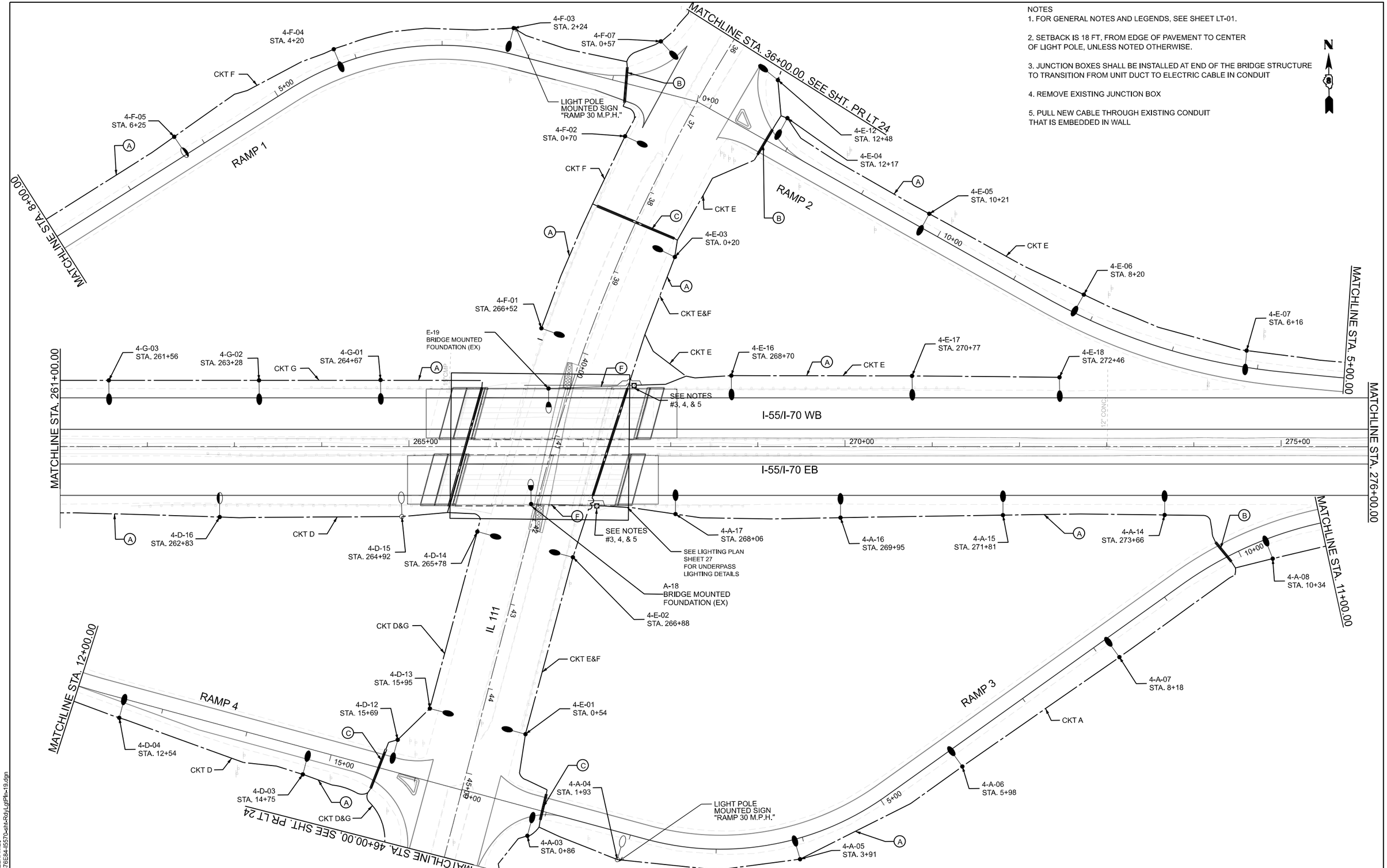

MODEL: $MODELNAMES
FILE NAME: D876E84-I5570-sht-Rdy-LgtPln-19.dgn

Jacobs
525 West Monroe
Suite 1600
Chicago, IL 60661
(312) 251-3000

USER NAME = jacobspw18lcs01$	DESIGNED -	REVISED -	
	DRAWN -	REVISED -	
PLOT SCALE = 0.16666667 ' / in.	CHECKED -	REVISED -	
PLOT DATE = 10/2/2025	DATE - 2025/10/03	REVISED -	

STATE OF ILLINOIS
DEPARTMENT OF TRANSPORTATION

PROPOSED LIGHTING PLANS
I-55 / I-70 AT IL 203

SCALE: 1" = 50' | SHEET 19 OF 31 SHEETS | STA. | TO STA.

F.A.I. RTE.	SECTION	COUNTY	TOTAL SHEETS	SHEET NO.
70	Section82-(5,6)RS-2, 60-6RS-2	MADISON & ST. CLAIR	678	359
		CONTRACT NO. 76E84		
		ILLINOIS	FED. AID PROJECT	

NOTES

1. FOR GENERAL NOTES AND LEGENDS, SEE SHEET LT-01.

2. SETBACK IS 18 FT. FROM EDGE OF PAVEMENT TO CENTER OF LIGHT POLE, UNLESS NOTED OTHERWISE.

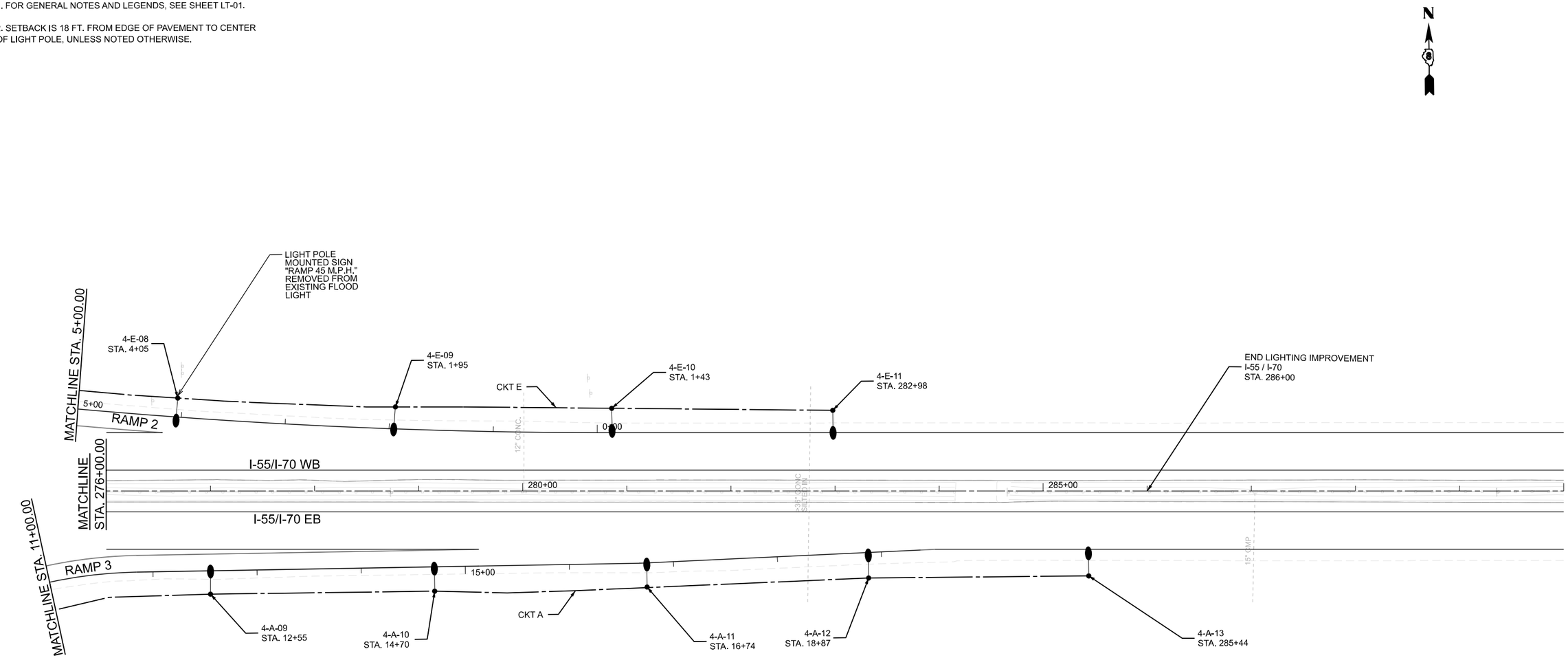

MODEL: $MODELNAMES
FILE NAME: D876E84-I5570-sht-RdyLgtPln-20.dgn

Jacobs 525 West Monroe Suite 1600 Chicago, IL 60661 (312) 251-3000	USER NAME = jacobspw18ics03$	DESIGNED -	REVISED -	STATE OF ILLINOIS DEPARTMENT OF TRANSPORTATION	PROPOSED LIGHTING PLANS I–55 / I–70 AT IL 203	F.A.I. RTE.	SECTION	COUNTY	TOTAL SHEETS / SHEET NO.
		DRAWN -	REVISED -			70	Section82-(5,6)RS-2, 60-6RS-2	MADISON & ST. CLAIR	678 / 360
	PLOT SCALE = 0.16666667 ' / in.	CHECKED -	REVISED -					CONTRACT NO. 76E84	
	PLOT DATE = 10/2/2025	DATE - 2025/10/03	REVISED -		SCALE: 1" = 50' SHEET 20 OF 31 SHEETS STA. TO STA.		ILLINOIS	FED. AID PROJECT	

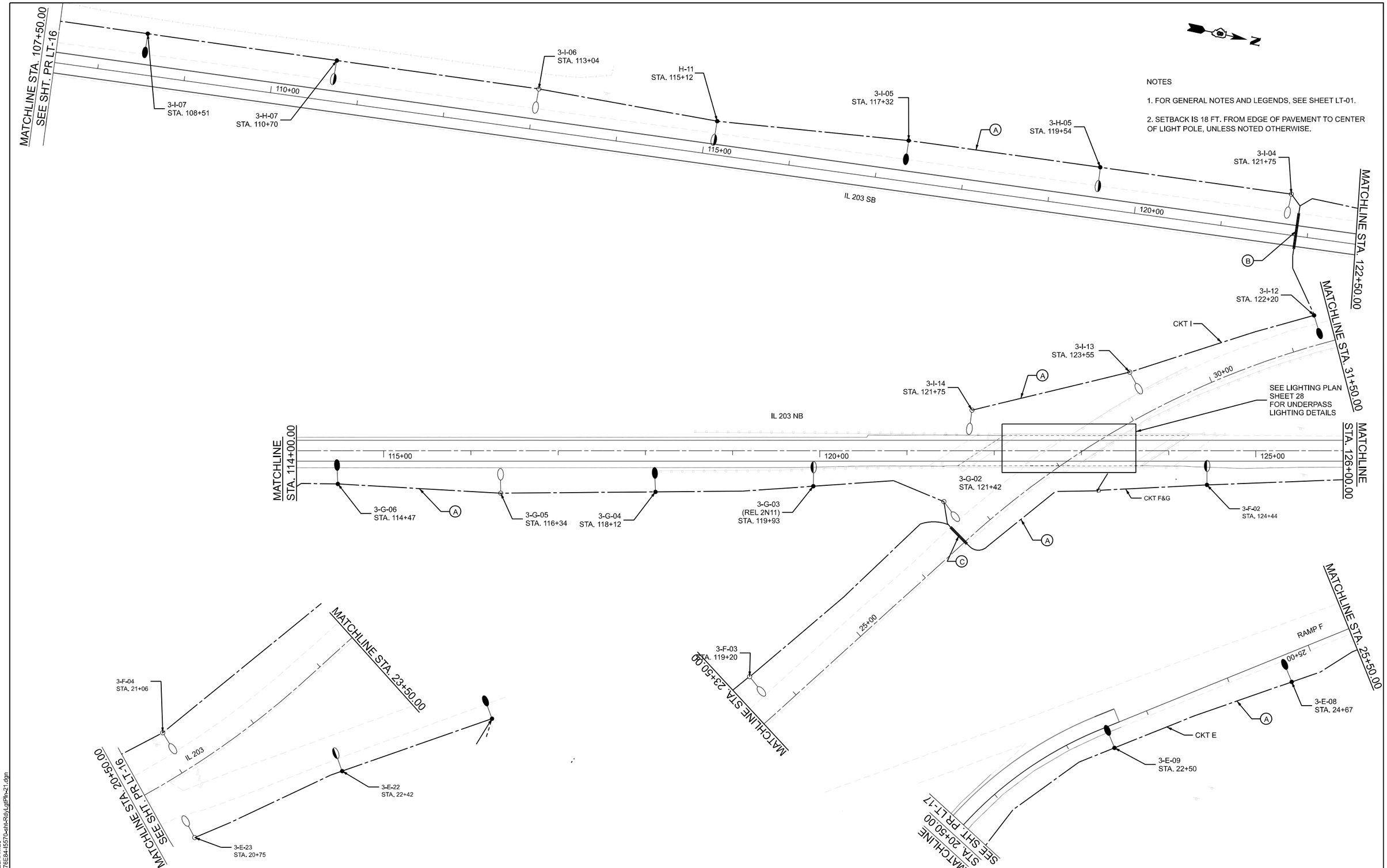

NOTES

1. FOR GENERAL NOTES AND LEGENDS, SEE SHEET LT-01.

2. SETBACK IS 18 FT. FROM EDGE OF PAVEMENT TO CENTER OF LIGHT POLE, UNLESS NOTED OTHERWISE.

MODEL: $MODELNAMES
FILE NAME: D876E84-I5570-sht-RdyLgtPln-21.dgn

Jacobs
525 West Monroe
Suite 1600
Chicago, IL 60661
(312) 251-3000

USER NAME = Jacobspw18lcs01$	DESIGNED -	REVISED -	
	DRAWN -	REVISED -	
PLOT SCALE = 0.16666667 ' / in.	CHECKED -	REVISED -	
PLOT DATE = 10/3/2025	DATE - 2025/10/03	REVISED -	

STATE OF ILLINOIS
DEPARTMENT OF TRANSPORTATION

PROPOSED LIGHTING PLANS
I-55 / I-70 AT IL 203

SCALE: 1" = 50' | SHEET 21 OF 31 SHEETS | STA. TO STA.

F.A.I. RTE.	SECTION	COUNTY	TOTAL SHEETS	SHEET NO.
70	Section82-(5,6)RS-2, 60-6RS-2	MADISON & ST. CLAIR	678	361
		CONTRACT NO. 76E84		
		ILLINOIS	FED. AID PROJECT	

NOTES

1. FOR GENERAL NOTES AND LEGENDS, SEE SHEET LT-01.

2. SETBACK IS 18 FT. FROM EDGE OF PAVEMENT TO CENTER OF LIGHT POLE, UNLESS NOTED OTHERWISE.

3. LOCATION OF PROPOSED UTILITY SERVICE POLE TO BE VERIFIED BY IDOT ENGINEER. CONTRACTOR SHALL ASSUME 300' TO SERVICE POLE LOCATIONS.

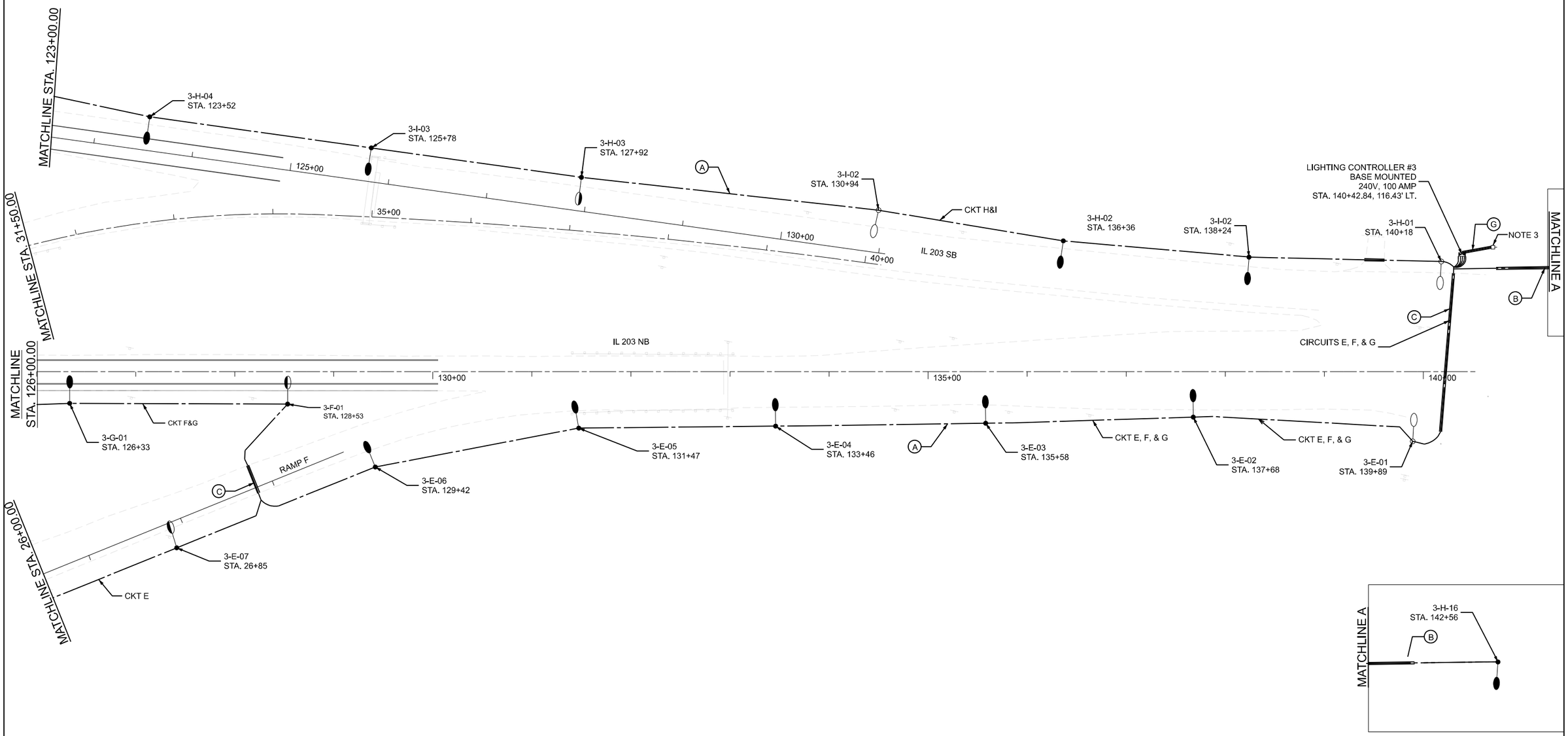

MODEL: $MODELNAMES
FILE NAME: D876E84-I5570-sht-Rdy-LgtPln-22.dgn

Jacobs
525 West Monroe
Suite 1600
Chicago, IL 60661
(312) 251-3000

USER NAME = jacobspw18lcs01$	DESIGNED -	REVISED -	
	DRAWN -	REVISED -	
PLOT SCALE = 0.16666667 ' / in.	CHECKED -	REVISED -	
PLOT DATE = 10/2/2025	DATE - 2025/10/03	REVISED -	

STATE OF ILLINOIS
DEPARTMENT OF TRANSPORTATION

PROPOSED LIGHTING PLANS
I-55 / I-70 AT IL 203

SCALE: 1" = 50' | SHEET 22 OF 31 SHEETS | STA. | TO STA.

F.A.I. RTE.	SECTION	COUNTY	TOTAL SHEETS	SHEET NO.
70	Section82-(5,6)RS-2, 60-6RS-2	MADISON & ST. CLAIR	678	362
		CONTRACT NO. 76E84		
		ILLINOIS	FED. AID PROJECT	

NOTES

1. FOR GENERAL NOTES AND LEGENDS, SEE SHEET LT-01.

2. SETBACK IS 18 FT. FROM EDGE OF PAVEMENT TO CENTER OF LIGHT POLE, UNLESS NOTED OTHERWISE.

3. JUNCTION BOXES SHALL BE INSTALLED AT END OF THE BRIDGE STRUCTURE TO TRANSITION FROM UNIT DUCT TO ELECTRIC CABLE IN CONDUIT

4. REMOVE EXISTING JUNCTION BOX

5. CONNECT EXISTING CIRCUIT TO NEW LIGHTING CONTROLLER #2

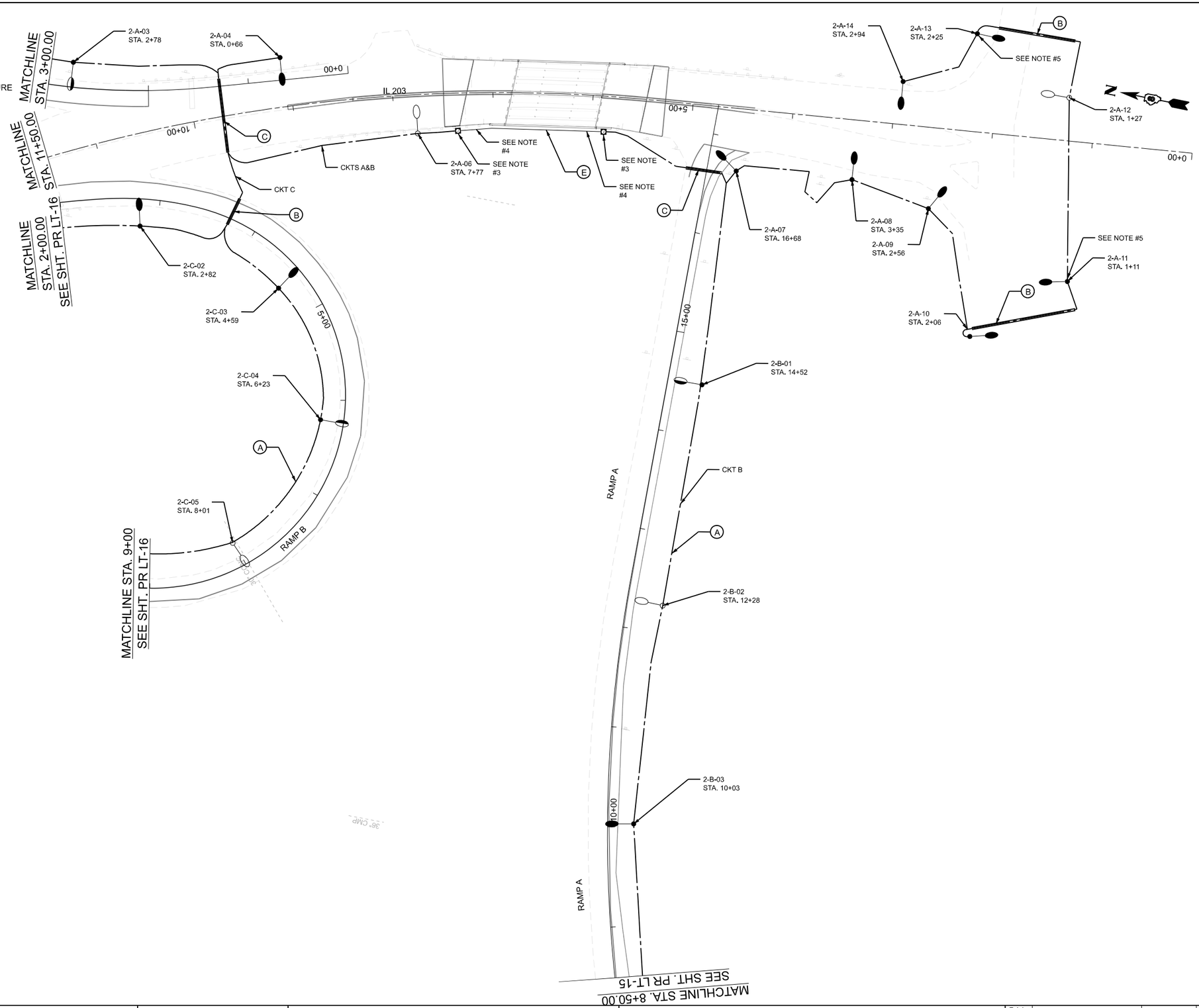

MODEL: $MODELNAMES
FILE NAME: D876E84-I5570-sht-RdyLgtPln-23.dgn

Jacobs
525 West Monroe
Suite 1600
Chicago, IL 60661
(312) 251-3000

USER NAME = jacobspw18ics03$	DESIGNED -	REVISED -	
	DRAWN -	REVISED -	
PLOT SCALE = 0.16666667 ' / in.	CHECKED -	REVISED -	
PLOT DATE = 10/2/2025	DATE - 2025/10/03	REVISED -	

STATE OF ILLINOIS
DEPARTMENT OF TRANSPORTATION

PROPOSED LIGHTING PLANS
I-55 / I-70 AT IL 203

SCALE: 1" = 50' | SHEET 23 OF 31 SHEETS | STA. | TO STA.

F.A.I. RTE.	SECTION	COUNTY	TOTAL SHEETS	SHEET NO.
70	Section82-(5,6)RS-2, 60-6RS-2	MADISON & ST. CLAIR	678	363

CONTRACT NO. 76E84

ILLINOIS | FED. AID PROJECT

NOTES
1. FOR GENERAL NOTES AND LEGENDS, SEE SHEET LT-01.

2. SETBACK IS 18 FT. FROM EDGE OF PAVEMENT TO CENTER OF LIGHT POLE, UNLESS NOTED OTHERWISE.

3. CONNECT EXISTING CIRCUIT TO NEW LIGHTING CONTROLLER #4

4.LOCATION OF PROPOSED UTILITY SERVICE POLE TO BE VERIFIED BY IDOT ENG. ASSUME 300' TO SERVICE POLE LOCATION.

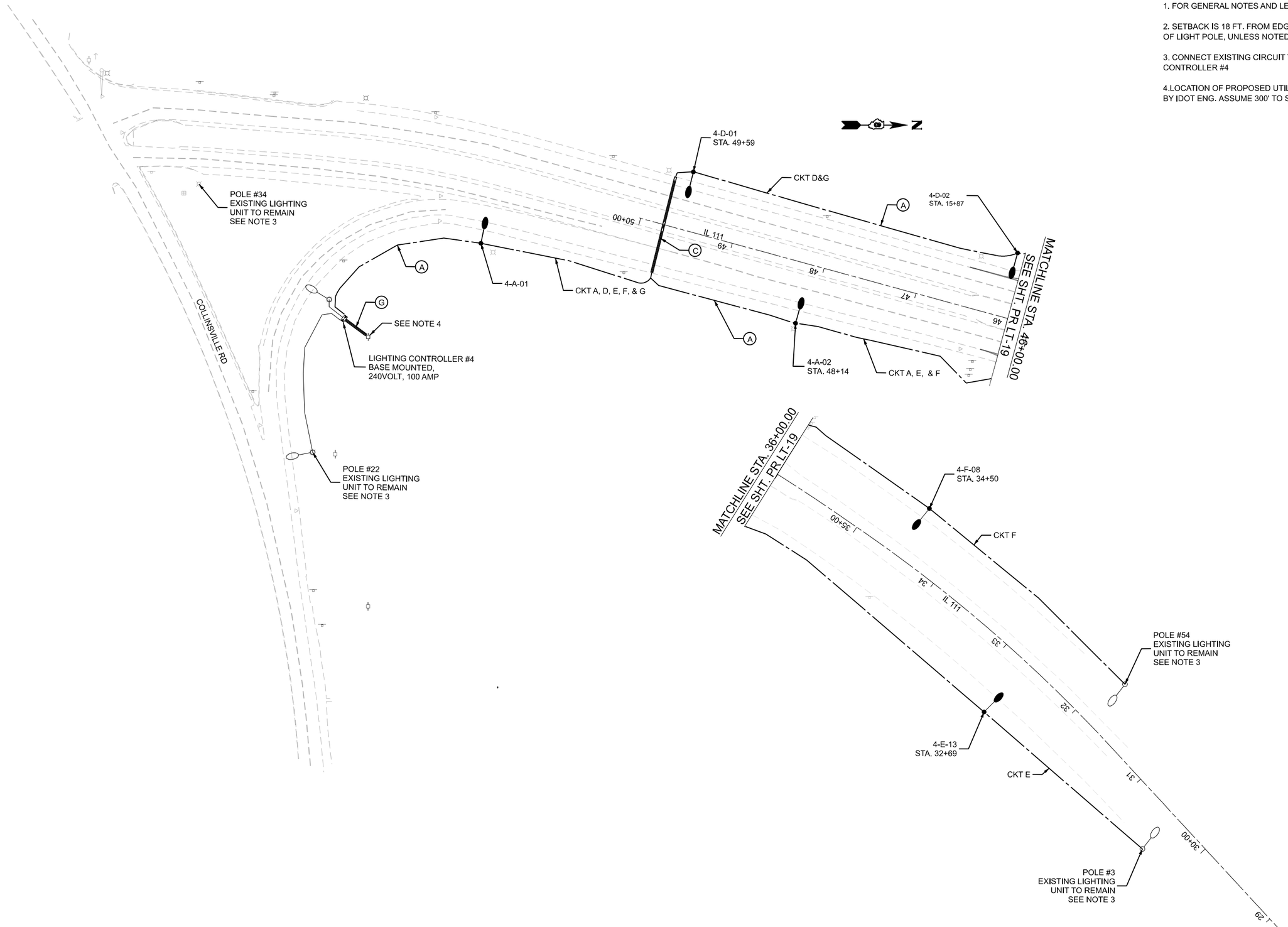

MODEL: $MODELNAMES
FILE NAME: D876E84-I5570-sht-RdyLgtPln-24.dgn

Jacobs
525 West Monroe
Suite 1600
Chicago, IL 60661
(312) 251-3000

USER NAME = jacobspw18lcs04$	DESIGNED -	REVISED -	
	DRAWN -	REVISED -	
PLOT SCALE = 0.16666667 ' / in.	CHECKED -	REVISED -	
PLOT DATE = 10/2/2025	DATE - 2025/10/03	REVISED -	

STATE OF ILLINOIS
DEPARTMENT OF TRANSPORTATION

PROPOSED LIGHTING PLANS
I–55 / I–70 AT IL 203

SCALE: 1" = 50' | SHEET 24 OF 31 SHEETS | STA. TO STA.

F.A.I. RTE.	SECTION	COUNTY	TOTAL SHEETS	SHEET NO.
70	Section82-(5,6)RS-2, 60-6RS-2	MADISON & ST. CLAIR	678	364

CONTRACT NO. 76E84

ILLINOIS | FED. AID PROJECT

UNDERPASS LEGEND

- PROPOSED STAINLESS STEEL JUNCTION BOX 6x6x4
- PROPOSED STAINLESS STEEL JUNCTION BOX 12x10x6
- PROPOSED STAINLESS STEEL JUNCTION BOX 18x18x8
- PROPOSED UNDERPASS LUMINAIRE, LED, OUTPUT DESIGNATION D, IES TYPE II, 240V

CALLOUT	DESCRIPTION
A	UNIT DUCT, 600V, 2-1C NO.8, 1/C NO.8 GROUND
B	UNIT DUCT, 600V, 2-1C NO.8, 1/C NO.8 GROUND, IN 2" STAINLESS STEEL CONDUIT
C	2-1C NO.10, 1/C NO.10 GROUND, IN 1" CONDUIT

NOTE: ROADWAY LIGHTING OMITTED FOR CLARITY
SEE PROPOSED LIGHTING PLAN SHEET #16

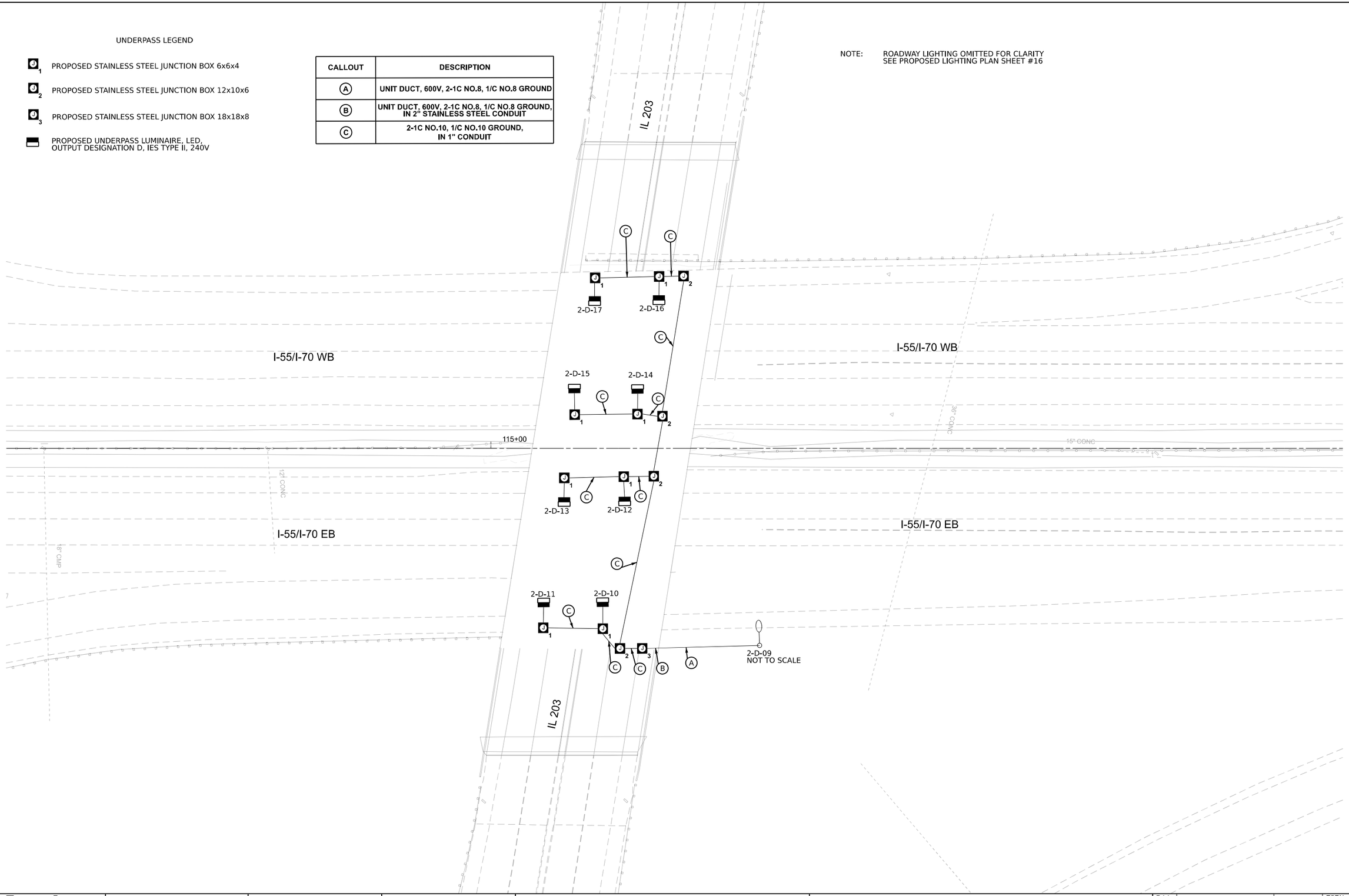

MODEL: $MODELNAME$
FILE NAME: D876E84-I557D-sht-Rdy_LgtPln-25_20_Scale.dgn

Jacobs
525 West Monroe
Suite 1600
Chicago, IL 60661
(312) 251-3000

USER NAME = jacobspw18lcs03$	DESIGNED -	REVISED -	
	DRAWN -	REVISED -	
PLOT SCALE = 0.16666667 ' / in.	CHECKED -	REVISED -	
PLOT DATE = 10/2/2025	DATE - 2025/10/03	REVISED -	

STATE OF ILLINOIS
DEPARTMENT OF TRANSPORTATION

PROPOSED UNDERPASS LIGHTING PLANS
I-55 / I-70 AT IL 203

SCALE: 1" = 20' | SHEET 25 OF 31 SHEETS | STA. | TO STA.

F.A.I. RTE.	SECTION	COUNTY	TOTAL SHEETS	SHEET NO.
70	Section82-(5,6)RS-2, 60-6RS-2	MADISON & ST. CLAIR	678	365
		CONTRACT NO. 76E84		
		ILLINOIS	FED. AID PROJECT	

UNDERPASS LEGEND

- PROPOSED STAINLESS STEEL JUNCTION BOX 6x6x4
- PROPOSED STAINLESS STEEL JUNCTION BOX 12x10x6
- PROPOSED STAINLESS STEEL JUNCTION BOX 18x18x8
- PROPOSED UNDERPASS LUMINAIRE, LED, OUTPUT DESIGNATION D, IES TYPE II, 240V

CALLOUT	DESCRIPTION
A	UNIT DUCT, 600V, 2-1C NO.8, 1/C NO.8 GROUND
B	UNIT DUCT, 600V, 2-1C NO.8, 1/C NO.8 GROUND, IN 2" STAINLESS STEEL CONDUIT
C	2-1C NO.10, 1/C NO.10 GROUND, IN 1" CONDUIT

NOTE: ROADWAY LIGHTING OMITTED FOR CLARITY
SEE PROPOSED LIGHTING PLAN SHEET #16

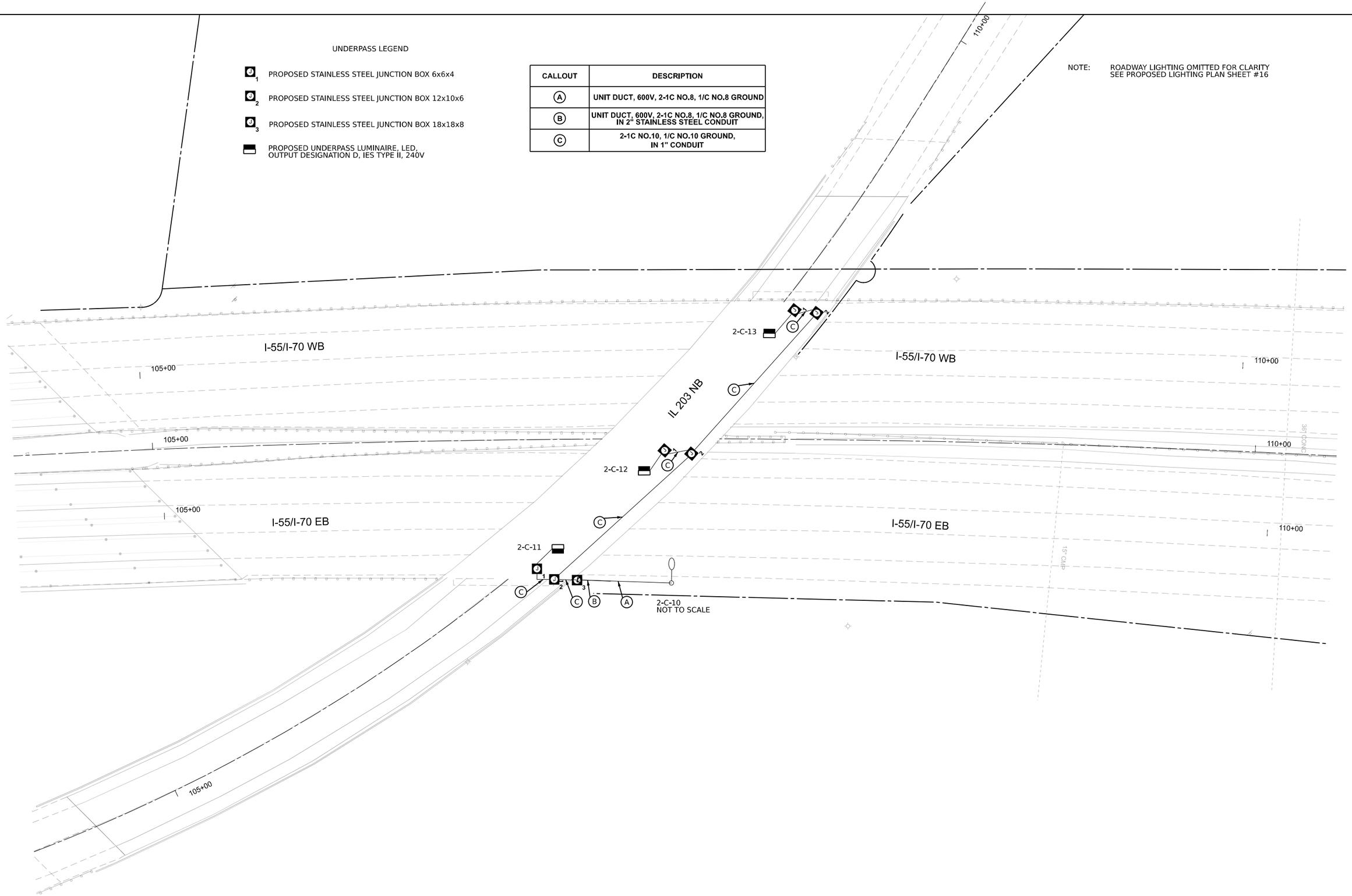

MODEL: $MODELNAMES
FILE NAME: D876E84-I5570-sht-RdyLgtPh-26_20_Scale.dgn

Jacobs
525 West Monroe
Suite 1600
Chicago, IL 60661
(312) 251-3000

USER NAME = jacobspw18lcs03$	DESIGNED -	REVISED -	
	DRAWN -	REVISED -	
PLOT SCALE = 0.16666667 ' / in.	CHECKED -	REVISED -	
PLOT DATE = 10/2/2025	DATE - 2025/10/03	REVISED -	

STATE OF ILLINOIS
DEPARTMENT OF TRANSPORTATION

PROPOSED UNDERPASS LIGHTING PLANS
I-55 / I-70 AT IL 203

SCALE: 1" = 20' | SHEET 26 OF 31 SHEETS | STA. | TO STA.

F.A.I. RTE.	SECTION	COUNTY	TOTAL SHEETS	SHEET NO.
70	Section82-(5,6)RS-2, 60-6RS-2	MADISON & ST. CLAIR	678	366

CONTRACT NO. 76E84

ILLINOIS | FED. AID PROJECT

UNDERPASS LEGEND

- PROPOSED STAINLESS STEEL JUNCTION BOX 6x6x4
- PROPOSED STAINLESS STEEL JUNCTION BOX 12x10x6
- PROPOSED STAINLESS STEEL JUNCTION BOX 18x18x8
- PROPOSED UNDERPASS LUMINAIRE, LED, OUTPUT DESIGNATION D, IES TYPE II, 240V

CALLOUT	DESCRIPTION
A	UNIT DUCT, 600V, 2-1C NO.8, 1/C NO.8 GROUND
B	UNIT DUCT, 600V, 2-1C NO.8, 1/C NO.8 GROUND, IN 2" STAINLESS STEEL CONDUIT
C	2-1C NO.10, 1/C NO.10 GROUND, IN 1" CONDUIT

NOTE: ROADWAY LIGHTING OMITTED FOR CLARITY
SEE PROPOSED LIGHTING PLAN SHEET #19

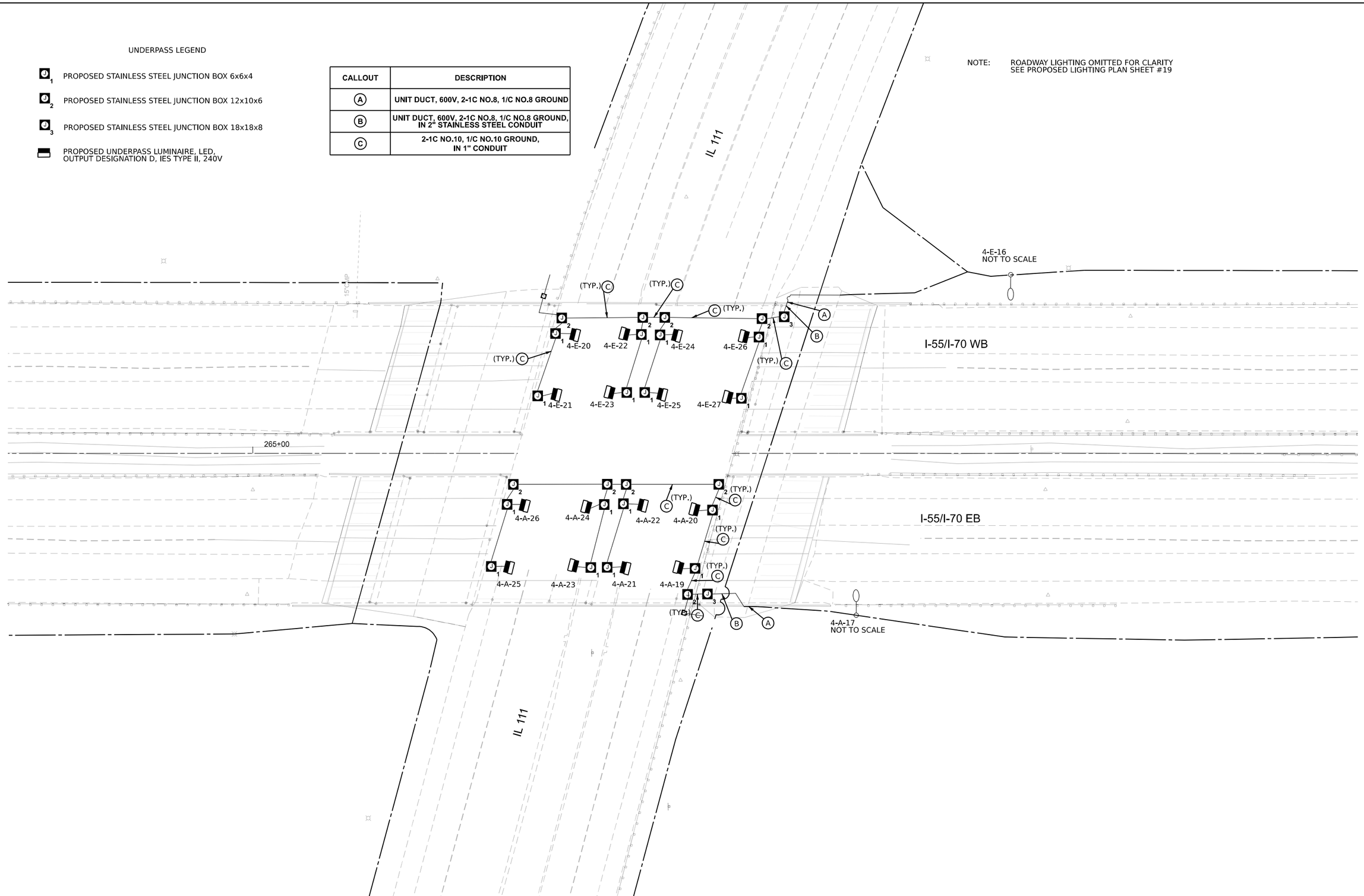

MODEL: $MODELNAMES
FILE NAME: D876E84-I5570-sht-RdyLgtPln-27_20_Scale.dgn

Jacobs
525 West Monroe
Suite 1600
Chicago, IL 60661
(312) 251-3000

USER NAME = jacobspw18lcs04$	DESIGNED -	REVISED -	
	DRAWN -	REVISED -	
PLOT SCALE = 0.16666667 ' / in.	CHECKED -	REVISED -	
PLOT DATE = 10/2/2025	DATE - 2025/10/03	REVISED -	

STATE OF ILLINOIS
DEPARTMENT OF TRANSPORTATION

PROPOSED UNDERPASS LIGHTING PLANS
I–55 / I–70 AT IL 203

SCALE: 1" = 20' | SHEET 27 OF 31 SHEETS | STA. TO STA.

F.A.I. RTE.	SECTION	COUNTY	TOTAL SHEETS	SHEET NO.
70	Section82-(5,6)RS-2, 60-6RS-2	MADISON & ST. CLAIR	678	367
		CONTRACT NO. 76E84		
		ILLINOIS	FED. AID PROJECT	

UNDERPASS LEGEND

- PROPOSED STAINLESS STEEL JUNCTION BOX 6x6x4
- PROPOSED STAINLESS STEEL JUNCTION BOX 12x10x6
- PROPOSED STAINLESS STEEL JUNCTION BOX 18x18x8
- PROPOSED UNDERPASS LUMINAIRE, LED, OUTPUT DESIGNATION D, IES TYPE II, 240V

CALLOUT	DESCRIPTION
A	UNIT DUCT, 600V, 2-1C NO.8, 1/C NO.8 GROUND
B	UNIT DUCT, 600V, 2-1C NO.8, 1/C NO.8 GROUND, IN 2" STAINLESS STEEL CONDUIT
C	2-1C NO.10, 1/C NO.10 GROUND, IN 1" CONDUIT

NOTE: ROADWAY LIGHTING OMITTED FOR CLARITY
SEE PROPOSED LIGHTING SHEET 21

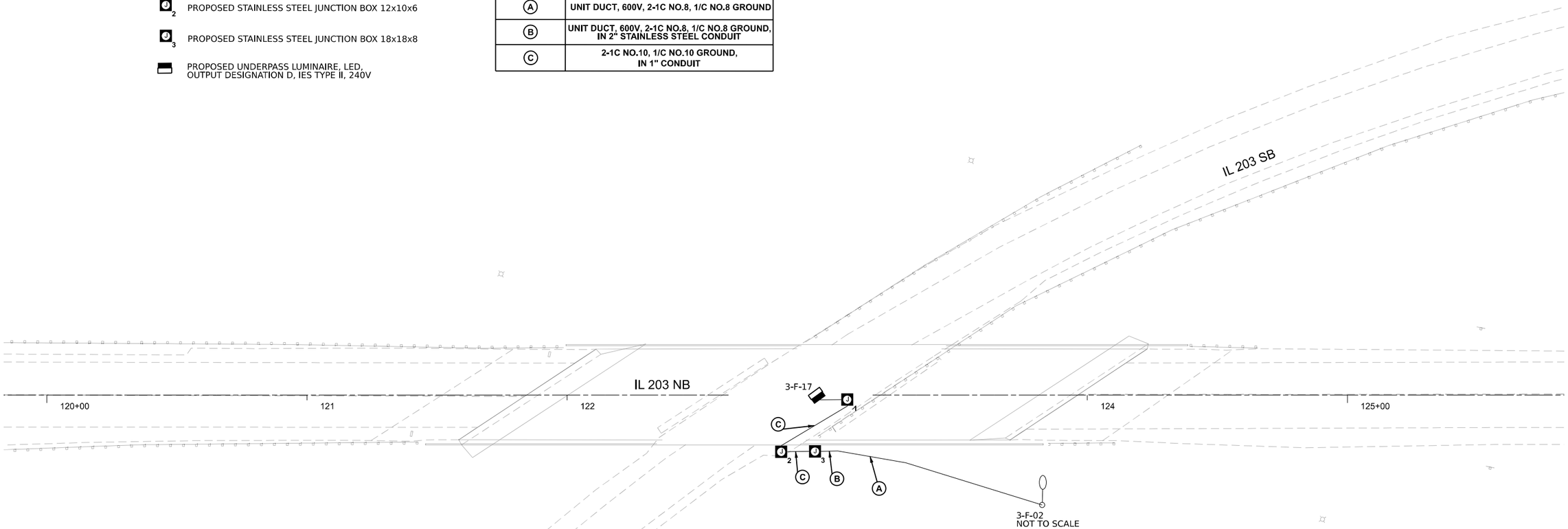

MODEL: $MODELNAME$
FILE NAME: D876E84-I557D-sht-Rdy_LgtPh-28_20_Scale.dgn

Jacobs
525 West Monroe
Suite 1600
Chicago, IL 60661
(312) 251-3000

USER NAME = jacobspw18lcs01$	DESIGNED -	REVISED -
	DRAWN -	REVISED -
PLOT SCALE = 0.16666667 ' / in.	CHECKED -	REVISED -
PLOT DATE = 10/2/2025	DATE - 2025/10/03	REVISED -

STATE OF ILLINOIS
DEPARTMENT OF TRANSPORTATION

PROPOSED UNDERPASS LIGHTING PLANS
I-55 / I-70 AT IL 203

SCALE: 1" = 20' | SHEET 28 OF 31 SHEETS | STA. TO STA.

F.A.I. RTE.	SECTION	COUNTY	TOTAL SHEETS	SHEET NO.
70	Section82-(5,6)RS-2, 60-6RS-2	MADISON & ST. CLAIR	678	368

CONTRACT NO. 76E84

ILLINOIS | FED. AID PROJECT

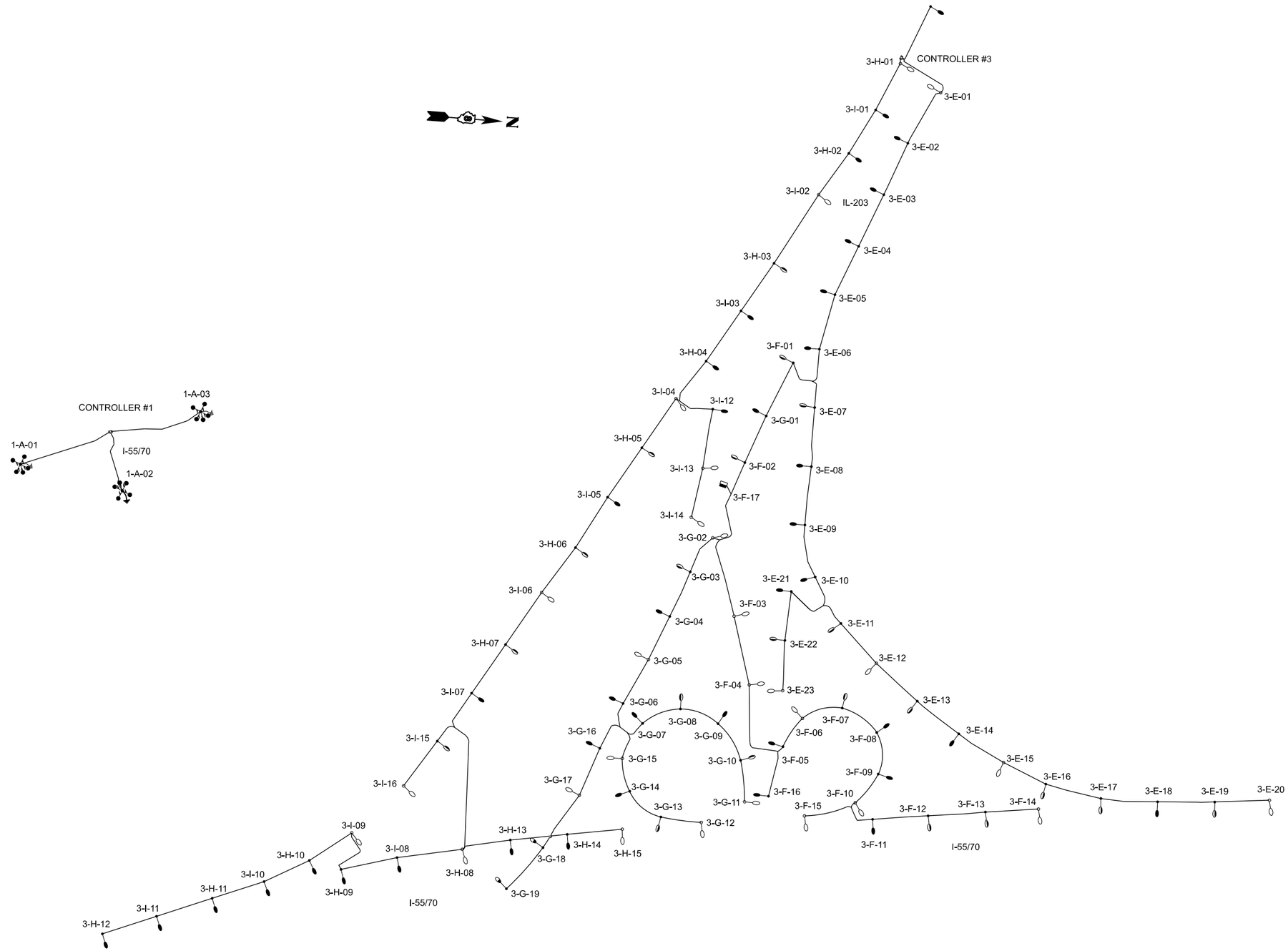

MODEL: $MODELNAMES
FILE NAME: D876E84-I5570-sIH-LigWrDg-01.dgn

Jacobs
525 West Monroe
Suite 1600
Chicago, IL 60661
(312) 251-3000

USER NAME = jacobspw18ics01$	DESIGNED -	REVISED -	
	DRAWN -	REVISED -	
PLOT SCALE = 0.16666667 ' / in.	CHECKED -	REVISED -	
PLOT DATE = 10/2/2025	DATE - 2025/10/03	REVISED -	

STATE OF ILLINOIS
DEPARTMENT OF TRANSPORTATION

SINGLE LINE DIAGRAM
CONTROLLER 1 & 3

SCALE: NTS | SHEET 29 OF 31 SHEETS | STA. | TO STA.

F.A.I. RTE.	SECTION	COUNTY	TOTAL SHEETS	SHEET NO.
70	Section82-(5,6)RS-2, 60-6RS-2	MADISON & ST. CLAIR	678	369
		CONTRACT NO. 76E84		
		ILLINOIS	FED. AID PROJECT	

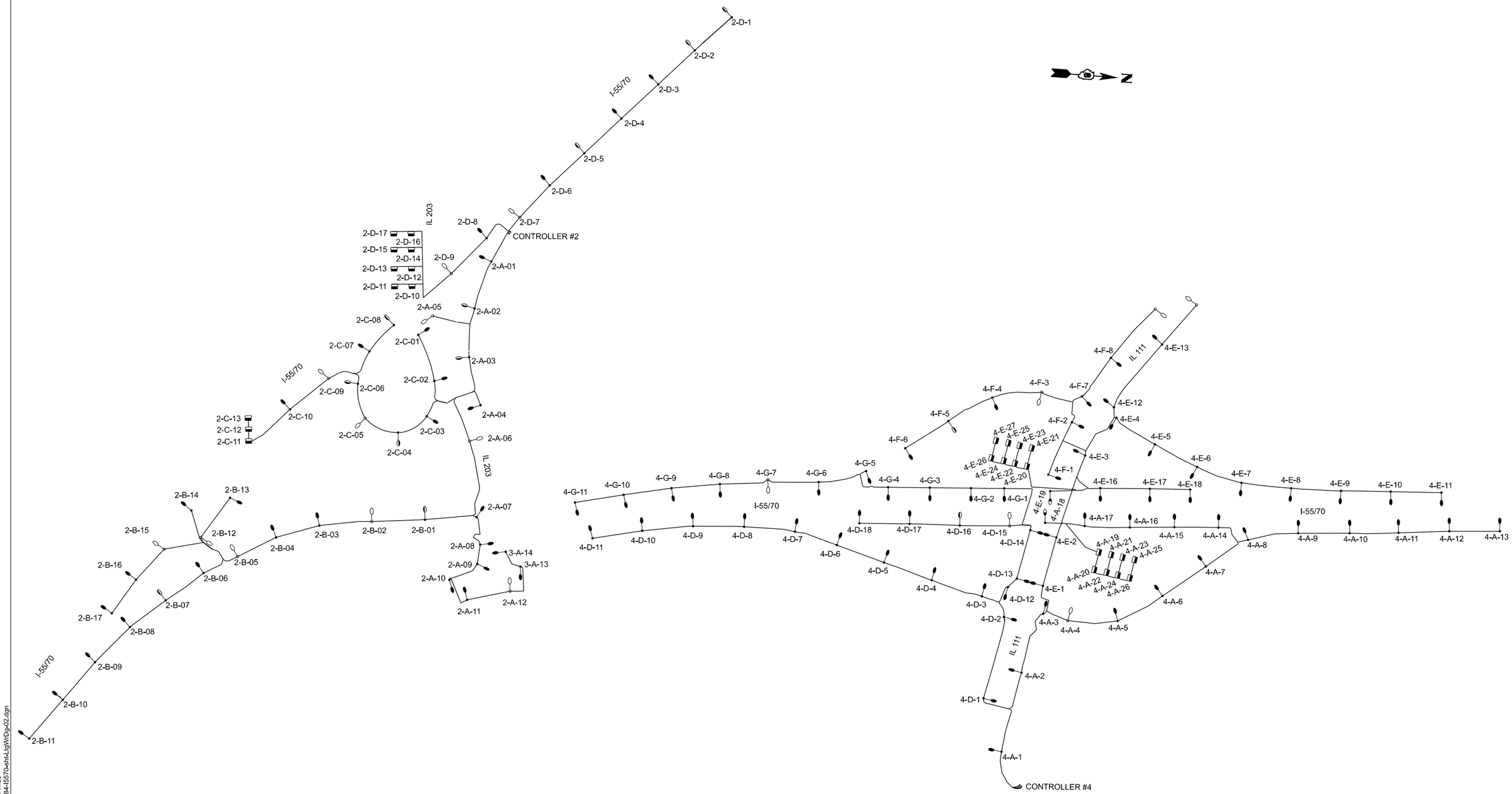

MODEL: $MODELNAMES
FILE NAME: D876E84-I5570-sln-LigWrDg-02.dgn

Jacobs
525 West Monroe
Suite 1600
Chicago, IL 60661
(312) 251-3000

USER NAME = jacobspw18ics04$	DESIGNED -	REVISED -	
	DRAWN -	REVISED -	
PLOT SCALE = 0.16666667 ' / in.	CHECKED -	REVISED -	
PLOT DATE = 10/2/2025	DATE - 2025/10/03	REVISED -	

STATE OF ILLINOIS
DEPARTMENT OF TRANSPORTATION

SINGLE LINE DIAGRAM
CONTROLLER 2 & 4

SCALE: NTS | SHEET 30 OF 31 SHEETS | STA. | TO STA.

F.A.I. RTE.	SECTION	COUNTY	TOTAL SHEETS	SHEET NO.
70	Section82-(5,6)RS-2, 60-6RS-2	MADISON & ST. CLAIR	678	370

CONTRACT NO. 76E84

ILLINOIS | FED. AID PROJECT

Illinois Department of Transportation

Luminaire Performance Table

Project

Date	Contract Number	Section Number	County
06/20/25	76E84	82-(5,6)RS-2, 60-6RS-2	Madison

Marked Route Number	Municipality
I55/70	IDOT

Roadway

Lane Width	# of Lanes	Median Width	I.E.S. Surface Classification	Q-Zero Value
12	3	N/A	R3	0.07

Structure

Mounting Height	Arm Length	Set-Back	Number of Luminaires (Highmast & Sign Lighting Only)
50	15	18	

Luminaire

Description	I.E.S. Lateral Distribution	I.E.S. Vertical Distribution
OUTPUT DESIGNATION H	TYPE III	MEDIUM

Total Light Loss Factor (LLF)	B-U-G Rating	Shields	Dimming Protocol
0.7	B4-U0-G4	N/A	0-10V

Layout

Spacing (to Nearest 5 ft)	Configuration (Opposite, Staggered, 1 Sided, or Median)
210	1 SIDED

Performance

Average Illuminance, E_{AVE} (fc)	Uniformity Ratio, E_{AVE}/E_{MIN}
N/A	N/A

Average Luminance, L_{AVE} (cd/m²)	Uniformity Ratio, L_{AVE}/L_{MIN}	Uniformity Ratio, L_{MAX}/L_{MIN}	Veiling Luminance Ratio, L_V/L_{AVE}
0.9	1.7	2.6	Less than or equal to 0.3:1

Light Tresspass

Distance to ROW (behind pole)	Max. Horizontal Illuminance at ROW, E_H	Max. Vertical Illuminance at ROW, E_V
N/A	N/A	N/A

Notes

1. Set-Back is from Edge of Pavement (white line) except for sign luminaires when it is vertical and horizontal distance from the sign to the luminaire.
2. Lighting calculations shall be performed with all luminaires oriented toward and perpendicular to the roadway.
3. Total Light Loss Factor (LLF) = the product of "Lumen Maintenance" (LLD) = 0.9, "Dirt Depreciation" (LDD) = 0.8, and "Equipment Factors" (EF) = 0.95.
4. Performance requirements shall be the minimum acceptable standards of photometric performance for the luminaire, based on the given conditions listed above.

Printed 06/24/25

BDE 5630 (04/10/19)

Benchmark: Aluminum Disk in concrete swale (top of paved ditch) in median of Ramp from I-55/70 NB to IL 203 SB. ELEV. = 424.55'

Existing Structures: Structure Numbers 082-0018 (WB) and 082-0019 (EB) were originally built in 1960 as F.A.I. Route 70 under Section 82-5B and 82-5F. The existing structures consist of three continuous non-composite steel beam superstructures supported on concrete pile bent piers and stub abutments. Along the local tangents, the WB bridge measures 124'-7" back to back abutments with a 41°06' 42" right forward skew, and the EB bridge measures 128'- 4¼" back to back abutments with a 43°00' 35" right forward skew. Both bridges are straight with an out to out width of 56'-0" and maintain a curved roadway alignment. The bridges were last painted in 2007. The existing bridge paint does not contain lead.

Traffic Control: Traffic is to be maintained using stage construction.

No Salvage.

DESIGN STRESSES

FIELD UNITS (New Const.)

f'c = 4,000 psi (Superstructure)
fy = 60,000 psi (Reinforcement)

FIELD UNITS (Exist. Const.)

f'c = 3,500 psi (Superstructure)
f'c = 3,500 psi (Substructure)
fy = 40,000 psi (Reinforcement)
fy = 33,000 psi (Structural Steel)

SCOPE OF WORK

1. Remove and replace bridge decks and add shear studs to existing beams to make them composite.
2. Remove approach pavements including removal of buried pile bent caps and replace with bridge approach slabs.
3. Remove abutment backwalls and convert to semi-integral abutments, while providing new drainage system behind abutments.
4. Remove and reconfigure wingwalls for construction of new approach slabs. Rebuild concrete slope walls around newly configured wingwalls.
5. Formed concrete repair on EB and WB Pier Cap.
6. Remove end diaphragms and supporting clip angles.
7. Remove and replace existing approach guardrail terminals.
8. Remove and replace guardrail end terminals.
9. Remove existing floor drains and connections to beams. Install new floor drains and drainage scuppers.
10. Clean and paint fascia beams and beam ends and abutment bearings.
11. Remove attached abandoned utilities.

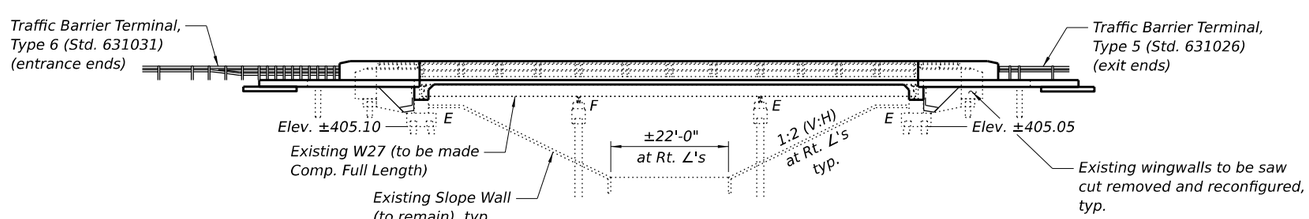

ELEVATION

BYPASS FLOWRATE FROM BRIDGE LIMITS (END OF APPROACH SLAB) TO ROADWAY

	NW Curbline	SW Curbline	NE Curbline	SE Curbline
Q (C.F.S.) SN 082-0018	0	0	0.24	0.24
Q (C.F.S.) SN 082-0019	0	0	0.99	0.04

LOADING HL-93

Allow 25#/sq. ft. for future wearing surface.

SEISMIC DATA

Seismic Retrofit Category (SRC) = B
Design Spectral Acceleration at 1.0 sec. (SD1) = 0.241g
Design Spectral Acceleration at 0.2 sec. (SDS) = 0.494g
Soil Site Class = D
Performance Level (PL) = PL 1

DESIGN SPECIFICATIONS

(New Construction)
2024 AASHTO LRFD Bridge Design Specifications, 10th Edition

(Existing Construction)
2002 AASHTO Standard Specifications for Highway Bridges, 17th Edition

2006 Seismic Retrofitting Manual for Highway Structures: Part 1 - Bridges (FHWA-HRT-06-032)

LICENSED STRUCTURAL ENGINEER
CHADWICK J. FUESTING
081-005834
STATE OF ILLINOIS
Chad Fuesting
EXPIRES: 11/30/2026
DATE: 12/04/2025

APPROVED
For Structural Adequacy Only
Engineer of Bridges & Structures

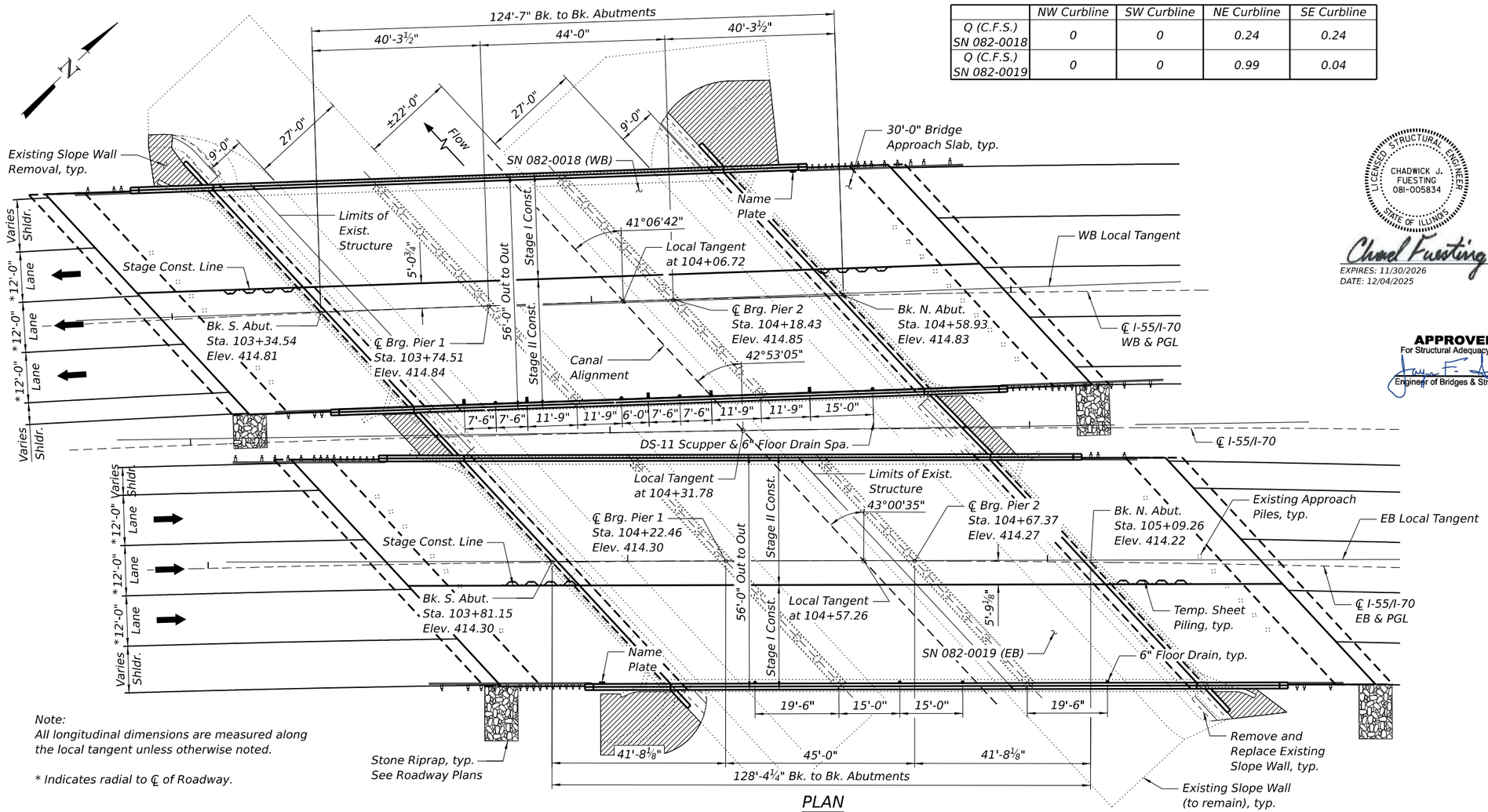

Note:
All longitudinal dimensions are measured along the local tangent unless otherwise noted.

* Indicates radial to ℄ of Roadway.

PLAN

Range 9W, 3rd P.M.

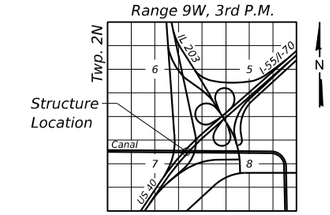

LOCATION SKETCH

GENERAL PLAN AND ELEVATION
I-55 / I-70 & US 40
OVER DRAINAGE TO CAHOKIA CANAL
F.A.I. 70 - SEC. 82-(5,6)RS-2
MADISON & ST. CLAIR COUNTY
STATION 104+31.78
STRUCTURE NO. 082-0018 (WB)
STRUCTURE NO. 082-0019 (EB)

MODEL: $MODELNAMES
FILE NAME: D876E84-001-0018-0019-GPE.dgn

Jacobs
525 West Monroe
Suite 1600
Chicago, IL 60661
(312) 251-3000

USER NAME = jacobspw18lcs09$	DESIGNED - CJF	REVISED -	
	DRAWN - EAK	REVISED -	
PLOT SCALE = 0.16666667 ' / in.	CHECKED - ED	REVISED -	
PLOT DATE = 12/4/2025	DATE - 2025/10/03	REVISED -	

STATE OF ILLINOIS
DEPARTMENT OF TRANSPORTATION

GENERAL PLAN & ELEVATION
STRUCTURE NO. 082–0018 (WB) & 082–0019 (EB)

SCALE: NTS | SHEET 1 OF 39 SHEETS | STA. | TO STA.

F.A.I. RTE.	SECTION	COUNTY	TOTAL SHEETS	SHEET NO.
70	Section82-(5,6)RS-2, 60-6RS-2	MADISON & ST. CLAIR	678	372
		CONTRACT NO. 76E84		
		ILLINOIS	FED. AID PROJECT	

GENERAL NOTES

No field welding is permitted except as specified in the contract documents.

Reinforcement bars designated (E) shall be epoxy coated.

The finishing machine rails shall be placed on the top of the top flange of the exterior beams within the deck pour. Beam blocks shall be placed between beams at all tie locations in each bay for the full width of the deck pour.

Prior to pouring the new concrete deck, all heavy or loose rust, loose mill scale, and other loose detrimental foreign material shall be removed from the surfaces in contact with concrete (SSPC – SP3 standards). Tightly adhered paint may remain unless otherwise noted. Removal shall be accomplished by methods that will not damage the steel and the cost will be paid for according to Article 109.04 of the Standard Specifications.

As directed by the Engineer, existing construction accessories welded to the top flange of beams and girders shall be removed. The weld areas shall be ground flush and inspected for cracks using magnetic particle testing (MT) or dye penetrant testing (PT) by qualified personnel approved by the Engineer. Any cracks that cannot be removed by grinding ¼ in. deep shall be identified and reported to the Bureau of Bridges & Structures for further disposition. The cost of removing welded accessories, grinding and inspecting weld areas and grinding cracks will be paid for according to Article 109.04 of the Standard Specifications.

Plan dimensions and details relative to the existing structure have been taken from existing plans are subject to nominal construction variations. The Contactor shall field verify existing dimensions and details affecting new construction and make necessary approved adjustments prior to construction or ordering of materials. Such variations shall not be cause for additional compensation for a change in scope of the work, however, the Contractor will be paid for the quantity actually furnished at the unit price bid for the work.

Layout of the slope protection system may be varied to suit ground conditions in the field as directed by the Engineer.

Cleaning and painting of the existing structural steel shall be as specified in the special provision for "Cleaning and Painting Existing Steel Structures". All beams, bearings and other structural steel within 7 ft of the beam ends and the fascia beams shall be cleaned per Near White Blast Cleaning - SSPC-SP10.

The designated areas cleaned per near White Blast Cleaning shall be painted according to the requirements of the Organic Zinc-Rich Primer/Epoxy Intermediate Coat/Urethane Topcoat (OZ/E/U). The color of the final finish coat for all interior steel surfaces shall be Gray, Munsell No 5B 7/1. The color of the final finish coat for the exterior and bottom flange of the fascia beams shall be Gray (Munsell No. 5B 7/1).

Containment of cleaning residue is required to control nuisance dust. See special provisions.

SSPC QP1 Contractor Certification is required for this Contract.

INDEX OF SHEETS

TOTAL BILL OF MATERIAL

ITEM	UNIT	SUPER 082-0018 (WB)	SUPER 082-0019 (EB)	SUB 082-0018 (WB)	SUB 082-0019 (EB)	TOTAL
Concrete Removal	Cu. Yd.	-	-	44.8	49.5	94.3
Slope Wall Removal	Sq. Yd.	-	-	193	129	322
Removal of Existing Concrete Deck No. 1	Each	1	-	-	-	1
Removal of Existing Concrete Deck No. 2	Each	-	1	-	-	1
Structure Excavation	Cu. Yd.	-	-	348	321	669
Floor Drains	Each	4	4	-	-	8
Concrete Structures	Cu. Yd.	-	-	60.2	61.0	121.2
Concrete Superstructure	Cu. Yd.	281.0	289.2	-	-	570.2
Bridge Deck Grooving	Sq. Yd.	1,049	1,071	-	-	2,120
Protective Coat	Sq. Yd.	1,242	1,268	-	-	2,510
Concrete Superstructure (Approach Slab)	Cu. Yd.	153.4	153.4	-	-	306.8
Stud Shear Connectors	Each	6,264	6,480	-	-	12,744
Reinforcement Bars, Epoxy Coated	Pound	124,710	127,000	3,720	3,350	258,780
Bar Splicers	Each	627	644	-	-	1271
Slope Wall 6 Inch	Sq. Yd.	-	-	119	96	215
Name Plates	Each	1	1	-	-	2
Temporary Sheet Piling	Sq. Ft.	-	-	517	505	1022
Granular Backfill for Structures	Cu. Yd.	-	-	240	233	473
Geocomposite Wall Drain	Sq. Yd.	-	-	127	124	251
Pipe Underdrains for Structures 4"	Foot	-	-	185	189	374
Concrete Removal (Special)	Cu. Yd.	-	-	7.6	7.6	15.2
Structural Steel Removal	Pound	5,760	5,920	-	-	11,680
Containment and Disposal of Non-Lead Paint Cleaning Residues No. 1	L. Sum	1	-	-	-	1
Containment and Disposal of Non-Lead Paint Cleaning Residues No. 2	L. Sum	-	1	-	-	1
Bar Terminators	Each	114	114	-	-	228
Drainage Scuppers, DS-11	Each	5	-	-	-	5
Cleaning and Painting Steel Bridge No. 1	L. Sum	1	-	-	-	1
Cleaning and Painting Steel Bridge No. 2	L. Sum	-	1	-	-	1
Structural Repair of Concrete (Depth Equal to or Less Than 5 inches)	Sq. Ft.	-	-	3	8	11
Approach Slab Removal	Sq. Yd.	-	-	374	374	748

STA. 104+31.78
RE-BUILT 202_ BY
STATE OF ILLINOIS
F.A.I. RT. 70 SEC.
82-(5,6)RS-2
LOADING HL-93
STR. NO. 082-0018

STA. 104+31.78
RE-BUILT 202_ BY
STATE OF ILLINOIS
F.A.I. RT. 70 SEC.
82-(5,6)RS-2
LOADING HL-93
STR. NO. 082-0019

NAME PLATE

See Std. 515001

Existing Name Plates shall be cleaned and relocated next to new Name Plate. Cost included with Name Plates.

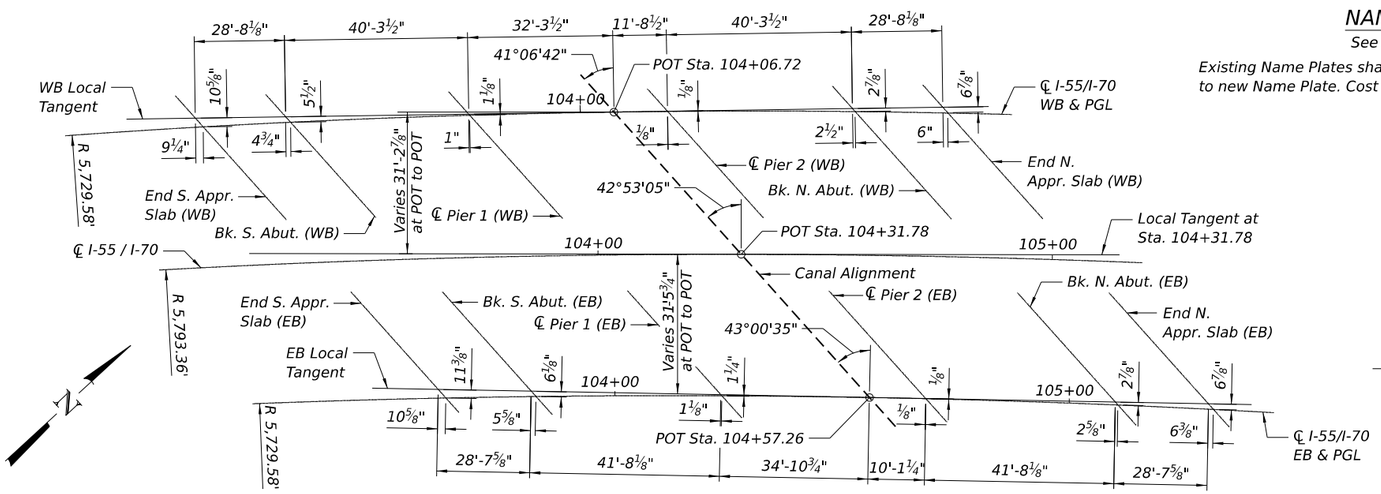

OFFSET SKETCH

CURVE DATA

℄ I-55/I-70 WB	℄ I-55/I-70	℄ I-55/I-70 EB
P.I. Sta. = 103+80.88	P.I. Sta. = 103+12.57	P.I. Sta. = 102+40.86
Δ = 14°20'45" (RT)	Δ = 14°20'45" (RT)	Δ = 14°20'45" (RT)
D = 01°00'00"	D = 00°59'20"	D = 01°00'00"
R = 5,729.58'	R = 5,793.36'	R = 5,729.58'
T = 721.06'	T = 729.09'	T = 721.06'
L = 1434.58'	L = 1450.55'	L = 1434.58'
E = 45.19'	E = 45.70'	E = 45.19'
SE = 1.56%	SE = 1.56%	SE = 1.56%
P.C. Sta. = 96+59.82	P.C. Sta. = 95+83.48	P.C. Sta. = 95+19.80
P.T. Sta. = 110+94.40	P.T. Sta. = 110+34.04	P.T. Sta. = 109+54.38

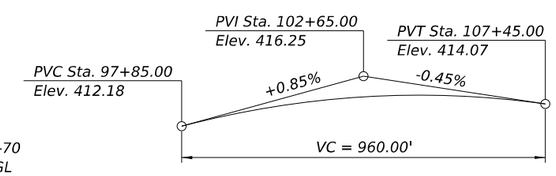

PROFILE GRADE

(Along ℄ I-55/I-70 WB)

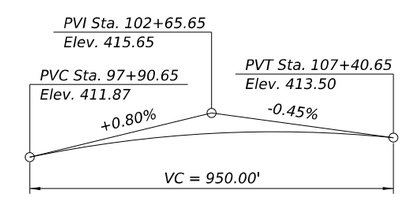

PROFILE GRADE

(Along ℄ I-55/I-70 EB)

MODEL: $MODELNAME$
FILE NAME: D876E84-0022-0018-0019-GENERAL.dgn

Jacobs
525 West Monroe
Suite 1600
Chicago, IL 60661
(312) 251-3000

USER NAME = jacobspw18lcs10$	DESIGNED - CJF	REVISED -	
	DRAWN - EAK	REVISED -	
PLOT SCALE = 0.16666667 ' / in.	CHECKED - ED	REVISED -	
PLOT DATE = 12/4/2025	DATE - 2025/10/03	REVISED -	

STATE OF ILLINOIS
DEPARTMENT OF TRANSPORTATION

GENERAL DATA
STRUCTURE NO. 082–0018 (WB) & 082–0019 (EB)

SCALE: NTS | SHEET 2 OF 39 SHEETS | STA. | TO STA.

F.A.I. RTE.	SECTION	COUNTY	TOTAL SHEETS	SHEET NO.
70	Section82-(5,6)RS-2, 60-6RS-2	MADISON & ST. CLAIR	678	373
		CONTRACT NO. 76E84		
		ILLINOIS	FED. AID PROJECT	

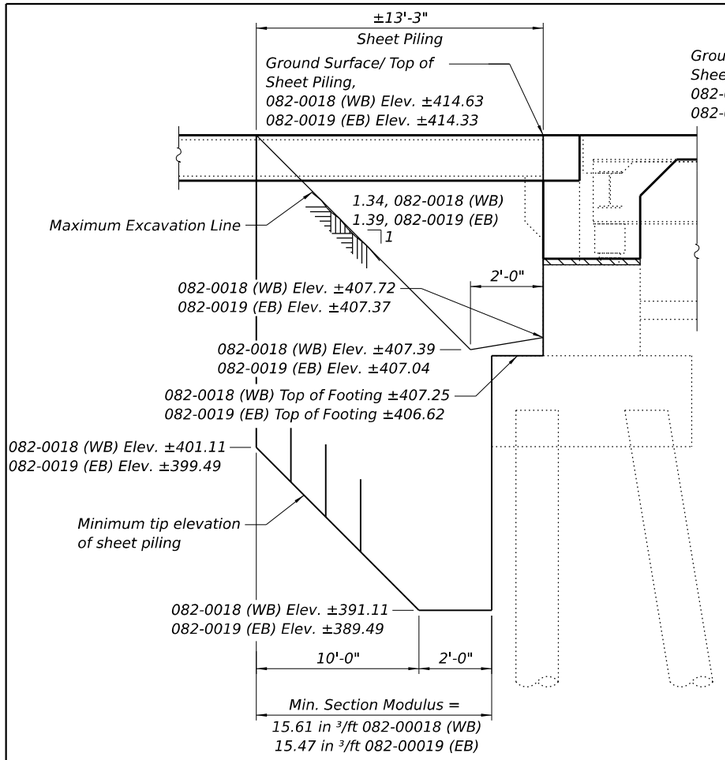

SOUTH ABUTMENT TEMPORARY SHEET PILING

(Looking West)

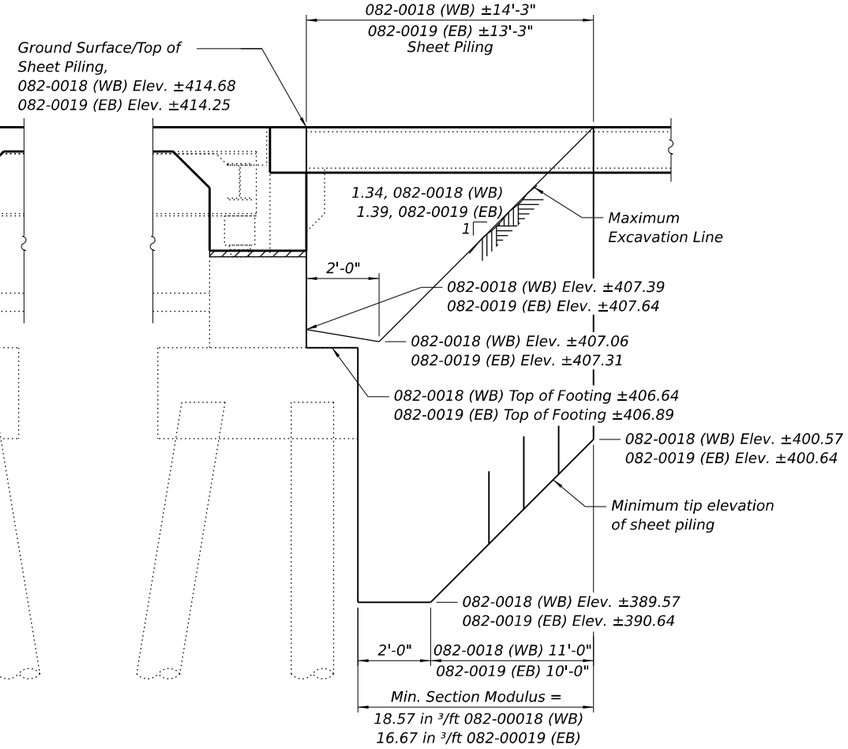

NORTH ABUTMENT TEMPORARY SHEET PILING

(Looking West)

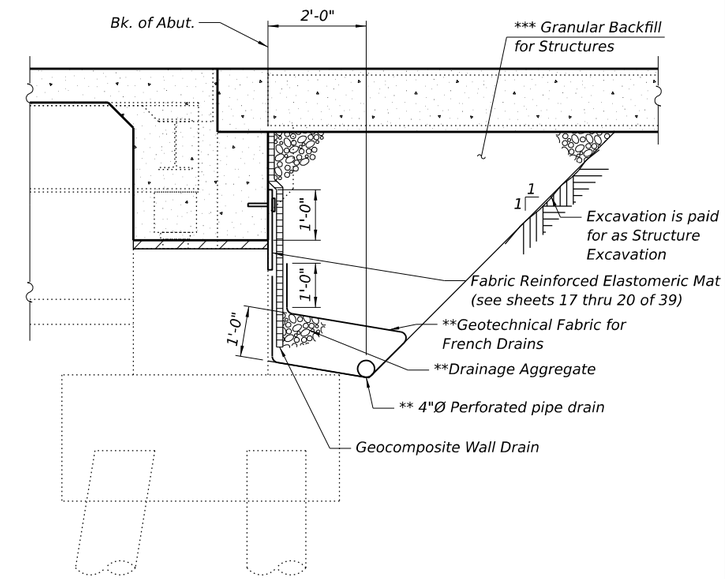

SECTION THRU SEMI-INTEGRAL ABUTMENT

(Horizontal dimensions at right angles)
(North Abutments shown; South Abutments similar)

** Included in the cost of Pipe Underdrains for Structures.
*** Granular Backfill behind abutments shall be compacted according to Article 205.06 of the Standard Specifications. No compaction is allowed 2'-0" behind the Back of Abutment.

Note:
All drainage system components shall extend to 2'-0" from end of each wingwall except an outlet pipe shall extend until intersecting with the side slopes. The pipes shall drain into concrete headwalls. (See Article 601.05 of the Standard Specifications and Highway Standard 601101).

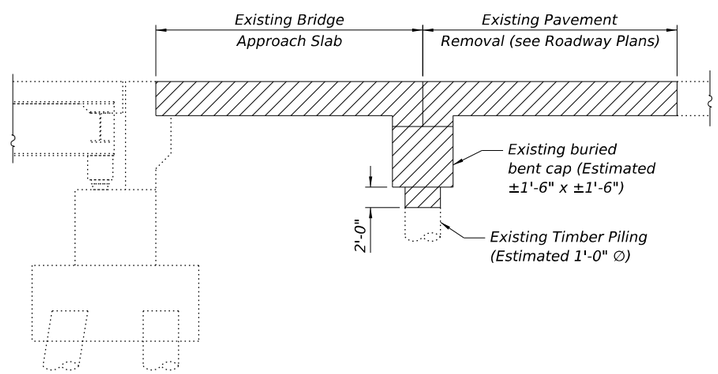

APPROACH SLAB REMOVAL

Removal of the existing approach slab shall be paid for as Approach Slab Removal. The removal of the existing buried bent cap shall include removal of the top 2'-0" of existing piling and shall be paid for as Concrete Removal (Special). (See Sheets 26 thru 29 of 39 for additional removal details.)

Notes:
If the Contractor chooses to alter the temporary cantilevered sheet piling design requirements shown on the plans, a design submittal including plan details and calculations will be required for review and acceptance by the Engineer.

The Contractor shall connect the first sheet to the existing abutment wall to ensure stability of sheets driven to the top of the existing footing. This connection shall be reviewed and accepted by the Engineer and included in the cost for Temporary Sheet Piling.

BILL OF MATERIAL (WB)

ITEM	UNIT	TOTAL
Temporary Sheet Piling	Sq. Ft.	517
Granular Backfill for Structures	Cu. Yd.	240
Geocomposite Wall Drain	Sq. Yd.	127
Pipe Underdrains for Structures 4"	Foot	185
Approach Slab Removal	Sq. Yd.	374

BILL OF MATERIAL (EB)

ITEM	UNIT	TOTAL
Temporary Sheet Piling	Sq. Ft.	505
Granular Backfill for Structures	Cu. Yd.	233
Geocomposite Wall Drain	Sq. Yd.	124
Pipe Underdrains for Structures 4"	Foot	189
Approach Slab Removal	Sq. Yd.	374

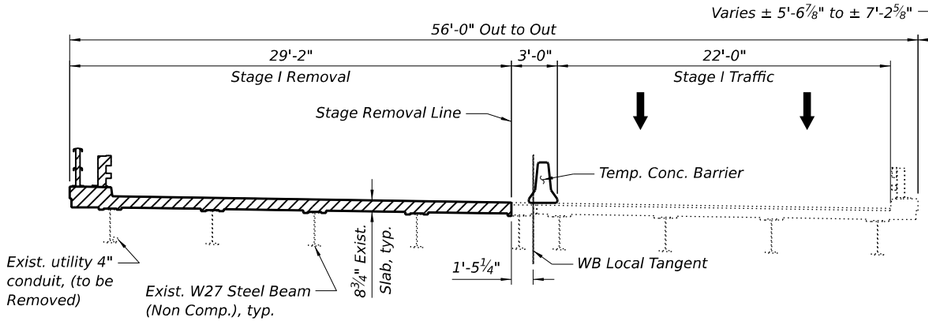

STAGE I TRAFFIC AND REMOVAL WB

(SN 082-0018)

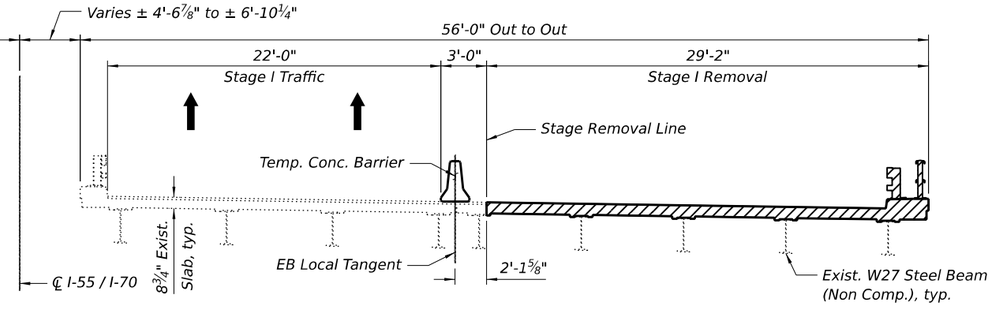

STAGE I TRAFFIC AND REMOVAL EB

(SN 082-0019)

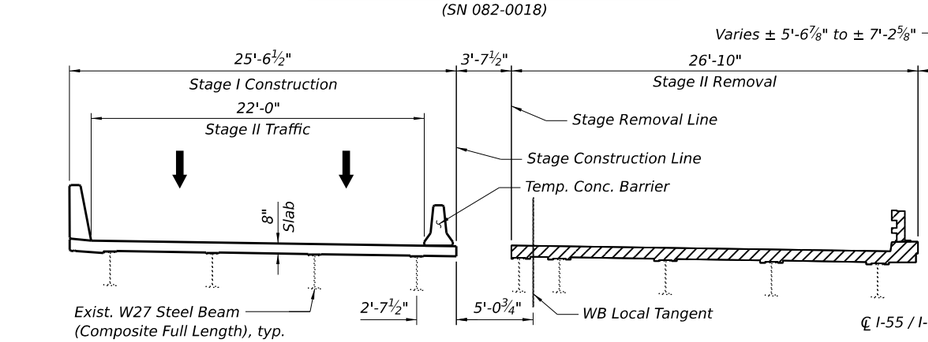

STAGE I CONSTRUCTION
STAGE II TRAFFIC AND REMOVAL WB

(SN 082-0018)

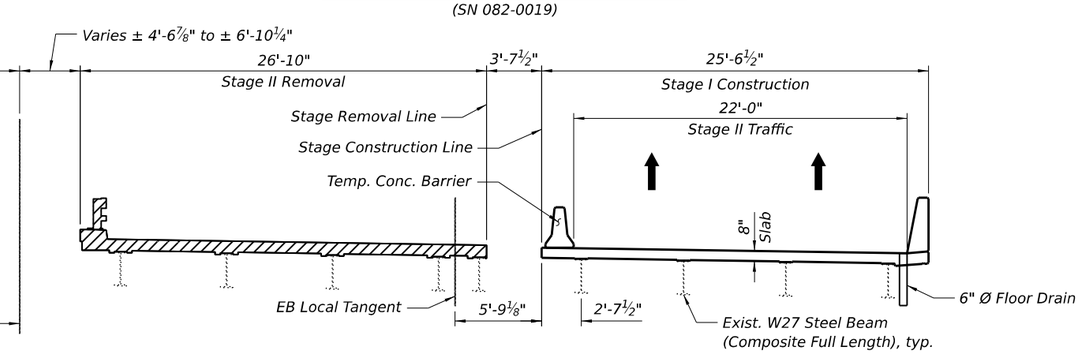

STAGE I CONSTRUCTION
STAGE II TRAFFIC AND REMOVAL EB

(SN 082-0019)

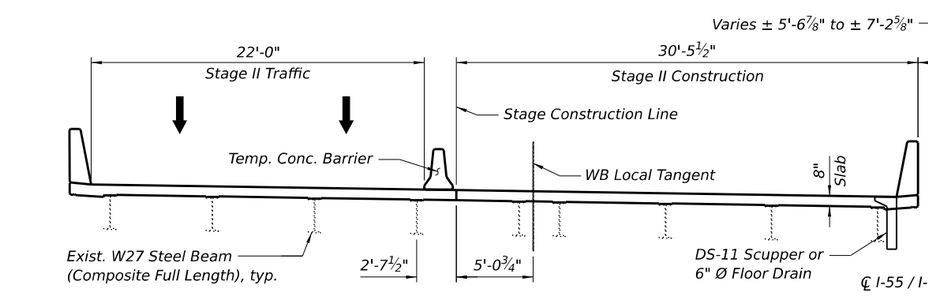

STAGE II CONSTRUCTION AND TRAFFIC WB

(SN 082-0018)

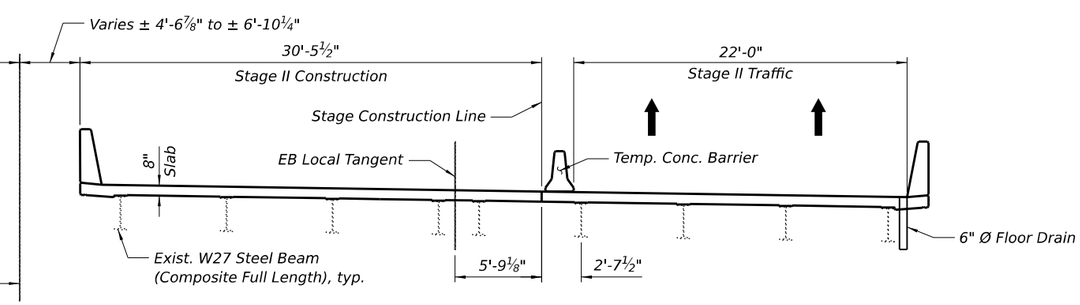

STAGE II CONSTRUCTION AND TRAFFIC EB

(SN 082-0019)

Notes:

Hatch represents limits of Removal.

All sections are looking north.

All transverse dimensions are at right angles to the local tangent, unless noted otherwise.

See Offset Sketch on Sheet 2 of 39 for offsets between tangent lines and ℄ or PGL's.

MODEL: $MODELNAME$
FILE NAME: D876E84-0014-0018-0019-STAGE.dgn

Jacobs
525 West Monroe
Suite 1600
Chicago, IL 60661
(312) 251-3000

USER NAME = jacobspw18lcs10$	DESIGNED - CJF	REVISED -	
	DRAWN - EAK	REVISED -	
PLOT SCALE = 0.16666667 ' / in.	CHECKED - ED	REVISED -	
PLOT DATE = 12/4/2025	DATE - 2025/10/03	REVISED -	

STATE OF ILLINOIS
DEPARTMENT OF TRANSPORTATION

STAGE CONSTRUCTION DETAILS
STRUCTURE NO. 082–0018 (WB) & 082–0019 (EB)

SCALE: NTS | SHEET 4 OF 39 SHEETS | STA. | TO STA.

F.A.I. RTE.	SECTION	COUNTY	TOTAL SHEETS	SHEET NO.
70	Section82-(5,6)RS-2, 60-6RS-2	MADISON & ST. CLAIR	678	375

CONTRACT NO. 76E84

ILLINOIS | FED. AID PROJECT

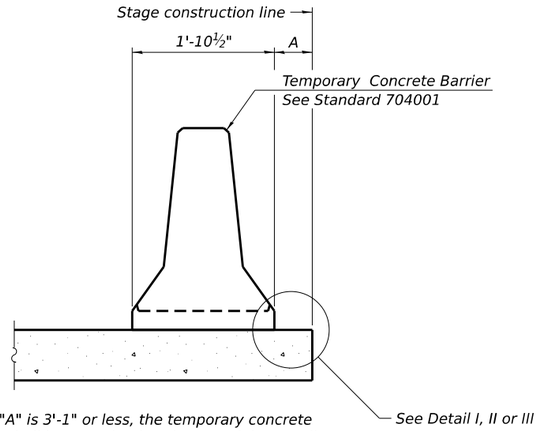

When "A" is 3'-1" or less, the temporary concrete barrier shall be restrained to the new slab according to Detail I, II or III. No restraint is required when "A" is greater than 3'-1".

NEW SLAB OR NEW DECK BEAM

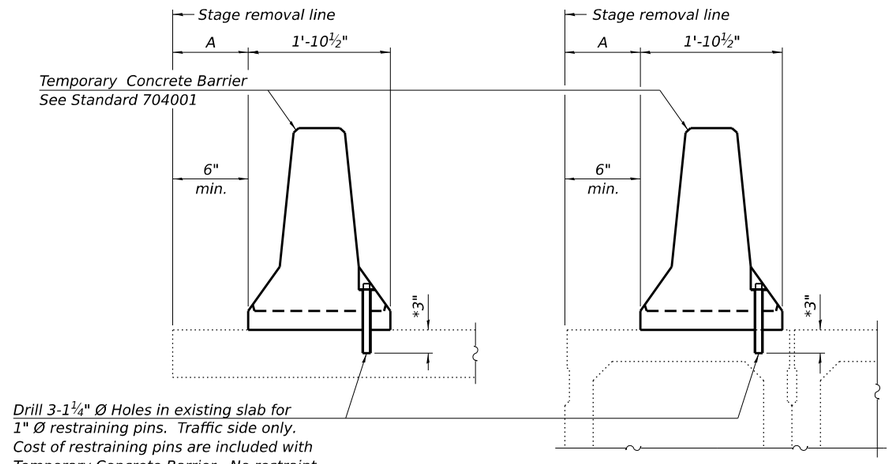

EXISTING SLAB

* When hot-mix asphalt wearing surface is present, embedment shall be 3" plus the wearing surface depth.

EXISTING DECK BEAM

SECTIONS THRU SLAB OR DECK BEAM

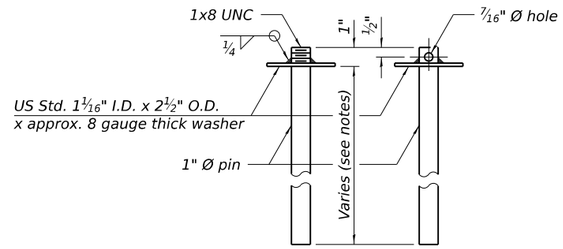

RESTRAINING PIN

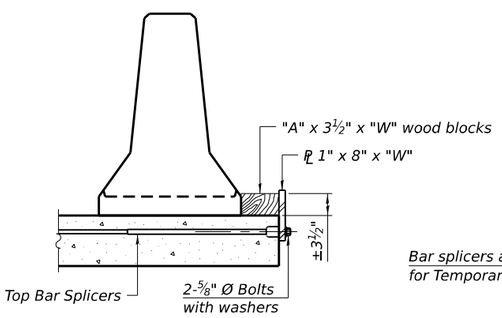

DETAIL I

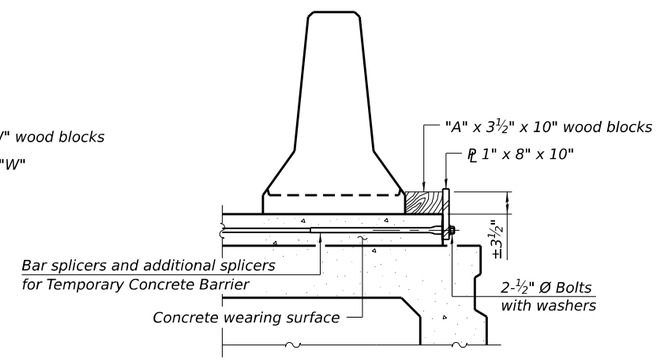

DETAIL II

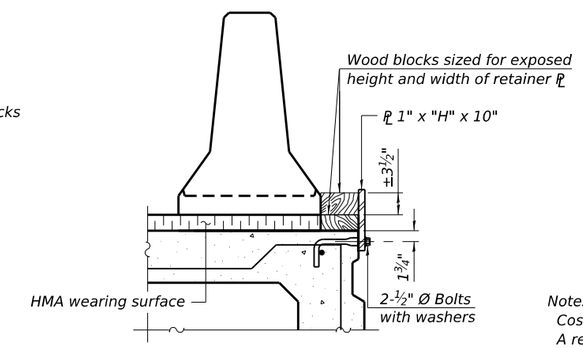

DETAIL III

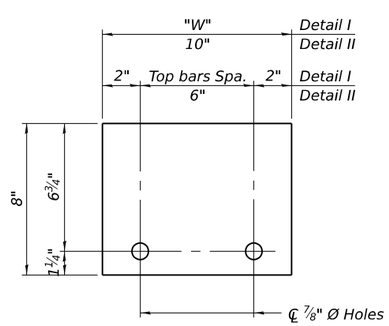

STEEL RETAINER PL 1" x 8" x "W"

(Detail I and II)

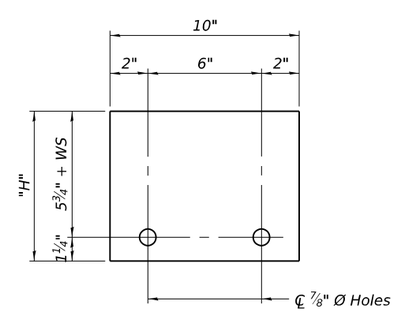

STEEL RETAINER PL 1" x "H" x 10"

(Detail III)

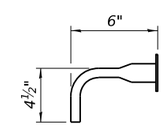

BAR SPLICER FOR #4 BAR - DETAIL III

Notes:

Cost of retainer assembly is included with Temporary Concrete Barrier.

A retainer assembly shall be located at the approximate ℄ of each temporary concrete barrier.

The retainer plate shall not be removed until the concrete on the adjacent stage is ready to be poured. For Detail III applications the retainer plate shall not be removed until just prior to placing the adjacent beam.

When the 'A' dimension is less than 1½", the wood block shall be omitted and the barrier shall be placed in direct contact with the steel retainer plate. For deck beam applications the minimum required 'A' distance is 6" to accommodate the shear key clamping device.

Detail I - Installation for a new bridge deck or bridge slab.

Detail II - Installation for a new deck beam with an initial concrete wearing surface. Additional bar splicers shall be provided at 6'-0" centers and paired with the bar splicers of the concrete wearing surface reinforcement to accommodate the installation of the retainer assemblies. The cost of the additional bar splicers is included with the concrete wearing surface.

Detail III - Installation for a new deck beam with no initial wearing surface or with an initial hot-mix asphalt (HMA) wearing surface present. The deck beam directly beneath the temporary concrete barrier shall be fabricated with bar splicer inserts in the side of the beam, as detailed, to accommodate the installation of the retainer assemblies. A pair of bar splicers, 6" apart, shall be placed at 6'-0" centers along the length of the beam. The cost of the bar splicers is included with the deck beam.

RAILING CRITERIA

NCHRP 350 Test Level	3
Railing Weight (plf)	440

R-27 5-15-2023

MODEL: $MODELNAME$
FILE NAME: D876E84-005-0018-0019-TEMPCONCBARRIER.dgn

Jacobs
525 West Monroe
Suite 1600
Chicago, IL 60661
(312) 251-3000

USER NAME = jacobspw18ics09$	DESIGNED - CJF	REVISED -	
	DRAWN - EAK	REVISED -	
PLOT SCALE = 0.16666667 ' / in.	CHECKED - ED	REVISED -	
PLOT DATE = 12/4/2025	DATE - 2025/10/03	REVISED -	

STATE OF ILLINOIS
DEPARTMENT OF TRANSPORTATION

TEMPORARY CONCRETE BARRIER
STRUCTURE NO. 082-0018 (WB) & 082-0019 (EB)

SCALE: NTS | SHEET 5 OF 39 SHEETS | STA. TO STA.

F.A.I. RTE.	SECTION	COUNTY	TOTAL SHEETS	SHEET NO.
70	Section82-(5,6)RS-2, 60-6RS-2	MADISON & ST. CLAIR	678	376

CONTRACT NO. 76E84

ILLINOIS | FED. AID PROJECT

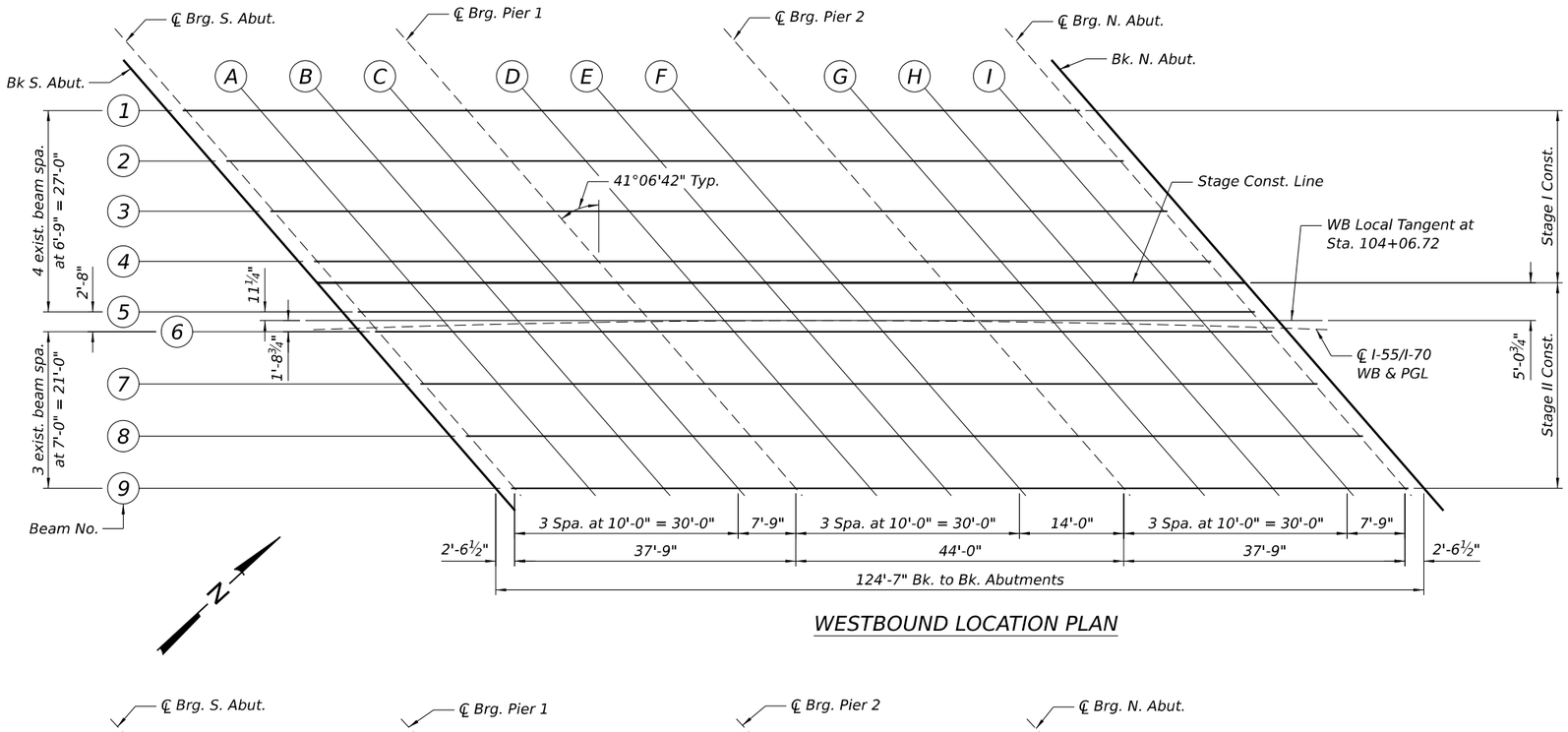

WESTBOUND LOCATION PLAN

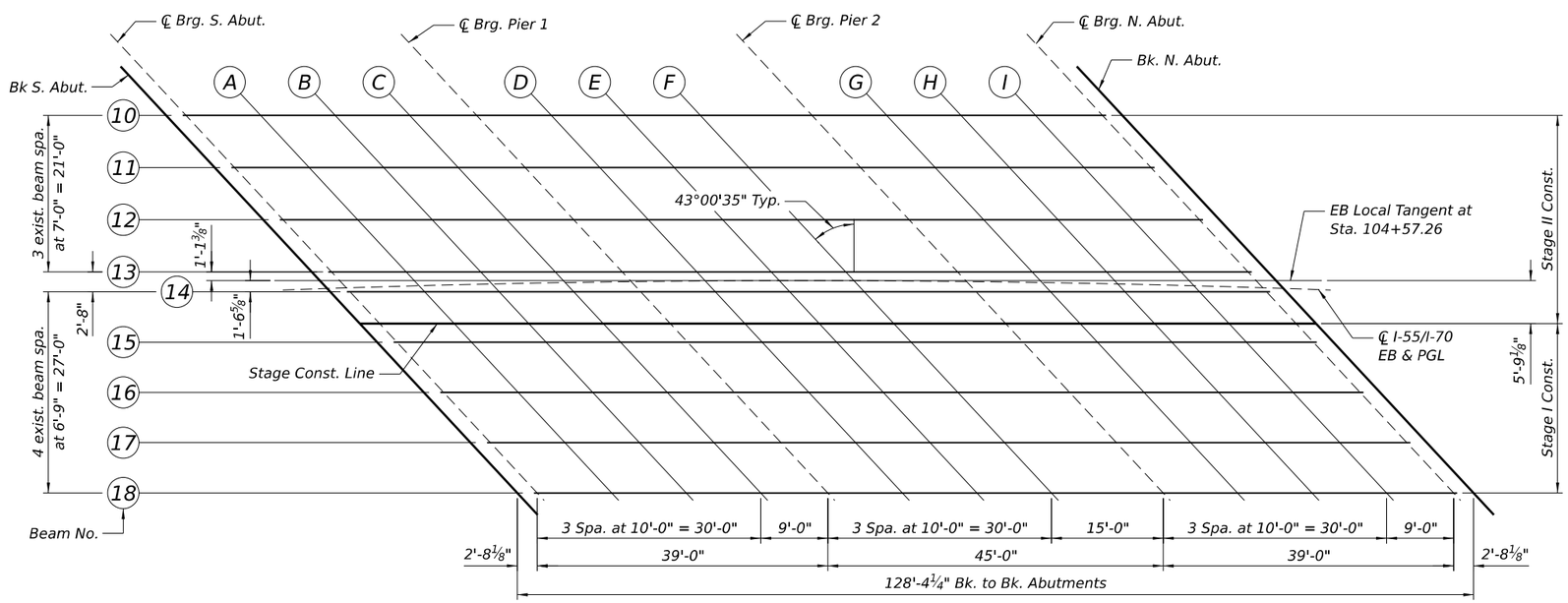

EASTBOUND LOCATION PLAN

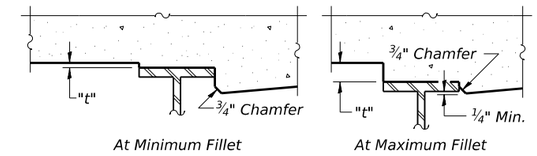

To determine "t": After all structural steel has been erected, elevations of the top flanges of the beams shall be taken at intervals shown to the left. These elevations subtracted from the "Theoretical Grade Elevations Adjusted for Dead Load Deflection" shown on sheets 7 thru 9 of 39, minus slab thickness, equals the fillet heights "t" above top flange of beams.

FILLET HEIGHTS

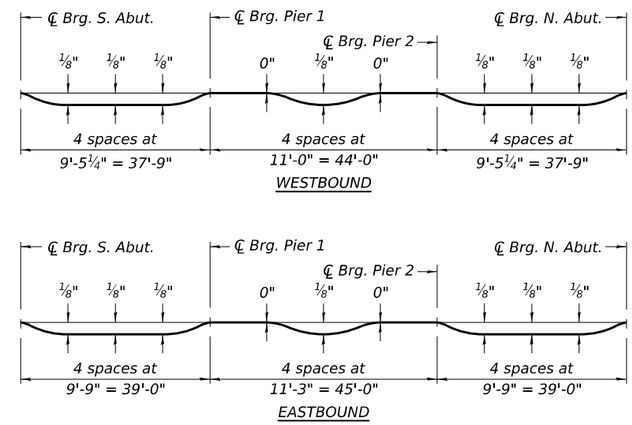

DEAD LOAD DEFLECTION DIAGRAM

(Includes weight of concrete only.)

Note:
The above deflections are not to be used in the field if the engineer is working from the grade elevations adjusted for dead load deflections as shown on sheets 7 thru 9 of 39.

MODEL: $MODELNAME$
FILE NAME: D876E84-008-0018-0019-TOS PLAN.dgn

Jacobs
525 West Monroe
Suite 1600
Chicago, IL 60661
(312) 251-3000

USER NAME = jacobspw18lcs09$	DESIGNED - CJF	REVISED -	
	DRAWN - EAK	REVISED -	
PLOT SCALE = 0.16666667 ' / in.	CHECKED - ED	REVISED -	
PLOT DATE = 12/4/2025	DATE - 2025/10/03	REVISED -	

STATE OF ILLINOIS
DEPARTMENT OF TRANSPORTATION

TOP OF SLAB ELEVATIONS LAYOUT
STRUCTURE NO. 082–0018 (WB) & 082–0019 (EB)

SCALE: NTS | SHEET 6 OF 39 SHEETS | STA. | TO STA.

F.A.I. RTE.	SECTION	COUNTY	TOTAL SHEETS	SHEET NO.
70	Section82-(5,6)RS-2, 60-6RS-2	MADISON & ST. CLAIR	678	377
		CONTRACT NO. 76E84		
		ILLINOIS	FED. AID PROJECT	

BEAM 1

Location	Station	Offset	Theoretical Grade Elevations	Theoretical Grade Elevations Adjusted For Dead Load Deflection
Bk. S. Abut	103+10.24	-28.76	415.23	415.23
℄ Brg. S. Abut.	103+12.77	-28.71	415.23	415.23
A	103+22.72	-28.56	415.24	415.25
B	103+32.67	-28.42	415.25	415.26
C	103+42.62	-28.30	415.26	415.26
℄ Brg. Pier 1	103+50.33	-28.22	415.26	415.26
D	103+60.28	-28.13	415.27	415.27
E	103+70.23	-28.06	415.27	415.28
F	103+80.18	-28.00	415.28	415.28
℄ Brg. Pier 2	103+94.10	-27.95	415.28	415.28
G	104+04.05	-27.94	415.28	415.29
H	104+14.00	-27.94	415.28	415.30
I	104+23.96	-27.97	415.28	415.29
℄ Brg. N. Abut.	104+31.66	-27.99	415.28	415.28
Bk. N. Abut	104+34.21	-28.01	415.28	415.28

BEAM 2

Location	Station	Offset	Theoretical Grade Elevations	Theoretical Grade Elevations Adjusted For Dead Load Deflection
Bk. S. Abut	103+15.99	-21.91	415.13	415.13
℄ Brg. S. Abut.	103+18.52	-21.87	415.13	415.13
A	103+28.49	-21.73	415.14	415.15
B	103+38.45	-21.60	415.15	415.16
C	103+48.41	-21.49	415.15	415.16
℄ Brg. Pier 1	103+56.13	-21.41	415.16	415.16
D	103+66.09	-21.33	415.17	415.17
E	103+76.06	-21.27	415.17	415.18
F	103+86.02	-21.23	415.17	415.18
℄ Brg. Pier 2	103+99.96	-21.19	415.18	415.18
G	104+09.92	-21.19	415.18	415.19
H	104+19.88	-21.20	415.18	415.19
I	104+29.85	-21.24	415.18	415.19
℄ Brg. N. Abut.	104+37.56	-21.27	415.18	415.18
Bk. N. Abut	104+40.11	-21.29	415.17	415.17

BEAM 3

Location	Station	Offset	Theoretical Grade Elevations	Theoretical Grade Elevations Adjusted For Dead Load Deflection
Bk. S. Abut	103+21.76	-15.07	415.03	415.03
℄ Brg. S. Abut.	103+24.30	-15.03	415.03	415.03
A	103+34.27	-14.90	415.04	415.05
B	103+44.24	-14.78	415.05	415.06
C	103+54.22	-14.68	415.05	415.06
℄ Brg. Pier 1	103+61.95	-14.61	415.06	415.06
D	103+71.92	-14.55	415.06	415.07
E	103+81.90	-14.49	415.07	415.08
F	103+91.87	-14.46	415.07	415.08
℄ Brg. Pier 2	104+05.82	-14.44	415.07	415.07
G	104+15.80	-14.45	415.07	415.08
H	104+25.77	-14.47	415.07	415.09
I	104+35.75	-14.51	415.07	415.08
℄ Brg. N. Abut.	104+43.47	-14.56	415.07	415.07
Bk. N. Abut	104+46.02	-14.57	415.07	415.07

BEAM 4

Location	Station	Offset	Theoretical Grade Elevations	Theoretical Grade Elevations Adjusted For Dead Load Deflection
Bk. S. Abut	103+27.54	-8.24	414.93	414.93
℄ Brg. S. Abut.	103+30.08	-8.20	414.93	414.93
A	103+40.07	-8.08	414.94	414.95
B	103+50.05	-7.97	414.95	414.96
C	103+60.04	-7.88	414.95	414.96
℄ Brg. Pier 1	103+67.78	-7.82	414.96	414.96
D	103+77.79	-7.76	414.96	414.96
E	103+87.75	-7.72	414.96	414.97
F	103+97.74	-7.70	414.97	414.97
℄ Brg. Pier 2	104+11.71	-7.69	414.97	414.97
G	104+21.69	-7.71	414.97	414.97
H	104+31.68	-7.74	414.97	414.98
I	104+41.67	-7.80	414.96	414.97
℄ Brg. N. Abut.	104+49.40	-7.85	414.96	414.96
Bk. N. Abut	104+51.95	-7.87	414.96	414.96

STAGE CONST. LINE

Location	Station	Offset	Theoretical Grade Elevations	Theoretical Grade Elevations Adjusted For Dead Load Deflection
Bk. S. Abut	103+29.80	-5.58	414.89	414.89
℄ Brg. S. Abut.	103+32.34	-5.55	414.89	414.89
A	103+42.33	-5.42	414.90	414.91
B	103+52.32	-5.32	414.91	414.92
C	103+62.31	-5.23	414.91	414.92
℄ Brg. Pier 1	103+70.05	-5.18	414.92	414.92
D	103+80.04	-5.12	414.92	414.92
E	103+90.03	-5.09	414.92	414.93
F	104+00.02	-5.07	414.93	414.93
℄ Brg. Pier 2	104+14.00	-5.07	414.93	414.93
G	104+23.99	-5.09	414.93	414.93
H	104+33.98	-5.13	414.92	414.94
I	104+43.97	-5.18	414.92	414.93
℄ Brg. N. Abut.	104+51.71	-5.24	414.92	414.92
Bk. N. Abut	104+54.27	-5.26	414.92	414.92

BEAM 5

Location	Station	Offset	Theoretical Grade Elevations	Theoretical Grade Elevations Adjusted For Dead Load Deflection
Bk. S. Abut	103+33.34	-1.41	414.83	414.83
℄ Brg. S. Abut.	103+35.88	-1.38	414.83	414.83
A	103+45.88	-1.26	414.84	414.85
B	103+55.87	-1.17	414.84	414.86
C	103+65.87	-1.09	414.85	414.86
℄ Brg. Pier 1	103+73.62	-1.04	414.85	414.85
D	103+83.62	-0.99	414.86	414.86
E	103+93.62	-0.95	414.86	414.87
F	104+03.61	-0.94	414.86	414.87
℄ Brg. Pier 2	104+17.60	-0.95	414.86	414.86
G	104+27.60	-0.98	414.86	414.87
H	104+37.60	-1.02	414.86	414.87
I	104+47.60	-1.09	414.86	414.87
℄ Brg. N. Abut.	104+55.34	-1.15	414.85	414.85
Bk. N. Abut	104+57.90	-1.17	414.85	414.85

℄ I-55/I-70 WB & PGL

Location	Station	Offset	Theoretical Grade Elevations	Theoretical Grade Elevations Adjusted For Dead Load Deflection
Bk. S. Abut	103+34.54	0.00	414.81	414.81
℄ Brg. S. Abut.	103+37.05	0.00	414.81	414.81
A	103+46.95	0.00	414.82	414.83
B	103+56.87	0.00	414.83	414.84
C	103+66.80	0.00	414.83	414.84
℄ Brg. Pier 1	103+74.51	0.00	414.84	414.84
D	103+84.47	0.00	414.84	414.85
E	103+94.43	0.00	414.85	414.85
F	104+04.43	0.00	414.85	414.85
℄ Brg. Pier 2	104+18.43	0.00	414.85	414.85
G	104+28.46	0.00	414.85	414.85
H	104+38.50	0.00	414.84	414.86
I	104+48.56	0.00	414.84	414.85
℄ Brg. N. Abut.	104+56.35	0.00	414.83	414.83
Bk. N. Abut	104+58.93	0.00	414.83	414.83

BEAM 6

Location	Station	Offset	Theoretical Grade Elevations	Theoretical Grade Elevations Adjusted For Dead Load Deflection
Bk. S. Abut	103+35.63	1.29	414.79	414.79
℄ Brg. S. Abut.	103+38.17	1.32	414.79	414.79
A	103+48.18	1.43	414.80	414.81
B	103+58.18	1.52	414.80	414.82
C	103+68.18	1.60	414.81	414.82
℄ Brg. Pier 1	103+75.93	1.64	414.81	414.81
D	103+85.94	1.69	414.82	414.82
E	103+95.94	1.72	414.82	414.83
F	104+05.94	1.73	414.82	414.83
℄ Brg. Pier 2	104+19.93	1.71	414.82	414.82
G	104+29.94	1.68	414.82	414.83
H	104+39.94	1.63	414.82	414.83
I	104+49.94	1.56	414.81	414.82
℄ Brg. N. Abut.	104+57.69	1.50	414.81	414.81
Bk. N. Abut	104+60.25	1.48	414.81	414.81

BEAM 7

Location	Station	Offset	Theoretical Grade Elevations	Theoretical Grade Elevations Adjusted For Dead Load Deflection
Bk. S. Abut	103+41.66	8.36	414.68	414.68
℄ Brg. S. Abut.	103+44.21	8.39	414.69	414.69
A	103+54.22	8.49	414.69	414.70
B	103+64.24	8.57	414.70	414.71
C	103+74.25	8.64	414.70	414.71
℄ Brg. Pier 1	103+82.01	8.67	414.71	414.71
D	103+92.03	8.71	414.71	414.71
E	104+02.04	8.73	414.71	414.72
F	104+12.06	8.72	414.71	414.72
℄ Brg. Pier 2	104+26.07	8.69	414.71	414.71
G	104+36.08	8.65	414.71	414.72
H	104+46.10	8.59	414.71	414.72
I	104+56.11	8.51	414.70	414.71
℄ Brg. N. Abut.	104+63.87	8.44	414.70	414.70
Bk. N. Abut	104+66.43	8.42	414.70	414.70

MODEL: $MODELNAME$
FILE NAME: D876E84-007-0018-0019-TOS ELEV 01.dgn

Jacobs
525 West Monroe
Suite 1600
Chicago, IL 60661
(312) 251-3000

USER NAME = jacobspw18lcs09$	DESIGNED - CJF	REVISED -	
	DRAWN - EAK	REVISED -	
PLOT SCALE = 0.16666667 ' / in.	CHECKED - ED	REVISED -	
PLOT DATE = 12/4/2025	DATE - 2025/10/03	REVISED -	

STATE OF ILLINOIS
DEPARTMENT OF TRANSPORTATION

TOP OF SLAB ELEVATIONS
STRUCTURE NO. 082-0018 (WB) & 082-0019 (EB)

SCALE: NTS | SHEET 7 OF 39 SHEETS | STA. | TO STA.

F.A.I. RTE.	SECTION	COUNTY	TOTAL SHEETS	SHEET NO.
70	Section82-(5,6)RS-2, 60-6RS-2	MADISON & ST. CLAIR	678	378

CONTRACT NO. 76E84

ILLINOIS | FED. AID PROJECT

BEAM 8

Location	Station	Offset	Theoretical Grade Elevations	Theoretical Grade Elevations Adjusted For Dead Load Deflection
Bk. S. Abut	103+47.71	15.43	414.58	414.58
℄ Brg. S. Abut.	103+50.26	15.45	414.58	414.58
A	103+60.28	15.54	414.59	414.60
B	103+70.31	15.61	414.59	414.61
C	103+80.34	15.67	414.60	414.60
℄ Brg. Pier 1	103+88.11	15.70	414.60	414.60
D	103+98.14	15.72	414.60	414.61
E	104+08.16	15.73	414.60	414.61
F	104+18.19	15.72	414.60	414.61
℄ Brg. Pier 2	104+32.22	15.67	414.60	414.60
G	104+42.25	15.62	414.60	414.61
H	104+52.27	15.55	414.59	414.61
I	104+62.30	15.46	414.59	414.60
℄ Brg. N. Abut.	104+70.06	15.38	414.59	414.59
Bk. N. Abut	104+72.63	15.35	414.58	414.58

BEAM 9

Location	Station	Offset	Theoretical Grade Elevations	Theoretical Grade Elevations Adjusted For Dead Load Deflection
Bk. S. Abut	103+53.77	22.48	414.47	414.47
℄ Brg. S. Abut.	103+56.32	22.51	414.48	414.48
A	103+66.36	22.59	414.48	414.49
B	103+76.40	22.65	414.49	414.50
C	103+86.44	22.69	414.49	414.50
℄ Brg. Pier 1	103+94.22	22.71	414.49	414.49
D	104+04.26	22.73	414.49	414.50
E	104+14.30	22.72	414.49	414.50
F	104+24.34	22.70	414.49	414.50
℄ Brg. Pier 2	104+38.38	22.64	414.49	414.49
G	104+48.42	22.58	414.49	414.49
H	104+58.46	22.49	414.48	414.50
I	104+68.50	22.40	414.48	414.49
℄ Brg. N. Abut.	104+76.27	22.31	414.47	414.47
Bk. N. Abut	104+78.84	22.28	414.47	414.47

BEAM 10

Location	Station	Offset	Theoretical Grade Elevations	Theoretical Grade Elevations Adjusted For Dead Load Deflection
Bk. S. Abut	103+60.44	-22.93	414.65	414.65
℄ Brg. S. Abut.	103+63.10	-22.89	414.65	414.65
A	103+73.06	-22.73	414.65	414.66
B	103+83.02	-22.60	414.65	414.67
C	103+92.98	-22.47	414.65	414.66
℄ Brg. Pier 1	104+01.95	-22.38	414.65	414.65
D	104+11.91	-22.29	414.65	414.65
E	104+21.87	-22.22	414.65	414.65
F	104+31.83	-22.17	414.64	414.65
℄ Brg. Pier 2	104+46.77	-22.12	414.63	414.63
G	104+56.73	-22.11	414.62	414.63
H	104+66.69	-22.12	414.62	414.63
I	104+76.66	-22.15	414.61	414.62
℄ Brg. N. Abut.	104+85.62	-22.18	414.60	414.60
Bk. N. Abut	104+88.29	-22.20	414.60	414.60

BEAM 11

Location	Station	Offset	Theoretical Grade Elevations	Theoretical Grade Elevations Adjusted For Dead Load Deflection
Bk. S. Abut	103+66.83	-15.83	414.54	414.54
℄ Brg. S. Abut.	103+69.50	-15.79	414.54	414.54
A	103+79.47	-15.64	414.54	414.56
B	103+89.44	-15.51	414.54	414.56
C	103+99.42	-15.41	414.54	414.55
℄ Brg. Pier 1	104+08.39	-15.32	414.54	414.54
D	104+18.36	-15.24	414.54	414.54
E	104+28.34	-15.19	414.53	414.54
F	104+38.31	-15.14	414.53	414.53
℄ Brg. Pier 2	104+53.27	-15.11	414.52	414.52
G	104+63.24	-15.12	414.51	414.52
H	104+73.22	-15.13	414.50	414.52
I	104+83.19	-15.17	414.49	414.50
℄ Brg. N. Abut.	104+92.17	-15.22	414.48	414.48
Bk. N. Abut	104+94.84	-15.24	414.48	414.48

BEAM 12

Location	Station	Offset	Theoretical Grade Elevations	Theoretical Grade Elevations Adjusted For Dead Load Deflection
Bk. S. Abut	103+73.24	-8.73	414.43	414.43
℄ Brg. S. Abut.	103+75.91	-8.69	414.43	414.43
A	103+85.90	-8.56	414.43	414.45
B	103+95.88	-8.44	414.43	414.45
C	104+05.86	-8.34	414.43	414.44
℄ Brg. Pier 1	104+14.85	-8.27	414.43	414.43
D	104+24.84	-8.20	414.43	414.43
E	104+34.82	-8.16	414.42	414.43
F	104+44.81	-8.13	414.41	414.42
℄ Brg. Pier 2	104+59.79	-8.11	414.40	414.40
G	104+69.77	-8.13	414.40	414.40
H	104+79.76	-8.16	414.39	414.40
I	104+89.74	-8.20	414.38	414.39
℄ Brg. N. Abut.	104+98.73	-8.26	414.36	414.36
Bk. N. Abut	105+01.40	-8.26	414.36	414.36

BEAM 13

Location	Station	Offset	Theoretical Grade Elevations	Theoretical Grade Elevations Adjusted For Dead Load Deflection
Bk. S. Abut	103+79.66	-1.64	414.33	414.33
℄ Brg. S. Abut.	103+82.34	-1.60	414.33	414.33
A	103+92.34	-1.48	414.32	414.34
B	104+02.33	-1.38	414.32	414.34
C	104+12.33	-1.29	414.32	414.33
℄ Brg. Pier 1	104+21.33	-1.23	414.32	414.32
D	104+31.33	-1.17	414.31	414.32
E	104+41.32	-1.13	414.31	414.32
F	104+51.32	-1.12	414.30	414.31
℄ Brg. Pier 2	104+66.32	-1.12	414.29	414.29
G	104+76.32	-1.14	414.28	414.29
H	104+86.31	-1.19	414.27	414.28
I	104+96.31	-1.25	414.26	414.27
℄ Brg. N. Abut.	105+05.31	-1.31	414.25	414.25
Bk. N. Abut	105+07.99	-1.34	414.24	414.24

℄ I-55/I-70 EB & PGL

Location	Station	Offset	Theoretical Grade Elevations	Theoretical Grade Elevations Adjusted For Dead Load Deflection
Bk. S. Abut	103+81.15	0.00	414.30	414.30
℄ Brg. S. Abut.	103+83.80	0.00	414.30	414.30
A	103+93.69	0.00	414.30	414.31
B	104+03.59	0.00	414.30	414.32
C	104+13.51	0.00	414.30	414.31
℄ Brg. Pier 1	104+22.46	0.00	414.30	414.30
D	104+32.41	0.00	414.29	414.30
E	104+42.38	0.00	414.29	414.30
F	104+52.36	0.00	414.28	414.29
℄ Brg. Pier 2	104+67.37	0.00	414.27	414.27
G	104+77.39	0.00	414.26	414.27
H	104+87.43	0.00	414.25	414.26
I	104+97.49	0.00	414.24	414.25
℄ Brg. N. Abut.	105+06.56	0.00	414.23	414.23
Bk. N. Abut	105+09.26	0.00	414.22	414.22

BEAM 14

Location	Station	Offset	Theoretical Grade Elevations	Theoretical Grade Elevations Adjusted For Dead Load Deflection
Bk. S. Abut	103+82.12	1.06	414.28	414.28
℄ Brg. S. Abut.	103+84.79	1.10	414.28	414.28
A	103+94.79	1.21	414.28	414.29
B	104+04.80	1.31	414.28	414.30
C	104+14.80	1.40	414.28	414.28
℄ Brg. Pier 1	104+23.80	1.46	414.28	414.28
D	104+33.80	1.51	414.27	414.27
E	104+43.80	1.54	414.26	414.27
F	104+53.81	1.55	414.26	414.26
℄ Brg. Pier 2	104+68.81	1.54	414.25	414.25
G	104+78.81	1.51	414.24	414.24
H	104+88.82	1.47	414.23	414.24
I	104+98.82	1.40	414.21	414.23
℄ Brg. N. Abut.	105+07.82	1.33	414.20	414.20
Bk. N. Abut	105+10.50	1.31	414.20	414.20

STAGE CONST. LINE

Location	Station	Offset	Theoretical Grade Elevations	Theoretical Grade Elevations Adjusted For Dead Load Deflection
Bk. S. Abut	103+85.99	5.32	414.22	414.22
℄ Brg. S. Abut.	103+88.67	5.35	414.22	414.22
A	103+89.67	5.46	414.22	414.23
B	104+08.68	5.55	414.21	414.23
C	104+18.69	5.63	414.21	414.22
℄ Brg. Pier 1	104+27.70	5.68	414.21	414.21
D	104+37.71	5.73	414.20	414.21
E	104+47.72	5.75	414.20	414.21
F	104+57.73	5.76	414.19	414.20
℄ Brg. Pier 2	104+72.75	5.74	414.18	414.18
G	104+82.76	5.70	414.17	414.17
H	104+92.77	5.65	414.16	414.17
I	105+02.78	5.58	414.14	414.15
℄ Brg. N. Abut.	105+11.78	5.50	414.13	414.13
Bk. N. Abut	105+14.46	5.47	414.13	414.13

BEAM 15

Location	Station	Offset	Theoretical Grade Elevations	Theoretical Grade Elevations Adjusted For Dead Load Deflection
Bk. S. Abut	103+88.33	7.89	414.18	414.18
℄ Brg. S. Abut.	103+91.01	7.92	414.18	414.18
A	104+01.03	8.03	414.18	414.19
B	104+11.04	8.12	414.17	414.19
C	104+21.05	8.19	414.17	414.18
℄ Brg. Pier 1	104+30.07	8.24	414.17	414.17
D	104+40.08	8.28	414.16	414.17
E	104+50.09	8.30	414.16	414.16
F	104+60.11	8.30	414.15	414.15
℄ Brg. Pier 2	104+75.13	8.28	414.13	414.13
G	104+85.14	8.24	414.12	414.13
H	104+95.16	8.18	414.11	414.13
I	105+05.17	8.10	414.10	414.11
℄ Brg. N. Abut.	105+14.19	8.02	414.09	414.09
Bk. N. Abut	105+16.87	8.00	414.09	414.09

BEAM 16

Location	Station	Offset	Theoretical Grade Elevations	Theoretical Grade Elevations Adjusted For Dead Load Deflection
Bk. S. Abut	103+94.56	14.71	414.07	414.07
℄ Brg. S. Abut.	103+97.25	14.74	414.07	414.07
A	104+07.27	14.84	414.07	414.08
B	104+17.30	14.92	414.07	414.08
C	104+27.32	14.98	414.06	414.07
℄ Brg. Pier 1	104+36.35	15.02	414.06	414.06
D	104+46.37	15.04	414.05	414.06
E	104+56.40	15.05	414.05	414.05
F	104+66.43	15.05	414.04	414.04
℄ Brg. Pier 2	104+81.46	15.00	414.02	414.02
G	104+91.49	14.95	414.01	414.02
H	105+01.52	14.88	414.00	414.01
I	105+11.54	14.80	413.99	414.00
℄ Brg. N. Abut.	105+20.57	14.71	413.97	413.97
Bk. N. Abut	105+23.25	14.68	413.97	413.97

BEAM 17

Location	Station	Offset	Theoretical Grade Elevations	Theoretical Grade Elevations Adjusted For Dead Load Deflection
Bk. S. Abut	104+00.81	21.53	413.97	413.97
℄ Brg. S. Abut.	104+03.49	21.55	413.97	413.97
A	104+13.53	21.64	413.96	413.97
B	104+23.57	21.71	413.96	413.97
C	104+33.61	21.76	413.95	413.96
℄ Brg. Pier 1	104+42.64	21.79	413.95	413.95
D	104+52.68	21.80	413.94	413.95
E	104+62.72	21.80	413.93	413.94
F	104+72.76	21.78	413.93	413.93
℄ Brg. Pier 2	104+87.81	21.72	413.91	413.91
G	104+97.85	21.66	413.90	413.91
H	105+07.89	21.58	413.89	413.90
I	105+17.93	21.48	413.87	413.88
℄ Brg. N. Abut.	105+26.96	21.38	413.86	413.86
Bk. N. Abut	105+29.65	21.35	413.86	413.86

BEAM 18

Location	Station	Offset	Theoretical Grade Elevations	Theoretical Grade Elevations Adjusted For Dead Load Deflection
Bk. S. Abut	104+07.07	28.34	413.86	413.86
℄ Brg. S. Abut.	104+09.76	28.36	413.86	413.86
A	104+19.81	28.43	413.86	413.87
B	104+29.86	28.49	413.85	413.87
C	104+39.91	28.53	413.85	413.85
℄ Brg. Pier 1	104+48.95	28.55	413.84	413.84
D	104+59.00	28.55	413.83	413.84
E	104+69.05	28.54	413.82	413.83
F	104+79.10	28.51	413.81	413.82
℄ Brg. Pier 2	104+94.18	28.44	413.80	413.80
G	105+04.23	28.36	413.79	413.79
H	105+14.28	28.27	413.77	413.79
I	105+24.33	28.16	413.76	413.77
℄ Brg. N. Abut.	105+33.37	28.05	413.75	413.75
Bk. N. Abut	105+35.75	29.14	413.72	413.72

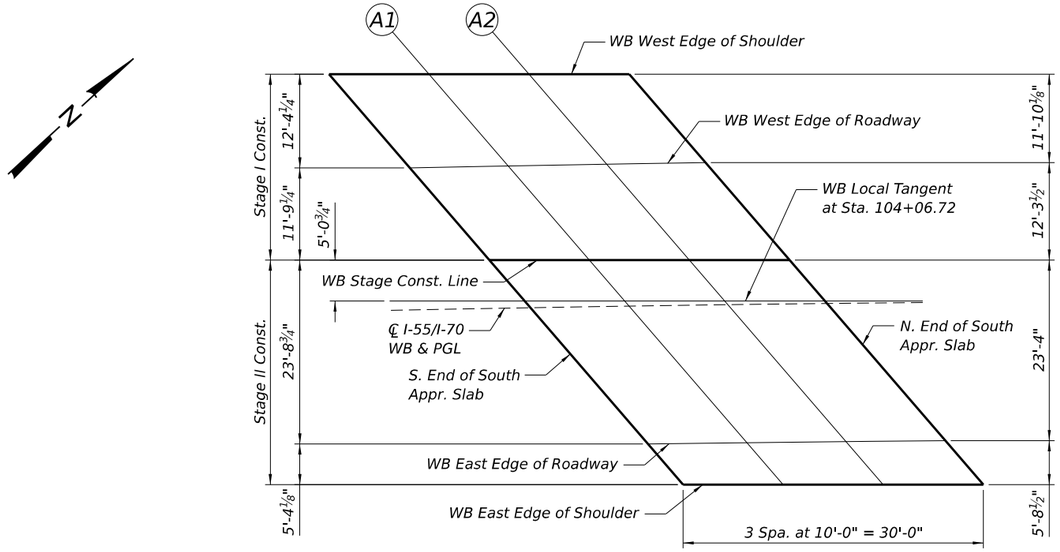

WESTBOUND SOUTH APPROACH SLAB PLAN

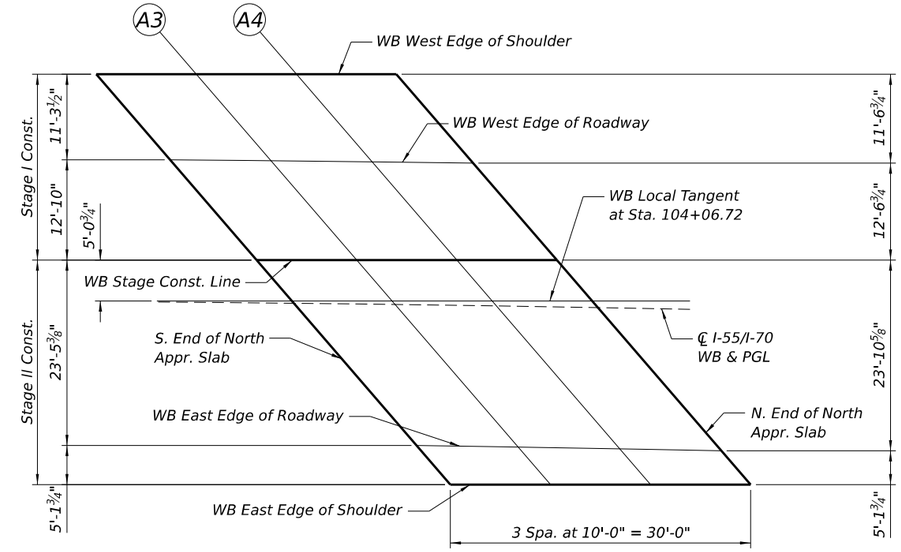

WESTBOUND NORTH APPROACH SLAB PLAN

WB WEST EDGE OF SHOULDER

Location	Station	Offset	Theoretical Grade Elevations
S. End of South Appr. Slab	102+80.66	-30.58	415.21
A1	102+90.60	-30.37	415.22
A2	103+00.55	-30.18	415.23
N. End of South Appr. Slab	103+10.49	-30.00	415.24
S. End of North Appr. Slab	104+31.80	-29.24	415.30
A3	104+41.75	-29.30	415.30
A4	104+51.69	-29.37	415.30
N. End of North Appr. Slab	104+61.64	-29.45	415.29

WB WEST EDGE OF ROADWAY

Location	Station	Offset	Theoretical Grade Elevations
S. End of South Appr. Slab	102+91.14	-18.00	415.03
A1	103+00.89	-18.00	415.04
A2	103+10.76	-18.00	415.06
N. End of South Appr. Slab	103+20.59	-18.00	415.07
S. End of North Appr. Slab	104+41.67	-18.00	415.12
A3	104+51.70	-18.00	415.12
A4	104+61.75	-18.00	415.11
N. End of North Appr. Slab	104+71.81	-18.00	415.10

WB STAGE CONSTRUCTION LINE

Location	Station	Offset	Theoretical Grade Elevations
S. End of South Appr. Slab	103+01.16	-6.04	414.86
A1	103+11.14	-5.86	414.87
A2	103+21.13	-5.70	414.88
N. End of South Appr. Slab	103+31.12	-5.56	414.89
S. End of North Appr. Slab	104+52.94	-5.25	414.92
A3	104+62.93	-5.34	414.91
A4	104+72.92	-5.44	414.91
N. End of North Appr. Slab	104+82.91	-5.57	414.90

℄ I-55/I-70 WB & PGL

Location	Station	Offset	Theoretical Grade Elevations
S. End of South Appr. Slab	103+06.23	0.00	414.77
A1	103+16.09	0.00	414.78
A2	103+25.96	0.00	414.80
N. End of South Appr. Slab	103+35.85	0.00	414.81
S. End of North Appr. Slab	104+58.93	0.00	414.83
A3	104+67.68	0.00	414.83
A4	104+77.79	0.00	414.82
N. End of North Appr. Slab	104+87.90	0.00	414.81

WB EAST EDGE OF ROADWAY

Location	Station	Offset	Theoretical Grade Elevations
S. End of South Appr. Slab	103+21.46	18.00	414.51
A1	103+31.37	18.00	414.52
A2	103+41.30	18.00	414.53
N. End of South Appr. Slab	103+51.24	18.00	414.54
S. End of North Appr. Slab	104+73.66	18.00	414.54
A3	104+83.80	18.00	414.53
A4	104+93.96	18.00	414.52
N. End of North Appr. Slab	105+04.14	18.00	414.51

WB EAST EDGE OF SHOULDER

Location	Station	Offset	Theoretical Grade Elevations
S. End of South Appr. Slab	103+26.06	23.41	414.43
A1	103+36.10	23.54	414.44
A2	103+46.14	23.66	414.45
N. End of South Appr. Slab	103+56.18	23.75	414.46
S. End of North Appr. Slab	104+78.62	23.53	414.45
A3	104+88.66	23.39	414.44
A4	104+98.70	23.24	414.44
N. End of North Appr. Slab	105+08.74	23.07	414.43

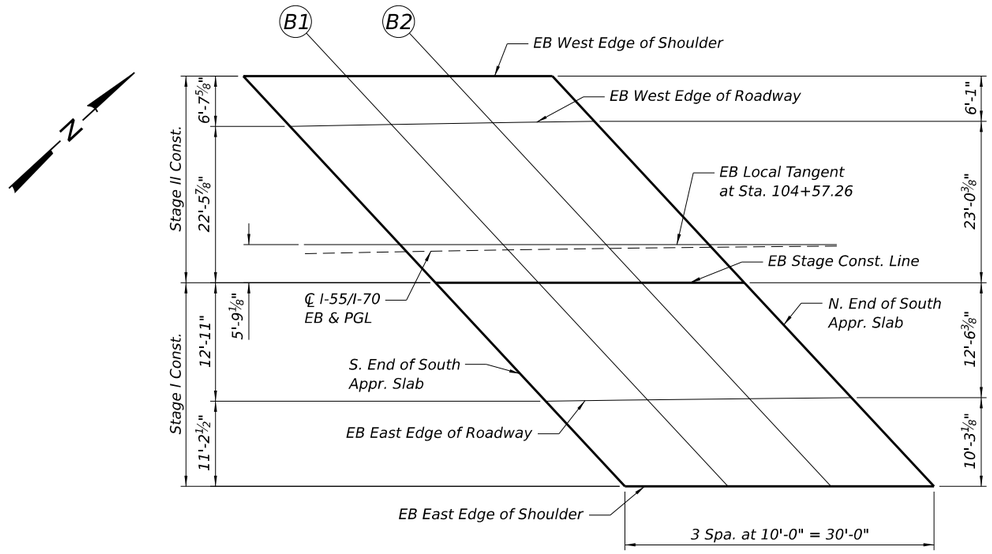

EASTBOUND SOUTH APPROACH SLAB PLAN

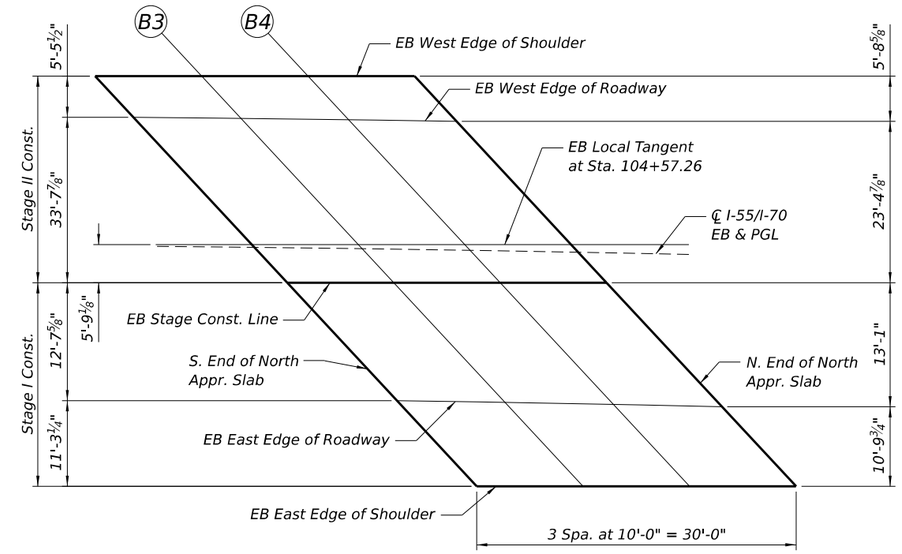

EASTBOUND NORTH APPROACH SLAB PLAN

EB WEST EDGE OF SHOULDER

Location	Station	Offset	Theoretical Grade Elevations
S. End of South Appr. Slab	103+30.79	-24.76	414.66
B1	103+40.75	-24.55	414.66
B2	103+50.70	-24.36	414.67
N. End of South Appr. Slab	103+60.66	-24.18	414.67
S. End of North Appr. Slab	104+87.12	-23.44	414.62
B3	104+95.72	-23.49	414.61
B4	105+05.68	-23.57	414.59
N. End of North Appr. Slab	105+15.63	-23.66	414.58

EB WEST EDGE OF ROADWAY

Location	Station	Offset	Theoretical Grade Elevations
S. End of South Appr. Slab	103+36.81	-18.00	414.56
B1	103+46.62	-18.00	414.56
B2	103+56.40	-18.00	414.57
N. End of South Appr. Slab	103+66.22	-18.00	414.58
S. End of North Appr. Slab	104+90.86	-18.00	414.53
B3	105+00.90	-18.00	414.51
B4	105+10.94	-18.00	414.50
N. End of North Appr. Slab	105+21.01	-18.00	414.48

℄ I-55/I-70 EB & PGL

Location	Station	Offset	Theoretical Grade Elevations
S. End of South Appr. Slab	103+52.93	0.00	414.29
B1	103+62.77	0.00	414.29
B2	103+72.63	0.00	414.30
N. End of South Appr. Slab	103+82.50	0.00	414.30
S. End of North Appr. Slab	105+07.88	0.00	414.22
B3	105+17.97	0.00	414.21
B4	105+28.08	0.00	414.19
N. End of North Appr. Slab	105+38.20	0.00	414.17

EB STAGE CONSTRUCTION LINE

Location	Station	Offset	Theoretical Grade Elevations
S. End of South Appr. Slab	103+57.33	4.89	414.21
B1	103+67.34	5.06	414.22
B2	103+77.35	5.20	414.22
N. End of South Appr. Slab	103+87.35	5.33	414.22
S. End of North Appr. Slab	105+13.00	5.39	414.13
B3	105+23.10	5.38	414.12
B4	105+33.11	5.26	414.10
N. End of North Appr. Slab	105+43.12	5.12	414.08

EB EAST EDGE OF ROADWAY

Location	Station	Offset	Theoretical Grade Elevations
S. End of South Appr. Slab	103+69.19	18.00	414.02
B1	103+79.09	18.00	414.02
B2	103+89.00	18.00	414.02
N. End of South Appr. Slab	103+98.93	18.00	414.02
S. End of North Appr. Slab	105+25.05	18.00	413.92
B3	105+35.20	18.00	413.90
B4	105+45.37	18.00	413.88
N. End of North Appr. Slab	105+55.56	18.00	413.86

EB EAST EDGE OF SHOULDER

Location	Station	Offset	Theoretical Grade Elevations
S. End of South Appr. Slab	103+79.52	29.36	413.84
B1	103+89.57	29.48	413.84
B2	103+99.61	29.58	413.84
N. End of South Appr. Slab	104+09.66	29.66	413.84
S. End of North Appr. Slab	105+35.75	29.14	413.72
B3	105+45.79	28.99	413.71
B4	105+55.84	28.82	413.69
N. End of North Appr. Slab	105+65.88	28.63	413.67

Notes:
See sheet 13 of 39 for superstructure details and Bill of Materials.
Bars indicated thus 24x4-#5 etc. indicates 24 lines of bars with 4 lengths per line.
For Location of DS-11 Scuppers and Floor Drains, see sheet 1 of 39.

*See Field Cutting Diagram on sheet 13 of 39.

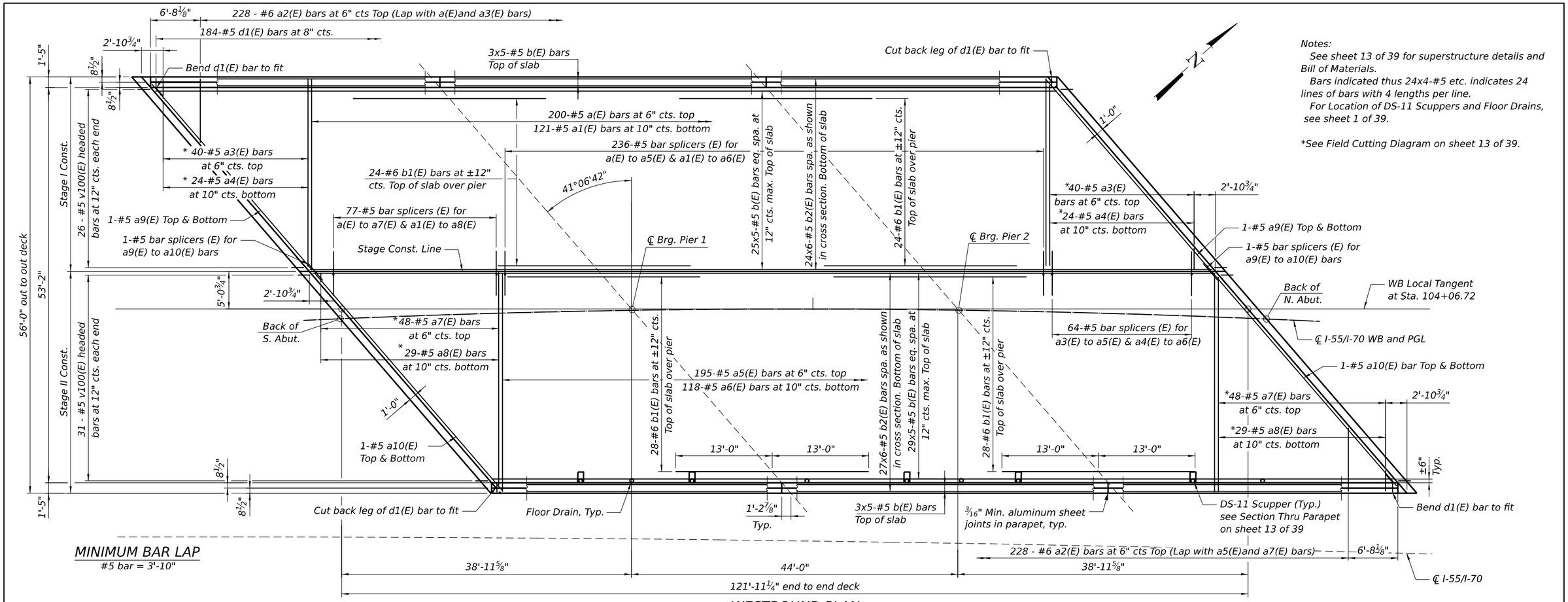

MINIMUM BAR LAP

#5 bar = 3'-10"

WESTBOUND PLAN

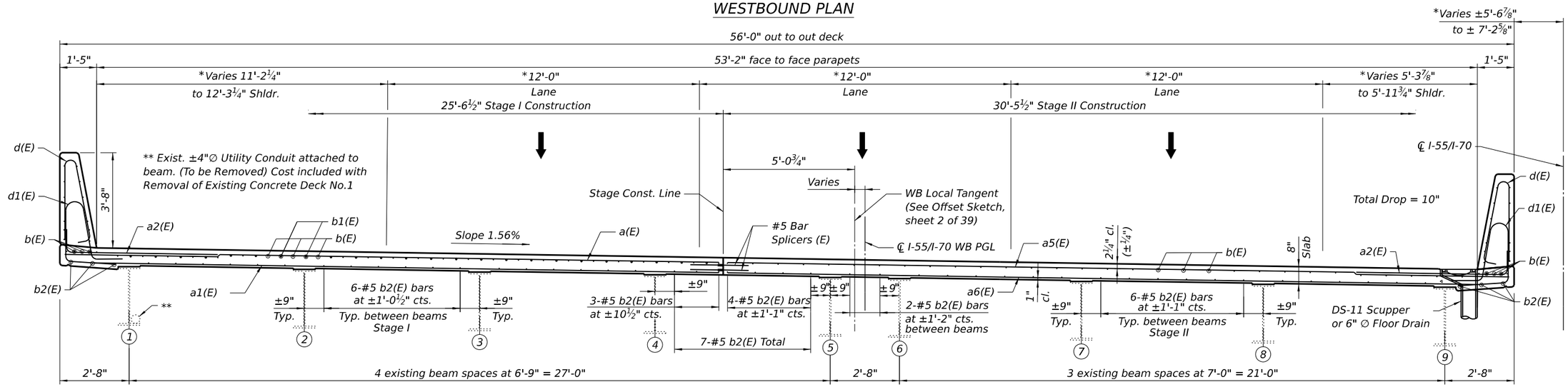

CROSS SECTION

(Looking North)
(Westbound)

* Indicates dimension is radial to ℄

MODEL: $MODELNAMES
FILE NAME: D876E84-013-00018-00019-WB SUPERSTRU.dgn

Jacobs
525 West Monroe
Suite 1600
Chicago, IL 60661
(312) 251-3000

USER NAME = jacobspw18lcs09$	DESIGNED - CJF	REVISED -	
	DRAWN - EAK	REVISED -	
PLOT SCALE = 0.16666667 ' / in.	CHECKED - ED	REVISED -	
PLOT DATE = 12/8/2025	DATE - 2025/10/03	REVISED -	

STATE OF ILLINOIS
DEPARTMENT OF TRANSPORTATION

WESTBOUND SUPERSTRUCTURE
STRUCTURE NO. 082–0018 (WB) & 082–0019 (EB)

SCALE: NTS | SHEET 12 OF 39 SHEETS | STA. | TO STA.

F.A.I. RTE.	SECTION	COUNTY	TOTAL SHEETS	SHEET NO.
70	Section82-(5,6)RS-2, 60-6RS-2	MADISON & ST. CLAIR	678	383

CONTRACT NO. 76E84
ILLINOIS | FED. AID PROJECT

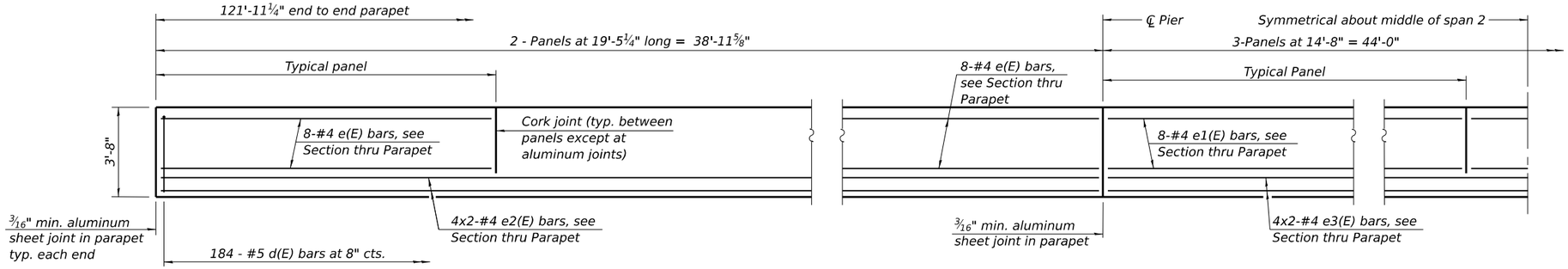

INSIDE ELEVATION OF PARAPET

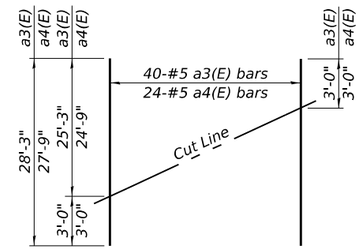

FIELD CUTTING DIAGRAM

Order a3(E) and a4(E) bars full length. Cut as shown and use remainder of bars in opposite end of deck.

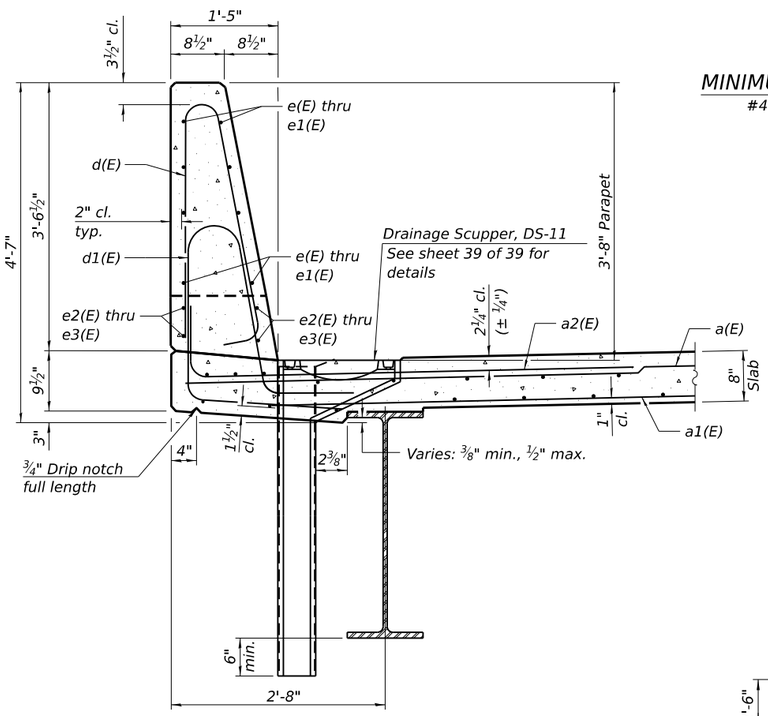

SECTION A-A THRU PARAPET

MINIMUM BAR LAP

#4 bar = 2'-2"

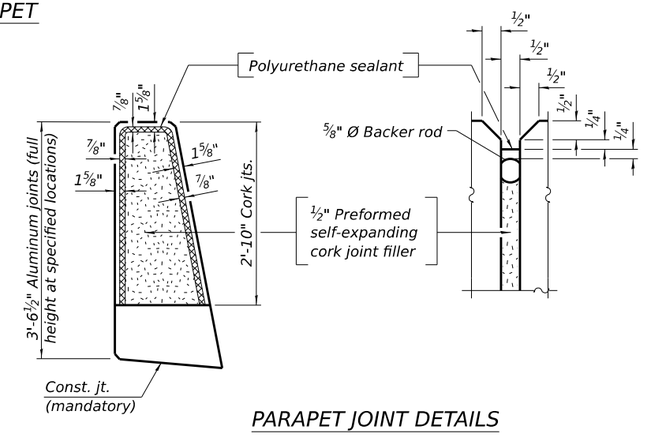

PARAPET JOINT DETAILS

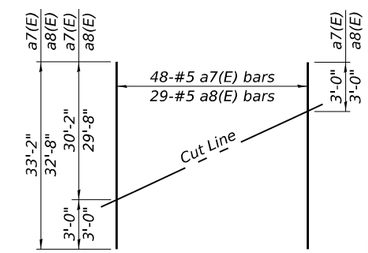

FIELD CUTTING DIAGRAM

Order a7(E) and a8(E) bars full length. Cut as shown and use remainder of bars in opposite end of deck.

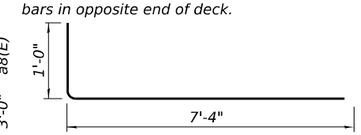

BAR a2(E)

SUPERSTRUCTURE BILL OF MATERIAL (WB)

Bar	No.	Size	Length	Shape
a(E)	200	#5	25'-3"	
a1(E)	121	#5	24'-9"	
a2(E)	456	#6	8'-4"	
a3(E)	40	#5	28'-3"	
a4(E)	24	#5	27'-9"	
a5(E)	195	#5	30'-2"	
a6(E)	118	#5	29'-8"	
a7(E)	48	#5	33'-2"	
a8(E)	29	#5	32'-8"	
a9(E)	4	#5	33'-7"	
a10(E)	4	#5	40'-1"	
a11(E)	40	#5	1'-6"	
b(E)	300	#5	27'-5"	
b1(E)	104	#6	26'-0"	
b2(E)	306	#5	23'-6"	
d(E)	368	#5	7'-0"	
d1(E)	368	#5	8'-2"	
e(E)	64	#4	19'-2"	
e1(E)	48	#4	14'-5"	
e2(E)	32	#4	20'-8"	
e3(E)	16	#4	23'-2"	
m10(E)	10	#6	33'-7"	
m11(E)	42	#6	8'-9"	
m12(E)	10	#6	3'-3"	
m13(E)	10	#6	40'-2"	
m14(E)	3	#6	3'-2"	
s10(E)	86	#5	8'-4"	
s11(E)	86	#5	11'-4"	
u(E)	9	#6	6'-8"	
u1(E)	3	#6	6'-9"	
v100(E)	114	#5	3'-1"	
Reinforcement Bars, Epoxy Coated			Lbs.	60,710
Concrete Superstructure			Cu. Yds.	272.6

Bars indicated thus 1 x 2-#4 etc. indicates 1 line of bars with 2 lengths per line.

Notes:

The 3/16" min. aluminum sheet shall be ASTM B 209 alloy 3003-H14 and coated with 5 mils of either bitumen paint or epoxy paint to minimize reaction with wet concrete. Cost included with Concrete Superstructure.

The polyurethane sealant shall be according to Article 1050.04 of the Std. Spec. and the color shall be gray.

Bar terminators paid for separately. See Total Bill of Material.

For Floor Drain details see Section Thru Parapet on sheet 15 of 39.

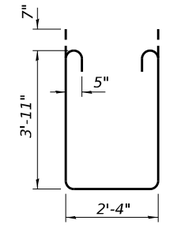

BAR s11(E)

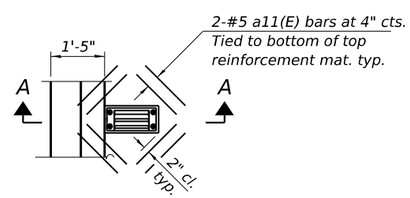

PLAN

Note:

Cut longitudinal reinforcement to clear drainage scuppers.

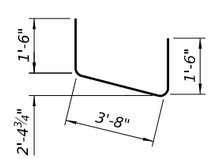

BAR u(E)

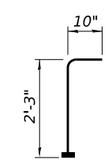

BAR v100(E)

(Headed. 114-#5 Bar terminators)

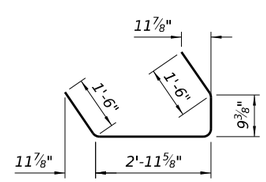

BAR u1(E)

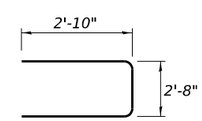

BAR s10(E)

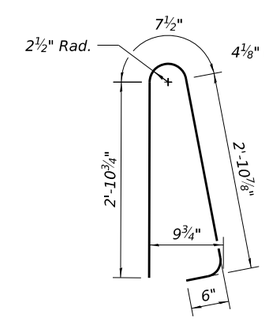

BAR d(E)

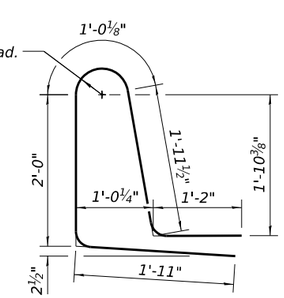

BAR d1(E)

MODEL: $MODELNAMES
FILE NAME: D876E84-014-0018-0019-WB SUPERSTRU DET.dgn

Jacobs
525 West Monroe
Suite 1600
Chicago, IL 60661
(312) 251-3000

USER NAME = jacobspw18lcs10$	DESIGNED - CJF	REVISED -	
	DRAWN - EAK	REVISED -	
PLOT SCALE = 0.16666667 ' / in.	CHECKED - ED	REVISED -	
PLOT DATE = 12/4/2025	DATE - 2025/10/03	REVISED -	

STATE OF ILLINOIS
DEPARTMENT OF TRANSPORTATION

WESTBOUND SUPERSTRUCTURE DETAILS
STRUCTURE NO. 082–0018 (WB) & 082–0019 (EB)

SCALE: NTS | SHEET 13 OF 39 SHEETS | STA. | TO STA.

F.A.I. RTE.	SECTION	COUNTY	TOTAL SHEETS	SHEET NO.
70	Section82-(5,6)RS-2, 60-6RS-2	MADISON & ST. CLAIR	678	384
		CONTRACT NO. 76E84		
		ILLINOIS	FED. AID PROJECT	

Notes:
See sheet 15 of 39 for superstructure details and Bill of Materials.
Bars indicated thus 24x4-#5 etc. indicates 24 lines of bars with 4 lengths per line.
For location of floor drains, see sheet 1 of 39.

*See Field Cutting Diagram on sheet 15 of 39.

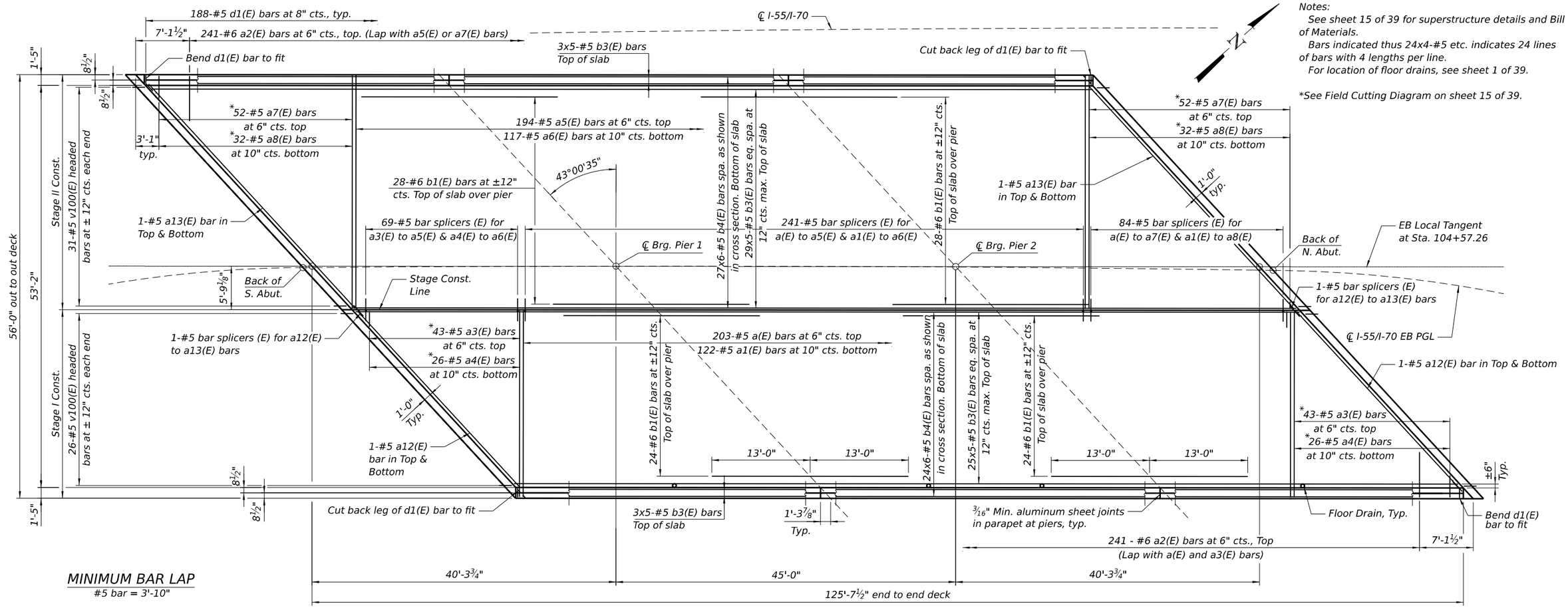

MINIMUM BAR LAP
#5 bar = 3'-10"

EASTBOUND PLAN

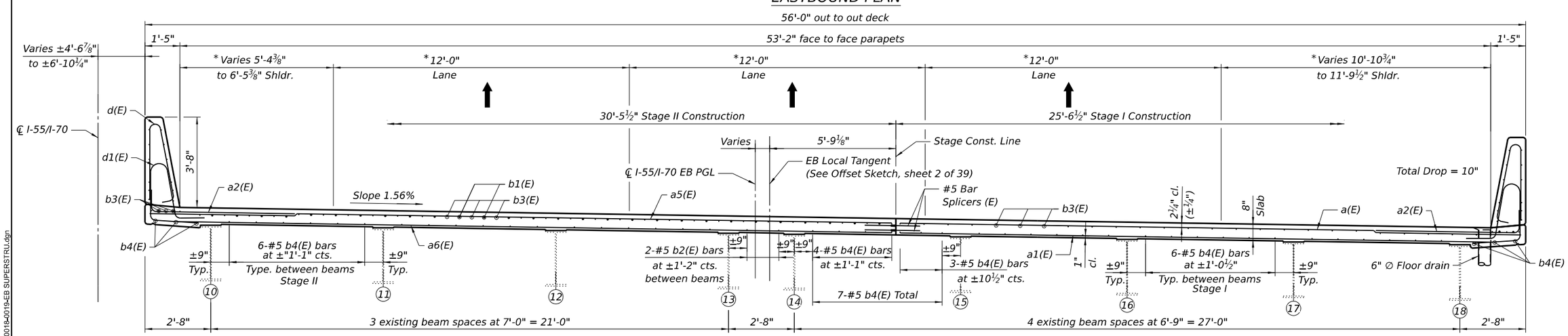

CROSS SECTION
(Looking North)
(Eastbound)

* Indicates dimension is radial to ℄

MODEL: $MODELNAMES
FILE NAME: D876E84-015-0018-0019-EB SUPERSTRU.dgn

Jacobs
525 West Monroe
Suite 1600
Chicago, IL 60661
(312) 251-3000

USER NAME = jacobspw18lcs09$	DESIGNED - CJF	REVISED -	
	DRAWN - EAK	REVISED -	
PLOT SCALE = 0.16666667 ' / in.	CHECKED - ED	REVISED -	
PLOT DATE = 12/9/2025	DATE - 2025/10/03	REVISED -	

STATE OF ILLINOIS
DEPARTMENT OF TRANSPORTATION

EASTBOUND SUPERSTRUCTURE
STRUCTURE NO. 082–0018 (WB) & 082–0019 (EB)

SCALE: NTS | SHEET 14 OF 39 SHEETS | STA. | TO STA.

F.A.I. RTE.	SECTION	COUNTY	TOTAL SHEETS	SHEET NO.
70	Section82-(5,6)RS-2, 60-6RS-2	MADISON & ST. CLAIR	678	385
		CONTRACT NO. 76E84		
		ILLINOIS	FED. AID PROJECT	

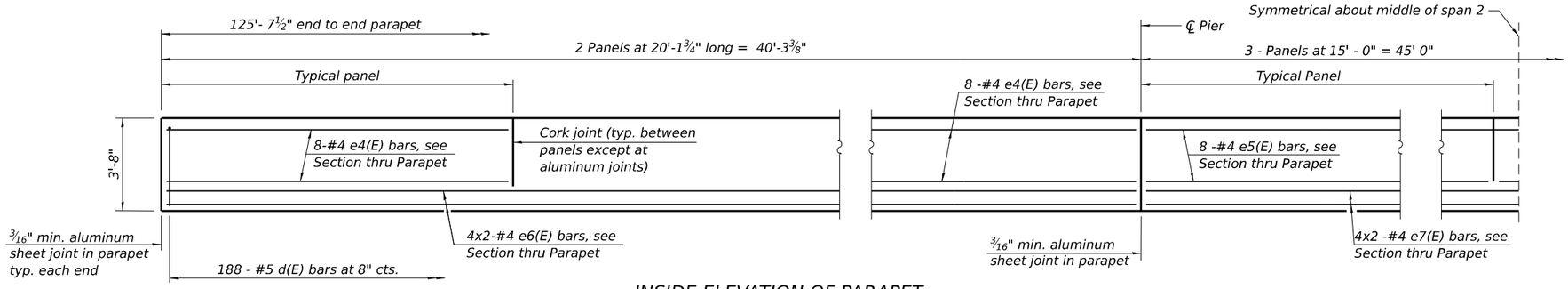

INSIDE ELEVATION OF PARAPET

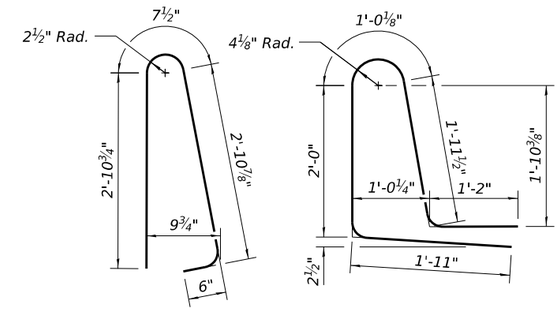

BAR d(E)

BAR d1(E)

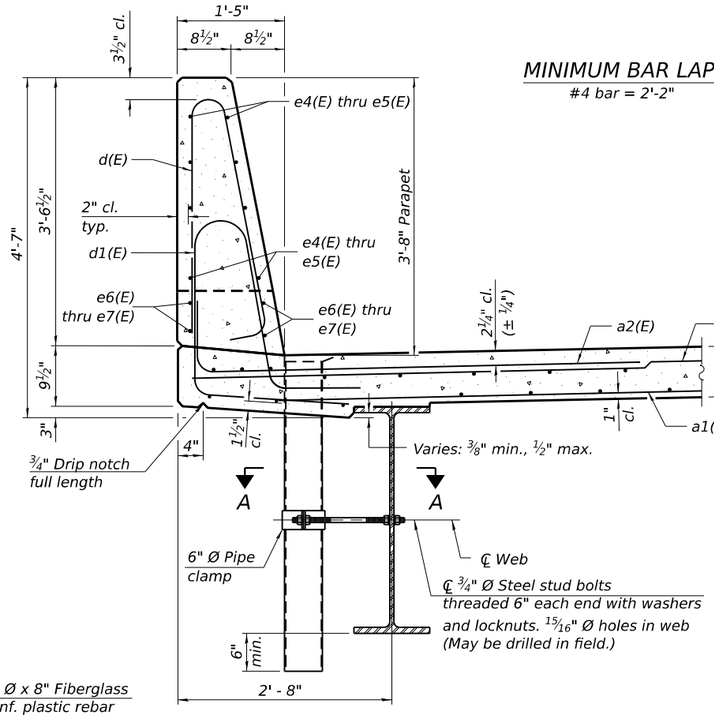

MINIMUM BAR LAP

#4 bar = 2'-2"

SECTION THRU PARAPET

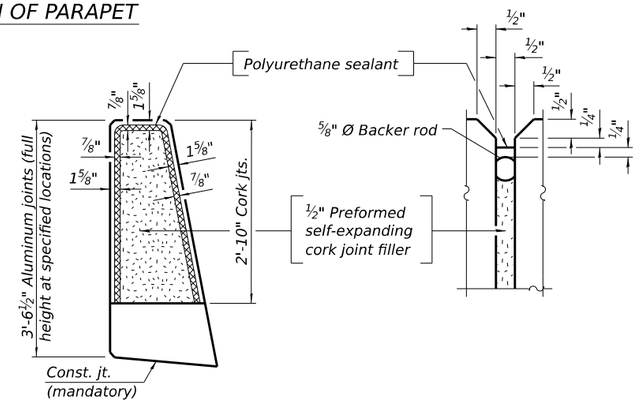

PARAPET JOINT DETAILS

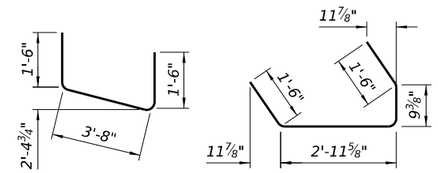

BAR u(E)

BAR u1(E)

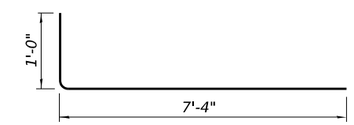

BAR a2(E)

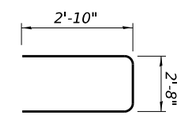

BAR s10(E)

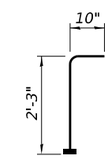

BAR v100(E)

(Headed. 114-#5 Bar terminators)

Notes:

Fiberglass pipe shall conform to ASTM D2996, with short-time rupture strength hoop tensile stress of 30,000 p.s.i. minimum.

The exterior surfaces of the floor drains shall be painted according to Article 506 with the finish coat as specified. The exterior surfaces of the drains shall be cleaned according to the Society of Protective Coating's Spec. SSPC-SP1 prior to painting.

The top portion of aluminum floor drains shall be coated with 5 mils of either bitumen paint or epoxy paint to minimize reaction with wet concrete.

The clamping device shall be galvanized according to AASHTO M 232. Cost of clamping device included with Floor Drains.

The 3/16" min. aluminum sheet shall be ASTM B 209 alloy 3003-H14 and coated with 5 mils of either bitumen paint or epoxy paint to minimize reaction with wet concrete. Cost included with Concrete Superstructure.

The polyurethane sealant shall be according to Article 1050.04 of the Std. Spec. and the color shall be gray.

Bar terminators paid for separately. See Total Bill of Material.

SUPERSTRUCTURE BILL OF MATERIAL (EB)

Bar	No.	Size	Length	Shape
a(E)	203	#5	25'-3"	
a1(E)	122	#5	24'-9"	
a2(E)	482	#6	8'-4"	
a3(E)	43	#5	28'-3"	
a4(E)	26	#5	27'-9"	
a5(E)	194	#5	30'-2"	
a6(E)	117	#5	29'-8"	
a7(E)	52	#5	33'-2"	
a8(E)	32	#5	32'-8"	
a12(E)	4	#5	34'-7"	
a13(E)	4	#5	41'-4"	
b1(E)	104	#6	26'-0"	
b3(E)	300	#5	28'-2"	
b4(E)	306	#5	24'-1"	
d(E)	376	#5	7'-0"	
d1(E)	376	#5	8'-2"	
e4(E)	64	#4	19'-10"	
e5(E)	48	#4	14'-9"	
e6(E)	32	#4	21'-4"	
e7(E)	16	#4	23'-8"	
m12(E)	6	#6	3'-3"	
m14(E)	12	#6	3'-2"	
m15(E)	10	#6	34'-7"	
m16(E)	42	#6	9'-0"	
m17(E)	10	#6	41'-5"	
s10(E)	86	#5	8'-4"	
s11(E)	86	#5	11'-4"	
u(E)	6	#6	6'-8"	
u1(E)	6	#6	6'-9"	
v100(E)	114	#5	3'-1"	
Reinforcement Bars, Epoxy Coated		Lbs.	62,060	
Concrete Superstructure		Cu. Yds.	280.8	

Bars indicated thus 1 x 2-#4 etc. indicates 1 line of bars with 2 lengths per line.

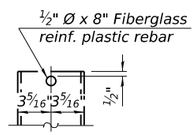

FIBERGLASS PIPE

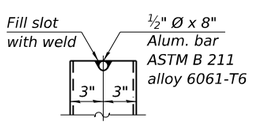

ALUMINUM TUBE

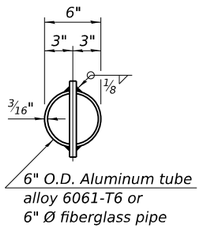

TOP PLAN

(Showing aluminum tube)

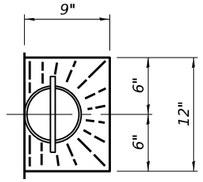

TOP PLAN

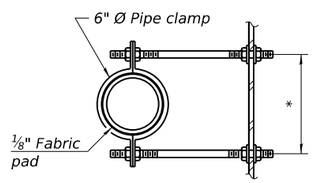

SECTION A-A

*Dimension as required by pipe clamp

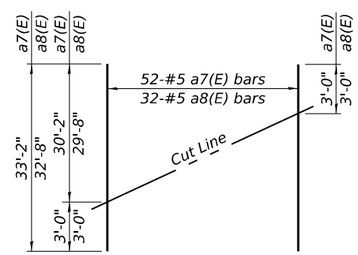

FIELD CUTTING DIAGRAM

Order a7(E) and a8(E) bars full length. Cut as shown and use remainder of bars in opposite end of deck.

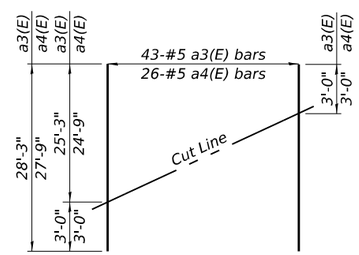

FIELD CUTTING DIAGRAM

Order a3(E) and a4(E) bars full length. Cut as shown and use remainder of bars in opposite end of deck.

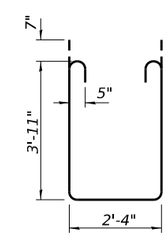

BAR s11(E)

MODEL: $MODELNAMES
FILE NAME: D876E84-016-0018-0019-EB SUPERSTRU DET.dgn

Jacobs
525 West Monroe
Suite 1600
Chicago, IL 60661
(312) 251-3000

USER NAME = jacobspw18lcs11$	DESIGNED - CJF	REVISED -	
	DRAWN - EAK	REVISED -	
PLOT SCALE = 0.16666667 ' / in.	CHECKED - ED	REVISED -	
PLOT DATE = 12/4/2025	DATE - 2025/10/03	REVISED -	

STATE OF ILLINOIS
DEPARTMENT OF TRANSPORTATION

EASTBOUND SUPERSTRUCTURE DETAILS
STRUCTURE NO. 082–0018 (WB) & 082–0019 (EB)

SCALE: NTS | SHEET 15 OF 39 SHEETS | STA. | TO STA.

F.A.I. RTE.	SECTION	COUNTY	TOTAL SHEETS	SHEET NO.
70	Section82-(5,6)RS-2, 60-6RS-2	MADISON & ST. CLAIR	678	386

CONTRACT NO. 76E84

ILLINOIS | FED. AID PROJECT

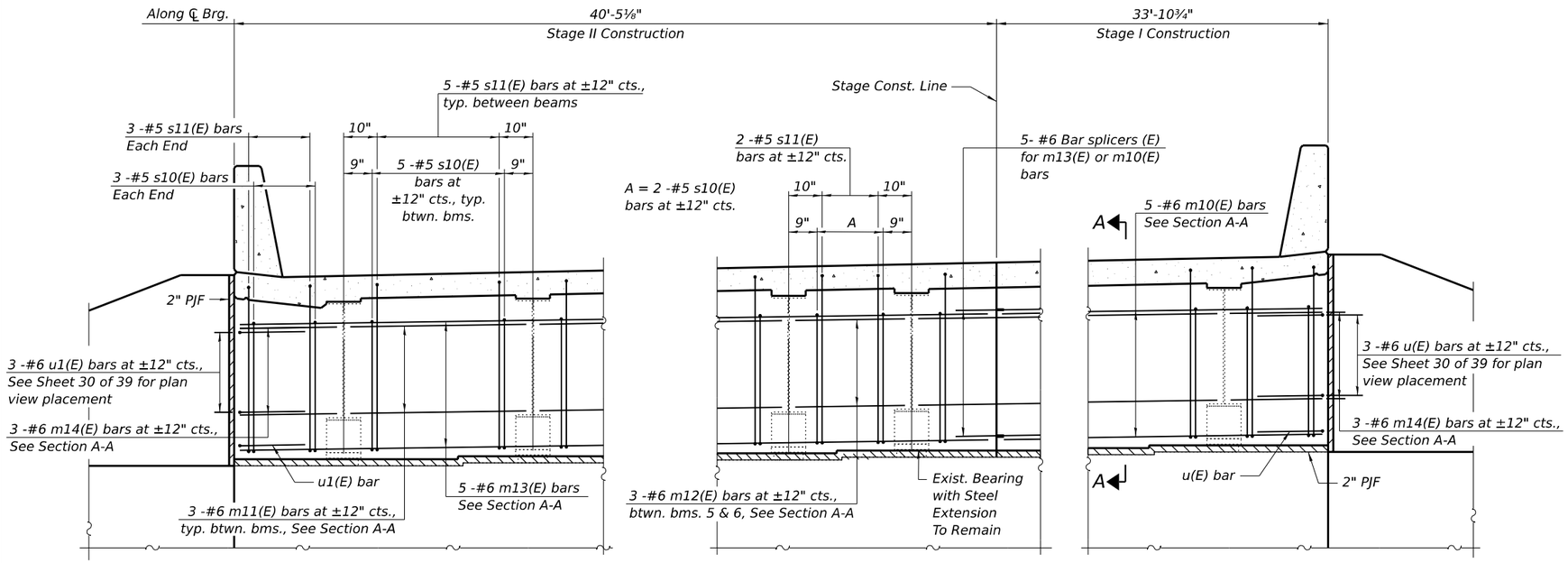

DIAPHRAGM AT SOUTH ABUTMENT

(Looking South)

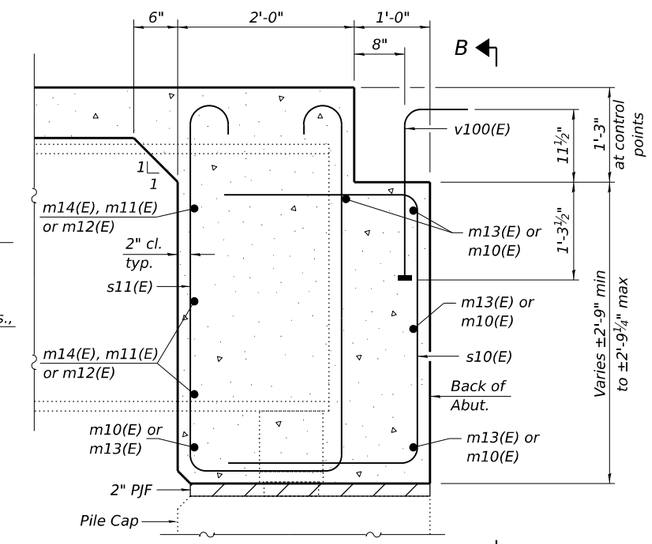

SECTION A-A

(at Rt. ∠'s)

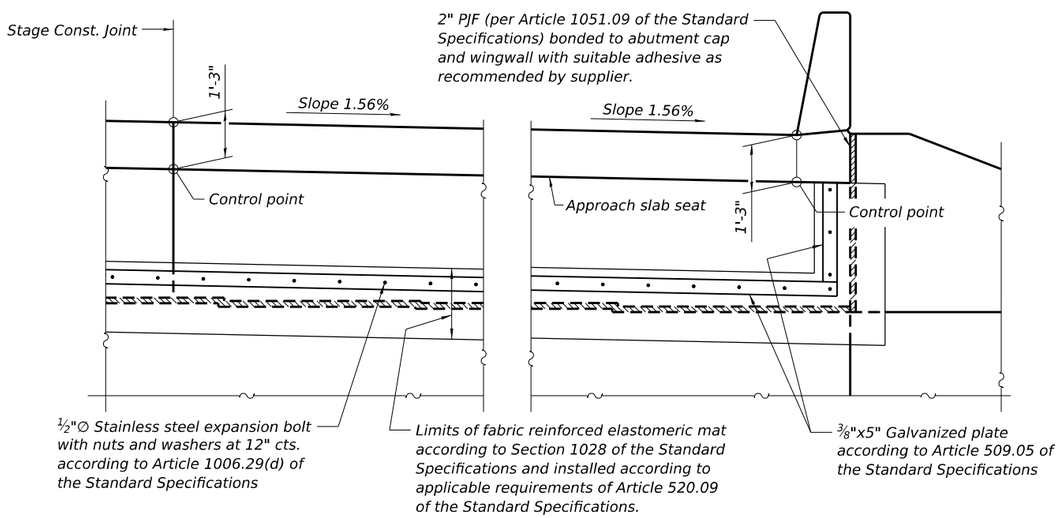

VIEW B-B

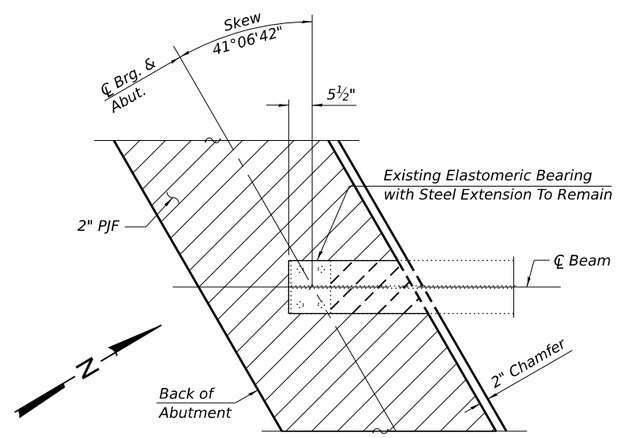

TYPICAL PILE CAP PLAN

(Showing bottom flange of beam, steel extension & PJF)

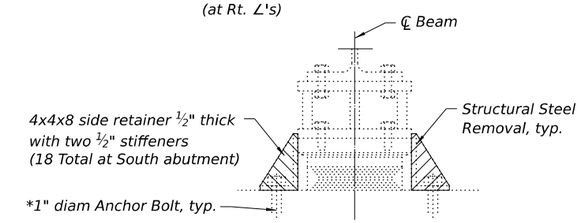

SOUTH ABUT. BEARING DETAIL

Notes:
For additional structural steel removal details and quantities, see sheet 23 of 39.

* The anchor bolts shall be cut flush with the top of abutment cap. Bolts shall be ground smooth and coated with epoxy paint. Cost included with Structural Steel Removal.

BILL OF MATERIAL

ITEM	UNIT	TOTAL
Structural Steel Removal	Pound	190

Notes:
Cost of fabric reinforced elastomeric mat, galvanized plate, stainless steel expansion bolts with nuts and washers and installation are included in the cost of Concrete Superstructure.
All spalls of pile cap corners that may have occurred prior to or during concrete removal shall be repaired by the direction of the engineer prior to placing the 2" PJF on the pile cap.

Notes:
See sheet 13 of 39 for superstructure details and Bill of Material.
The s10(E) and s11(E) bars shall be placed parallel to the beams. Spacing for these bars shall be at right angles to the beams.
The approach slab seat shall have a constant slope determined from the control points shown.

MODEL: $MODELNAMES
FILE NAME: D876E84-017-00018-0019-DIAPH SO WB.dgn

Jacobs
525 West Monroe
Suite 1600
Chicago, IL 60661
(312) 251-3000

USER NAME = jacobspw18lcs09$	DESIGNED - CJF	REVISED -	
	DRAWN - EAK	REVISED -	
PLOT SCALE = 0.16666667 ' / in.	CHECKED - ED	REVISED -	
PLOT DATE = 12/4/2025	DATE - 2025/10/03	REVISED -	

STATE OF ILLINOIS
DEPARTMENT OF TRANSPORTATION

WESTBOUND SOUTH DIAPHRAGM DETAILS
STRUCTURE NO. 082–0018 (WB) & 082–0019 (EB)

SCALE: NTS | SHEET 16 OF 39 SHEETS | STA. | TO STA.

F.A.I. RTE.	SECTION	COUNTY	TOTAL SHEETS	SHEET NO.
70	Section82-(5,6)RS-2, 60-6RS-2	MADISON & ST. CLAIR	678	387

CONTRACT NO. 76E84
ILLINOIS | FED. AID PROJECT

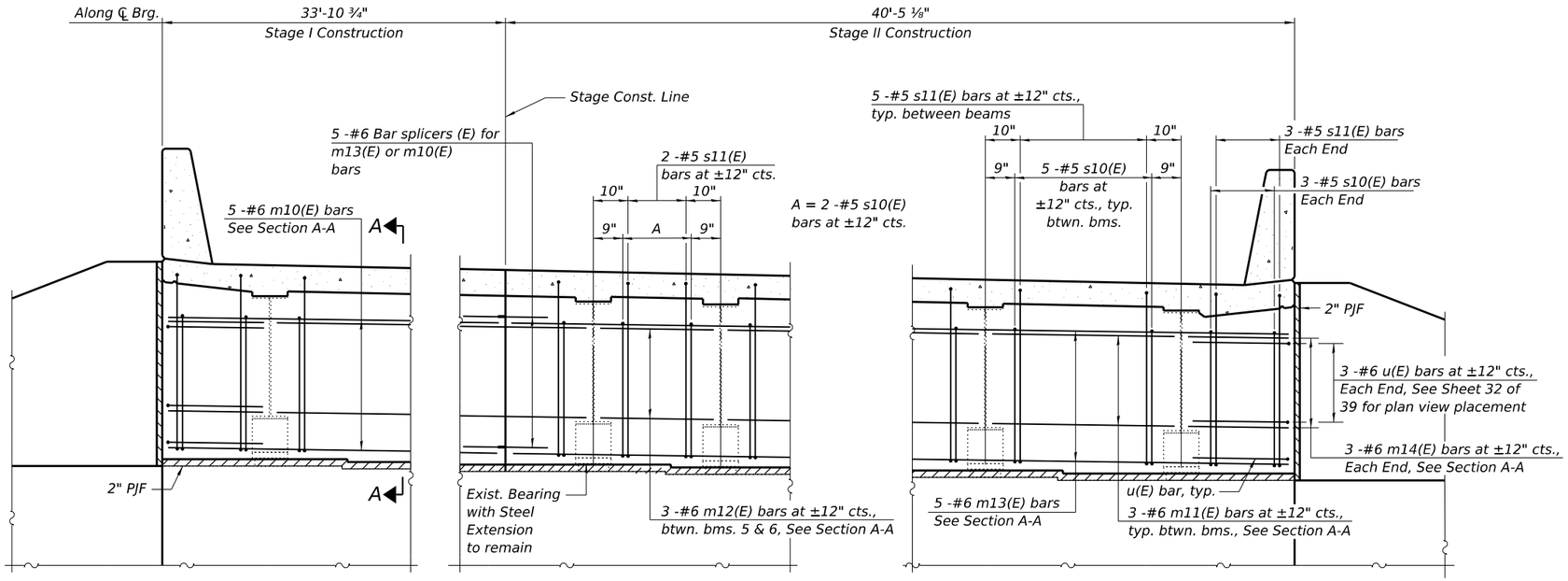

DIAPHRAGM AT NORTH ABUTMENT

(Looking North)

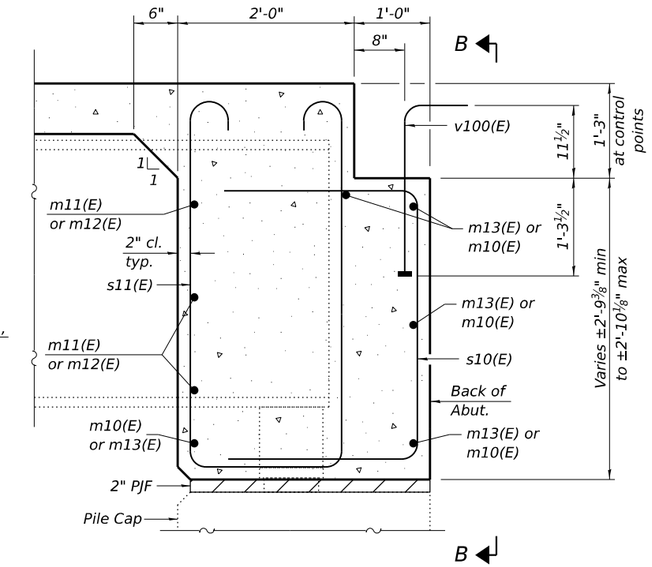

SECTION A-A

(at Rt. ∠'s)

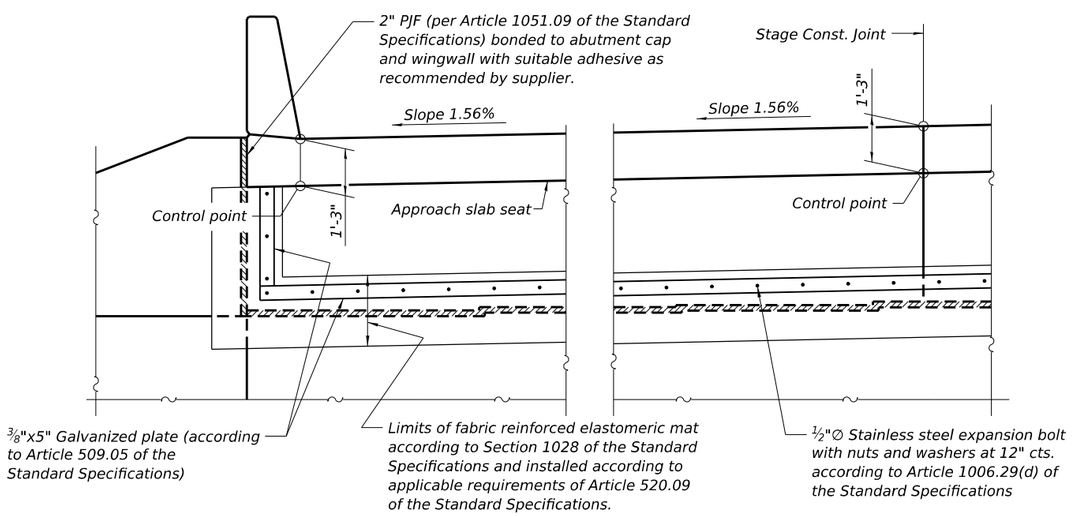

VIEW B-B

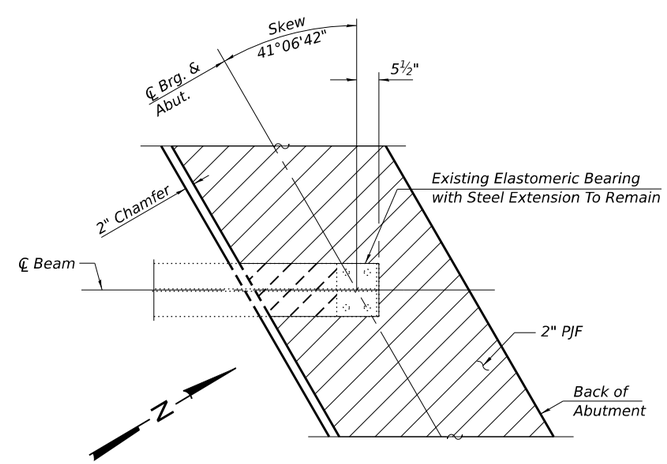

TYPICAL PILE CAP PLAN

(Showing bottom flange of beam, steel extension & PJF)

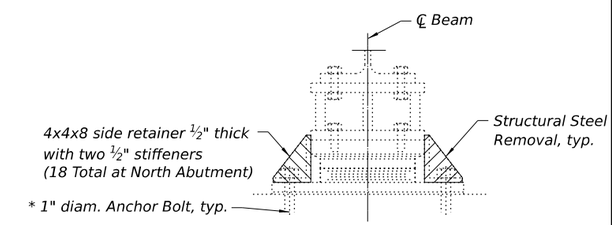

NORTH ABUT. BEARING DETAIL

Note:
For additional structural steel removal details and quantities, see sheet 23 of 39.

* The anchor bolts shall be cut flush with the top of the bottom bearing plate. Bolts shall be ground smooth and coated with epoxy paint. Cost included with Structural Steel Removal.

BILL OF MATERIAL

ITEM	UNIT	TOTAL
Structural Steel Removal	Pound	190

Notes:
Cost of fabric reinforced elastomeric mat, galvanized plate, stainless steel expansion bolts with nuts and washers and installation are included in the cost of Concrete Superstructure.
All spalls of pile cap corners that may have occurred prior to or during concrete removal shall be repaired by the direction of the engineer prior to placing the 2" PJF on the pile cap.

Notes:
See sheet 13 of 39 for superstructure details and Bill of Material.
The s10(E) and s11(E) bars shall be placed parallel to the beams. Spacing for these bars shall be at right angles to the beams.
The approach slab seat shall have a constant slope determined from the control points shown.

MODEL: $MODELNAMES
FILE NAME: D876E84-018-0018-0019-DIAPH NO WB.dgn

Jacobs
525 West Monroe
Suite 1600
Chicago, IL 60661
(312) 251-3000

USER NAME = jacobspw18lcs09$	DESIGNED - CJF	REVISED -	
	DRAWN - EAK	REVISED -	
PLOT SCALE = 0.16666667 ' / in.	CHECKED - ED	REVISED -	
PLOT DATE = 12/4/2025	DATE - 2025/10/03	REVISED -	

STATE OF ILLINOIS
DEPARTMENT OF TRANSPORTATION

WESTBOUND NORTH DIAPHRAGM DETAILS
STRUCTURE NO. 082–0018 (WB) & 082–0019 (EB)

SCALE: NTS | SHEET 17 OF 39 SHEETS | STA. | TO STA.

F.A.I. RTE.	SECTION	COUNTY	TOTAL SHEETS	SHEET NO.
70	Section82-(5,6)RS-2, 60-6RS-2	MADISON & ST. CLAIR	678	388
		CONTRACT NO. 76E84		
		ILLINOIS	FED. AID PROJECT	

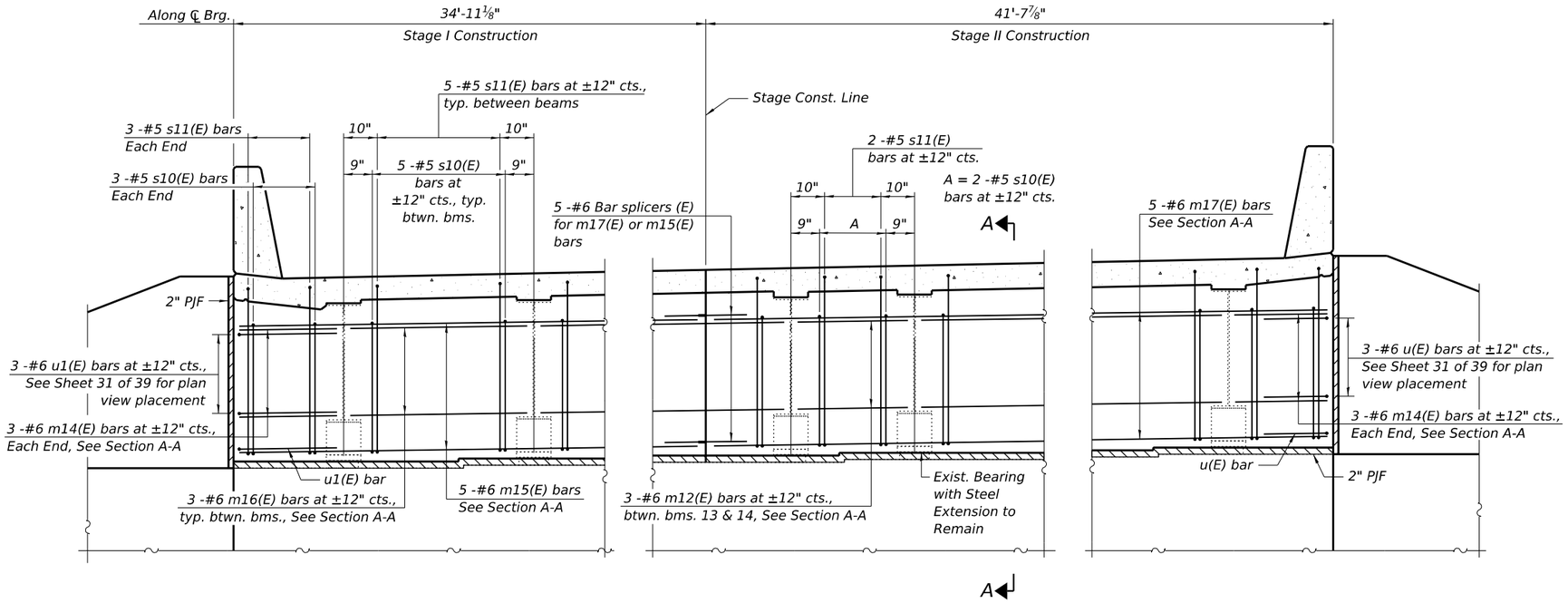

DIAPHRAGM AT SOUTH ABUTMENT

(Looking South)

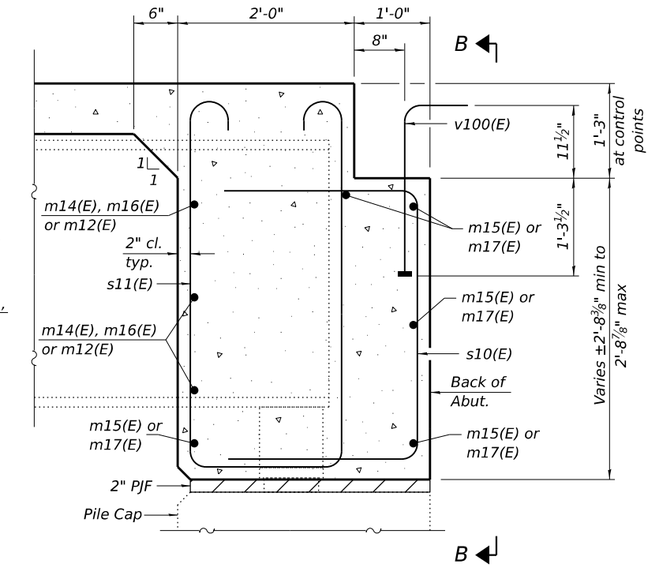

SECTION A-A

(at Rt. ∠'s)

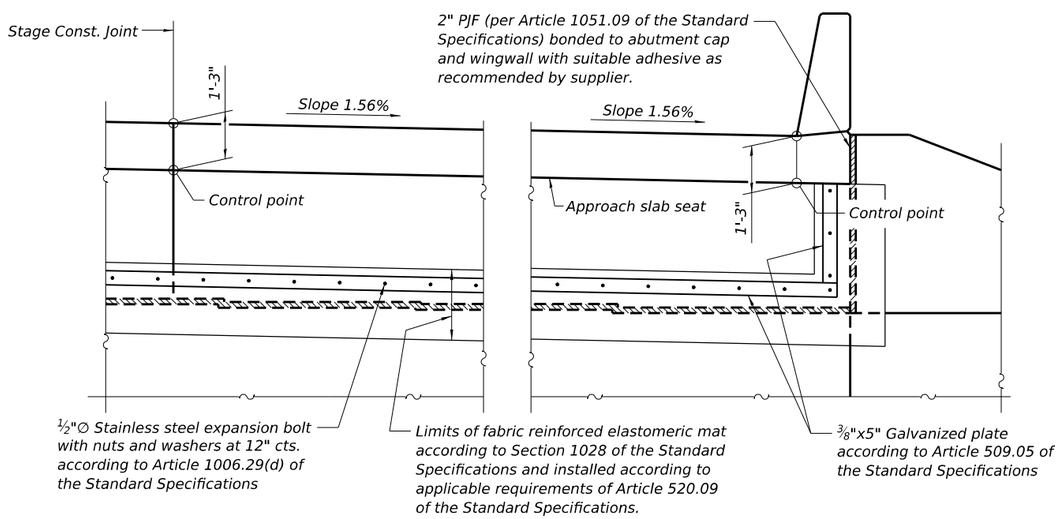

VIEW B-B

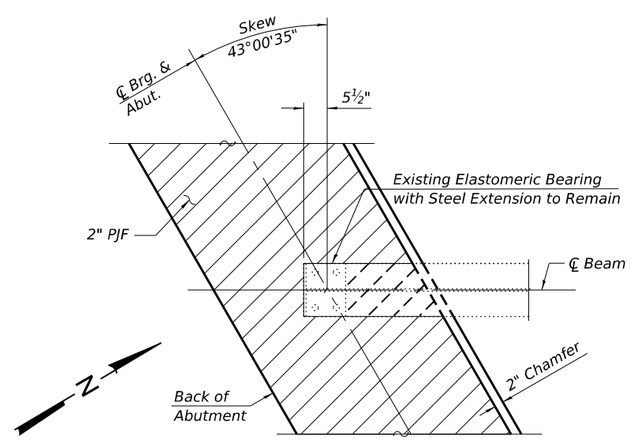

TYPICAL PILE CAP PLAN

(Showing bottom flange of beam, steel extension & PJF)

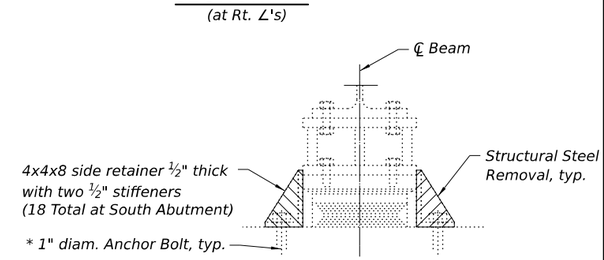

SOUTH ABUT. BEARING DETAIL

Note:
For additional structural steel removal details and quantities, see sheet 24 of 39.

* The anchor bolts shall be cut flush with the top of abutment cap. Bolts shall be ground smooth and coated with epoxy paint. Cost included with Structural Steel Removal.

BILL OF MATERIAL

ITEM	UNIT	TOTAL
Structural Steel Removal	Pound	190

Notes:
Cost of fabric reinforced elastomeric mat, galvanized plate, stainless steel expansion bolts with nuts and washers and installation are included in the cost of Concrete Superstructure.

All spalls of pile cap corners that may have occurred prior to or during concrete removal shall be repaired by the direction of the engineer prior to placing the 2" PJF on the pile cap.

Notes:
See sheet 15 of 39 for superstructure details and Bill of Material.
The s10(E) and s11(E) bars shall be placed parallel to the beams. Spacing for these bars shall be at right angles to the beams.
The approach slab seat shall have a constant slope determined from the control points shown.

MODEL: $MODELNAMES
FILE NAME: D876E84-D19-0018-0019-DIAPH-SO EB.dgn

Jacobs
525 West Monroe
Suite 1600
Chicago, IL 60661
(312) 251-3000

USER NAME = jacobspw18lcs09$	DESIGNED - CJF	REVISED -	
	DRAWN - EAK	REVISED -	
PLOT SCALE = 0.16666667 ' / in.	CHECKED - ED	REVISED -	
PLOT DATE = 12/4/2025	DATE - 2025/10/03	REVISED -	

STATE OF ILLINOIS
DEPARTMENT OF TRANSPORTATION

EASTBOUND SOUTH DIAPHRAGM DETAILS
STRUCTURE NO. 082–0018 (WB) & 082–0019 (EB)

SCALE: NTS | SHEET 18 OF 39 SHEETS | STA. TO STA.

F.A.I. RTE.	SECTION	COUNTY	TOTAL SHEETS	SHEET NO.
70	Section82-(5,6)RS-2, 60-6RS-2	MADISON & ST. CLAIR	678	389
		CONTRACT NO. 76E84		
		ILLINOIS	FED. AID PROJECT	

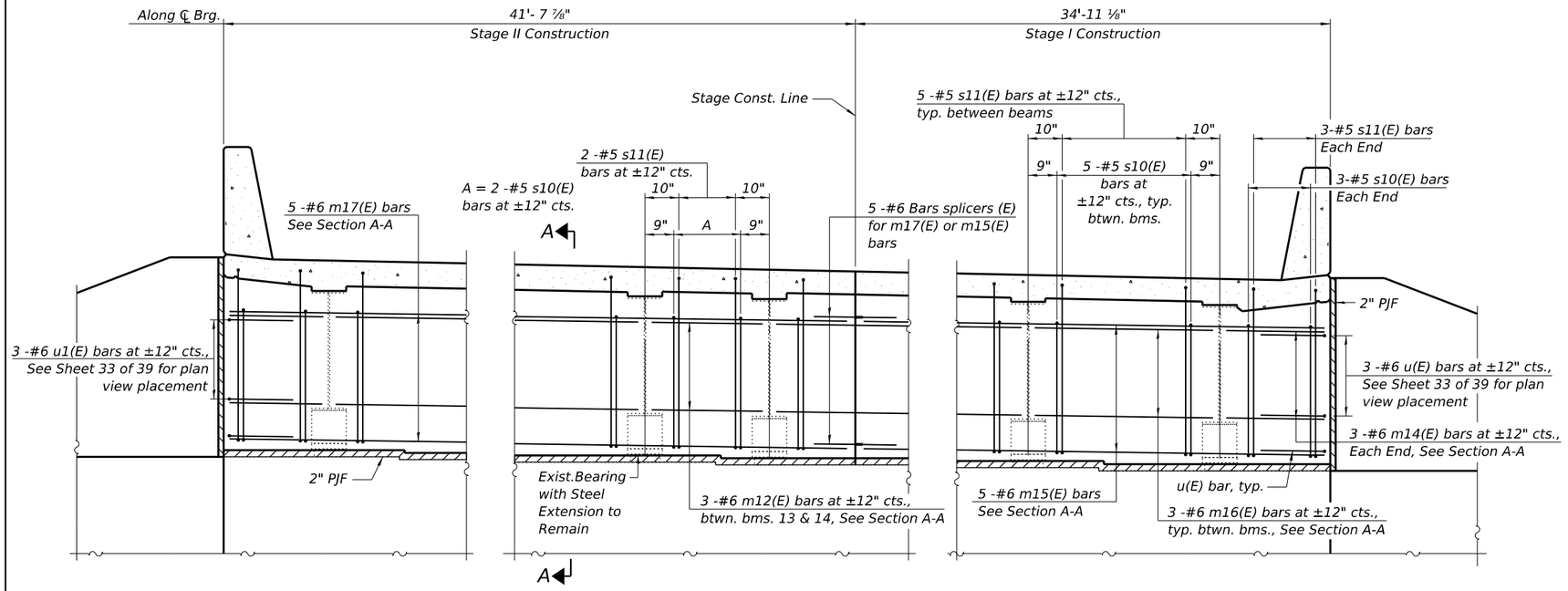

DIAPHRAGM AT NORTH ABUTMENT

(Looking North)

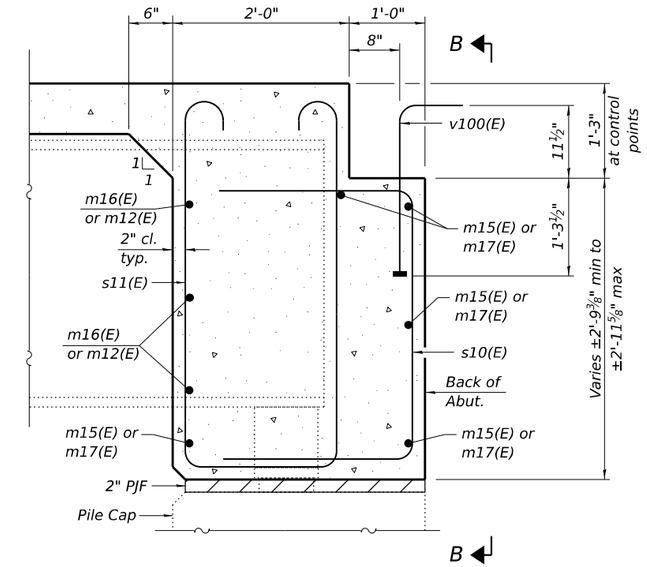

SECTION A-A

(at Rt. ∠'s)

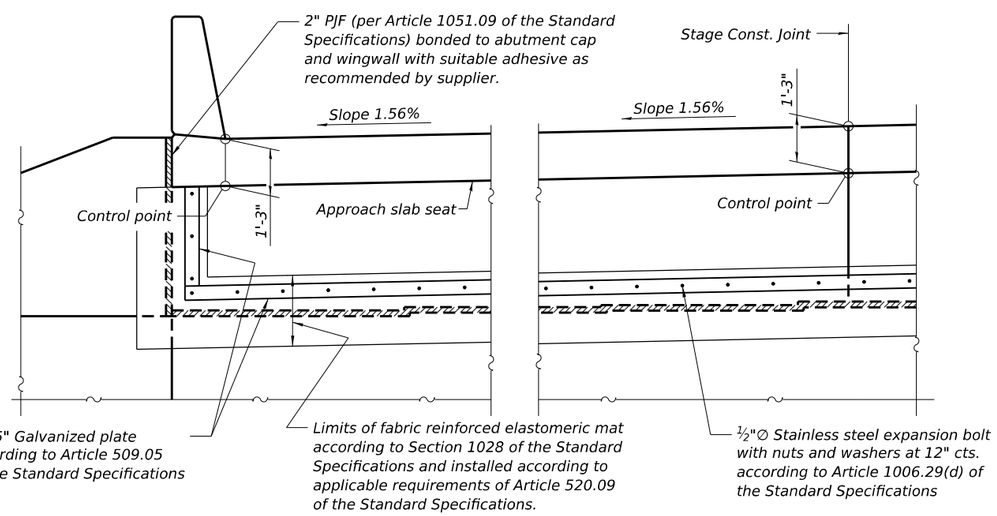

VIEW B-B

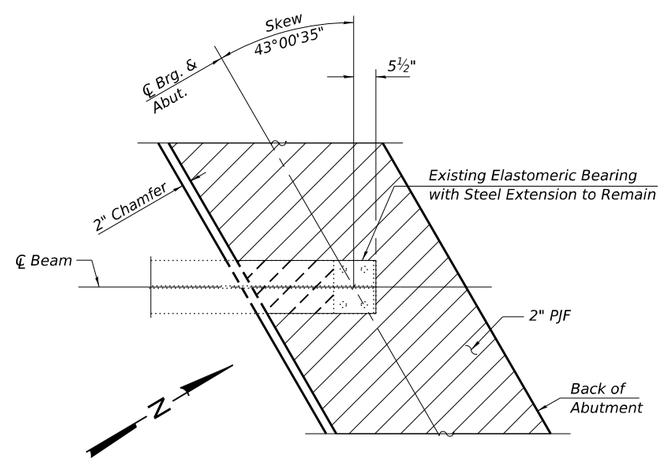

TYPICAL PILE CAP PLAN

(Showing bottom flange of beam, steel extension & PJF)

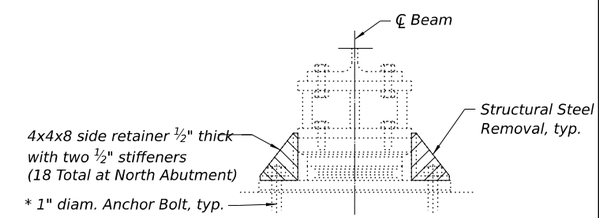

NORTH ABUT. BEARING DETAIL

Note:
For additional structural steel removal details and quantities, see sheet 24 of 39.

* The anchor bolts shall be cut flush with top of the bottom bearing plate. Bolts shall be ground smooth and coated with epoxy paint. Cost included with Structural Steel Removal.

BILL OF MATERIAL

ITEM	UNIT	TOTAL
Structural Steel Removal	Pound	190

Notes:
Cost of fabric reinforced elastomeric mat, galvanized plate, stainless steel expansion bolts with nuts and washers and installation are included in the cost of Concrete Superstructure.
All spalls of pile cap corners that may have occurred prior to or during concrete removal shall be repaired by the direction of the engineer prior to placing the 2" PJF on the pile cap.

Notes:
See sheet 15 of 39 for superstructure details and Bill of Material.
The s10(E) and s11(E) bars shall be placed parallel to the beams. Spacing for these bars shall be at right angles to the beams.
The approach slab seat shall have a constant slope determined from the control points shown.

MODEL: $MODELNAMES
FILE NAME: D876E84-020-0018-0019-DIAPH NO EB.dgn

Jacobs
525 West Monroe
Suite 1600
Chicago, IL 60661
(312) 251-3000

USER NAME = jacobspw18lcs09$	DESIGNED - CJF	REVISED -	
	DRAWN - EAK	REVISED -	
PLOT SCALE = 0.16666667 ' / in.	CHECKED - ED	REVISED -	
PLOT DATE = 12/4/2025	DATE - 2025/10/03	REVISED -	

STATE OF ILLINOIS
DEPARTMENT OF TRANSPORTATION

EASTBOUND NORTH DIAPHRAGM DETAILS
STRUCTURE NO. 082–0018 (WB) & 082–0019 (EB)

SCALE: NTS | SHEET 19 OF 39 SHEETS | STA. TO STA.

F.A.I. RTE.	SECTION	COUNTY	TOTAL SHEETS	SHEET NO.
70	Section82-(5,6)RS-2, 60-6RS-2	MADISON & ST. CLAIR	678	390

CONTRACT NO. 76E84

ILLINOIS FED. AID PROJECT

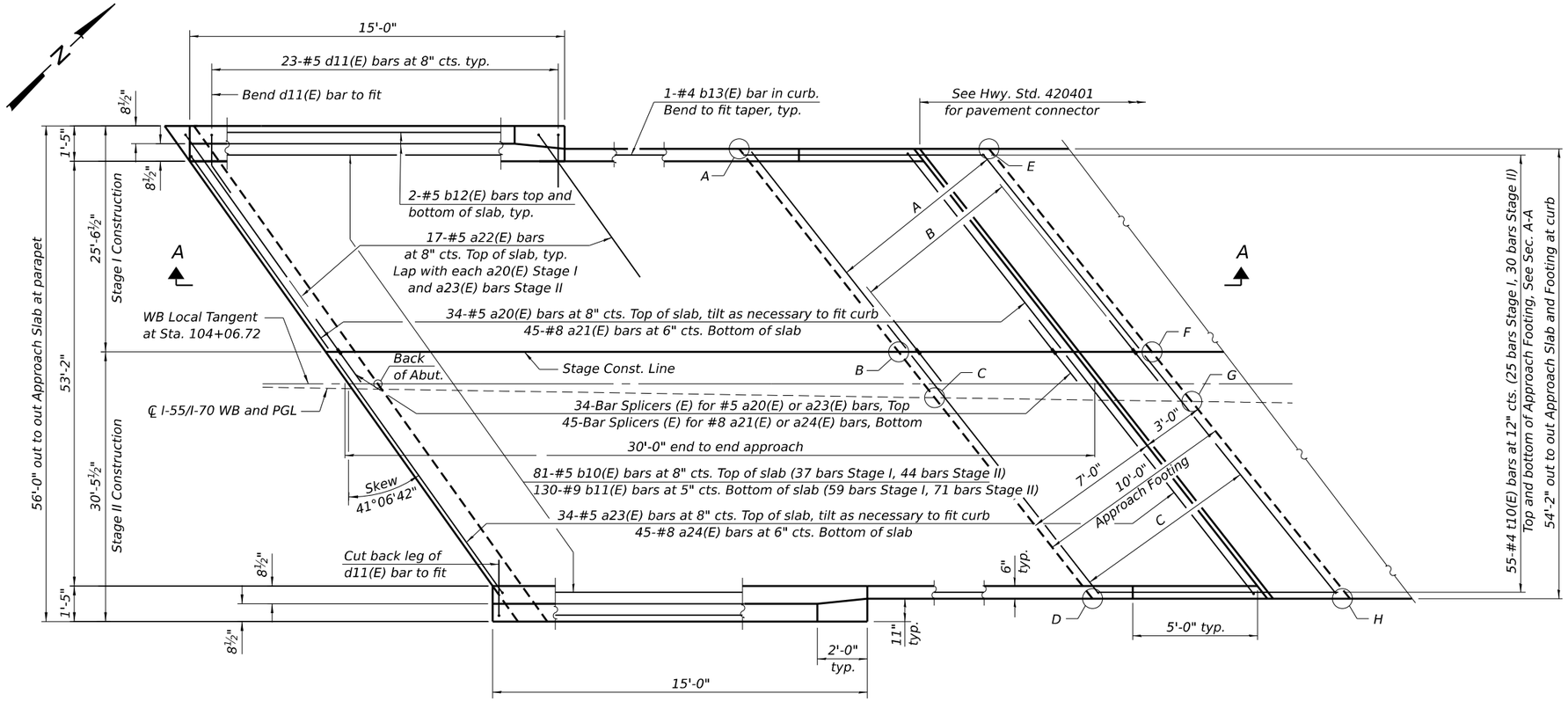

A = 20-#5 w10(E) bars at 6" cts.
Top and bottom of Approach Footing. See Sec A-A
B = 20-Bar Splicers (E) for #5 w10(E) or w11(E) bars,
Top and bottom
C = 20-#5 w11(E) bars at 6" cts.
Top and bottom of Approach Footing. See Sec A-A

Note:
For section A-A see Sheet 22 of 39

PLAN

(N. approach slab shown; S. approach slab similar)

TOP AND BOTTOM ELEVATIONS FOR APPROACH FOOTING

South Approach			North Approach		
Point/ Location	Top	Bottom	Point/ Location	Top	Bottom
A	413.98	413.14	A	414.05	413.22
B	413.62	412.79	B	413.66	412.82
C	413.53	412.70	C	413.57	412.74
D	413.18	412.35	D	413.18	412.34
E	413.96	413.12	E	414.05	413.21
F	413.60	412.77	F	413.65	412.81
G	413.52	412.68	G	413.56	412.72
H	413.17	412.34	H	413.16	412.33

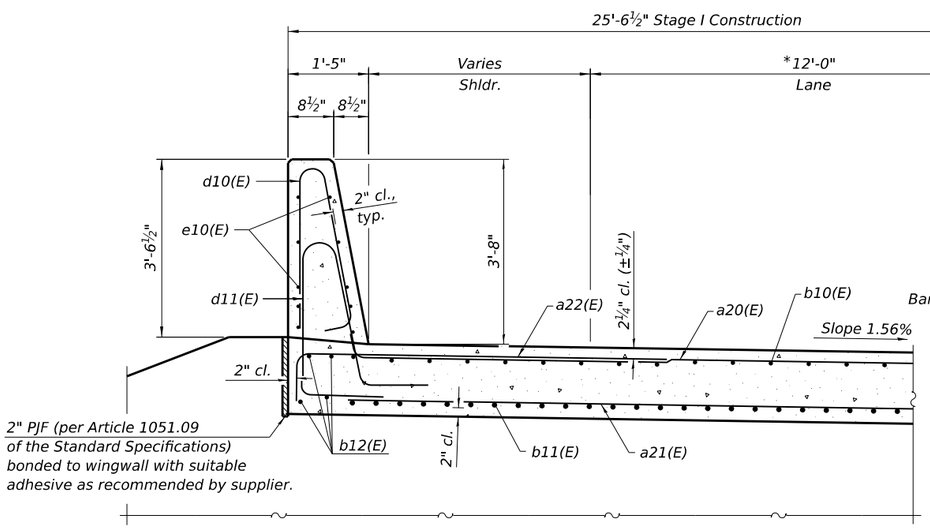

NEAR ABUTMENT

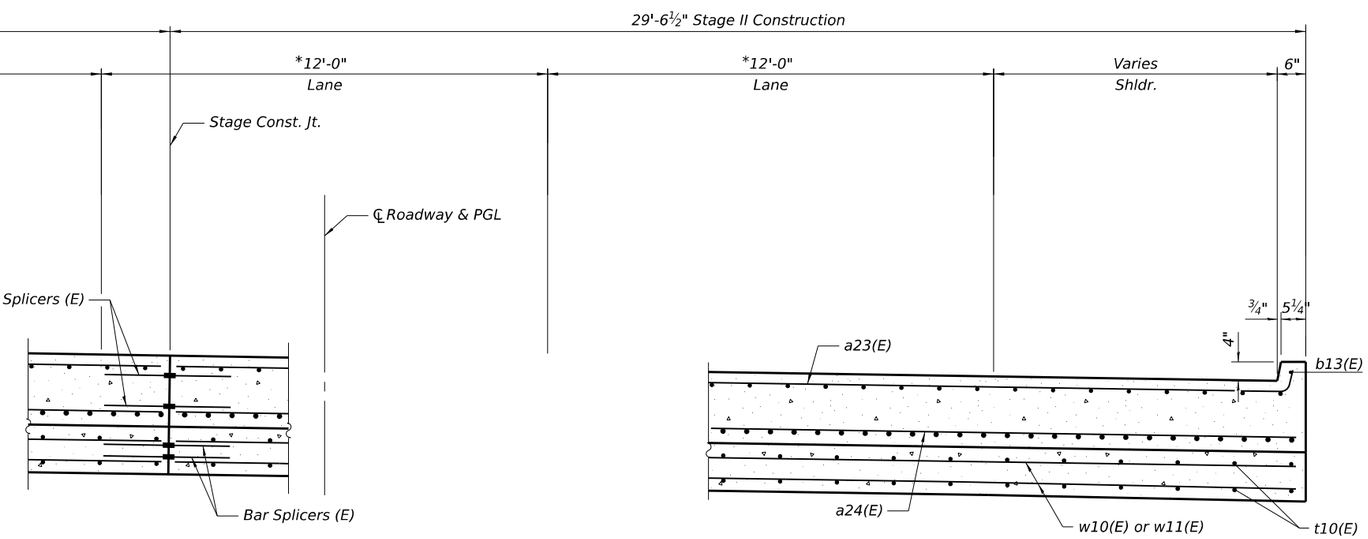

CROSS SECTION

(Looking North)

AT APPROACH FOOTING

* Indicates dimension is radial to ℄

MODEL: $MODELNAME$
FILE NAME: D876E84-021-0018-0019-APP SLAB LAYOUT WB.dgn

Jacobs
525 West Monroe
Suite 1600
Chicago, IL 60661
(312) 251-3000

USER NAME = jacobspw18ics09$	DESIGNED - CJF	REVISED -	
	DRAWN - EAK	REVISED -	
PLOT SCALE = 0.16666667 ' / in.	CHECKED - ED	REVISED -	
PLOT DATE = 12/4/2025	DATE - 2025/10/03	REVISED -	

STATE OF ILLINOIS
DEPARTMENT OF TRANSPORTATION

WESTBOUND BRIDGE APPROACH SLAB DETAILS
STRUCTURE NO. 082-0018 (WB) & 082-0019 (EB)

SCALE: NTS | SHEET 20 OF 39 SHEETS | STA. | TO STA.

F.A.I. RTE.	SECTION	COUNTY	TOTAL SHEETS	SHEET NO.
70	Section82-(5,6)RS-2, 60-6RS-2	MADISON & ST. CLAIR	678	391
		CONTRACT NO. 76E84		
		ILLINOIS	FED. AID PROJECT	

A = 20-#5 w12(E) bars at 6" cts.
Top and bottom of Approach Footing. See Sec A-A
B = 20-Bar Splicers (E) for #5 w12(E) or w13(E) bars
Top and bottom
C = 20-#5 w13(E) bars at 6" cts.
Top and bottom of Approach Footing. See Sec A-A

Note:
For Sec A-A see sheet 22 of 39

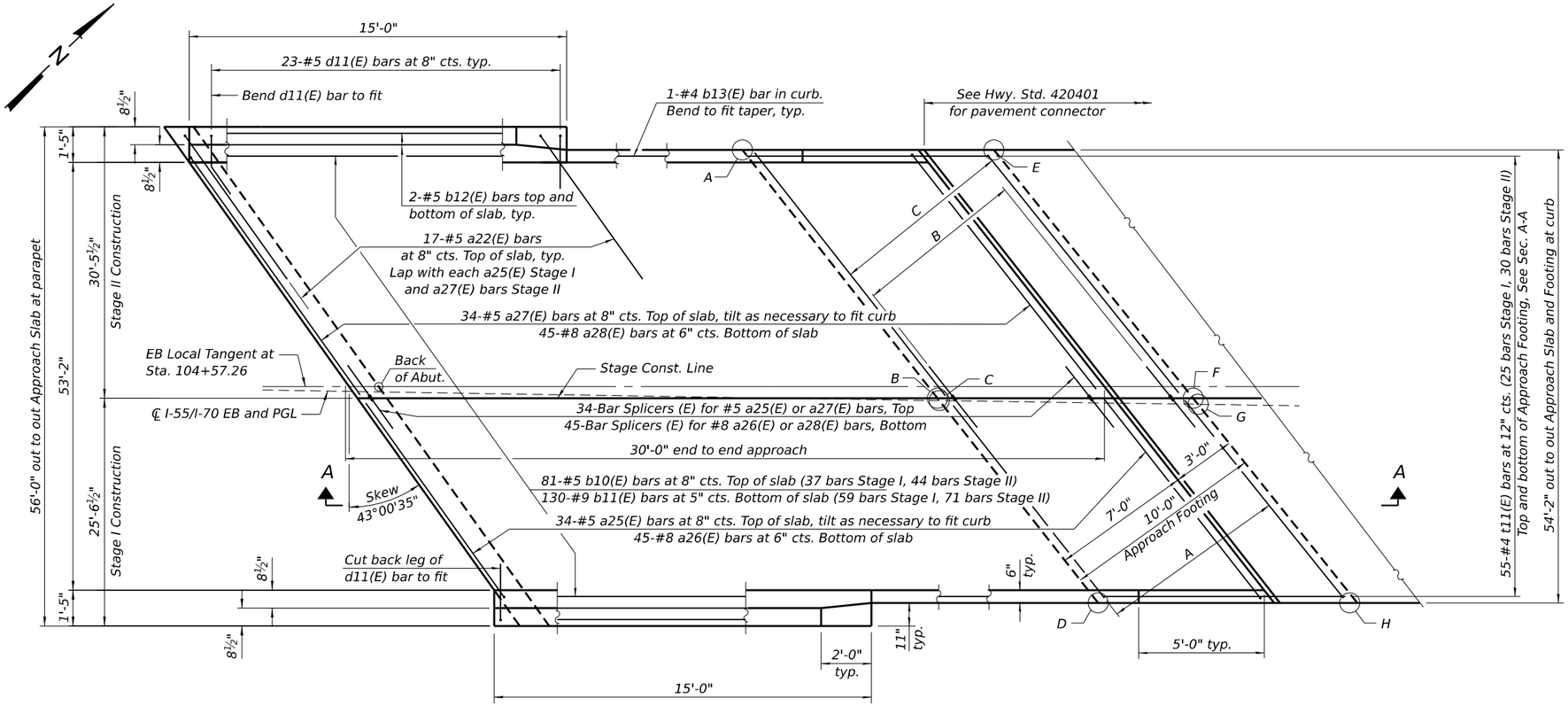

PLAN

(N. approach slab shown; S. approach slab similar)

TOP AND BOTTOM ELEVATIONS FOR APPROACH FOOTING

South Approach			North Approach		
Point/ Location	Top	Bottom	Point/ Location	Top	Bottom
A	413.42	412.59	A	413.35	412.52
B	413.04	412.21	B	412.94	412.11
C	413.97	412.13	C	412.85	412.02
D	412.58	411.75	D	412.43	411.60
E	413.41	412.58	E	413.33	412.50
F	413.04	412.20	F	412.92	412.08
G	412.96	412.13	G	412.83	411.99
H	412.58	411.75	H	412.40	411.57

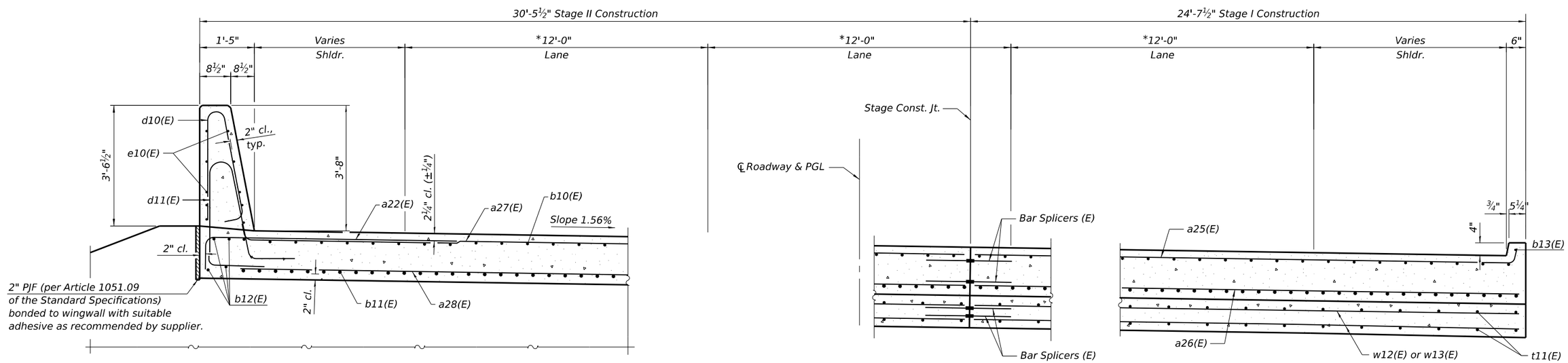

* Indicates dimension is radial to ℄

MODEL: $MODELNAME$
FILE NAME: D876E84-022-4018-0019-APP SLAB LAYOUT EB.dgn

Jacobs
525 West Monroe
Suite 1600
Chicago, IL 60661
(312) 251-3000

USER NAME = jacobspw18ics11$	DESIGNED - CJF	REVISED -	
	DRAWN - EAK	REVISED -	
PLOT SCALE = 0.16666667 ' / in.	CHECKED - ED	REVISED -	
PLOT DATE = 12/4/2025	DATE - 2025/10/03	REVISED -	

STATE OF ILLINOIS
DEPARTMENT OF TRANSPORTATION

EASTBOUND BRIDGE APPROACH SLAB DETAILS
STRUCTURE NO. 082-0018 (WB) & 082-0019 (EB)

SCALE: NTS | SHEET 21 OF 39 SHEETS | STA. | TO STA.

F.A.I. RTE.	SECTION	COUNTY	TOTAL SHEETS	SHEET NO.
70	Section82-(5,6)RS-2, 60-6RS-2	MADISON & ST. CLAIR	678	392

CONTRACT NO. 76E84
ILLINOIS | FED. AID PROJECT

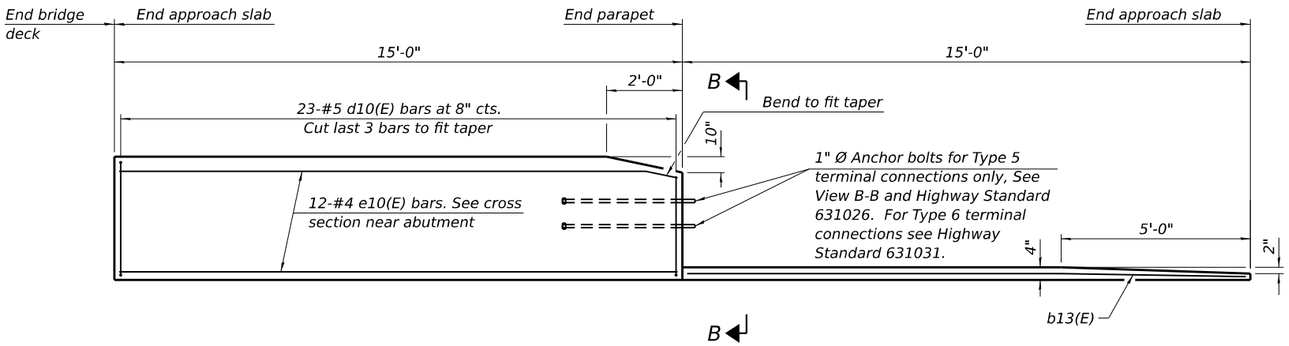

INSIDE ELEVATION OF PARAPET AND CURB

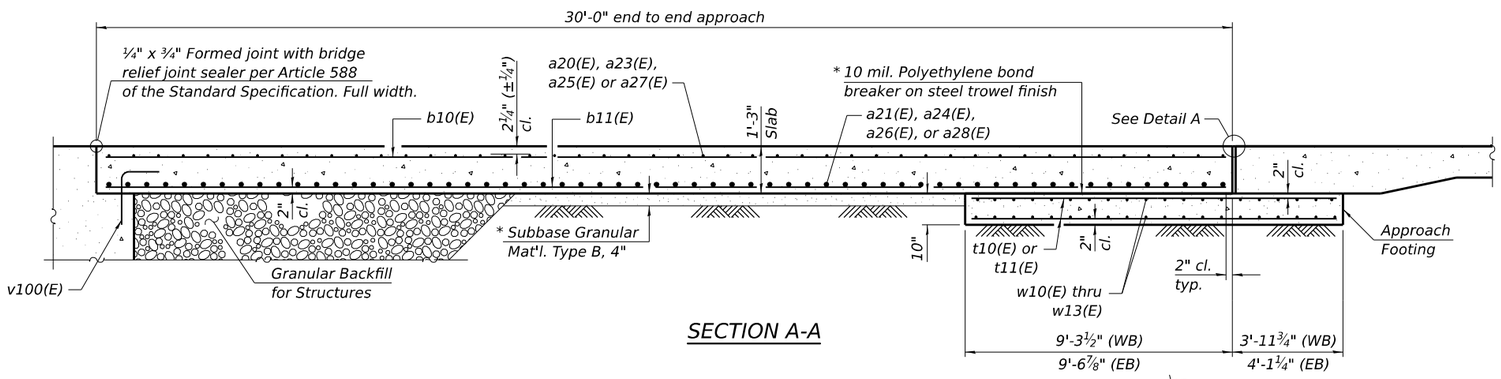

SECTION A-A

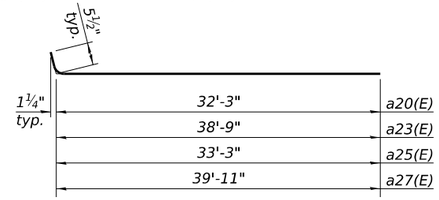

BAR a20(E), a23(E), a25(E) & a27(E)

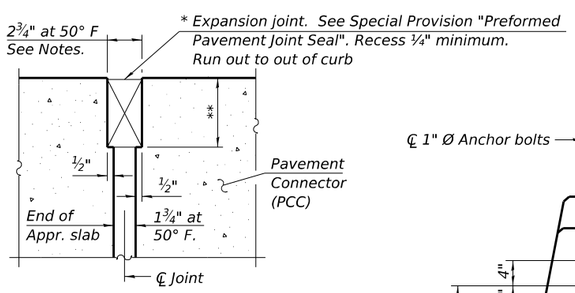

DETAIL A

(at Rt. ∠'s)

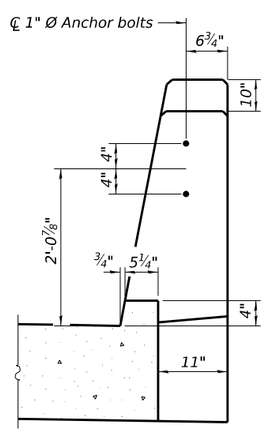

VIEW B-B

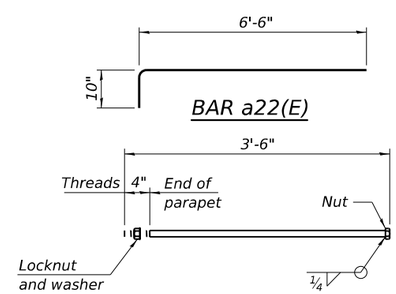

BAR a22(E)

* 1" Ø ANCHOR BOLT

(Anchor bolt assemblies shall be galvanized according to Article 1006.09 of the Standard Specifications)

* Cost included with Concrete Superstructure (Approach Slab).

** Per manufacturer recommendations

Notes:

The joint opening shall be adjusted for temperature per Article 520.04 of the Standard Specifications. However, since this detail is for jointless structures, the length of bridge used to calculate the adjustment shall be equal to half the total bridge length plus the length of the bridge approach slab.

Parapet concrete shall be paid for as Concrete Superstructure.

Approach slab shall be paid for as Concrete Superstructure (Approach Slab).

Approach footing concrete shall be paid for as Concrete Structures.

The approach footing maximum applied service bearing pressure (Qmax) = 2.0 ksf.

Cost of excavation for approach footing included with Concrete Structures.

For Granular Backfill for Structures and drainage treatment details, see sheet 3 of 39.

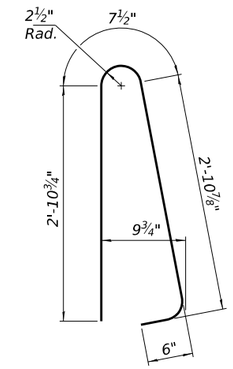

BAR d10(E)

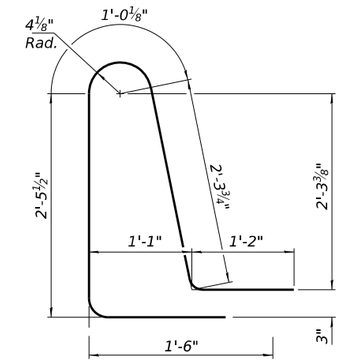

BAR d11(E)

TWO APPROACHES BILL OF MATERIAL (WB)

Bar	No.	Size	Length	Shape
a20(E)	68	#5	32'-9"	
a21(E)	90	#8	32'-3"	
a22(E)	68	#5	7'-4"	
a23(E)	68	#5	39'-3"	
a24(E)	90	#8	38'-9"	
b10(E)	162	#5	29'-8"	
b11(E)	260	#9	29'-8"	
b12(E)	16	#5	14'-8"	
b13(E)	4	#4	14'-8"	
d10(E)	92	#5	7'-0"	
d11(E)	92	#5	8'-6"	
e10(E)	48	#4	14'-8"	
t10(E)	220	#4	12'-11"	
w10(E)	80	#5	32'-3"	
w11(E)	80	#5	38'-10"	
Concrete Superstructure			Cu. Yd.	8.4
Concrete Superstructure (Approach Slab)			Cu. Yd.	153.4
Concrete Structures			Cu. Yd.	44.4
Reinforcement Bars, Epoxy Coated			Pound	64,000

TWO APPROACHES BILL OF MATERIAL (EB)

Bar	No.	Size	Length	Shape
a22(E)	68	#5	7'-4"	
a25(E)	68	#5	33'-9"	
a26(E)	90	#8	33'-3"	
a27(E)	68	#5	40'-5"	
a28(E)	90	#8	39'-11"	
b10(E)	162	#5	29'-8"	
b11(E)	260	#9	29'-8"	
b12(E)	16	#5	14'-8"	
b13(E)	4	#4	14'-8"	
d10(E)	92	#5	7'-0"	
d11(E)	92	#5	8'-6"	
e10(E)	48	#4	14'-8"	
t11(E)	220	#4	13'-6"	
w12(E)	80	#5	33'-3"	
w13(E)	80	#5	40'-0"	
Concrete Superstructure			Cu. Yd.	8.4
Concrete Superstructure (Approach Slab)			Cu. Yd.	153.4
Concrete Structures			Cu. Yd.	45.7
Reinforcement Bars, Epoxy Coated			Pound	64,940

MODEL: $MODELNAMES
FILE NAME: D876E84-023-00018-00019-APP SLAB DET.dgn

Jacobs
525 West Monroe
Suite 1600
Chicago, IL 60661
(312) 251-3000

USER NAME = jacobspw18lcs09$	DESIGNED - CJF	REVISED -	
	DRAWN - EAK	REVISED -	
PLOT SCALE = 0.16666667 ' / in.	CHECKED - ED	REVISED -	
PLOT DATE = 12/4/2025	DATE - 2025/10/03	REVISED -	

STATE OF ILLINOIS
DEPARTMENT OF TRANSPORTATION

BRIDGE APPROACH SLAB DETAILS
STRUCTURE NO. 082–0018 (WB) & 082–0019 (EB)

SCALE: NTS | SHEET 22 OF 39 SHEETS | STA. | TO STA.

F.A.I. RTE.	SECTION	COUNTY	TOTAL SHEETS	SHEET NO.
70	Section82-(5,6)RS-2, 60-6RS-2	MADISON & ST. CLAIR	678	393
		CONTRACT NO. 76E84		
		ILLINOIS	FED. AID PROJECT	

BILL OF MATERIAL

ITEM	UNIT	TOTAL
Stud Shear Connectors	Each	6,264
Structural Steel Removal	Pound	5,380

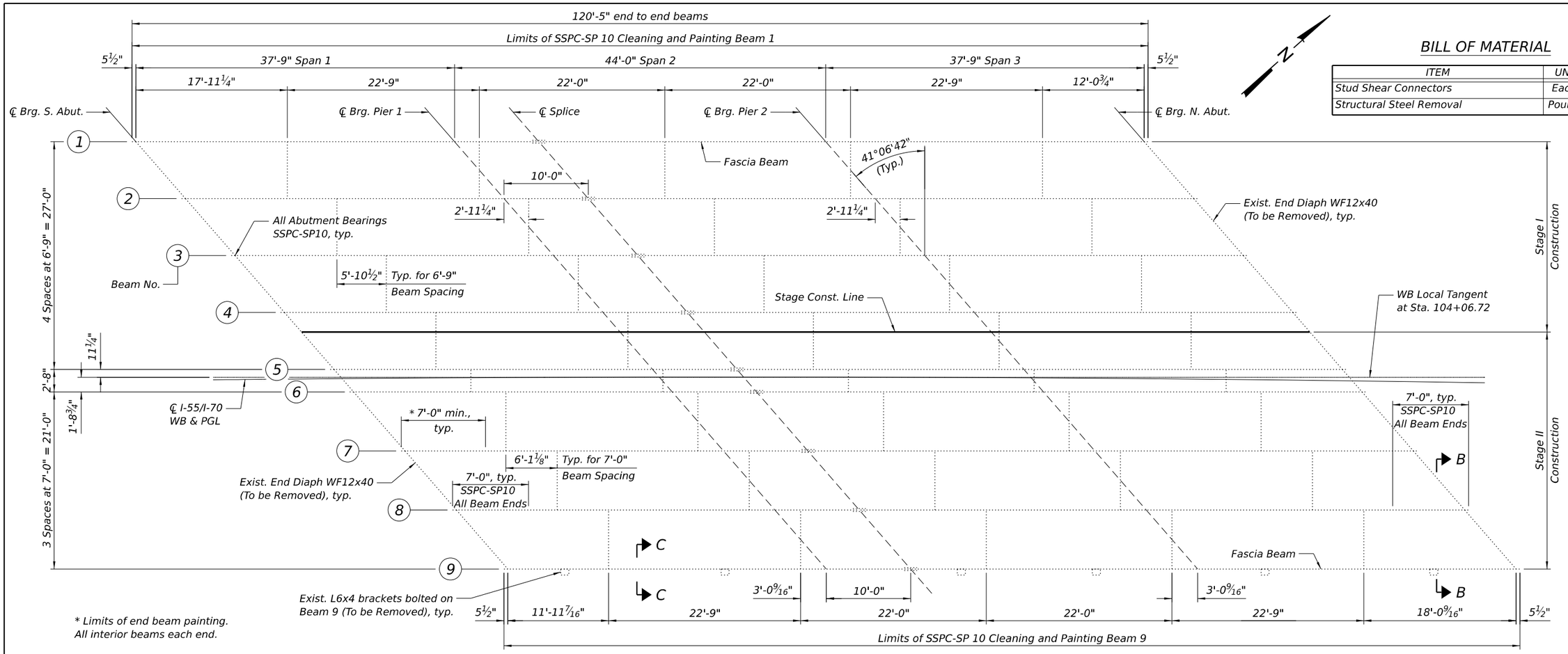

* Limits of end beam painting.
All interior beams each end.

FRAMING PLAN

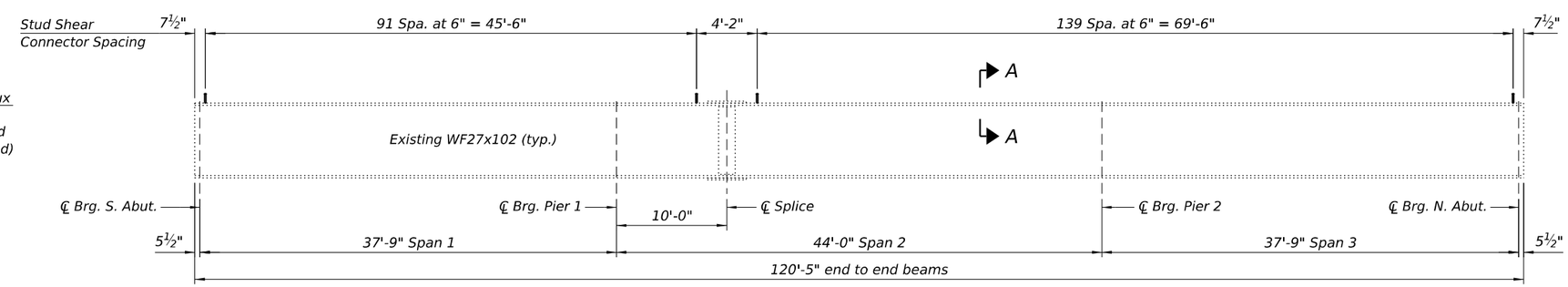

BEAM ELEVATION

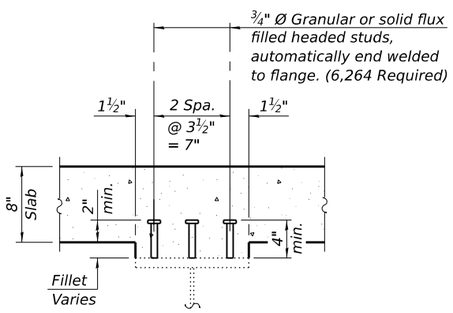

SECTION A-A

Note:
For Sections B-B & C-C, see Sheet 25 of 39.

MODEL: $MODELNAMES
FILE NAME: D876E84-024-0018-0019-WB STRUCT STEEL.dgn

Jacobs
525 West Monroe
Suite 1600
Chicago, IL 60661
(312) 251-3000

USER NAME = jacobspw18ics09$	DESIGNED - CJF	REVISED -	
	DRAWN - EAK	REVISED -	
PLOT SCALE = 0.16666667 ' / in.	CHECKED - ED	REVISED -	
PLOT DATE = 12/4/2025	DATE - 2025/10/03	REVISED -	

STATE OF ILLINOIS
DEPARTMENT OF TRANSPORTATION

WESTBOUND STRUCTURAL STEEL
STRUCTURE NO. 082–0018 (WB) & 082–0019 (EB)

SCALE: NTS | SHEET 23 OF 39 SHEETS | STA. | TO STA.

F.A.I. RTE.	SECTION	COUNTY	TOTAL SHEETS	SHEET NO.
70	Section82-(5,6)RS-2, 60-6RS-2	MADISON & ST. CLAIR	678	394

CONTRACT NO. 76E84
ILLINOIS | FED. AID PROJECT

BILL OF MATERIAL

ITEM	UNIT	TOTAL
Stud Shear Connectors	Each	6,480
Structural Steel Removal	Pound	5,540

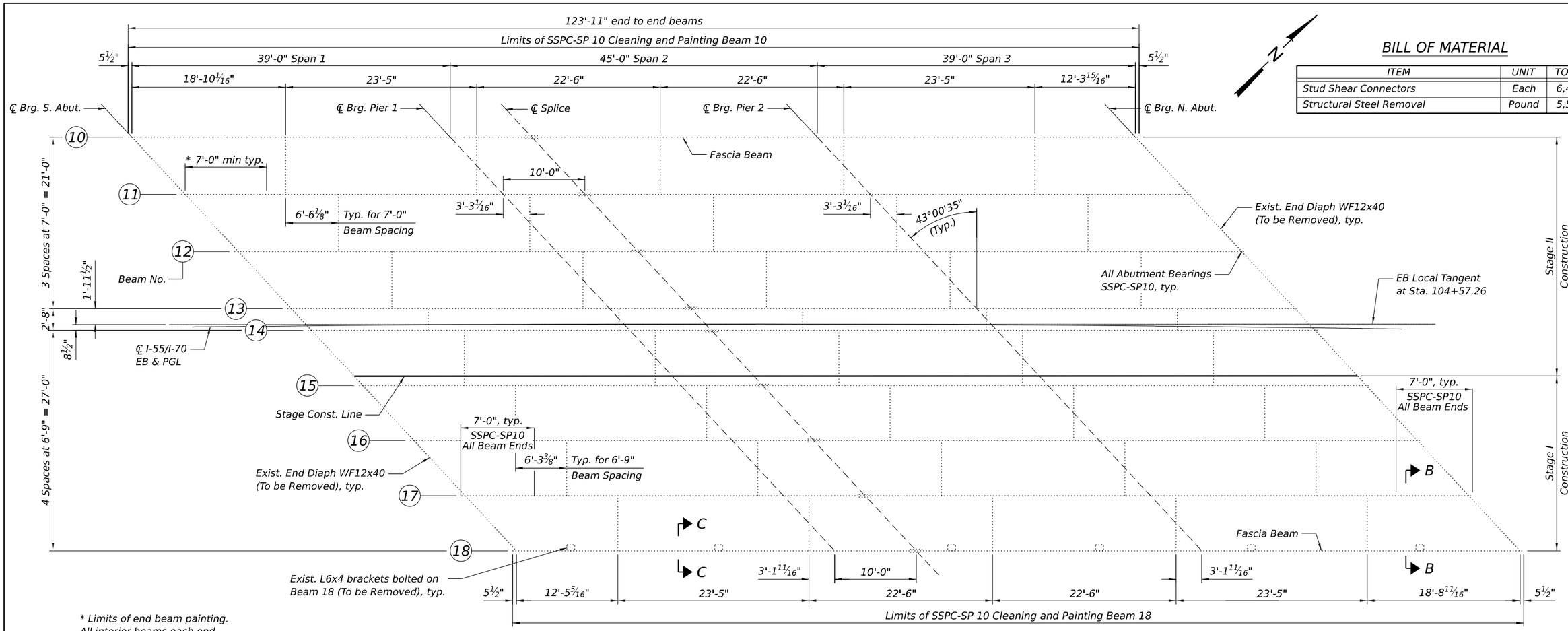

* Limits of end beam painting.
All interior beams each end.

FRAMING PLAN

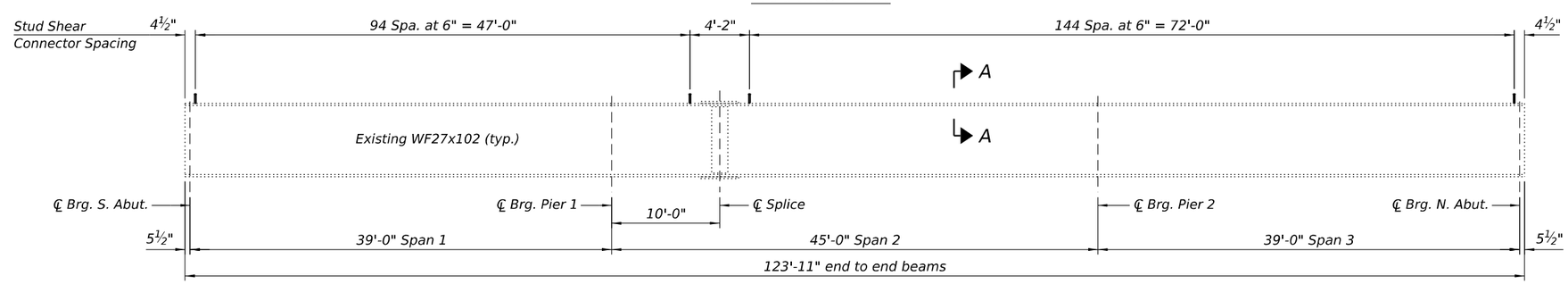

BEAM ELEVATION

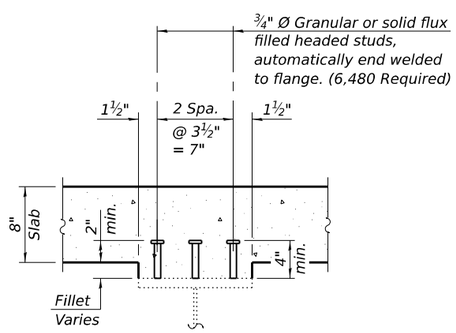

SECTION A-A

Note:
For Sections B-B & C-C see Sheet 25 of 39.

MODEL: $MODELNAMES
FILE NAME: D876E84-025-0018-0019-EB STRUCT STEEL.dgn

Jacobs
525 West Monroe
Suite 1600
Chicago, IL 60661
(312) 251-3000

USER NAME = jacobspw18cs10$	DESIGNED - CJF	REVISED -	
	DRAWN - EAK	REVISED -	
PLOT SCALE = 0.16666667 ' / in.	CHECKED - ED	REVISED -	
PLOT DATE = 12/4/2025	DATE - 2025/10/03	REVISED -	

STATE OF ILLINOIS
DEPARTMENT OF TRANSPORTATION

EASTBOUND STRUCTURAL STEEL
STRUCTURE NO. 082–0018 (WB) & 082–0019 (EB)

SCALE: NTS | SHEET 24 OF 39 SHEETS | STA. | TO STA.

F.A.I. RTE.	SECTION	COUNTY	TOTAL SHEETS	SHEET NO.
70	Section82-(5,6)RS-2, 60-6RS-2	MADISON & ST. CLAIR	678	395
		CONTRACT NO. 76E84		
		ILLINOIS	FED. AID PROJECT	

Symmetrical 3 span

INTERIOR BEAM MOMENT TABLE				
		0.4 Sp. 1 or 0.6 Sp. 3	Piers	0.5 Sp. 2
I_s	(in^4)	3620	3620	3620
I_c (n)	(in^4)	12593	———	12593
I_c (3n)	(in^4)	9395	———	9395
I_c (cr)	(in^4)	———	5771	———
S_s	(in^3)	267	267	267
S_c (n)	(in^3)	448	———	448
S_c (3n)	(in^3)	406	———	406
S_c (cr)	(in^3)	———	337	———
S_x	(in^3)	———	———	———
DC1	(k/')	0.957	0.957	0.957
M_{DC1}	('k)	94	147	66
DC2	(k/')	0.127	0.127	0.127
M_{DC2}	('k)	14	22	10
DW	(k/')	0.148	0.148	0.148
M_{DW}	('k)	17	26	11
LLDF		0.629	0.617	0.606
M_{LL+IM}	('k)	362	293	329
f_ℓ (Strength I)	(ksi)	0	0	0
$M_u + {}^1/_3 f_\ell S_x$	('k)	794	763	687
$\Phi_f M_n$	('k)	———	———	———
f_s DC1	(ksi)	4.23	6.60	2.96
f_s DC2	(ksi)	0.37	0.78	0.27
f_s DW	(ksi)	0.45	0.93	0.29
f_s (LL+IM)	(ksi)	9.69	10.44	8.80
f_ℓ (Service II)	(ksi)	0	0	0
$f_s + {}^{f\ell}/_2$ (Service II)	(ksi)	17.65	21.88	14.97
Service II Resistance	(ksi)	31.35	26.40	31.35
$f_s + {}^{f\ell}/_3$ (Strength I)	(ksi)	23.38	28.89	19.87
$\Phi_f F_n$	(ksi)	33	33	33
V_f	(k)	41	134	41

INTERIOR BEAM REACTION TABLE			
		Abut.	Pier
		Interior	Interior
LLDF		0.911	0.911
OCF		1.226	1.226
R_{DC1}	(k)	13.4	39.0
R_{DC2}	(k)	1.9	5.9
R_{DW}	(k)	2.2	6.9
R_{LL}	(k)	57.3	89.5
R_{Im}	(k)	15.5	19.9
R_{Total} (Strength I)(Impact)	(k)	149.8	257.9
R_{Total} (Strength I)(No Impact)	(k)	122.7	223.0

I_s , S_s : Non-composite moment of inertia and section modulus of the steel section used for computing f_s (Total-Strength I, and Service II) due to non-composite dead loads (in.⁴ and in.³).

I_c (n), S_c (n): Composite moment of inertia and section modulus of the steel and deck based upon the modular ratio, "n", used for computing f_s (Total-Strength I, and Service II) in uncracked sections due to short-term composite live loads (in.⁴ and in.³).

I_c (3n), S_c (3n): Composite moment of inertia and section modulus of the steel and deck based upon 3 times the modular ratio, "3n", used for computing f_s (Total-Strength I, and Service II) in uncracked sections, due to long-term composite (superimposed) dead loads (in.⁴ and in.³).

I_c (cr), S_c (cr): Composite moment of inertia and section modulus of the steel and longitudinal deck reinforcement, used for computing f_s (Total-Strength I and Service II) in cracked sections, due to both short-term composite live loads and long-term composite (superimposed) dead loads (in.⁴ and in.³).

S_x : Section modulus about the major axis of a section to the controlling flange, tension or compression, taken as yield moment with respect to the controlling flange over the yield strength of the controlling flange (in.³).

DC1: Un-factored non-composite dead load (kips/ft.).

M_{DC1}: Un-factored moment due to non-composite dead load (kip-ft.).

DC2: Un-factored long-term composite (superimposed excluding future wearing surface) dead load (kips/ft.).

M_{DC2}: Un-factored moment due to long-term composite (superimposed excluding future wearing surface) dead load (kip-ft.).

DW: Un-factored long-term composite (superimposed future wearing surface only) dead load (kips/ft.).

M_{DW} : Un-factored moment due to long-term composite (superimposed future wearing surface only) dead load (kip-ft.).

LLDF: Live Load Distribution Factor for moment and shear computed according to Article 4.6.2.2 and further IDOT provisions.

M_{LL+IM}: Un-factored live load moment plus dynamic load allowance (impact) (kip-ft.).

M_u : Strength I load combination of factored design moments (kip-ft.).
$1.25\ (M_{DC1} + M_{DC2}) + 1.5\ M_{DW} + 1.75\ M^{LL+IM}$

f_ℓ : Factored calculated flange lateral bending stress as calculated using Article 6.10.1.6 and as further simplified by IDOT provisions (ksi).

$\Phi_f M_n$: Factored nominal flexural resistance of the section determined as specified in Article 6.10.7.1 or A6 as applicable (kip-ft.).

f_s DC1: Un-factored stress at edge of flange for controlling steel flange due to vertical non-composite dead loads as calculated below (ksi).
M_{DC1} / S_s

f_s DC2: Un-factored stress at edge of flange for controlling steel flange due to vertical composite dead loads as calculated below (ksi).
M_{DC2} / S_c (3n) or M_{DC2} / S_c (cr) as applicable.

f_s DW: Un-factored stress at edge of flange for controlling steel flange due to vertical composite future wearing surface loads as calculated below (ksi).
M_{DW} / S_c (3n) or M_{DW} / S_c (cr) as applicable.

f_s (LL+ IM): Un-factored stress at edge of flange for controlling steel flange due to vertical composite live load plus impact loads as calculated below (ksi).
M_{LL+IM} / S_c (n) or M_{LL+IM} / S_c (cr) as applicable.

$f_s + f_\ell / 2$ (Service II): Sum of stresses as computed below (ksi).
f_s DC1 + f_s DC2 + f_s DW + 1.3 f_s (LL+ IM) + f_ℓ /2

Service II Resistance: Composite ($0.95R_hF_{yf}$) or noncomposite ($0.80R_hF_{yf}$) stress capacity according to Article 6.10.4.2 (ksi).

$f_s + f_\ell / 3$ (Strength I): Sum of stresses as computed below on non-compact sections (ksi).
1.25 (f_s DC1 + f_s DC2) + 1.5 f_s DW + 1.75 f_s (LL+ IM) + f_ℓ /3

$\Phi_f F_n$: Factored nominal flexural resistance of the section as specified in Article 6.10.7.2 or 6.10.8 as applicable (ksi).

V_f: Maximum factored shear range in span computed according to Article 6.10.10.

OCF: Obtuse Correction Factor according to Article 4.6.2.2.3c or as further simplified by IDOT provisions.

R_{DC1}: Un-factored reaction due to non-composite dead load (kip).

R_{DC2}: Un-factored reaction due to long-term composite (superimposed excluding future wearing surface) dead load (kip).

R_{DW} : Un-factored reaction due to long-term composite (superimposed future wearing surface only) dead load (kip).

R_{LL} : Un-factored live load reaction (kip).

R_{IM} : Un-factored dynamic load allowance (impact) (kip).

R_{Total} (Strength I)(Impact): Strength I load combination of factored design reactions (kip).
$1.25\ (R_{DC1} + R_{DC2}) + 1.5R_{DW} + 1.75\ (R_{LL} + R_{IM})$

R_{Total} (Strength I)(No Impact): Strength I load combination of factored design reactions, not including dynamic load allowance (Impact) (kip).
$1.25\ (R_{DC1} + R_{DC2}) + 1.5R_{DW} + 1.75\ (R_{LL})$

Note:
M_{LL} and R_{LL} include the effects of centrifugal force and superelevation.

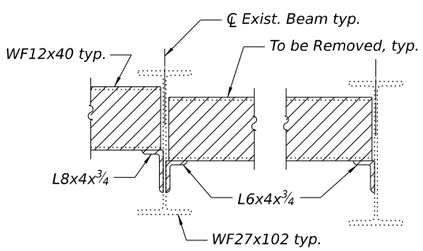

SECTION B-B

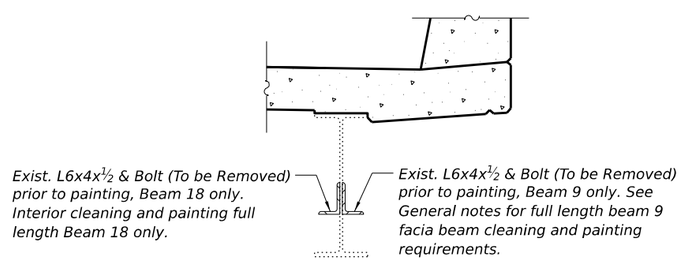

SECTION C-C

MODEL: $MODELNAMES
FILE NAME: D876E84-028-0018-0019-STRUCT STEEL DET.dgn

Jacobs
525 West Monroe
Suite 1600
Chicago, IL 60661
(312) 251-3000

USER NAME = jacobspw18lcs11$	DESIGNED - CJF	REVISED -	
	DRAWN - EAK	REVISED -	
PLOT SCALE = 0.16666667 ' / in.	CHECKED - ED	REVISED -	
PLOT DATE = 12/4/2025	DATE - 2025/10/03	REVISED -	

STATE OF ILLINOIS
DEPARTMENT OF TRANSPORTATION

STRUCTURAL STEEL DETAILS
STRUCTURE NO. 082–0018 (WB) & 082–0019 (EB)

SCALE: NTS | SHEET 25 OF 39 SHEETS | STA. | TO STA.

F.A.I. RTE.	SECTION	COUNTY	TOTAL SHEETS	SHEET NO.
70	Section82-(5,6)RS-2, 60-6RS-2	MADISON & ST. CLAIR	678	396
		CONTRACT NO. 76E84		
		ILLINOIS FED. AID PROJECT		

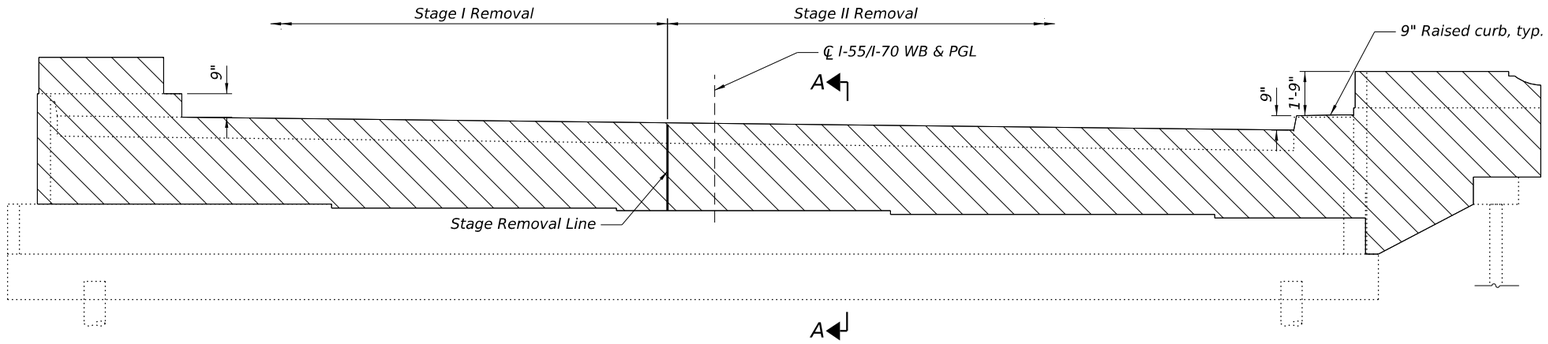

ELEVATION
(Looking North)

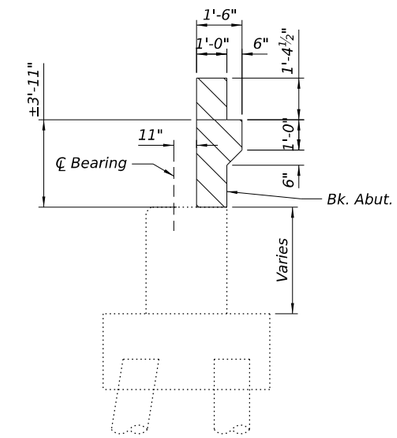

SECTION A-A
(Dimensions in A-A at Rt. L's to Bk. Wall)

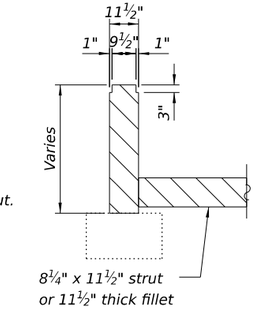

SECTION B-B

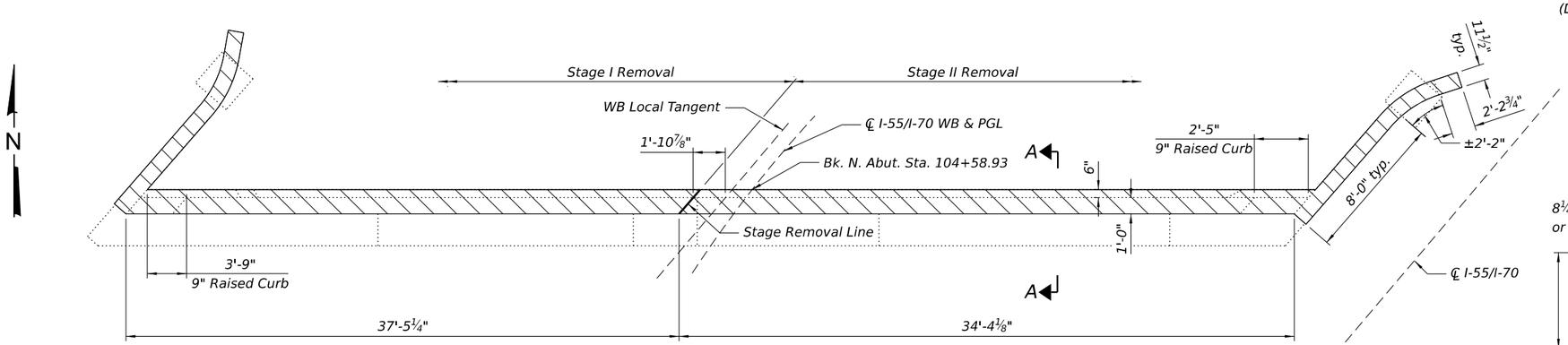

TOP PLAN

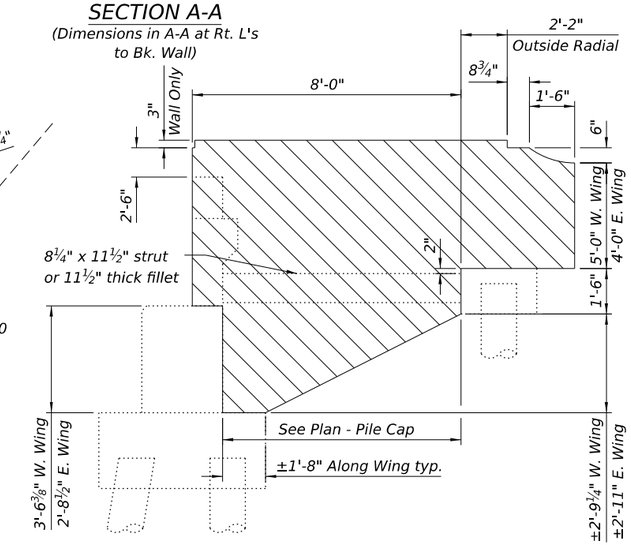

ELEVATION - WINGWALL REMOVAL

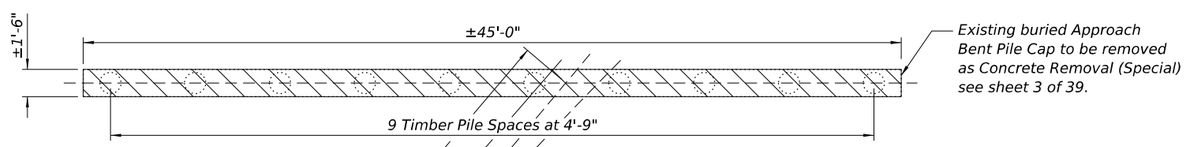

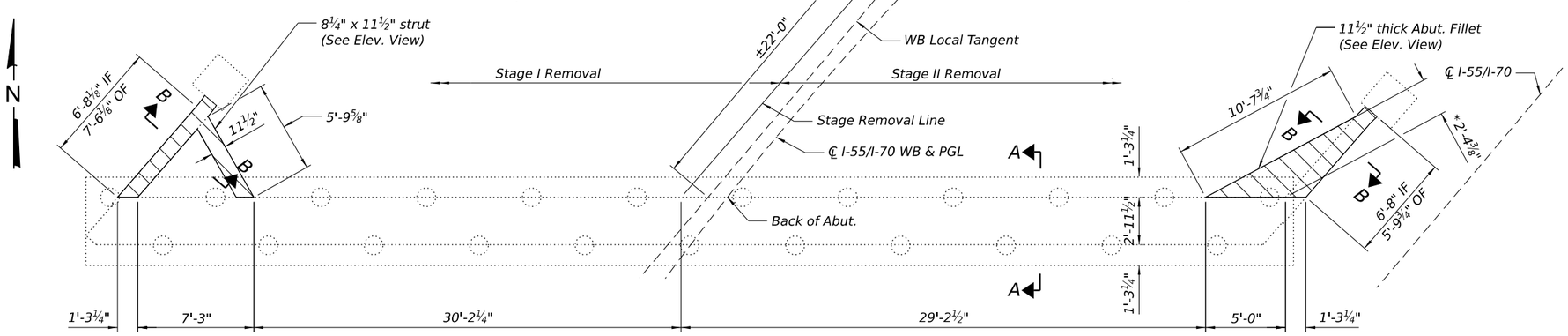

PLAN - PILE CAP

* at Rt. L's to abut. fillet

Notes:
Reinforcement bars exposed at the surface after concrete removal is complete shall be cut flush with the remaining concrete surface. Grind existing exposed steel smooth and seal with epoxy. Cost included with Concrete Removal.
Hatched areas indicate Concrete Removal.
Any reinforcement bars that are damaged during concrete removal operation shall be repaired or replaced using an approved bar splicer or anchorage system. Cost included with Concrete Removal.
IF indicates inside face.
OF indicates outside face.

BILL OF MATERIAL

ITEM	UNIT	TOTAL
Concrete Removal	Cu. Yd.	24.2
Concrete Removal (Special)	Cu. Yd.	3.8

MODEL: $MODELNAME$
FILE NAME: D876E84-027A-0018-0019-ABUT DEMO WB-N ABUT.dgn

Jacobs
525 West Monroe
Suite 1600
Chicago, IL 60661
(312) 251-3000

USER NAME = jacobspw18cs09$	DESIGNED - CJF	REVISED -	
	DRAWN - EAK	REVISED -	
PLOT SCALE = 0.16666667 ' / in.	CHECKED - ED	REVISED -	
PLOT DATE = 12/4/2025	DATE - 2025/10/03	REVISED -	

STATE OF ILLINOIS
DEPARTMENT OF TRANSPORTATION

WESTBOUND NORTH ABUTMENT REMOVAL DETAILS
STRUCTURE NO. 082-0018 (WB) & 082-0019 (EB)

SCALE: NTS | SHEET 26 OF 39 SHEETS | STA. | TO STA.

F.A.I. RTE.	SECTION	COUNTY	TOTAL SHEETS	SHEET NO.
70	Section82-(5,6)RS-2, 60-6RS-2	MADISON & ST. CLAIR	678	397

CONTRACT NO. 76E84
ILLINOIS | FED. AID PROJECT

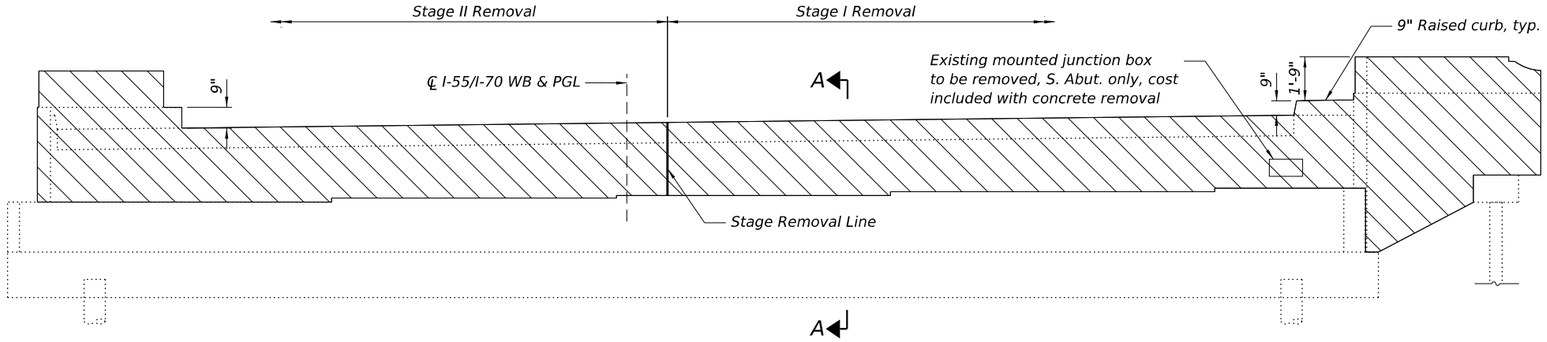

ELEVATION
(Looking South)

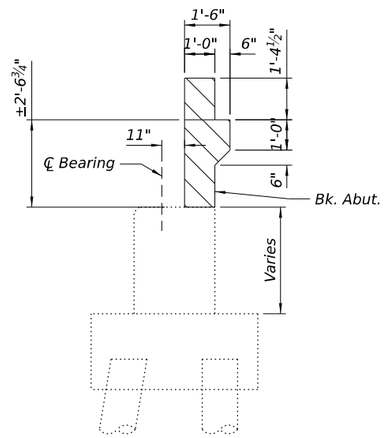

SECTION A-A
(Dimensions in A-A at Rt. L's to Bk. Wall)

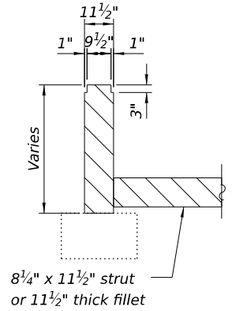

SECTION B-B

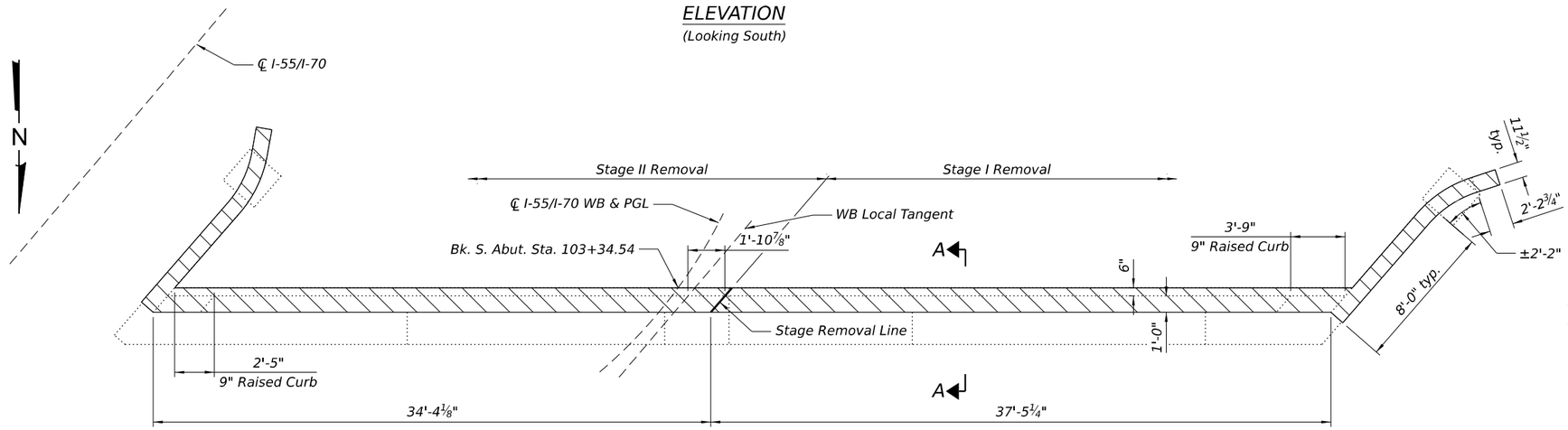

TOP PLAN

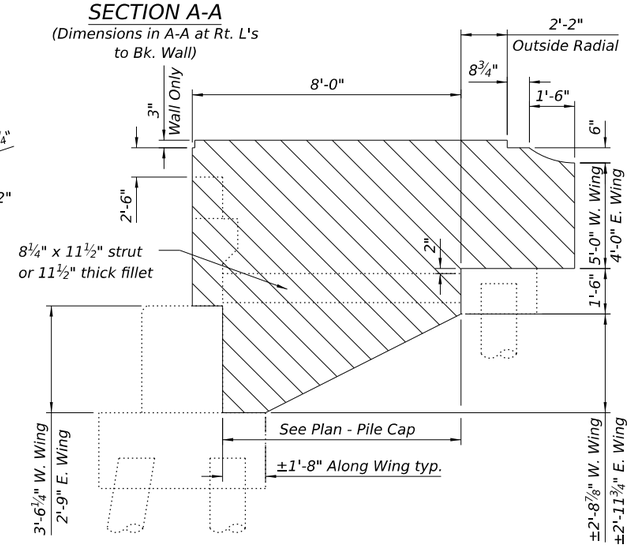

ELEVATION - WINGWALL REMOVAL

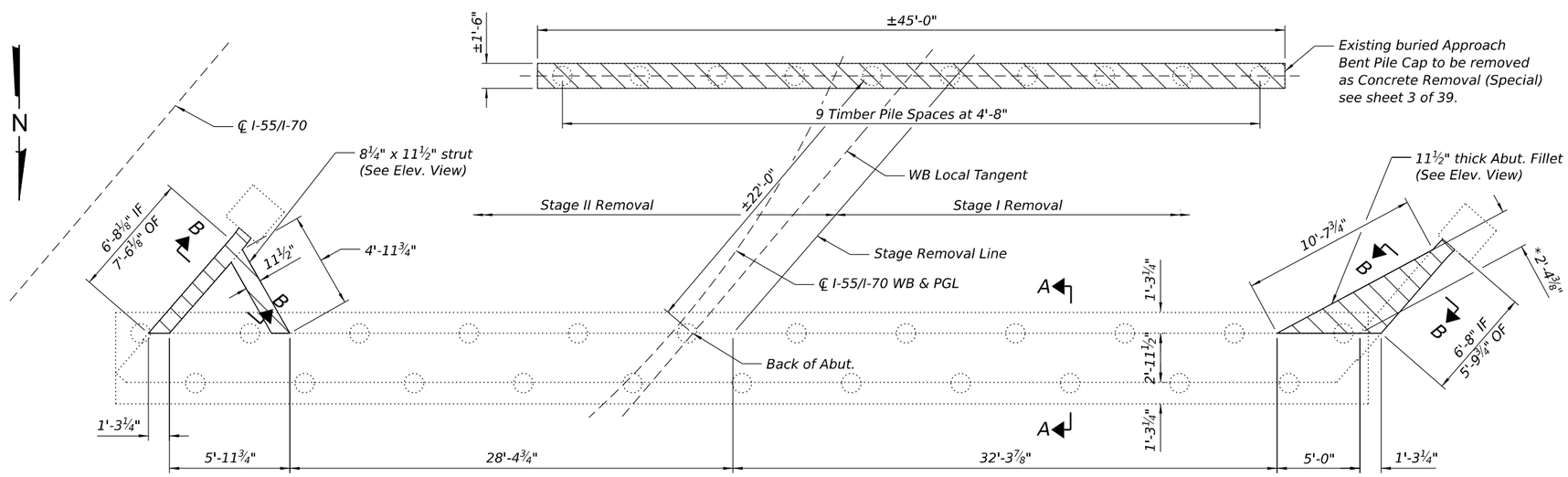

PLAN - PILE CAP

* at Rt. L's to abut. fillet

Notes:
Reinforcement bars exposed at the surface after concrete removal is complete shall be cut flush with the remaining concrete surface. Grind existing exposed steel smooth and seal with epoxy. Cost included with Concrete Removal.
Hatched areas indicate Concrete Removal.
Any reinforcement bars that are damaged during concrete removal operation shall be repaired or replaced using an approved bar splicer or anchorage system. Cost included with Concrete Removal.
IF indicates inside face.
OF indicates outside face.

BILL OF MATERIAL

ITEM	UNIT	TOTAL
Concrete Removal	Cu. Yd.	20.6
Concrete Removal (Special)	Cu. Yd.	3.8

MODEL: $MODELNAMES
FILE NAME: D876E84-027B-0018-0019-ABUT DEMO WB-S ABUT.dgn

Jacobs
525 West Monroe
Suite 1600
Chicago, IL 60661
(312) 251-3000

USER NAME = jacobspw18ics10$	DESIGNED - CJF	REVISED -	
	DRAWN - EAK	REVISED -	
PLOT SCALE = 0.16666667 ' / in.	CHECKED - ED	REVISED -	
PLOT DATE = 12/4/2025	DATE - 2025/10/03	REVISED -	

STATE OF ILLINOIS
DEPARTMENT OF TRANSPORTATION

WESTBOUND SOUTH ABUTMENT REMOVAL DETAILS
STRUCTURE NO. 082-0018 (WB) & 082-0019 (EB)

SCALE: NTS | SHEET 27 OF 39 SHEETS | STA. | TO STA.

F.A.I. RTE.	SECTION	COUNTY	TOTAL SHEETS	SHEET NO.
70	Section82-(5,6)RS-2, 60-6RS-2	MADISON & ST. CLAIR	678	398

CONTRACT NO. 76E84
ILLINOIS | FED. AID PROJECT

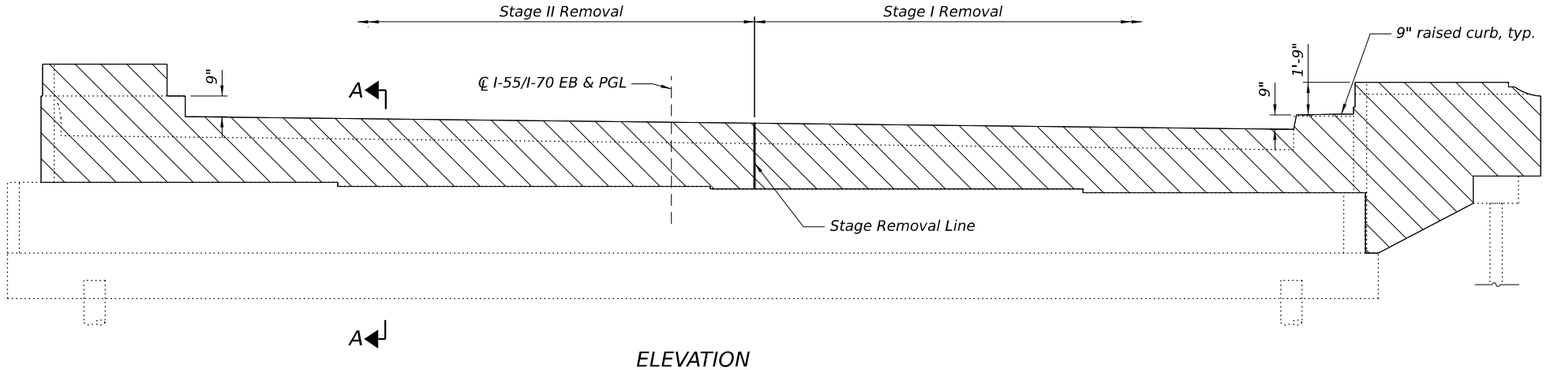

ELEVATION
(Looking North)

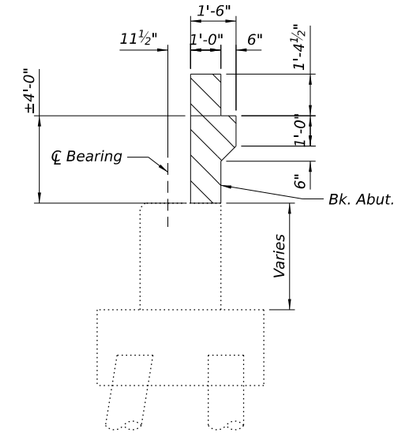

SECTION A-A
(Dimensions in A-A at Rt. L's to Bk. Wall)

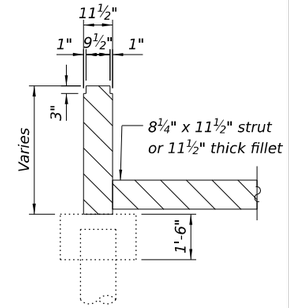

SECTION B-B

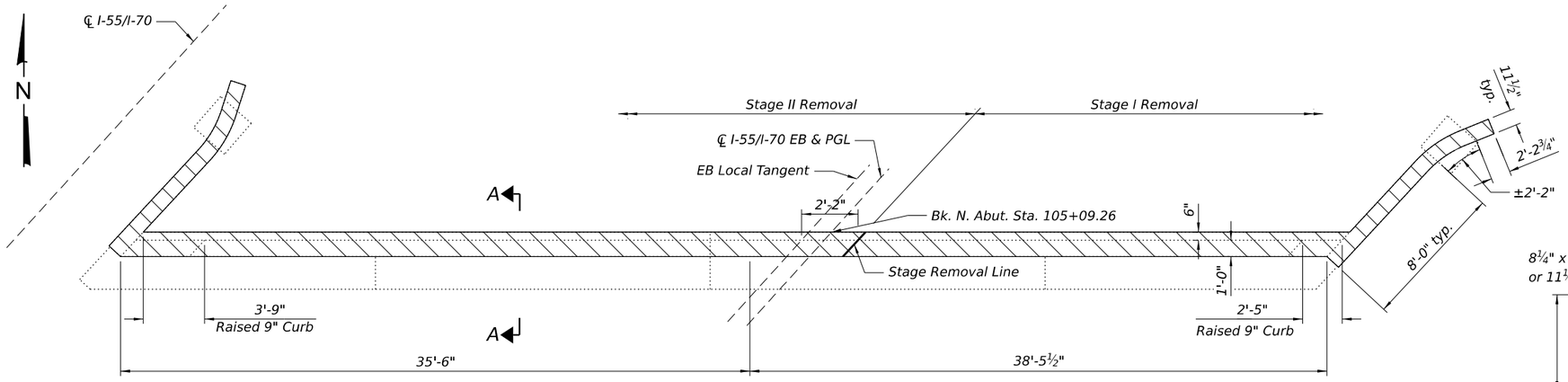

TOP PLAN

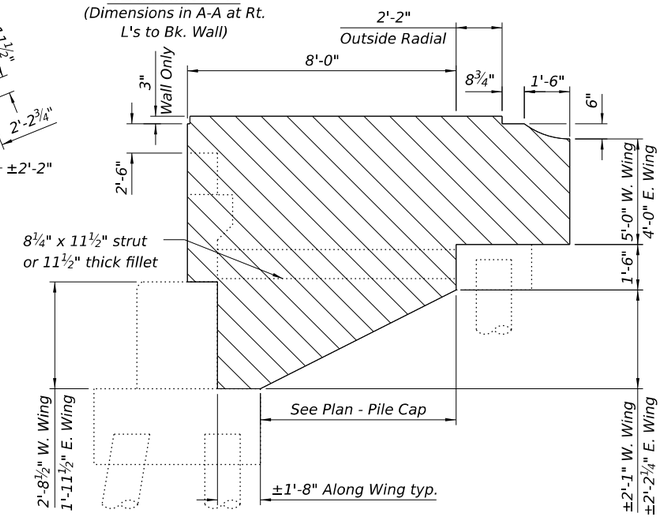

ELEVATION - WINGWALL REMOVAL

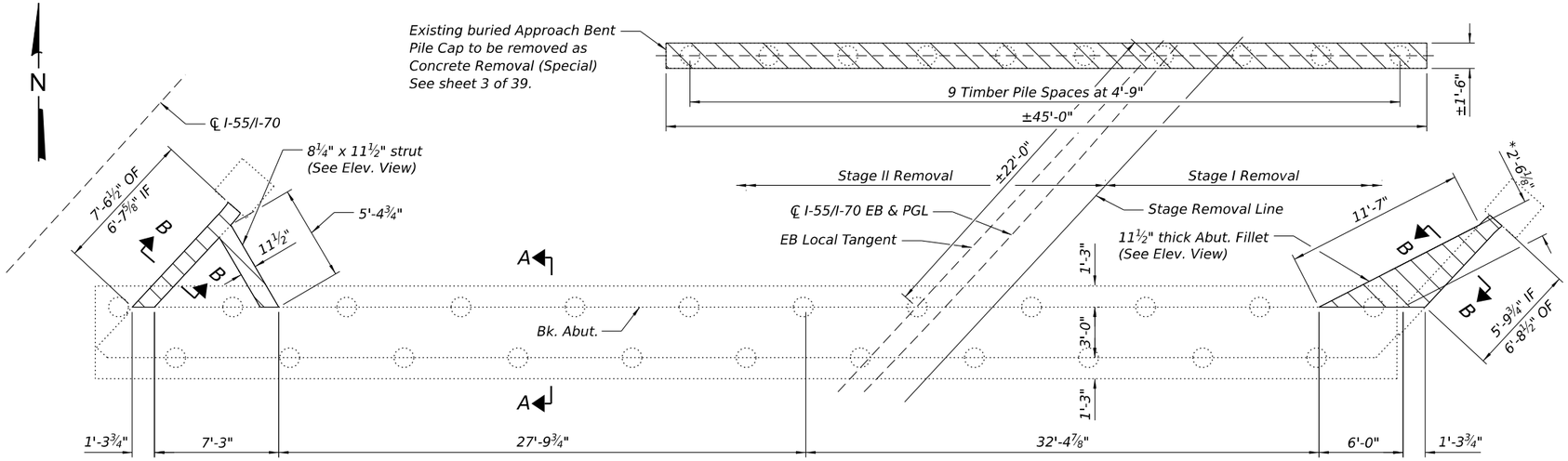

PLAN - PILE CAP

* at Rt. L's to abut. fillet

Notes:
Reinforcement bars exposed at the surface after concrete removal is complete shall be cut flush with the remaining concrete surface. Grind existing exposed steel smooth and seal with epoxy. Cost included with Concrete Removal.
Hatched areas indicate Concrete Removal.
Any reinforcement bars that are damaged during concrete removal operation shall be repaired or replaced using an approved bar splicer or anchorage system. Cost included with Concrete Removal.
IF indicates inside face.
OF indicates outside face.

BILL OF MATERIAL

ITEM	UNIT	TOTAL
Concrete Removal	Cu. Yd.	24.7
Concrete Removal (Special)	Cu. Yd.	3.8

MODEL: $MODELNAMES
FILE NAME: D876E84-028A-0018-0019-ABUT DEMO EB-N ABUT.dgn

Jacobs
525 West Monroe
Suite 1600
Chicago, IL 60661
(312) 251-3000

USER NAME = Jacobspw18cs10$	DESIGNED - CJF	REVISED -	
	DRAWN - EAK	REVISED -	
PLOT SCALE = 0.16666667 ' / in.	CHECKED - ED	REVISED -	
PLOT DATE = 12/4/2025	DATE - 2025/10/03	REVISED -	

STATE OF ILLINOIS
DEPARTMENT OF TRANSPORTATION

EASTBOUND NORTH ABUTMENT REMOVAL DETAILS
STRUCTURE NO. 082-0018 (WB) & 082-0019 (EB)

SCALE: NTS | SHEET 28 OF 39 SHEETS | STA. | TO STA.

F.A.I. RTE.	SECTION	COUNTY	TOTAL SHEETS	SHEET NO.
70	Section82-(5,6)RS-2, 60-6RS-2	MADISON & ST. CLAIR	678	399
		CONTRACT NO. 76E84		
		ILLINOIS	FED. AID PROJECT	

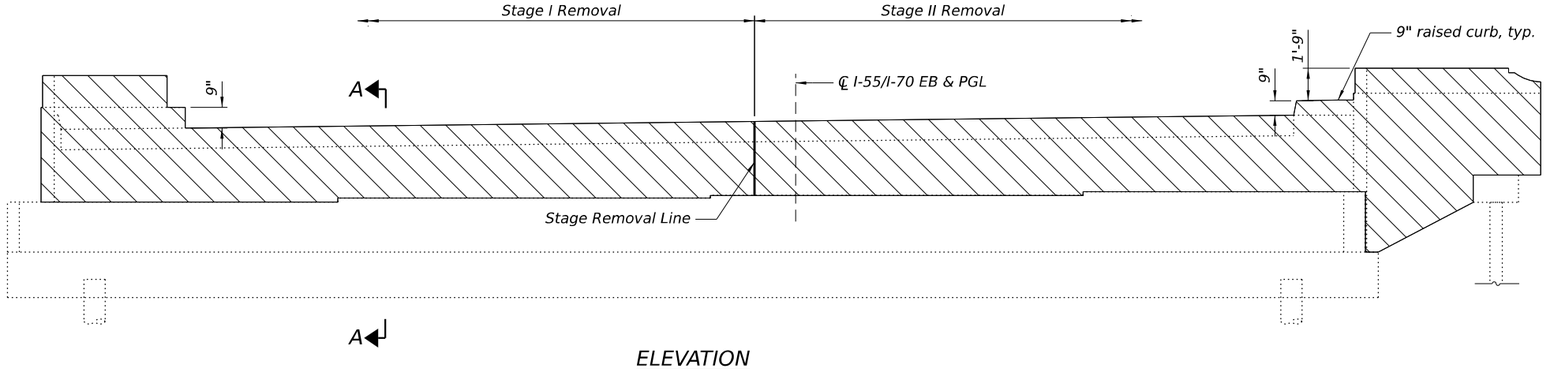

ELEVATION
(Looking South)

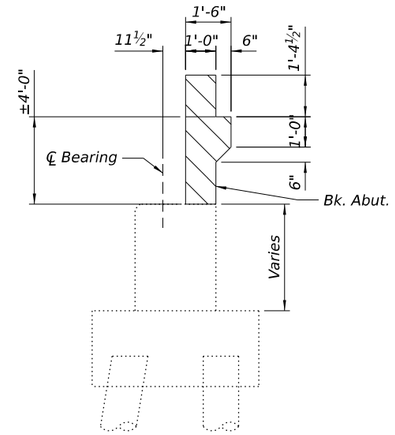

SECTION A-A
(Dimensions in A-A at Rt. L's to Bk. Wall)

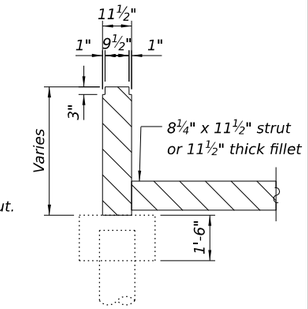

SECTION B-B

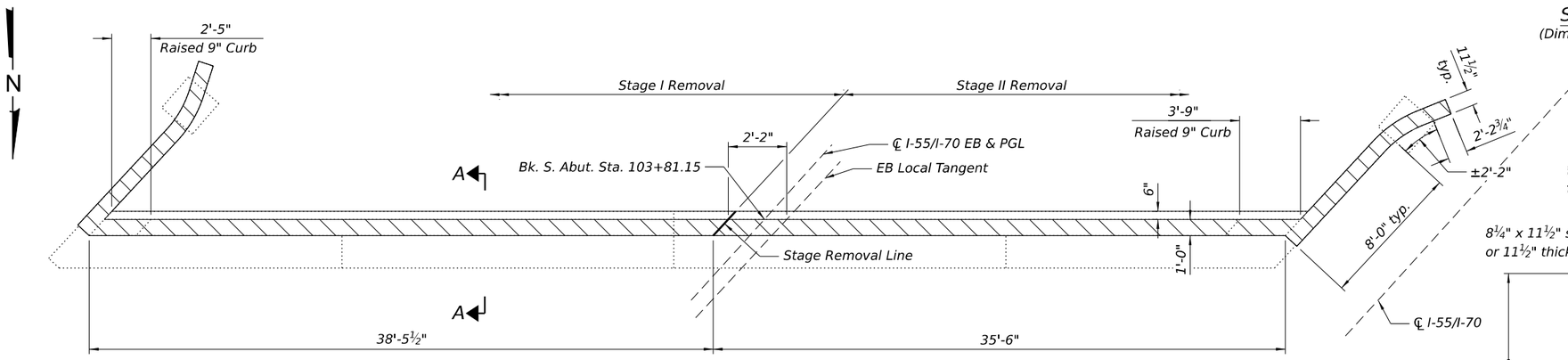

TOP PLAN

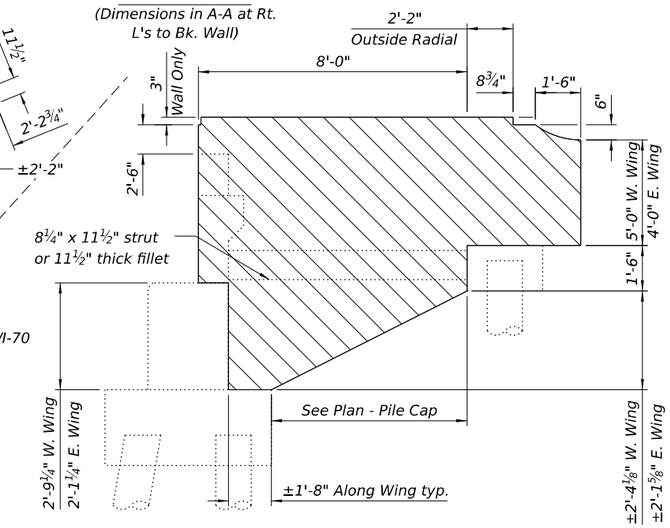

ELEVATION - WINGWALL REMOVAL

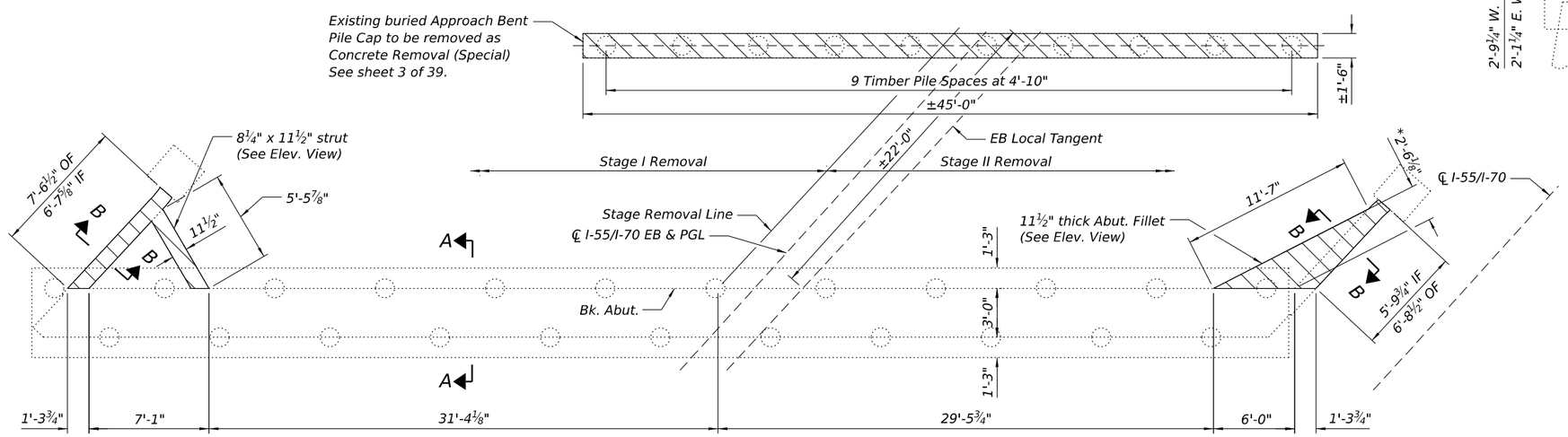

PLAN - PILE CAP

* at Rt. L's to abut. fillet

Notes:
Reinforcement bars exposed at the surface after concrete removal is complete shall be cut flush with the remaining concrete surface. Grind existing exposed steel smoth and seal with epoxy. Cost included with Concrete Removal.
Hatched areas indicate Concrete Removal.
Any reinforcement bars that are damaged during concrete removal operation shall be repaired or replaced using an approved bar splicer or anchorage system. Cost included with Concrete Removal.
IF indicates inside face.
OF indicates outside face.

BILL OF MATERIAL

ITEM	UNIT	TOTAL
Concrete Removal	Cu. Yd.	24.8
Concrete Removal (Special)	Cu. Yd.	3.8

MODEL: $MODELNAMES
FILE NAME: D876E84-028B-0018-0019-ABUT DEMO EB-S ABUT.dgn

Jacobs
525 West Monroe
Suite 1600
Chicago, IL 60661
(312) 251-3000

USER NAME = Jacobspw18cs11$	DESIGNED - CJF	REVISED -	
	DRAWN - EAK	REVISED -	
PLOT SCALE = 0.16666667 ' / in.	CHECKED - ED	REVISED -	
PLOT DATE = 12/4/2025	DATE - 2025/10/03	REVISED -	

STATE OF ILLINOIS
DEPARTMENT OF TRANSPORTATION

EASTBOUND SOUTH ABUTMENT REMOVAL DETAILS
STRUCTURE NO. 082–0018 (WB) & 082–0019 (EB)

SCALE: NTS | SHEET 29 OF 39 SHEETS | STA. | TO STA.

F.A.I. RTE.	SECTION	COUNTY	TOTAL SHEETS	SHEET NO.
70	Section82-(5,6)RS-2, 60-6RS-2	MADISON & ST. CLAIR	678	400

CONTRACT NO. 76E84
ILLINOIS FED. AID PROJECT