F.A.P RTE.	SECTION	COUNTY	TOTAL SHEETS	SHEET NO.
554	34RS-5	PIKE	51	1
		ILLINOIS	CONTRACT NO. 72307	

01-16-2026 LETTING ITEM 081

STATE OF ILLINOIS
DEPARTMENT OF TRANSPORTATION

D-96-014-23

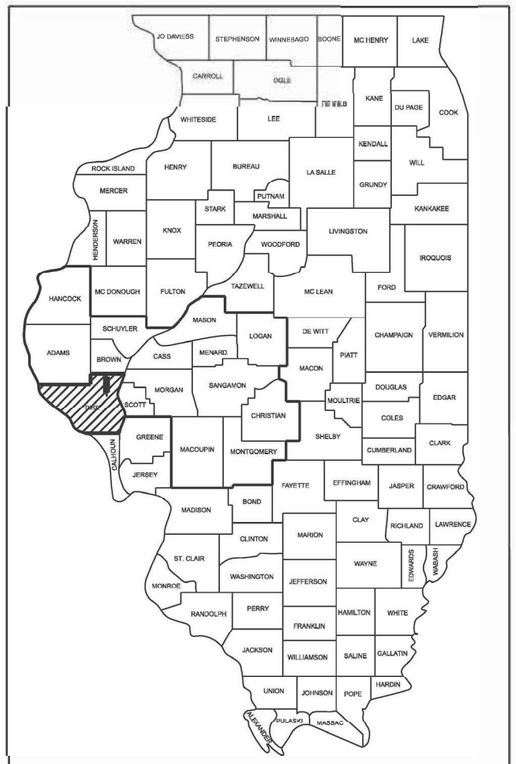

LOCATION OF SECTION INDICATED THUS: -

FOR INDEX OF SHEETS, SEE SHEET NO. 2

PROPOSED HIGHWAY PLANS

F.A.P. ROUTE 554 (IL 107)
SECTION 34RS-5
PROJECT STP-A26S(696)
DESIGN OVERLAY, MISCELLANEOUS
PIKE COUNTY
C-96-052-23

HIGHWAY CLASSIFICATION
FAP 554 (IL 107)
CLASSIFICATION: MINOR ARTERIAL
DESIGN SPEED 60 & 55 MPH
POSTED SPEED 55 & 50 MPH
ADT: 775 (2023)
PV= 81.94%
MU= 10.32%
SU= 7.74%

(STA EQN):
STA 658+83.99 (BK) =
STA 659+02.62 (AH)

(BRIDGE OMISSION #1):
SN: 075-0012
STA 665+61.50 TO 667+88.60
(over MIDDLE FORK MCKEE CRK)

(BRIDGE OMISSION #2):
SN: 075-0013
STA 850+79.90 TO 852+64.10
(over S FORK MCKEE CRK)

BEGIN PROJECT
STA 536+00.00

SN: 075-7140
Ex. Box Culv 9'x4'
STA. 673+81.80

SN: 075-7141
Ex. Box Culv 6'x6'
STA. 675+19.20

SN: 075-7142
Ex. Box Culv 4'x3'
STA. 792+66.60

SN: 075-7143
Ex. Box Culv 8'x6'
STA. 808+50.80

SN: 075-7144
Ex. Box Culv 10'x5'
STA. 871+54.50

END PROJECT
STA 1020+54.00

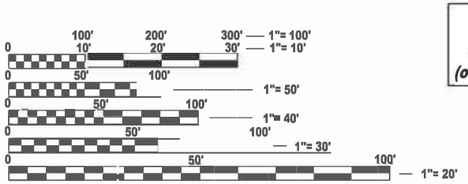

FULL SIZE PLANS HAVE BEEN PREPARED USING STANDARD ENGINEERING SCALES. REDUCED SIZED PLANS WILL NOT CONFORM TO STANDARD SCALES. IN MAKING MEASUREMENTS ON REDUCED PLANS, THE ABOVE SCALES MAY BE USED.

J.U.L.I.E.
JOINT UTILITY LOCATION INFORMATION FOR EXCAVATION
1-800-892-0123
OR 811

GROSS LENGTH = 48,435.37 FT = 9.17 MI
NET LENGTH = 47,899.07 FT = 9.07 MILE

STATE OF ILLINOIS
DEPARTMENT OF TRANSPORTATION

SUBMITTED August 15 20 25
Teresa C. Price
REGIONAL ENGINEER

October 3 20 25
ENGINEER OF DESIGN AND ENVIRONMENT

October 3 20 25
DIRECTOR OF HIGHWAYS PROJECT IMPLEMENTATION

PROJECT ENGINEER: BRIAN LANINGHAM (217) 782-6990
TEAM ENGINEER: RENE CABRERA (217) 558-5140

CONTRACT NO. 72307

PRINTED BY THE AUTHORITY OF THE STATE OF ILLINOIS

INDEX OF SHEETS

HIGHWAY STANDARDS

000000-09	STANDARD SYMBOLS, ABBREVIATIONS, AND PATTERNS
001006	DECIMAL OF AN INCH AND OF A FOOT
606101-05	TYPE A GUTTER (INLET, OUTLET, AND ENTRANCE)
630001-13	STEEL PLATE BEAM GUARDRAIL
630301-09	SHOULDER WIDENING FOR TYPE 1 (SPECIAL) GUARDRAIL TERMINALS
701001-02	OFF-ROAD OPERATION, 2L, 2W, MORE THAN 15' (4.5 m) AWAY
701006-05	OFF-ROAD OPERATION, 2L, 2W, 15' (4.5 m) TO 24" (600 mm) FROM EDGE OF PAVEMENT
701201-05	LANE CLOSURE, 2L, 2W, DAY ONLY, FOR SPEEDS ≥ 45 MPH
701301-04	LANE CLOSURE, 2L, 2W, SHORT TIME OPERATIONS
701306-04	LANE CLOSURE, 2L, 2W, SLOW MOVING OPERATIONS DAY ONLY, FOR SPEEDS ≥ 45 MPH
701311-03	LANE CLOSURE, 2L, 2W, MOVING OPERATIONS - DAY ONLY
701316-14	LANE CLOSURE, 2L, 2W, BRIDGE REPAIR, FOR SPEEDS ≥ 45 MPH
701326-04	LANE CLOSURE, 2L, 2W, PAVEMENT WIDENING, FOR SPEEDS ≥ 45 MPH
701901-11	TRAFFIC CONTROL DEVICES
780001-05	TYPICAL PAVEMENT MARKING
781001-04	TYPICAL APPLICATIONS OF RAISED REFECTIVE PAVEMENT MARKINGS
782006-01	GUARDRAIL AND BARRIER WALL REFLECTOR MOUNTING DETAILS

GENERAL NOTES

1. ALL ELEVATIONS SHOWN ON THE PLANS ARE ESTABLISHED FROM NAVD-88.
2. EXACT LOCATIONS AND SIZES OF PAVEMENT PATCHES SHALL BE DETERMINED BY THE ENGINEER IN THE FIELD.
3. THE APPROXIMATE AVERAGE THICKNESS OF 1 1/2" IS USED FOR CALCULATING QUANTITY FOR AGGREGATE WEDGE SHOULDER, TYPE B.
4. PROPOSED SUPERELEVATIONS SHOWN IN THE TYPICAL SECTIONS ARE REFERENCED FROM EXISTING PLANS AND SHALL MATCH EXISTING PAVEMENT GRADES AND TRANSITIONS. THE ENGINEER SHALL FIELD VERIFY ALL EXISTING SUPERELEVATIONS.
5. ALL AGGREGATE SURFACE COURSE SHALL BE DETERMINED IN THE FIELD BY THE ENGINEER.
6. THE CONTRACTOR SHALL NOTIFY DISTRICT 6 BUREAU OF OPERATIONS AT (217) 785-5306 THREE WEEKS PRIOR TO IMPLEMENTING ANY TRAFFIC CONTROL.
7. NO PASSING ZONES SHALL BE FIELD VERIFIED AND DOCUMENTED BY THE RESIDENT ENGINEER. THE RESIDENT ENGINEER SHALL NOTIFY THE DISTRICT 6 TRAFFIC OPERATIONS ENGINEER OF ANY CONCERNS WITH THE EXISTING NO PASSING ZONES AT LEAST 14 DAYS PRIOR TO PLACEMENT OF FINAL PERMANENT PAVEMENT MARKING. PHONE (217) 785-5306.
8. THE FOLLOWING MIXTURE REQUIREMENTS ARE APPLICABLE:

LOCATION(S):	IL 107	IL 107	IL 107	IL 107	IL 107	Side Rds & Entr
MIXTURE USE(S):	HMA CONC SURF CSE	HMA CONC BIND CSE	PATCHING	HMA SHLDR (bottom lift)	HMA SHLDR (top lift)	INCIDENTAL HMA SURF
AC/PG:	SBS PG 70-28	PG 58-28	PG 64-22	PG 64-22	PG 64-22	PG 64-22
DESIGN AIR VOIDS	4.0% @ N design = 50	4.0% @ N design = 50	4.0% @ N design = 50	4.0% @ N design = 50	4.0% @ N design = 50	4.0% @ N design = 50
MIXTURE COMPOSITION: (Gradation Mixture)	IL-9.5	IL-9.5FG	IL-19.0	IL-19.0	IL-9.5	IL-9.5
FRICTION AGGREGATE:	MIX "C"	N/A	N/A	N/A	MIX "C"	MIX "C"
MIXTURE WEIGHT:	112 LB/SY * IN	112 LB/SY * IN	112 LB/SY * IN	112 LB/SY * IN	112 LB/SY * IN	112 LB/SY * IN
QUALITY MANAGEMENT:	QCP	QCP	QC/QA	QC/QA	QC/QA	QC/QA
SUBLOT SIZE:	1,000 TONS	1,000 TONS	N/A	N/A	N/A	N/A
MTD REQUIRED:	YES	NO	NO	NO	NO	NO

NOTE: NUCLEAR GAUGES SHALL BE USED FOR DENSITY VERIFICATION BY ENGINEER ON HMA SHOULDERS.

COMMITMENTS

(NONE)

APPLICATION RATES

THE FOLLOWING RATES OF APPLICATION WERE UTILIZED TO CALCULATE PLAN QUANTITIES.

BITUMINOUS MATERIALS (TACK COAT): .05 LBS / SQ FT (FOR MILLED SURFACE)
.025 LBS / SQ FT (FOR LIFTS)

HMA SURFACE MIX C & D / BINDER (112 LBS): .056 TONS / (SQ YD*IN)

AGGREGATE MATERIALS: 1.60 TONS / CU YD

STONE RIPRAP: 1.50 TONS / CU YD

SHRINKAGE FACTOR: 0.25

NITROGEN FERTILIZER NUTRIENT: 90 LBS / ACRE

PHOSPHOROUS FERTILIZER NUTRIENT: 90 LBS / ACRE

POTASSIUM FERTILIZER NUTRIENT: 90 LBS / ACRE

AGRICULTURAL GROUND LIMESTONE: 2 TONS / ACRE

MULCH, METHOD 2: 2 TONS / ACRE

TEMPORARY EROSION CONTROL SEEDING: 100 LBS / ACRE

STATE OF ILLINOIS
DEPARTMENT OF TRANSPORTATION
DIVISION OF HIGHWAYS
DISTRICT 6

EXAMINED August 8, 20 25
ENGINEER OF OPERATIONS

EXAMINED August 8, 20 25
ENGINEER OF PROJECT IMPLEMENTATION

EXAMINED August 8, 20 25
ENGINEER OF PROGRAM DEVELOPMENT

REV - MS

MODEL: Sheet 1 [Sheet]
FILE NAME: c:\pw_work\pwidot\cabrerars\d0806269\D672307-sht-index.dgn

USER NAME = rene.cabrera	DESIGNED - RSC	REVISED -	STATE OF ILLINOIS DEPARTMENT OF TRANSPORTATION
	DRAWN - RSC	REVISED -	
	CHECKED -	REVISED -	
PLOT DATE = 8/13/2025	DATE -	REVISED -	

INDEX OF SHEETS & GENERAL NOTES

SCALE: NTS | SHEET 1 OF 1 SHEETS | STA. TO STA.

F.A.P. RTE.	SECTION	COUNTY	TOTAL SHEETS	SHEET NO.
554	34RS-5	PIKE	51	2

CONTRACT NO. 72307

ILLINOIS | FED. AID PROJECT

CODE NO.	ITEM	UNIT	TOTAL QUANTITY	6-60122-0000 80% FEDERAL 20% STATE STP FUNDING ROADWAY 0005 RURAL
20400800	FURNISHED EXCAVATION	CU YD	171	171
25000200	SEEDING, CLASS 2	ACRE	0.75	0.75
25000400	NITROGEN FERTILIZER NUTRIENT	POUND	62	62
25000500	PHOSPHORUS FERTILIZER NUTRIENT	POUND	62	62
25000600	POTASSIUM FERTILIZER NUTRIENT	POUND	62	62
25000700	AGRICULTURAL GROUND LIMESTONE	TON	1.4	1.4
25100115	MULCH, METHOD 2	ACRE	0.75	0.75
28000250	TEMPORARY EROSION CONTROL SEEDING	POUND	75	75
28100207	STONE RIPRAP, CLASS A4	TON	355	355
28200200	FILTER FABRIC	SQ YD	474	474
31101000	SUBBASE GRANULAR MATERIAL, TYPE B	TON	1,644	1,644
35800100	PREPARATION OF BASE	SQ YD	350	350
40200800	AGGREGATE SURFACE COURSE, TYPE B	TON	22	22
40600290	BITUMINOUS MATERIALS (TACK COAT)	POUND	84,466	84,466

* - INDICATES PAY ITEM REQUIRES A SPECIAL PROVISION

REV - MS

MODEL: SOQ [Sheet]
FILE NAME: c:\pw_work\pwidot\cabrerars\d0806269\D672307-sht-SOQ.dgn

USER NAME = rene.cabrera	DESIGNED - RSC	REVISED -	
	DRAWN - RSC	REVISED -	
	CHECKED -	REVISED -	
PLOT DATE = 8/15/2025	DATE -	REVISED -	

STATE OF ILLINOIS
DEPARTMENT OF TRANSPORTATION

SUMMARY OF QUANTITIES

SCALE: NTS | SHEET 1 OF 5 SHEETS | STA. | TO STA.

F.A.P. RTE.	SECTION	COUNTY	TOTAL SHEETS	SHEET NO.
554	34RS-5	PIKE	51	3

CONTRACT NO. 72307

ILLINOIS | FED. AID PROJECT

CODE NO.	ITEM	UNIT	TOTAL QUANTITY	6-60122-0000 80% FEDERAL 20% STATE STP FUNDING ROADWAY 0005 RURAL
40600370	LONGITUDINAL JOINT SEALANT	FOOT	48,416	48,416
40600405	MATERIAL TRANSFER DEVICE	TON	10,891	10,891
40600982	HOT-MIX ASPHALT SURFACE REMOVAL - BUTT JOINT	SQ YD	2,649	2,649
40600990	TEMPORARY RAMP	SQ YD	105	105
40602965	HOT-MIX ASPHALT BINDER COURSE, IL-9.5FG, N50	TON	8,363	8,363
40604150	POLYMERIZED HOT-MIX ASPHALT SURFACE COURSE, IL-9.5, MIX "C", N50	TON	10,891	10,891
40800029	BITUMINOUS MATERIALS (TACK COAT)	POUND	1,192	1,192
40800050	INCIDENTAL HOT-MIX ASPHALT SURFACING	TON	331	331
44000155	HOT-MIX ASPHALT SURFACE REMOVAL, 1 1/2"	SQ YD	131,395	131,395
44000400	GUTTER REMOVAL	FOOT	7,522	7,522
48102100	AGGREGATE WEDGE SHOULDER, TYPE B	TON	2,528	2,528
48203023	HOT-MIX ASPHALT SHOULDERS, 6 1/2"	SQ YD	273	273
48203100	HOT-MIX ASPHALT SHOULDERS	TON	286	286
60600095	CLASS SI CONCRETE (OUTLET)	CU YD	78	78

* - INDICATES PAY ITEM REQUIRES A SPECIAL PROVISION

	CODE NO.	ITEM	UNIT	TOTAL QUANTITY	6-60122-0000 80% FEDERAL 20% STATE STP FUNDING ROADWAY 0005 RURAL
	60602500	CONCRETE GUTTER, TYPE A	FOOT	6,748	6,748
*	63000007	STEEL PLATE BEAM GUARDRAIL, TYPE B, 6 FOOT POSTS	FOOT	50	50
*	63000009	STEEL PLATE BEAM GUARDRAIL, TYPE B, 9 FOOT POSTS	FOOT	350	350
*	63100167	TRAFFIC BARRIER TERMINAL, TYPE 1 (SPECIAL) TANGENT	EACH	4	4
	63200310	GUARDRAIL REMOVAL	FOOT	602	602
	67000400	ENGINEER'S FIELD OFFICE, TYPE A	CAL MO	12	12
	67100100	MOBILIZATION	L SUM	1	1
	70100100	TRAFFIC CONTROL AND PROTECTION, STANDARD 701316	EACH	5	5
	70100450	TRAFFIC CONTROL AND PROTECTION, STANDARD 701201	L SUM	1	1
	70100460	TRAFFIC CONTROL AND PROTECTION, STANDARD 701306	L SUM	1	1
	70100500	TRAFFIC CONTROL AND PROTECTION, STANDARD 701326	L SUM	1	1
	70106500	TEMPORARY BRIDGE TRAFFIC SIGNALS	EACH	5	5
	70107025	CHANGEABLE MESSAGE SIGN	CAL DA	480	480
	70300100	SHORT TERM PAVEMENT MARKING	FOOT	14,469	14,469

* - INDICATES PAY ITEM REQUIRES A SPECIAL PROVISION

* SPECIALTY ITEM

	CODE NO.	ITEM	UNIT	TOTAL QUANTITY	6-60122-0000 80% FEDERAL 20% STATE STP FUNDING ROADWAY 0005 RURAL
	70300150	SHORT TERM PAVEMENT MARKING REMOVAL	SQ FT	1,608	1,608
*	72501000	TERMINAL MARKER - DIRECT APPLIED	EACH	4	4
*	78004720	PREFORMED PLASTIC PAVEMENT MARKING, TYPE D - STANDARD - LINE 24"	FOOT	79	79
*	78009005	MODIFIED URETHANE PAVEMENT MARKING - LINE 5"	FOOT	144,515	144,515
*	78011125	GROOVING FOR RECESSED PAVEMENT MARKING 25"	FOOT	79	79
*	78100100	RAISED REFLECTIVE PAVEMENT MARKER	EACH	610	610
*	78200005	GUARDRAIL REFLECTORS, TYPE A	EACH	8	8
	78300200	RAISED REFLECTIVE PAVEMENT MARKER REMOVAL	EACH	610	610
*	X2010512	CLEARING AND GRUBBING	SQ YD	234	234
*	X2020060	EXCAVATING AND GRADING EXISTING SHOULDER, (SPECIAL)	UNIT	7	7
*	X4421000	PARTIAL DEPTH PATCHING	TON	112	112
*	X4421002	PARTIAL DEPTH PATCHING (SPECIAL)	SQ YD	667	667

* - INDICATES PAY ITEM REQUIRES A SPECIAL PROVISION

* SPECIALTY ITEM

MODEL: SOQ-3 [Sheet]
FILE NAME: c:\pw_work\pwidot\cabrerars\d0806269\D672307-sht-SOQ.dgn

USER NAME = rene.cabrera	DESIGNED - RSC	REVISED -	
	DRAWN - RSC	REVISED -	
	CHECKED -	REVISED -	
PLOT DATE = 8/15/2025	DATE -	REVISED -	

STATE OF ILLINOIS
DEPARTMENT OF TRANSPORTATION

SUMMARY OF QUANTITIES

SCALE: NTS | SHEET 4 OF 5 SHEETS | STA. TO STA.

F.A.P. RTE.	SECTION	COUNTY	TOTAL SHEETS	SHEET NO.
554	34RS-5	PIKE	51	6

CONTRACT NO. 72307

ILLINOIS | FED. AID PROJECT

	CODE NO.	ITEM	UNIT	TOTAL QUANTITY	6-60122-0000 80% FEDERAL 20% STATE STP FUNDING ROADWAY 0005 RURAL
*	Z0055300	RUMBLE STRIP	EACH	6	6
	Z0013798	CONSTRUCTION LAYOUT	L SUM	1	1
Ø	Z0076600	TRAINEES	HOUR	3000	3000
Ø	Z0076604	TRAINEES TRAINING PROGRAM GRADUATE	HOUR	3000	3000

* - INDICATES PAY ITEM REQUIRES A SPECIAL PROVISION

Ø 0042

REV - MS

MODEL: SOQ-4 [Sheet]
FILE NAME: c:\pw_work\pwidot\cabrerars\d0806269\D672307-sht-SOQ.dgn

USER NAME = rene.cabrera	DESIGNED - RSC	REVISED -	
	DRAWN - RSC	REVISED -	
	CHECKED -	REVISED -	
PLOT DATE = 8/13/2025	DATE -	REVISED -	

STATE OF ILLINOIS
DEPARTMENT OF TRANSPORTATION

SUMMARY OF QUANTITIES

SCALE: NTS | SHEET 5 OF 5 SHEETS | STA. | TO STA.

F.A.P. RTE.	SECTION	COUNTY	TOTAL SHEETS	SHEET NO.
554	34RS-5	PIKE	51	7

CONTRACT NO. 72307

ILLINOIS | FED. AID PROJECT

FURNISHED EXCAVATION

TYP SEC #	LOCATION (STA TO STA) (SHRINKAGE FACTOR = 0.25)				LENGTH (FOOT)	WIDTH (FOOT)	THICKNESS (INCH)	EMBANKMENT (CU YD)	EXCAVATION (CU YD)	(20400800) QUANTITY (CU YD)
	[F.A.P. 554 (IL 107)]									
	(STA EQN): *658+83.99 (BK) = 658+83.99 (AH)*									
	(BRIDGE OMISSION #1): *SN: 075-0012 (over MIDDLE FORK MCKEE CRK)* *665+67.40 TO 667+96.00*									
(20)	675+37.10	TO	675+62.10	LT	25.0	2.50	1.5	0.29		0.29
(21-23)	675+62.10	TO	685+50.00	LT	987.90	5.0	3	45.74	60.74	30.55
(21)	677+54.60	TO	677+79.60	RT	25.0	2.50	1.5	0.29		0.29
(21-23)	677+79.60	TO	685+50.00	RT	770.40	5.0	3	35.67	47.37	23.83
(24)	685+50.00	TO	685+75.00	LT	25.0	2.50	1.5	0.29		0.29
(24)	685+50.00	TO	685+75.00	RT	25.0	2.50	1.5	0.29		0.29
(24)	688+04.40	TO	688+29.40	RT	25.0	2.50	1.5	0.29		0.29
(25-27)	688+29.40	TO	699+62.00	RT	1,132.60	5.0	3	52.44	69.63	35.03
(28)	699+62.00	TO	699+87.00	RT	25.0	2.50	1.5	0.29		0.29
	(BRIDGE OMISSION #2): *SN: 075-0013 (over S FORK MCKEE CRK)* *850+75.50 TO 852+61.40*									
(31)	876+09.60	TO	876+34.60	LT	25.0	2.50	1.5	0.29		0.29
(32-34)	876+34.60	TO	880+69.00	LT	434.40	5.0	3	20.11	26.71	13.43
(35)	880+69.00	TO	880+94.00	LT	25.0	2.50	1.5	0.29		0.29
(35)	882+75.80	TO	883+00.80	RT	25.0	2.50	1.5	0.29		0.29
(36)	883+00.80	TO	886+70.00	RT	369.20	5.0	3	17.09	22.70	11.42
(37)	886+70.00	TO	886+95.00	RT	25.0	2.50	1.5	0.29		0.29
(37)	889+11.90	TO	889+36.90	RT	25.0	2.50	1.5	0.29		0.29
(38-40)	889+36.90	TO	897+48.60	RT	811.70	5.0	3	37.58	49.90	25.10
(41)	897+48.60	TO	897+73.60	RT	25.0	2.50	1.5	0.29		0.29
(41)	975+51.60	TO	975+76.60	RT	25.0	2.50	1.5	0.29		0.29
(42-44)	975+76.60	TO	984+59.90	RT	883.30	5.0	3	40.89	54.31	27.32
(45)	984+59.90	TO	984+84.90	RT	25.0	2.50	1.5	0.29		0.29
	(6-60122-0000) PROJECT TOTAL									171

FURNISHED EXCAVATION = EMBANKMENT - (EXCAVATION x SHRINKAGE FACTOR)

RIPRAP SCHEDULE

TYP SEC #	LOCATION (STA TO STA) Coef = 1.5 TONS / CU YD, T = 18"				LENGTH (FOOT)	WIDTH (FOOT)	(28100807) STONE RIP CL 4A (TON)	(28200200) FILTER FABRIC (SQ YD)
	[F.A.P. 554 (IL 107)]							
	(STA EQN): *658+83.99 (BK) = 658+83.99 (AH)*							
	(BRIDGE OMISSION #1): *SN: 075-0012 (over MIDDLE FORK MCKEE CRK)* *665+67.40 TO 667+96.00*							
	(Box Culv 6'x6' - STA 675+19.20)							
(20)	675+00.70	TO	675+56.20	LT	55.50	27.0	124.88	166.50
(21)	677+47.00	TO	677+63.00	RT	16.0	16.0	21.33	28.44
(24)	687+89.00	TO	688+11.00	RT	22.0	12.0	22.00	29.33
(25)	689+22.60	TO	689+42.60	LT	20.0	10.0	16.67	22.22
	(Box Culv 4'x3' - STA 792+02.60)							
(27)	792+37.70	TO	792+68.60	RT	A = 600.93 SQ FT		50.08	66.77
	(BRIDGE OMISSION #2): *SN: 075-0013 (over S FORK MCKEE CRK)* *850+75.50 TO 852+61.40*							
(31)	875+93.80	TO	876+17.80	LT	24.0	12.0	24.0	32.0
(32)	876+50.10	TO	876+62.10	RT	12.0	12.0	12.0	16.0
(35)	882+73.00	TO	882+85.00	RT	12.0	12.0	12.0	16.0
(37)	888+97.60	TO	889+21.60	RT	24.0	12.0	24.0	32.0
(38)	890+05.50	TO	890+29.50	LT	24.0	12.0	24.0	32.0
(41)	975+52.50	TO	975+04.50	RT	12.0	12.0	12.0	16.0
(42)	977+01.30	TO	977+13.30	LT	12.0	12.0	12.0	16.0
	(6-60122-0000) PROJECT TOTAL						355	474

CONCRETE GUTTER, TYPE A SCHEDULE

TYP SEC #	LOCATION (STA TO STA)				TYPE	LENGTH (FOOT)	TY A GUTTER EXTENSION (FOOT)	SUB GRAN WIDTH (FOOT)	(44000400) GUTTER REM (FOOT)	(31101000) SUB GRAN MAT B (TON)	(60602500) CONC GUTTER TA (FOOT)	(60600095) CLASS SI CONC OUTLET (CU YD)
	[F.A.P. 554 (IL 107)]											
	(STA EQN): *658+83.99 (BK) = 659+02.62 (AH)*											
	(BRIDGE OMISSION #1): *SN: 075-0012 (over MIDDLE FORK McKEE CRK)* *665+61.50 TO 667+88.60*											
(20-21)	675+39.70	TO	675+98.50	LT	OUTLET	58.80	26			11.52		5.58
(20-21)	675+45.60	TO	677+67.00	LT		221.40			221.40			
(21-22)	675+98.50	TO	678+15.60	LT		217.10		4.0		47.17	217.10	
(21-22)	677+57.30	TO	678+15.60	RT	OUTLET	58.30	22			11.08		5.27
(21-22)	677+67.00	TO	683+63.00	(x2)		596.0			1,192.0			
(22)	678+15.60	TO	683+51.00	(x2)		535.40		4.0		232.67	1,070.80	
(22)	683+51.00	TO	683+63.00	RT	INLET	12.0		5.50		3.59		0.93
(22-23)	683+51.00	TO	685+38.00	LT		187.0		4.0		40.63	187.0	
(23)	683+63.00	TO	685+50.00	LT		187.0			187.0			
(23)	685+38.00	TO	685+50.00	LT	INLET	12.0		5.50		3.59		0.93
(24-25)	688+06.30	TO	688+65.40	RT	OUTLET	59.10	23			11.19		5.35
(24-25)	688+06.30	TO	689+51.30	RT		145.0			145.0			
(25-26)	688+65.40	TO	690+04.50	RT		139.10		4.0		30.22	139.10	
(25-26)	689+38.00	TO	690+04.50	LT	OUTLET	66.50	32			12.17		6.06
(25-26)	689+51.30	TO	699+24.00	(x2)		972.70			1,945.40			
(26)	690+04.50	TO	699+12.00	(x2)		907.50		4.0		394.37	1,815.0	
(26)	699+12.00	TO	699+24.00	LT	INLET	12.0		5.50		3.59		0.93
(26-27)	699+12.00	TO	699+50.00	RT		38.0		4.0		8.26	38.0	
(27)	699+24.00	TO	699+62.00	RT		38.0			38.0			
(28)	699+50.00	TO	699+62.00	RT	INLET	12.0		5.50		3.59		0.93
	(BRIDGE OMISSION #2): *SN: 075-0013 (over S FORK MCKEE CRK)* *850+79.90 TO 852+64.10*											
(31-32)	876+20.70	TO	876+66.50	LT		45.80			45.80			
(31-32)	876+14.10	TO	876+70.60	LT	OUTLET	56.50	22			11.08		5.27
(32-33)	876+55.90	TO	877+18.20	RT	OUTLET	62.30	32			12.17		6.06
(32-33)	876+66.50	TO	879+70.00	(x2)		303.50			607.00			
(32-33)	876+70.60	TO	877+18.20	LT		47.60		4.0		10.34	47.60	
(33)	877+18.20	TO	879+58.00	(x2)		239.80		4.0		104.21	479.60	
(33)	879+58.00	TO	879+70.00	RT	INLET	12.0		5.5		3.59		0.93
(33 34)	879+58.00	TO	880+57.00	LT		99.0		4.0		21.51	99.0	
(34)	879+70.00	TO	880+69.00	LT		99.0			99.0			
(34)	880+57.00	TO	880+69.00	LT	INLET	12.0		5.5		3.59		0.93
(35-36)	882+73.00	TO	883+36.80	RT	OUTLET	63.80	22			11.08		5.27
(35-36)	882+85.00	TO	886+70.00	RT		385.0			385.0			
(36)	883+36.80	TO	886+58.00	RT		321.20		4.0		69.79	321.20	
(36)	886+58.00	TO	886+70.00	RT	INLET	12.0		5.5		3.59		0.93
(37-38)	889+17.70	TO	889+72.90	RT	OUTLET	55.20	22			11.08		5.27
(37-38)	889+29.20	TO	890+32.50	RT		103.30			103.30			
(38-39)	889+72.90	TO	890+82.60	RT		109.70		4.0		23.84	109.70	
(38-39)	890+32.50	TO	892+82.00	(x2)		249.50			499.0			
(38-39)	890+26.00	TO	890+82.60	LT	OUTLET	56.60	21			10.97		5.19
(39)	890+82.60	TO	892+70.00	(x2)		187.40		4.0		81.44	374.80	
(39)	892+70.00	TO	892+82.00	LT	INLET	12.0		5.5		3.59		0.93
(40)	892+70.00	TO	897+36.60	RT		466.60		4.0		101.38	466.60	
(40)	892+82.00	TO	897+48.60	RT		466.60			466.60			
(40)	897+36.60	TO	897+48.60	RT	INLET	12.0		5.5		3.59		0.93
(41-42)	975+67.30	TO	977+15.30	RT		148.0			148.0			
(41-42)	975+59.90	TO	976+12.60	RT	OUTLET	52.70	16			10.43		4.79
(42-43)	976+12.60	TO	977+62.10	RT		149.50		4.0		32.48	149.50	
(42-43)	977+07.60	TO	977+62.10	LT	OUTLET	54.50	20			10.86		5.11
(42-43)	977+07.60	TO	983+80.40	(x2)		672.80			1,345.60			
(43)	977+62.10	TO	983+32.40	(x2)		570.30		4.0		247.83	1,140.60	
(43-44)	983+32.40	TO	983+95.90	LT	OUTLET	63.50	13			10.10		4.56
(43-44)	983+32.40	TO	984+23.90	RT		91.50		4.0		19.88	91.50	
(44)	983+95.90	TO	984+89.90	RT		94.0			94.0			
(44-45)	984+23.90	TO	984+89.90	RT	OUTLET	66.00	28			11.73		5.74
	(6-60122-0000) PROJECT TOTAL								7,522	1,644	6,748	78

MODEL: Schedule [Sheet]
FILE NAME: c:\pw_work\pwidot\cabrerars\d0806269\D672307-sht-schedule.dgn

USER NAME = rene.cabrera	DESIGNED - RSC	REVISED -	STATE OF ILLINOIS DEPARTMENT OF TRANSPORTATION
	DRAWN - RSC	REVISED -	
	CHECKED -	REVISED -	
PLOT DATE = 8/14/2025	DATE -	REVISED -	

SCHEDULE OF QUANTITIES

SCALE: NTS | SHEET 1 OF 7 SHEETS | STA. | TO STA.

F.A.P. RTE.	SECTION	COUNTY	TOTAL SHEETS	SHEET NO.
554	34RS-5	PIKE	51	8

CONTRACT NO. 72307

ILLINOIS | FED. AID PROJECT

MILLING SCHEDULE

TYP SEC #	LOCATION (STA TO STA)	LENGTH (FOOT)	WIDTH (FOOT)	(40600982) HMA SURF REM. BUTT JOINT (SQ YD)	(44000155) HMA SURF REMOVAL 1 1/2" (SQ YD)
	[F.A.P. 554 (IL 107)]				
(1-2)	536+00.00 TO 611+18.70	7,518.70	25		20,885.28
(3)	611+18.70 TO 613+10.60	191.90	23.5		501.07
(4)	613+10.60 TO 616+81.40	370.80	22		906.40
(5)	616+81.40 TO 616+92.90	11.50	23.5		30.03
(6)	616+92.90 TO 627+82.90	1,090.0	25		3,027.78
(7)	627+82.90 TO 629+60.80	177.90	23.5		464.52
(8)	629+60.80 TO 636+05.10	644.30	22		1,574.96
(9)	636+05.10 TO 636+83.20	78.10	23.5		203.93
(10-11)	636+83.20 TO 644+06.90	723.7	25		2,010.28
(12)	644+06.90 TO 644+22.20	15.30	23.5		39.95
(13)	644+22.20 TO 647+22.70	300.50	22		734.56
(14)	647+22.70 TO 647+97.00	74.30	23.5		194.01
(15-17)	647+97.00 TO 658+83.99	1,086.99	24		2,898.64
	(HMA Shldrs)				
(17)	657+20.00 TO 657+39.60 LT	19.60	4		8.71
(17)	657+20.00 TO 658+19.80 RT	99.80	4		44.36
	(STA EQN): **658+83.99 (BK) = 659+02.62 (AH)**				
(18)	659+02.62 TO 665+67.40	664.78	24		1,772.75
	(HMA Shldrs)				
(18)	659+90.70 TO 665+67.40 LT	576.70	4		256.31
(18)	660+76.50 TO 665+67.40 RT	490.90	4		218.18
	[F.A.P. 745 (IL 104)]				
	1990+00.00 TO 1993+94.63	394.63	24		1,052.35
	NW Quadrant	A = 1,477.05 SF			164.12
	NE Quadrant	A = 1,692.83 SF			188.09
	SW Quadrant	A = 1,848.68 SF			205.41
	SE Quadrant	A = 1,474.53 SF			163.84
	(HMA Shldrs)				
	1990+00.00 TO 1990+48.70 LT	48.70	4		21.64
	1990+00.00 TO 1991+09.00 RT	109.0	4		48.44
	NW Quadrant	A = 672.47 SF			74.72
	NE Quadrant	A = 669.67 SF			74.41
	SW Quadrant	A = 692.17 SF			76.91
	SE Quadrant	A = 672.14 SF			74.68
	1992+74.90 TO 1993+94.63 LT	119.73	4		53.21
	1993+37.90 TO 1993+94.63 RT	56.73	4		25.21
	***[F.A.P. 554 (IL 107)]* (cont)**				
	(BRIDGE OMISSION #1): ***SN: 075-0012*** *(over MIDDLE FORK MCKEE CRK)* ***665+67.40 TO 667+96.00***				
(19-20)	667+96.00 TO 675+62.10	766.10	24		2,042.93
	(HMA Shldrs)				
(20)	667+96.00 TO 671+23.40 LT	327.40	4		145.51
(20)	667+96.00 TO 671+70.40 RT	374.40	4		166.40
(21)	675+62.10 TO 677+79.60	217.50	23		555.83
(22)	677+79.60 TO 683+63.00	583.40	22		1,426.09
(23)	683+63.00 TO 685+50.00	187.0	23		477.89
(24)	685+50.00 TO 688+29.40	279.4	24		745.07
(25)	688+29.40 TO 689+68.50	139.10	23		355.48
(26)	689+68.50 TO 699+24.00	955.50	22		2,335.67
	SUBTOTAL (pg1)			**0**	**46,245.59**

MILLING SCHEDULE (cont.)

TYP SEC #	LOCATION (STA TO STA)	LENGTH (FOOT)	WIDTH (FOOT)	(40600982) HMA SURF REM. BUTT JOINT (SQ YD)	(44000155) HMA SURF REMOVAL 1 1/2" (SQ YD)
	[F.A.P. 554 (IL 107)]				
(27)	699+24.00 TO 699+62.00	38.0	23		97.11
(28)	699+62.00 TO 848+65.40	14,903.40	24		39,742.40
(29)	848+65.40 TO 849+60.90	95.50	23		244.06
(29)	849+60.90 TO 850+75.50	114.60	22		280.13
	(HMA Shldrs)				
(29)	848+65.40 TO 850+75.50	210.10	6		140.07
(29)	849+60.90 TO 850+75.50	114.60	6		76.40
	(BRIDGE OMISSION #2): ***SN: 075-0013*** *(over S FORK MCKEE CRK)* ***850+75.50 TO 852+61.40***				
	(HMA Shldrs)				
(30)	852+61.40 TO 853+95.30 RT	133.90	6		89.27
(30)	852+61.40 TO 854+82.20 LT	220.80	6		147.20
(30)	852+61.40 TO 853+95.30	133.90	22		327.31
(30)	853+95.30 TO 854+82.20	86.90	23		222.08
(31)	854+82.20 TO 876+34.60	2,152.40	24		5,739.73
(32)	876+34.60 TO 876+82.20	47.60	23		121.64
(33)	876+82.20 TO 879+70.00	287.80	22		703.51
(34)	879+70.00 TO 880+69.00	99.0	23		253.00
(35)	880+69.00 TO 883+00.80	231.80	24		618.13
(36)	883+00.80 TO 886+70.00	369.20	23		943.51
(37)	886+70.00 TO 889+36.90	266.90	24		711.73
(38)	889+36.90 TO 890+46.60	109.70	23		280.34
(39)	890+46.60 TO 892+82.00	235.40	22		575.42
(40)	892+82.00 TO 897+48.60	466.60	23		1,192.42
(41)	897+48.60 TO 975+76.60	7,828.0	24		20,874.67
(42)	975+76.60 TO 977+26.10	149.50	23		382.06
(43)	977+26.10 TO 983+80.40	654.30	22		1,599.40
(44)	983+80.40 TO 984+59.90	79.50	23		203.17
(45)	984+59.90 TO 1020+54.00	3,594.10	24		9,584.27
	INCIDENTAL HMA SURFACING				
	HMA ENTR			1,372.68	
	SIDE RDS			1,276.00	
	SUBTOTAL (pg2)			**2,648.68**	**85,149.03**
	(6-60122-0000) PROJECT TOTAL			**2,649**	**131,395**

MODEL: Schedule-1 [Sheet]
FILE NAME: c:\pw_work\pwidot\cabrerars\d0806269\D672307-sht-schedule.dgn

USER NAME = rene.cabrera	DESIGNED - RSC	REVISED -	
	DRAWN - RSC	REVISED -	
	CHECKED -	REVISED -	
PLOT DATE = 8/15/2025	DATE -	REVISED -	

STATE OF ILLINOIS
DEPARTMENT OF TRANSPORTATION

SCHEDULE OF QUANTITIES

SCALE: NTS | SHEET 2 OF 7 SHEETS | STA. TO STA.

F.A.P. RTE.	SECTION	COUNTY	TOTAL SHEETS	SHEET NO.
554	34RS-5	PIKE	51	9

CONTRACT NO. 72307

ILLINOIS | FED. AID PROJECT

TEMPORARY RAMP

LOCATION (STA TO STA)	LENGTH (FOOT)	WIDTH (FOOT)	(40600990) QUANTITY (SQ YD)
(After Milling):			
[F.A.P. 554 (IL 107)]			
536+00.00 TO 536+05.00	5.0	25	13.89
(STA EQN): ***658+83.99 (BK) = 658+83.99 (AH)***			
[F.A.P. 745 (IL 104)]			
1990+00.00 TO 1990+05.00	5.0	24	13.33
1993+89.63 TO 1993+94.63	5.0	24	13.33
[F.A.P. 554 (IL 107)] (cont.)			
665+62.40 TO 665+67.40	5.0	24	13.33
(BRIDGE OMISSION #1): ***SN: 075-0012*** *(over MIDDLE FORK MCKEE CRK)* ***665+67.40 TO 667+96.00***			
667+96.00 TO 668+01.00	5.0	24	13.33
850+70.50 TO 850+75.50	5.0	22	12.22
(BRIDGE OMISSION #2): ***SN: 075-0013*** *(over S FORK MCKEE CRK)* ***850+75.50 TO 852+61.40***			
852+61.40 TO 852+66.40	5.0	22	12.22
1020+49.00 TO 1020+54.00	5.0	24	13.33
(6-60122-0000) PROJECT TOTAL			**105**

PAVEMENT SCHEDULE

TYP SEC #	LOCATION (STA TO STA)	LENGTH (FOOT)	WIDTH (FOOT)	BIND THICK (INCH)	SHLDR AREA (SQ FT)	SHLDR THICK (INCH)	(40604150) P HMA SC IL-9.5 "C" N50 (TON)	(40600370) LONG JOINT SEALANT (FOOT)	(40602965) HMA BC IL-9.5FG N50 (TON)	(48203023) HMA SHLDRS 6 1/2" (SQ YD)	(48203100) HMA SHLDRS (TON)	(40600290) BIT MATLS TACK CT MILLING (POUND)	LIFTS (POUND)
	[F.A.P. 554 (IL 107)]												
(1)	536+00.00 TO 536+25.00	25.0	25	0.625					2.43			31.25	
(1-2)	536+00.00 TO 611+18.70	7,518.70	25				1,754.36						4,699.19
(1-15)	536+00.00 TO 658+83.99	12,283.99						12,283.99					
(1)	536+25.00 TO 610+50.00	7,425.0	25	1.25					1,443.75			9,281.25	
(1)	610+50.00 TO 610+75.00	25.0	25	0.625					2.43			31.25	
(3)	611+18.70 TO 613+10.60	191.90	23.5				42.09						112.74
(4)	613+10.60 TO 616+81.40	370.80	22				76.14						203.94
(5)	616+81.40 TO 616+92.90	11.50	23.5				2.52						6.76
(6)	616+92.90 TO 627+82.90	1,090.0	25				254.33						681.25
(7)	627+82.90 TO 629+60.80	177.90	23.5				39.02						104.52
(8)	629+60.80 TO 636+05.10	644.30	22				132.30						354.36
(9)	636+05.10 TO 636+83.20	78.10	23.5				17.13						45.88
(10)	636+83.20 TO 639+96.20 RT	313.0	4		1,252.0	1.5				139.11	11.69		93.90
(10)	639+43.90 TO 642+43.90 LT	300.0	4		1,200.0	1.5				133.33	11.20		90.00
(10-11)	636+83.20 TO 644+06.90	723.70	25				168.86						452.31
(12)	644+06.90 TO 644+22.20	15.30	23.5				3.36						8.99
(13)	644+22.20 TO 647+22.70	300.50	22				61.70						165.28
(14)	647+22.70 TO 647+97.00	74.30	23.5				16.30						43.65
(15-17)	647+97.00 TO 658+83.99	1,086.99	24				243.49						652.19
(16)	648+25.00 TO 648+50.00	25.0	24	0.625					2.33			30.0	
(16-17)	648+50.00 TO 658+83.99	1,034.0	24	1.25					193.01			1,240.79	
(17)	657+20.00 TO 657+39.60 LT	19.60	4		78.40	2.75					1.34	3.92	1.96
(17)	657+20.00 TO 658+19.80 RT	99.80	4		399.20	2.75					6.83	19.96	9.98
	(STA EQN): ***658+83.99 (BK) = 659+02.62 (AH)***												
(18)	659+02.62 TO 665+42.40	639.78	24	1.25					119.43			767.74	
(18)	659+02.62 TO 665+67.40	664.78	24				148.91	664.78					398.87
(18)	659+90.70 TO 665+42.40 LT	551.70	4		2,206.80	2.75					37.76	110.34	55.17
(18)	660+76.50 TO 665+42.40 RT	465.90	4		1,863.60	2.75					31.89	93.18	46.59
	665+42.40 TO 665+67.40	25.0	24	0.625					2.33			30.0	
	665+42.40 TO 665+67.40	25.0	8		200.00	2.125					2.64	10.0	5.0
	[F.A.P. 745 (IL 104)]												
	1990+00.00 TO 1990+25.00	25.0	24	0.625	200.0	2.125			2.33		2.64	30.0	
	1990+00.00 TO 1993+94.63	394.63	24				88.40	394.63					236.78
	1990+25.00 TO 1990+48.70 LT	23.70	4		94.80	2.75					1.62	4.74	2.37
	1990+25.00 TO 1991+09.00 RT	84.0	4		336.0	2.75					5.75	16.80	8.40
	1990+25.00 TO 1993+69.63	344.63	24	1.25					64.33			413.56	
	1992+74.90 TO 1993+69.63 LT	94.73	4	1.25	378.92	2.75					6.48	18.95	9.47
	1993+37.90 TO 1993+69.63 RT	31.73	4	1.25	126.92	2.75					2.17	6.35	3.17
	1993+69.63 TO 1993+94.63	25.0	24	0.625	200.0	2.125			2.33		2.64	30.0	
	NW Quad	A = 1,477.05 SF		1.25	672.47	2.75	13.79		11.49		11.51	107.48	70.55
	NE Quad	A = 1,692.83 SF		1.25	669.67	2.75	15.80		13.17		11.46	118.13	75.80
	SW Quad	A = 1,848.68 SF		1.25	692.17	2.75	17.25		14.38		11.84	127.04	80.83
	SE Quad	A = 1,474.53 SF		1.25	672.14	2.75	13.76		11.47		11.50	107.33	70.47
	[F.A.P. 554 (IL 107)] (cont.)												
	(BRIDGE OMISSION #1): ***SN: 075-0012*** *(over MIDDLE FORK MCKEE CRK)* ***665+67.40 TO 667+96.00***												
	667+96.00 TO 668+21.00	25.0	24	0.625					2.33			30.0	
	667+96.00 TO 668+21.00	25.0	8		200.0	2.125					2.64	10.0	5.0
(19-20)	667+96.00 TO 675+62.10	766.10	24				171.61						459.66
(19-29)	667+96.00 TO 850+75.50	18,279.50						18,279.50					
(19)	668+21.00 TO 671+23.40 RT	302.40	4		1,209.60	2.75					20.70	60.48	30.24
(19)	668+21.00 TO 671+70.40 LT	349.40	4		1,397.60	2.75					23.91	69.88	34.94
(19-20)	668+21.00 TO 675+62.10	741.10	24	1.25					138.34			889.32	
(21)	675+62.10 TO 677+79.60	217.50	23	1.25			46.69		38.91			250.13	125.06
(22)	677+79.60 TO 683+63.00	583.40	22	1.25			119.79		99.83			641.74	320.87
(23)	683+63.00 TO 685+50.00	187.0	23	1.25			40.14		33.45			215.05	107.53
(24)	685+50.00 TO 688+29.40	279.40	24	1.25			62.59		52.15			335.28	167.64
(25)	688+29.40 TO 689+68.50	139.10	23	1.25			29.86		24.88			159.97	79.98
(26)	689+68.50 TO 699+24.00	955.50	22	1.25			196.20		163.50			1,051.05	525.53
(27)	699+24.00 TO 699+62.00	38.0	23	1.25			8.16		6.80			43.70	21.85
(28)	699+62.00 TO 848+65.40	14,903.40	24	1.25			3,338.36		2,781.97			17,884.08	8,942.04
(29)	848+65.40 TO 849+60.90	95.50	23	1.25			20.50		17.08			109.83	54.91
(29)	848+65.40 TO 850+50.50 RT	185.10	6		1,110.60	2.75					19.0	55.53	27.77
												34,561.50	19,769.86
	SUBTOTAL **(pg 1)**						**7,143.40**	**31,622.90**	**5,244.46**	**272.44**	**237.24**	**54,331.36**	

MODEL: Schedule-2 [Sheet]
FILE NAME: c:\pw_work\pwidot\cabrerarsid\d0805269\D672307-sht-schedule.dgn

USER NAME = rene.cabrera	DESIGNED - RSC	REVISED -	
	DRAWN - RSC	REVISED -	
	CHECKED -	REVISED -	
PLOT DATE = 8/15/2025	DATE -	REVISED -	

STATE OF ILLINOIS
DEPARTMENT OF TRANSPORTATION

SCHEDULE OF QUANTITIES

SCALE: NTS | SHEET 3 OF 7 SHEETS | STA. TO STA.

F.A.P. RTE.	SECTION	COUNTY	TOTAL SHEETS	SHEET NO.
554	34RS-5	PIKE	51	10
		CONTRACT NO. 72307		
		ILLINOIS FED. AID PROJECT		

AGGREGATE WEDGE SHOULDER, TYPE B

TYP. SEC. #	LOCATION (STA TO STA) (T_{AVG} = 1.5") (W = 4') Coef. = 1.6 TONS / CU YD				LENGTH (FOOT)	WIDTH (FOOT)	(48102100) QUANTITY (TON)
	[F.A.P. 554 (IL 107)]						
(1-2)	536+00.00	TO	611+18.70		7,518.70	8	445.55
(3)	611+18.70	TO	613+10.60	RT	191.90	4	5.69
(5)	616+81.40	TO	616+92.90	LT	11.50	4	0.34
(6)	616+92.90	TO	627+82.90		1,090.0	8	64.59
(7)	627+82.90	TO	629+60.80	LT	177.90	4	5.27
(9)	636+05.10	TO	636+83.20	LT	78.10	4	2.31
(10-11)	636+83.20	TO	644+06.90		723.70	8	42.89
(12)	644+06.90	TO	644+22.20	RT	15.30	4	0.45
(14)	647+22.70	TO	647+97.00	LT	74.30	4	2.20
(15-16)	647+97.00	TO	657+20.00		923.0	8	54.70
(17)	657+20.00	TO	657+39.60	LT	19.60	4	0.58
(17)	657+20.00	TO	658+19.80	RT	99.80	4	2.96
	(STA EQN): **658+83.99 (BK) = 659+02.62 (AH)**						
(18)	659+90.70	TO	660+76.50	LT	85.80	4	2.54
(18)	660+76.50	TO	665+97.40		520.90	8	30.87
	[F.A.P. 745 (IL 104)]						
	1990+00.00	TO	1990+47.80	LT	47.80	4	1.42
	1990+47.80	TO	1991+09.00	RT	61.20	4	1.81
	NW Quadrant				A = 649.20 SF		4.81
	NE Quadrant				A = 642.67 SF		4.76
	SW Quadrant				A = 665.18 SF		4.93
	SE Quadrant				A = 648.87 SF		4.81
	1992+74.90	TO	1993+37.90	LT	63.0	4	1.87
	1993+37.90	TO	1993+94.63		56.73	8	3.36
	***[F.A.P. 554 (IL 107)]* (cont.)**						
	(BRIDGE OMISSION #1): ***SN: 075-0012*** *(over MIDDLE FORK McKEE CRK)* ***665+61.50 TO 667+88.60***						
(19-20)	667+66.00	TO	675+62.10		796.10	8	47.18
(21)	675+62.10	TO	677+79.60	RT	217.50	4	6.44
(23)	683+63.00	TO	685+50.00	RT	187.0	4	5.54
(25)	685+50.00	TO	688+29.40		279.40	8	16.56
(25)	688+29.40	TO	689+68.50	LT	139.10	4	4.12
(28)	699+62.00	TO	848+65.40		14,903.40	8	883.16
(29)	848+65.40	TO	849+60.90	LT	95.50	4	2.83
	(BRIDGE OMISSION #2): ***SN: 075-0013*** *(over S FORK MCKEE CRK)* ***850+75.50 TO 852+61.40***						
(30)	853+95.30	TO	854+82.20	RT	86.90	4	2.57
(31)	854+82.20	TO	876+34.60		2,152.40	8	127.55
(32)	876+34.60	TO	876+82.20	RT	47.60	4	1.41
(34)	879+70.00	TO	880+69.00	RT	99.0	4	2.93
(35)	880+69.00	TO	883+00.80		231.80	8	13.74
(36)	883+00.80	TO	886+70.00	LT	369.20	4	10.94
(37)	886+70.00	TO	889+36.60		266.60	8	15.80
(38)	889+36.60	TO	890+46.60	LT	110.0	4	3.26
(40)	892+82.00	TO	897+48.60	LT	466.60	4	13.83
(41)	897+48.60	TO	975+76.60		7,828.00	8	463.88
(42)	975+76.60	TO	977+26.10	LT	149.50	4	4.43
(45)	984+59.90	TO	1020+54.00		3,594.10	8	212.98
	(6-60122-0000) PROJECT TOTAL						**2,528**

PAVEMENT SCHEDULE (cont.)

TYP SEC #	LOCATION (STA TO STA)				LENGTH (FOOT)	WIDTH (FOOT)	BIND THICK (INCH)	SHLDR AREA (SQ FT)	SHLDR THICK (INCH)	(40604150) P HMA SC IL-9.5 "C" N50 (TON)	(40600370) LONG JOINT SEALANT (FOOT)	(40602965) HMA BC IL-9.5FG N50 (TON)	(48203023) HMA SHLDRS 6 1/2" (SQ YD)	(48203100) HMA SHLDRS (TON)	(40600290) BIT MATLS TACK CT MILLING (POUND)	LIFTS (POUND)
	***[F.A.P. 554 (IL 107)]* (cont.)**															
(29)	849+60.90	TO	850+50.50		89.60	22	1.25					15.33			98.56	
(29)	849+60.90	TO	850+50.50	LT	89.60	6		537.60	2.75					9.20	26.88	13.44
(29)	849+60.90	TO	850+75.50		114.60	22				23.53						63.03
	850+50.50	TO	850+75.50		25.0	22	0.625					2.14			27.50	
	850+50.50	TO	850+75.50		25.0	12		300.0	2.125					3.97	15.0	7.50
	(BRIDGE OMISSION #2): ***SN: 075-0013*** *(over S FORK MCKEE CRK)* ***850+75.50 TO 852+61.40***															
	852+61.40	TO	852+86.40		25.0	22	0.625					2.14			27.50	
	852+61.40	TO	852+86.40		25.0	12		300.0	2.125					3.97	15.0	7.50
(30)	852+61.40	TO	853+95.30		133.90	22				27.49						73.65
(30-45)	852+61.40	TO	1020+54.00		16,792.60						16,792.60					
(30)	852+86.40	TO	853+95.30	RT	108.90	6		653.40	2.75					11.10	32.67	16.34
(30)	852+86.40	TO	854+82.20	LT	195.80	6		1,174.80	2.75					20.10	58.74	29.37
(30)	852+86.40	TO	853+95.30		108.90	22	1.25					18.63			119.79	
(30)	853+95.30	TO	854+82.20		86.90	23	1.25			18.65		15.55			99.93	49.97
(31)	854+82.20	TO	876+34.60		2,152.40	24	1.25			482.14		401.78			2,582.88	1,291.44
(32)	876+34.60	TO	876+82.20		47.60	23	1.25			10.22		8.52			54.74	27.37
(33)	876+82.20	TO	879+70.00		287.80	22	1.25			59.09		49.25			316.58	158.29
(34)	879+70.00	TO	880+69.00		99.0	23	1.25			21.25		17.71			113.85	56.93
(35)	880+69.00	TO	883+00.80		231.80	24	1.25			51.92		43.27			278.16	139.08
(36)	883+00.80	TO	886+70.00		369.20	23	1.25			79.25		66.05			424.58	212.29
(37)	886+70.00	TO	889+36.90		266.90	24	1.25			59.79		49.82			320.28	160.14
(38)	889+36.90	TO	890+46.60		109.70	23	1.25			23.55		19.62			126.16	63.08
(39)	890+46.60	TO	892+82.00		235.40	22	1.25			48.34		40.28			258.94	129.47
(40)	892+82.00	TO	897+48.60		466.60	23	1.25			100.16		83.47			536.59	268.30
(41)	897+48.60	TO	975+76.60		7,828.0	24	1.25			1,753.47		1,461.23			9,393.60	4,696.80
(42)	975+76.60	TO	977+26.10		149.50	23	1.25			32.09		26.74			171.93	85.96
(43)	977+26.10	TO	983+80.40		654.30	22	1.25			134.35		111.96			719.73	359.86
(44)	983+80.40	TO	984+59.90		79.50	23	1.25			17.07		14.22			91.43	45.71
(45)	984+59.90	TO	1020+54.00		3,594.10	24	1.25			805.08		670.90			4,312.92	2,156.46
															20,223.93	10,111.97
	***SUBTOTAL* (pg 2)**									**3,747.45**	**16,792.60**	**3,118.60**	**0.00**	**48.41**	**30,335.90**	
															54,659.99	29,805.35
	(6-60122-0000) PROJECT TOTAL									**10,891**	**48,416**	**8,363**	**273**	**286**	**84,466**	

MODEL: Schedule-3 [Sheet]
FILE NAME: c:\pw_work\pwidot\cabrerars\d0806269\D672307-sht-schedule.dgn

USER NAME = rene.cabrera	DESIGNED - RSC	REVISED -	
	DRAWN - RSC	REVISED -	
	CHECKED -	REVISED -	
PLOT DATE = 9/4/2025	DATE -	REVISED -	

STATE OF ILLINOIS
DEPARTMENT OF TRANSPORTATION

SCHEDULE OF QUANTITIES

SCALE: NTS | SHEET 4 OF 7 SHEETS | STA. TO STA.

F.A.P. RTE.	SECTION	COUNTY	TOTAL SHEETS	SHEET NO.
554	34RS-5	PIKE	51	11

CONTRACT NO. 72307

ILLINOIS | FED. AID PROJECT

PAVEMENT MARKING SCHEDULE

TYP SEC #	(STA TO STA)	LENGTH	(78009005) MOD URETH PM LINE 5 YELLOW SOLID	YELLOW SKIP-DASH	YELLOW DBL-SOLID	WHITE SOLID	(78004720) PR PL PM TD STAND L24 WHITE SOLID	(78011125) GRV RCSD PVT MRKG 24	(78100100) RAISED REFL PAVT MRK	(78300200) RAISED REFL PVT MK REM	(70300100) SHORT-TERM PAVT MKING (3 APPL)	(70300150) SHRT-TRM PAVT MK REM
		(FOOT)	(FOOT)	(FOOT)	(FOOT)	(FOOT)	(FOOT)	(FOOT)	(EACH)	(EACH)	(FOOT)	(SQ FT)
	[F.A.P. 554 (IL 107)]											
(1)	536+00.00 TO 541+90.00	590.0		147.50								
(1-17)	536+00.00 TO 657+39.60	12,139.60				24,279.20						
(1-17)	536+00.00 TO 658+57.50	12,257.50							154	154	1,225.75	408.58
(1)	541+90.00 TO 553+00.00 LT	1,110.0		277.50								
(1)	541+90.00 TO 553+00.00 RT	1,110.0	1,110.0									
(1)	553+00.00 TO 564+40.00	1,140.0			2,280.0							
(1)	564+40.00 TO 574+60.00 LT	1,020.0	1,020.0									
(1)	564+40.00 TO 574+60.00 RT	1,020.0		255.0								
(1)	574+60.00 TO 605+00.00	3,040.0		760.0								
(1-3)	605+00.00 TO 611+80.00 LT	680.0		170.0								
(1-3)	605+00.00 TO 611+80.00 RT	680.0	680.0									
(3-17)	611+80.00 TO 658+57.50	4,677.50			9,355.0							
(17)	657+39.60 TO 658+19.80 RT	80.20				80.20						
(17)	658+57.50 RT						21.60	21.60				
	(STA EQN): **658+83.99 (BK) = 659+02.62 (AH)**											
(18)	659+50.80 LT						22.50	22.50				
(18)	659+50.80 TO 660+80.00	129.20			258.40							
(18)	659+50.80 TO 665+67.40	616.60							9	9	61.66	20.55
(18)	659+90.70 TO 660+76.50 LT	85.80				85.80						
(18)	660+76.50 TO 665+67.40	490.9				981.8						
(18)	660+80.00 TO 665+67.40	487.40		121.85								
	[F.A.P. 745 (IL 104)]											
	1990+00.00 TO 1990+47.80	47.80				95.60						
	1990+00.00 TO 1991+37.00	137.0			274.0				3	3	13.70	4.57
	1990+47.80 TO 1991+09.00 RT	61.20				61.20						
	1991+37.00 RT						17.90	17.90				
	1992+49.90 LT						16.50	16.50				
	1992+74.90 TO 1993+37.90 LT	63.0				63.0						
	1993+37.90 TO 1993+94.63	56.73				113.46						
	1992+49.90 TO 1993+94.63	144.73			289.46				3	3	14.47	4.82
	(IL 104 Intrsctn) NW Quad	171.03				171.03						
	NE Quad	170.79				170.79						
	SW Quad	176.42				176.42						
	SE Quad	170.94				170.94						
	[F.A.P. 554 (IL 107)] **(cont.)**											
	(BRIDGE OMISSION #1): **SN: 075-0012** *(over MIDDLE FORK McKEE CRK)* **665+67.40 TO 667+96.00**	228.60	228.60	57.15		457.20						
(19-24)	667+96.00 TO 685+90.00	1,794.00		448.50								
(19-29)	667+96.00 TO 850+75.50	18,279.50				36,559.0			230	230	1,827.95	609.32
(24-26)	685+90.00 TO 697+00.00 LT	1,110.0		277.50								
(24-26)	685+90.00 TO 697+00.00 RT	1,110.0	1,110.0									
(24-26)	697+00.00 TO 701+00.00	400.0			800.0							
(26)	701+00.00 TO 709+50.00 LT	850.0	850.0									
(26)	701+00.00 TO 709+50.00 RT	850.0		212.50								
(26)	709+50.00 TO 715+00.00	550.0		137.50								
(26)	715+00.00 TO 724+00.00 LT	900.0		225.0								
(26)	715+00.00 TO 724+00.00 RT	900.0	900.0									
(26)	724+00.00 TO 731+20.00	720.0			1,440.0							
(26)	731+20.00 TO 741+00.00 LT	980.0	980.0									
(26)	731+20.00 TO 741+00.00 RT	980.0		245.0								
(26)	741+00.00 TO 778+80.00	3,780.0		945.0								
(26)	778+80.00 TO 789+00.00 LT	1,020.0		255.0								
(26)	778+80.00 TO 789+00.00 RT	1,020.0	1,020.0									
(26)	789+00.00 TO 808+30.00	1,930.0			3,860.0							
(26)	808+30.00 TO 820+10.00 LT	1,180.0		295.0								
(26)	808+30.00 TO 820+10.00 RT	1,180.0	1,180.0									
(26)	820+10.00 TO 830+00.00 LT	990.0	990.0									
(26)	820+10.00 TO 830+00.00 RT	990.0		247.50								
(28-29)	830+00.00 TO 850+75.50	2,075.50		518.88								
	(BRIDGE OMISSION #2): **SN: 075-0013** *(over S FORK McKEE CRK)* **850+75.50 TO 852+61.40**	185.90		46.47		371.80						
(30-39)	852+61.40 TO 891+90.00	3,928.60		982.15								
(30-45)	852+61.40 TO 1020+54.00	16,792.60				33,585.20			211	211	1,679.26	559.75
(39-41)	891+90.00 TO 900+80.00 LT	890.0		222.50								
(39-41)	891+90.00 TO 900+80.00 RT	890.0	890.0									
(41)	900+80.00 TO 905+90.00	510.0			1,020.0							
(41)	905+90.00 TO 915+90.00 LT	1,000.0	1,000.0									
(41)	905+90.00 TO 915+90.00 RT	1,000.0		250.0								
(41)	915+90.00 TO 942+70.00	2,680.0		670.0								
(41)	942+70.00 TO 950+10.00 LT	740.0		185.0								
(41)	942+70.00 TO 950+10.00 RT	740.0	740.0									
(41)	950+10.00 TO 952+20.00	210.0		52.50								
(41)	952+20.00 TO 959+20.00 LT	700.0	700.0									
(41)	952+20.00 TO 959+20.00 RT	700.0		175.0								
(41)	959+20.00 TO 968+00.00	880.0		220.0								
	SUBTOTALS **(pg 1)**		**13,398.60**	**8,400.0**	**19,576.86**	**97,422.64**	**78.50**	**78.50**	**610**	**610**	**4,822.79**	**1,607.60**

PAVEMENT MARKING SCHEDULE (cont.)

TYP SEC #	(STA TO STA)	LENGTH	(78009005) MOD URETH PM LINE 5 YELLOW SOLID	YELLOW SKIP-DASH	YELLOW DBL-SOLID	WHITE SOLID	(78004720) PR PL PM TD STAND L24 WHITE SOLID	(78011125) GRV RCSD PVT MRKG 24	(78100100) RAISED REFL PAVT MRK	(78300200) RAISED REFL PVT MK REM	(70300100) SHORT-TERM PAVT MKING (3 APPL)	(70300150) SHRT-TRM PAVT MK REM
		(FOOT)	(FOOT)	(FOOT)	(FOOT)	(FOOT)	(FOOT)	(FOOT)	(EACH)	(EACH)	(FOOT)	(SQ FT)
	[F.A.P. 554 (IL 107)]											
(41-43)	968+00.00 TO 978+30.00 LT	1,030.0		257.50								
(41-43)	968+00.00 TO 978+30.00 RT	1,030.0	1,030.0									
(43)	978+30.00 TO 980+20.00	190.00			380.0							
(43-45)	980+20.00 TO 991+50.00 LT	1,130.0	1,130.0									
(43-45)	980+20.00 TO 991+50.00 RT	1,130.0		282.50								
(45)	991+50.00 TO 994+30.00	280.0		70.0								
(45)	994+30.00 TO 1004+80.00 LT	1,050.0		262.50								
(45)	994+30.00 TO 1004+80.00 RT	1,050.0	1,050.0									
(45)	1004+80.00 TO 1011+63.00 LT	683.0	683.0									
(45)	1004+80.00 TO **1011+63.00** RT	683.0		170.75								
	(CORPORATE LIMITS)											
	1011+63.00 TO 1013+40.00 LT		177.0									
(45)	**1011+63.00** TO 1013+40.00 RT	177.0		44.25								
(45)	1013+40.00 TO 1020+54.00	714.0		178.50								
	SUBTOTALS **(pg 2)**		**4,070.0**	**1,266.0**	**380.0**	**0.0**						
	SUBTOTALS		**17,468.60**	**9,666.00**	**19,956.86**	**97,422.64**					**4,822.79**	
											(3 Applications)	
	(6-60122-0000) PROJECT TOTAL		**144,515**				**79**	**79**	**610**	**610**	**14,469**	**1,608**

SEEDING SCHEDULE

TYP SEC #	LOCATION (STA TO STA)	LENGTH	WIDTH	(25000200) SEEDING CL 2	(25000400) NITROGEN FERT NUTR	(25000500) PHOSPHORUS FERT NUTR	(25000600) POTASSIUM FERT NUTR	(25000700) AGR GROUND LIMESTONE	(25100115) MULCH METHOD 2	(28000250) TEMP EROS CONTR SEED
		(FOOT)	(FOOT)	(ACRE)	(POUND)	(POUND)	(POUND)	(TON)	(ACRE)	(POUND)
	[F.A.P. 554 (IL 107)]									
	(STA EQN): ***658+83.99 (BK) = 658+83.99 (AH)***									
	(BRIDGE OMISSION #1): ***SN: 075-0012*** *(over MIDDLE FORK MCKEE CRK)* ***665+67.40 TO 667+96.00***									
(20)	675+37.10 TO 675+62.10 LT	25.0	2.50	0.00143	0.13	0.13	0.13	0.00287	0.00143	0.14348
(21-23)	675+62.10 TO 685+50.00 LT	987.90	5.0	0.11340	10.21	10.21	10.21	0.22679	0.11340	11.33953
(21)	677+54.60 TO 677+79.60 RT	25.0	2.50	0.00143	0.13	0.13	0.13	0.00287	0.00143	0.14348
(21-23)	677+79.60 TO 685+50.00 RT	770.40	5.0	0.08843	7.96	7.96	7.96	0.17686	0.08843	8.84298
(24)	685+50.00 TO 685+75.00 RT	25.0	2.50	0.00143	0.13	0.13	0.13	0.00287	0.00143	0.14348
(24)	688+04.40 TO 688+29.40 RT	25.0	2.50	0.00143	0.13	0.13	0.13	0.00287	0.00143	0.14348
(25-27)	688+29.40 TO 699+62.00 RT	1,132.60	5.0	0.13000	11.70	11.70	11.70	0.26001	0.13000	13.00046
(28)	699+62.00 TO 699+87.00 RT	25.0	2.50	0.00143	0.13	0.13	0.13	0.00287	0.00143	0.14348
	(BRIDGE OMISSION #2): ***SN: 075-0013*** *(over S FORK MCKEE CRK)* ***850+75.50 TO 852+61.40***									
(31)	876+09.60 TO 876+34.60 LT	25.0	2.50	0.00143	0.13	0.13	0.13	0.00287	0.00143	0.14348
(32-34)	876+34.60 TO 880+69.00 LT	434.40	10.0	0.09972	8.98	8.98	8.98	0.19945	0.09972	9.97245
(35)	880+69.00 TO 880+94.00 RT	25.0	2.50	0.00143	0.13	0.13	0.13	0.00287	0.00143	0.14348
(35)	882+75.80 TO 883+00.80 RT	25.0	2.50	0.00143	0.13	0.13	0.13	0.00287	0.00143	0.14348
(36)	883+00.80 TO 886+70.00 RT	369.20	5.0	0.04238	3.81	3.81	3.81	0.08476	0.04238	4.23783
(37)	886+70.00 TO 886+95.00 RT	25.0	2.50	0.00143	0.13	0.13	0.13	0.00287	0.00143	0.14348
(37)	889+11.90 TO 889+36.90 RT	25.0	2.50	0.00143	0.13	0.13	0.13	0.00287	0.00143	0.14348
(38-40)	889+36.90 TO 897+48.60 RT	811.70	5.0	0.09317	8.39	8.39	8.39	0.18634	0.09317	9.31703
(41)	897+48.60 TO 897+73.60 RT	25.0	2.50	0.00143	0.13	0.13	0.13	0.00287	0.00143	0.14348
(41)	975+51.60 TO 975+76.60 RT	25.0	2.50	0.00143	0.13	0.13	0.13	0.00287	0.00143	0.14348
(42-44)	975+76.60 TO 984+59.90 RT	883.30	5.0	0.10139	9.12	9.12	9.12	0.20278	0.10139	10.13889
(45)	984+59.90 TO 984+84.90 RT	25.0	2.50	0.00143	0.13	0.13	0.13	0.00287	0.00143	0.14348
	(6-60122-0000) PROJECT TOTAL			**0.75**	**62**	**62**	**62**	**1.4**	**0.75**	**75**

MODEL: Schedule-4 [Sheet]
FILE NAME: c:\pw_work\pwidot\cabrerars\d0806269\D672307-sht-schedule.dgn

USER NAME = rene.cabrera	DESIGNED - RSC	REVISED -	**STATE OF ILLINOIS DEPARTMENT OF TRANSPORTATION**
	DRAWN - RSC	REVISED -	
	CHECKED -	REVISED -	
PLOT DATE = 8/15/2025	DATE -	REVISED -	

SCHEDULE OF QUANTITIES

SCALE: NTS | SHEET 5 OF 7 SHEETS | STA. TO STA.

F.A.P. RTE.	SECTION	COUNTY	TOTAL SHEETS	SHEET NO.
554	34RS-5	PIKE	51	12
		CONTRACT NO. 72307		
		ILLINOIS FED. AID PROJECT		

INCIDENTAL HOT-MIX ASPHALT SURFACING & AGGREGATE SURFACE COURSE, TYPE B

TYP SEC #	DESCRIPTION	STATION	fr. E.O.P.	WIDTH	THICKNESS	EXIST WIDTH	ENTR. Exist. AGG AREA	ENTR. Exist. AGG TOTAL	ENTR. Exist. BIT AREA	ENTR. Exist. BIT TOTAL	SIDE RD. AREA	SIDE RD. TOTAL	(40800050) INCIDENTAL HMA SURF	(40200800) AGG SURF CSE, TY B	(40800029) BIT MATLS TACK CT	(35800100) PREP OF BASE
			(FOOT)	(FOOT)	(INCH)	(FOOT)	(SQ FT)	(TON)	(SQ FT)	(TON)	(SQ FT)	(TON)	(TON)	(TON)	(POUND)	(SQ YD)
	[F.A.P. 554 (IL 107)]															
	LIMITS OF IMPROVEMENT:	536+00.00														
	SECTION BEGINS	536+25.00														
(1)	CR 830E	538+64.80 (LT)	14	21	2.75 to 1.5						396.99	5.25	5.25		19.85	
(1)	HMA CE	572+81.40 LT	9	21	2.75 to 1.5				270.00	3.57			3.57		13.50	
(1)	HMA MBT	573+84.60 RT	7	20	2.75 to 1.5				294.00	3.89			3.89		14.70	
(1)	TR 3227E	587+16.70 (RT)	20	28	2.75 to 1.5						952.87	12.60	12.60		47.64	
(1)	418th St.	596+24.90 (LT)	15	30	2.75 to 1.5						694.14	9.18	9.18		34.71	
(1)	HMA MBT	606+41.70 RT	7	20	2.75 to 1.5				294.00	3.89			3.89		14.70	
(1)	HMA CE	606+43.40 LT	7	46	2.75 to 1.5	32			404.96	5.35			5.35	1.35	20.25	
	(STA EQN):	658+83.99 (BK)														
		659+02.62 (AH)														
	[BRIDGE OMISSION #1]: S.N.: 075-0012 (over MIDDLE FORK MCKEE CRK)	665+61.50 TO 667+96.00														
(24)	274th Ln	686+71.30 (LT)	12	33	2.75 to 1.5	27					540.00	7.14	7.14	0.44	27.00	
(27)	HMA PE	699+43.80 LT	7	26	2.75 to 1.5	12			231.00	3.05			3.05	0.66	11.55	
(28)	AGG PE	699+93.90 RT	7	50	3.5	36	399.00	8.69					8.69	1.49		44.33
(28)	AGG MBT	699+96.00 LT	7	20	3.5		294.00	6.40					6.40			32.67
(28)	HMA MBT	713+46.20 LT	7	20	2.75 to 1.5				294.00	3.89			3.89		14.70	
(28)	HMA PE	713+47.80 RT	7	15	2.75 to 1.5	10			154.00	2.04			2.04	0.43	7.70	
(28)	HMA PE	719+83.50 RT	7	37	2.75 to 1.5	23			308.00	4.07			4.07	1.04	15.40	
(28)	HMA PE	723+50.80 LT	9	52	2.75 to 1.5	31			549.00	7.26			7.26	1.02	27.45	
(28)	417th St.	730+04.18 (RT)	12	61	2.75 to 1.5						876.00	11.58	11.58		43.80	
(28)	HMA CE	733+83.00 LT	12	37	2.75 to 1.5	33			588.00	7.77			7.77	0.52	29.40	
(28)	HMA PE (w/ MBT) (leading)	734+97.50 RT	7	47	2.75 to 1.5	18			416.50	5.51			5.51	0.95	20.83	
(28)	HMA PE	735+96.90 RT	10	18	2.75 to 1.5	12			280.00	3.70			3.70	0.30	14.00	
(28)	420th St.	742+77.37 (LT)	11	45	2.75 to 1.5						616.00	8.14	8.14		30.80	
(28)	East St.	743+10.67 (RT)	11	40	2.75 to 1.5						561.00	7.42	7.42		28.05	
(28)	HMA PE	745+10.20 RT	7	19	2.75 to 1.5	12			182.00	2.41			2.41	0.54	9.10	
(28)	HMA CE	754+57.40 RT	12	37	2.75 to 1.5	31			588.00	7.77			7.77	0.50	29.40	
(28)	Main St.	756+51.92 (RT)	9	79	2.75 to 1.5						792.00	10.47	10.47		39.60	
(26)	360th Ave. (Thru)	758+88.40 (LT)	12	26	2.75 to 1.5	20					456.00	6.03	6.03	0.34	22.80	
	E. Short St.	758+88.40 (RT)	12	30	2.75 to 1.5						504.00	6.66	6.66		25.20	
(28)	Side Rd.	760+48.80 (RT)	10	93	2.75 to 1.5						1,030.00	13.62	13.62		51.50	
(28)	S. Naples St. (Thru)	770+38.95 (LT)	(CADD Measured)		2.75 to 1.5						1,051.00	13.90	13.90		52.55	
		770+38.95 (RT)	10	42	2.75 to 1.5						520.00	6.88	6.88		26.00	
(28)	HMA PE	783+37.00 LT	7	32	2.75 to 1.5	32			273.00	3.61			3.61	1.11	13.65	
(28)	HMA PE	785+55.00 LT	7	22	2.75 to 1.5	22			203.00	2.68			2.68	0.76	10.15	
(28)	HMA PE	790+42.30 RT	7	45	2.75 to 1.5	24			364.00	4.81			4.81	1.19	18.20	
(28)	HMA PE	828+65.20 LT	10	36	2.75 to 1.5	28			460.00	6.08			6.08	0.63	23.00	
(28)	HMA PE	836+58.40 LT	9	29	2.75 to 1.5	26			342.00	4.52			4.52	0.68	17.10	
	[BRIDGE OMISSION #2]: S.N.: 075-0013 (over S FORK MCKEE CRK)	850+75.50 TO 852+61.40														
(30)	HMA PE (w/ MBT) (leading)	870+82.90 RT	9	50	2.75 to 1.5	21			571.50	7.56			7.56	0.77	28.58	
(30)	HMA MBT	873+01.90 LT	7	20	2.75 to 1.5				294.00	3.89			3.89		14.70	
(30)	HMA PE	873+45.20 LT	7	21	2.75 to 1.5	13			196.00	2.59			2.59	0.59	9.80	
(30)	HMA PE	874+52.40 LT	7	20	2.75 to 1.5	13			189.00	2.50			2.50	0.57	9.45	
(30)	HMA MBT	876+36.80 RT	7	20	2.75 to 1.5				294.00	3.89			3.89		14.70	
(41)	335th St. (Thru)	903+33.56 (LT)	9	42	2.75 to 1.5						459.00	6.07	6.07		22.95	
		903+33.56 (RT)	10	36	2.75 to 1.5						460.00	6.08	6.08		23.00	
(41)	330th Ln.	930+65.64 (RT)	9	39	2.75 to 1.5						432.00	5.71	5.71		21.60	
(41)	HMA PE	942+05.40 LT	7	17	2.75 to 1.5				168.00	2.22			2.22		8.40	
(41)	HMA MBT	942+06.60 RT	7	20	2.75 to 1.5				294.00	3.89			3.89		14.70	
(41)	HMA PE (w/ MBT) (trailing)	946+72.50 LT	7	54	2.75 to 1.5	21			493.50	6.53			6.53	1.15	24.68	
(41)	HMA PE	947+79.70 RT	7	17	2.75 to 1.5	12			168.00	2.22			2.22	0.50	8.40	
(41)	335th Ave.	957+43.88 (LT)	9	52	2.75 to 1.5						549.00	7.26	7.26		27.45	
(41)	HMA PE	957+98.20 RT	7	26	2.75 to 1.5	17			231.00	3.05			3.05	0.74	11.55	
(44)	HMA MBT	984+28.20 LT	(CADD Measured)		3.5				245.20	3.24			3.24		12.26	
(45)	320th Ave.	984+67.96 (LT)	9	57	2.75 to 1.5						594.00	7.85	7.85		29.70	
(45)	HMA PE (w/ MBT) (leading)	985+98.50 RT	9	61	2.75 to 1.5	25			670.50	8.87			8.87	0.98	33.53	
(45)	HMA MBT	1004+78.80 LT	7	20	2.75 to 1.5				294.00	3.89			3.89		14.70	
(45)	HMA CE	1005+07.00 RT	10	59	2.75 to 1.5	52			690.00	9.12			9.12	1.10	34.50	
(45)	HMA CE	1009+65.70 RT	10	47	2.75 to 1.5	39			570.00	7.54			7.54	0.85	28.50	
(45)	N CHANDLER AVE	1011+27.90 RT	10	39	2.75 to 1.5	31					490.00	6.48	6.48		24.50	
	HMA SHLDRS 6 1/4"															272.44
	SECTION ENDS	1020+29.00														
	LIMITS OF IMPROVEMENT:	1020+54.00														
	SUBTOTALS						693.00	15.09	11,864.16	156.87	11,974.00	158.32				
	PROJECT TOTAL (6-60122-0000)												331	22	1,192	350

MODEL: Schedule-5 [Sheet]
FILE NAME: c:\pw_work\pwidot\cabrerars\d0806269\D672307-sht-schedule.dgn

USER NAME = rene.cabrera	DESIGNED - RSC	REVISED -	STATE OF ILLINOIS DEPARTMENT OF TRANSPORTATION
	DRAWN - RSC	REVISED -	
	CHECKED -	REVISED -	
PLOT DATE = 8/15/2025	DATE -	REVISED -	

SCHEDULE OF QUANTITIES

SCALE: NTS | SHEET 6 OF 7 SHEETS | STA. | TO STA.

F.A.P. RTE.	SECTION	COUNTY	TOTAL SHEETS	SHEET NO.
554	34RS-5	PIKE	51	13

CONTRACT NO. 72307

ILLINOIS | FED. AID PROJECT

EXCAVATING AND GRADING EXISTING SHOULDER, (SPECIAL)

TYP. SEC. #	LOCATION (STA TO STA) (UNIT = 100')	LENGTH (FOOT)	(X2020060) QUANTITY (UNIT)
	[F.A.P. 554 (IL 107)]		
(10)	636+83.20 TO 639+96.20 RT	313.0	3.13
(10)	639+43.90 TO 642+43.90 LT	300.0	3.00
	(6-60122-0000) PROJECT TOTAL		7

RUMBLE STRIP

TYP SEC #	LOCATION (STA TO STA)	LENGTH (FOOT)	(Z0055300) QUANTITY (SQ YD)
	[F.A.P. 554 (IL 107)]		
(13)	646+75.00 TO 647+00.00 RT	25	1
(16)	653+75.00 TO 654+00.00 RT	25	1
(16)	655+75.00 TO 656+00.00 RT	25	1
(18)	662+25.00 TO 662+50.00 LT	25	1
(18)	664+25.00 TO 664+50.00 LT	25	1
(19)	671+25.00 TO 671+50.00 LT	25	1
	(6-60122-0000) PROJECT TOTAL		6

MAINTENANCE OF TRAFFIC SCHEDULE

TYP SEC #	DESCRIPTION	LOCATION (STA TO STA)	LENGTH (FOOT)	(70100100) TRAF CONT -PROT 701316 (EACH)	(70106500) TEMP BR TRAF SIGNALS (EACH)	LOCATION (STA TO STA)	DESCRIPTION
	[F.A.P. 554 (IL 107)]						
	(STA EQN): 658+83.99 (BK) = 659+02.62 (AH)						
	(BRIDGE OMISSION #1): SN: 075-0012 (over MIDDLE FORK MCKEE CRK) 665+67.40 TO 667+96.00						
(20-25)	Location 1	673+13.40 TO 688+82.10	1,568.70	1	1	674+75.00 TO 687+25.00	SOLID EDGE LINES
(23-28)	Location 2	684+78.80 TO 702+12.50	1,733.70	1	1	686+25.00 TO 700+50.00	SOLID EDGE LINES
	(BRIDGE OMISSION #2): SN: 075-0013 (over S FORK MCKEE CRK) 850+75.50 TO 852+61.40						
(31-37)	Location 3	874+13.00 TO 888+62.00	1,449.00	1	1	875+75.00 TO 887+00.00	SOLID EDGE LINES
(37-41)	Location 4	887+38.00 TO 899+12.50	1,174.50	1	1	889+00.00 TO 898+75.00	SOLID EDGE LINES
(41-45)	Location 5	973+88.00 TO 987+02.10	1,314.10	1	1	975+50.00 TO 985+40.10	SOLID EDGE LINES
	(6-60122-0000) PROJECT TOTAL			5	5		

PARTIAL DEPTH PATCHING SCHEDULE

LOCATION (STA TO STA) (Thickness = 3")	LENGTH (FOOT)	WIDTH (FOOT)	(X4421000) PART DEPTH PATCH (TON)	(X4421002) PART DEPTH PATCH SPL (SQ YD)
[F.A.P. 554 (IL 107)]				
(South of IL 104 Intersection)				
(Southbound Lane)	500	12	112.00	666.67
(6-60122-0000) PROJECT TOTAL			112	667

MODEL: Schedule-6 [Sheet]
FILE NAME: c:\pw_work\pwidot\cabrerars\d0806269\D672307-sht-schedule.dgn

USER NAME = rene.cabrera	DESIGNED - RSC	REVISED -	STATE OF ILLINOIS DEPARTMENT OF TRANSPORTATION
	DRAWN - RSC	REVISED -	
	CHECKED -	REVISED -	
PLOT DATE = 8/15/2025	DATE -	REVISED -	

SCHEDULE OF QUANTITIES

SCALE: NTS | SHEET 7 OF 7 SHEETS | STA. TO STA.

F.A.P. RTE.	SECTION	COUNTY	TOTAL SHEETS	SHEET NO.
554	34RS-5	PIKE	51	14

CONTRACT NO. 72307

ILLINOIS | FED. AID PROJECT

℄ F.A.P. 554 (IL 107)

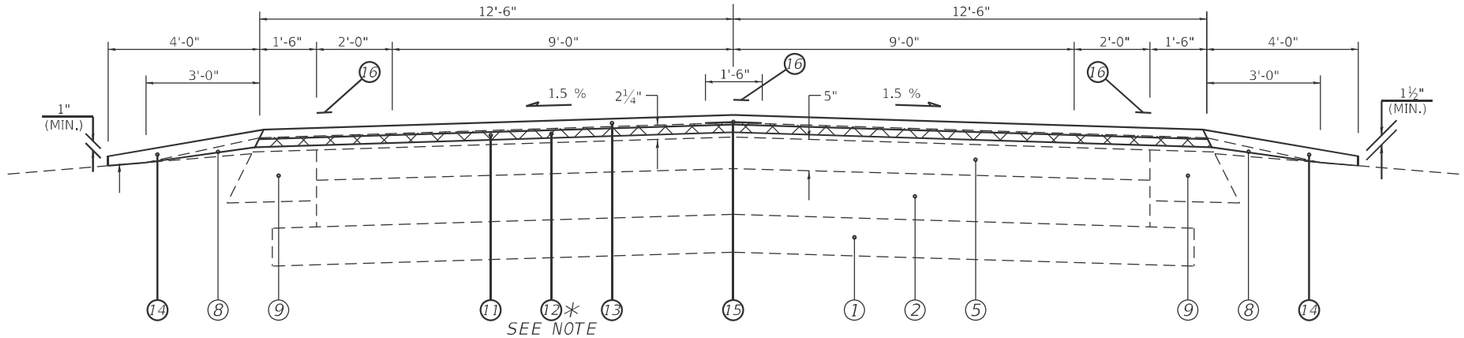

SEE NOTE

(1) STA 536+25.00 TO 610+75.00 [7,450.0'] ∗ SEE NOTE

(6) STA 616+92.90 TO 627+82.90 [1,090.0']

(11) STA 642+43.90 TO 644+06.90 [163.0']

℄ F.A.P. 554 (IL 107)

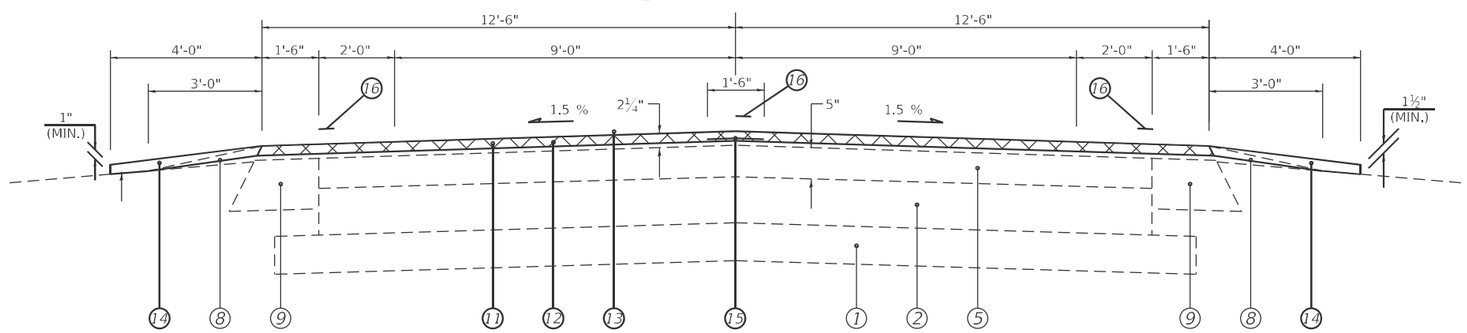

(2) STA 610+75.00 TO 611+18.70 [43.70']

℄ F.A.P. 554 (IL 107)

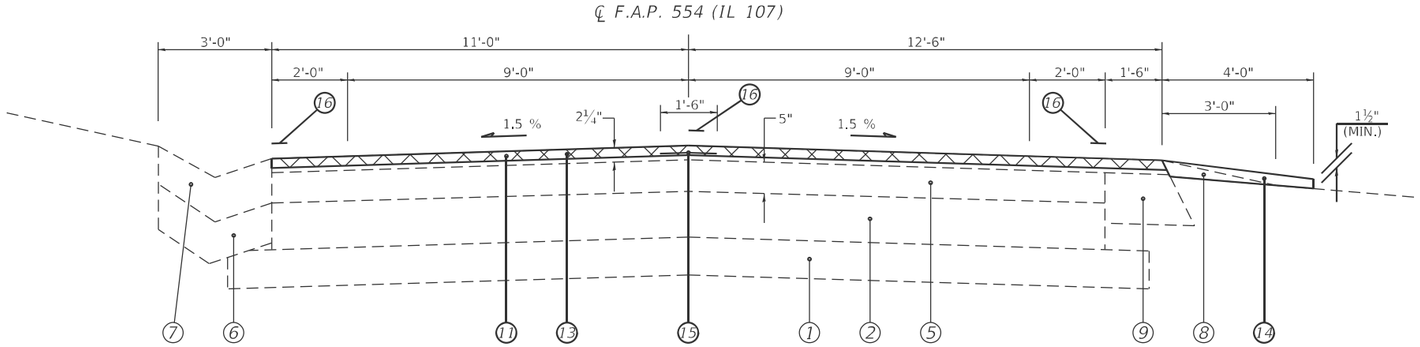

(3) STA 611+18.70 TO 613+10.60 [191.90']

(12) STA 644+06.90 TO 644+22.20 [15.30']

LEGEND

1. EXIST. SUB-BASE GRANULAR 6" & VAR.
2. EXIST. AGGREGATE BASE COURSE 8"
3. (DELETED)
4. EXIST. BITUMINOUS BASE COURSE WIDENING 9"
5. EXIST. BITUMINOUS OVERLAY
6. EXIST. CONCRETE GUTTER, TYPE A (MODIFIED)
7. EXIST. CONCRETE GUTTER (SPECIAL)
8. EXIST. AGGREGATE SHOULDER
9. EXIST. BITUMINOUS SHOULDER 8"
10. (DELETED)
11. PROP. HOT-MIX ASPHALT REMOVAL 1½"
12. PROP. HOT-MIX ASPHALT BINDER COURSE, IL-9.5FG, N50 1¼"
13. PROP. POLYMERIZED HOT-MIX ASPHALT SURFACE COURSE, IL 9.5, MIX "C", N50 1½"
14. PROP. AGGREGATE WEDGE SHOULDER, TYPE B
15. PROP. LONGITUDINAL JOINT SEALANT (INSTALLED BETWEEN BASE CSE & SURF)
16. PROP. MODIFIED URETHANE PAVEMENT MARKING - LINE 5"
17. PROP. HOT-MIX ASPHALT SHOULDERS (TONS)
18. PROP. SUBBASE GRANULAR MATERIAL, TYPE B (TONS) ∗∗
19. PROP. CONCRETE GUTTER, TYPE A
20. PROP. FURNISHED EXCAVATION
21. PROP. HOT-MIX ASPHALT SHOULDERS, 6½"

∗∗ NOMINAL THICKNESS PROPOSED IS 11"

∗ NOTE:

THICKNESS VAR. FR. 1¼" TO 0 FR. STA. 610+93.70 TO 610+75.00

MODEL: Typical Sheet 1 [Sheet]
FILE NAME: c:\pw_work\pwidot\cabrerars\d0806269\D672307-sht-typical.dgn

USER NAME = rene.cabrera	DESIGNED - RSC	REVISED -	
	DRAWN - RSC	REVISED -	
	CHECKED -	REVISED -	
PLOT DATE = 8/15/2025	DATE -	REVISED -	

STATE OF ILLINOIS
DEPARTMENT OF TRANSPORTATION

TYPICAL SECTIONS

SCALE: NTS | SHEET 1 OF 6 SHEETS | STA. 536+25.00 TO STA. 644+22.20

F.A.P RTE.	SECTION	COUNTY	TOTAL SHEETS	SHEET NO.
554	34RS-5	PIKE	51	15

CONTRACT NO. 72307

ILLINOIS | FED. AID PROJECT

℄ F.A.P. 554 (IL 107)

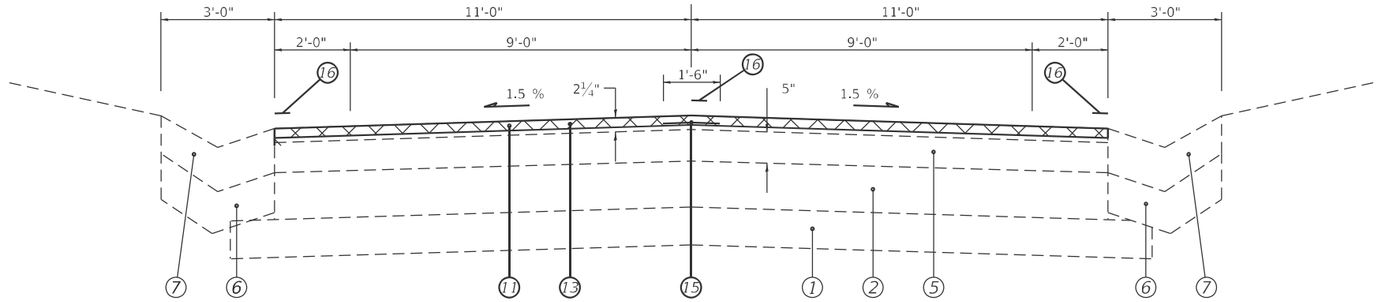

(4) STA 613+10.60 TO 616+81.40 [370.80']

(8) STA 629+60.80 TO 636+05.10 [391.70']

(13) STA 644+22.20 TO 647+22.70 [300.50']

℄ F.A.P. 554 (IL 107)

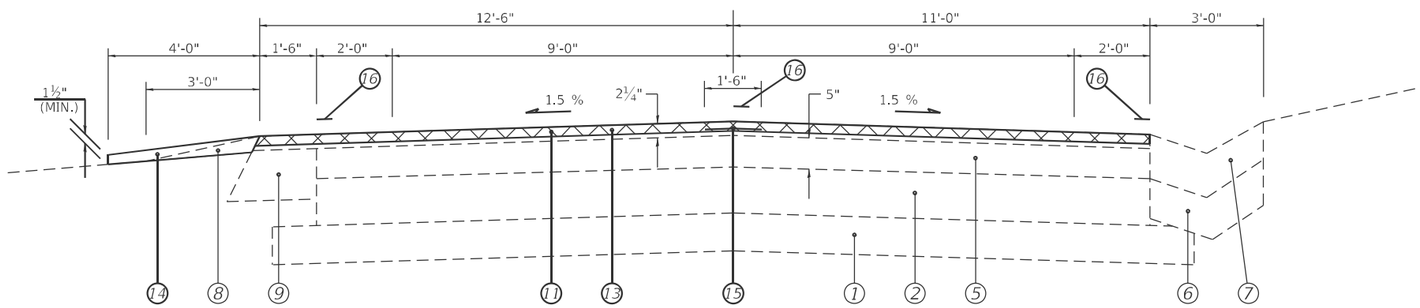

(5) STA 616+81.40 TO 616+92.90 [11.50']

(7) STA 627+82.90 TO 629+60.80 [177.90']

(9) STA 636+05.10 TO 636+83.20 [78.10']

(14) STA 647+22.70 TO 647+97.00 [74.30']

℄ F.A.P. 554 (IL 107)

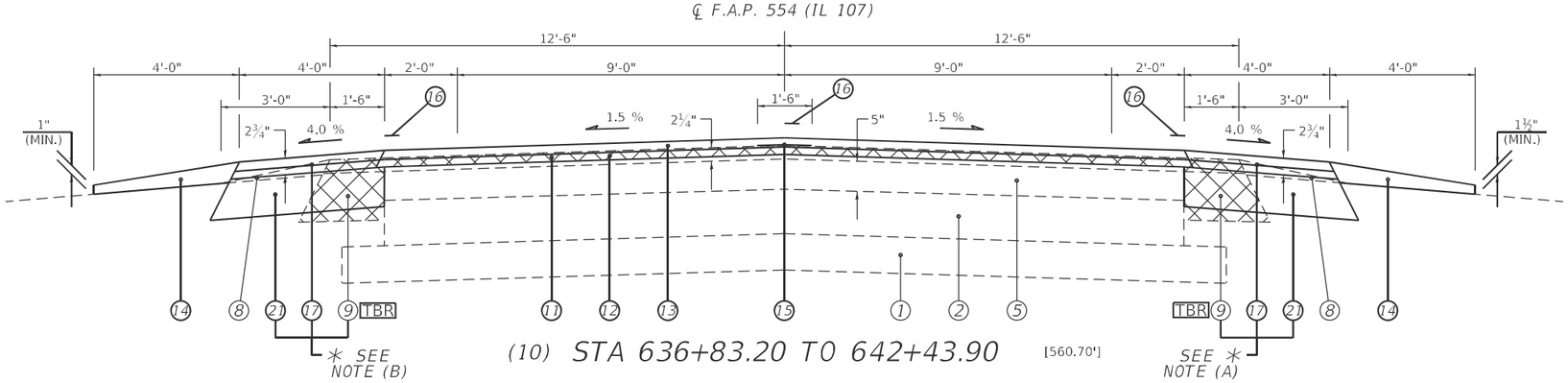

(10) STA 636+83.20 TO 642+43.90 [560.70']

LEGEND

1. EXIST. SUB-BASE GRANULAR 6" & VAR.
2. EXIST. AGGREGATE BASE COURSE 8"
3. (DELETED)
4. EXIST. BITUMINOUS BASE COURSE WIDENING 9"
5. EXIST. BITUMINOUS OVERLAY
6. EXIST. CONCRETE GUTTER, TYPE A (MODIFIED)
7. EXIST. CONCRETE GUTTER (SPECIAL)
8. EXIST. AGGREGATE SHOULDER
9. EXIST. BITUMINOUS SHOULDER 8"
10. (DELETED)
11. PROP. HOT-MIX ASPHALT REMOVAL 1½"
12. PROP. HOT-MIX ASPHALT BINDER COURSE, IL-9.5FG, N50 1¼"
13. PROP. POLYMERIZED HOT-MIX ASPHALT SURFACE COURSE, IL 9.5, MIX "C", N50 1½"
14. PROP. AGGREGATE WEDGE SHOULDER, TYPE B
15. PROP. LONGITUDINAL JOINT SEALANT (INSTALLED BETWEEN BASE CSE & SURF)
16. PROP. MODIFIED URETHANE PAVEMENT MARKING - LINE 5"
17. PROP. HOT-MIX ASPHALT SHOULDERS (TONS)
18. PROP. SUBBASE GRANULAR MATERIAL, TYPE B (TONS) **
19. PROP. CONCRETE GUTTER, TYPE A
20. PROP. FURNISHED EXCAVATION
21. PROP. HOT-MIX ASPHALT SHOULDERS, 6½"

** NOMINAL THICKNESS PROPOSED IS 11"

* NOTES:

(A) FR. STA. 636+83.20 TO 639+96.20 RT

(B) FR. STA. 639+43.90 TO 642+43.90 LT

MODEL: Typical Sheet 2 [Sheet]
FILE NAME: c:\pw_work\pwidot\cabrerars\d0806269\D672307-sht-typical.dgn

USER NAME = rene.cabrera	DESIGNED - RSC	REVISED -	STATE OF ILLINOIS DEPARTMENT OF TRANSPORTATION
	DRAWN - RSC	REVISED -	
	CHECKED -	REVISED -	
PLOT DATE = 8/15/2025	DATE -	REVISED -	

TYPICAL SECTIONS

SCALE: NTS | SHEET 2 OF 6 SHEETS | STA. 613+10.60 TO STA. 647+97.00

F.A.P RTE.	SECTION	COUNTY	TOTAL SHEETS	SHEET NO.
554	34RS-5	PIKE	51	16

CONTRACT NO. 72307

ILLINOIS | FED. AID PROJECT

℄ F.A.P. 554 (IL 107)

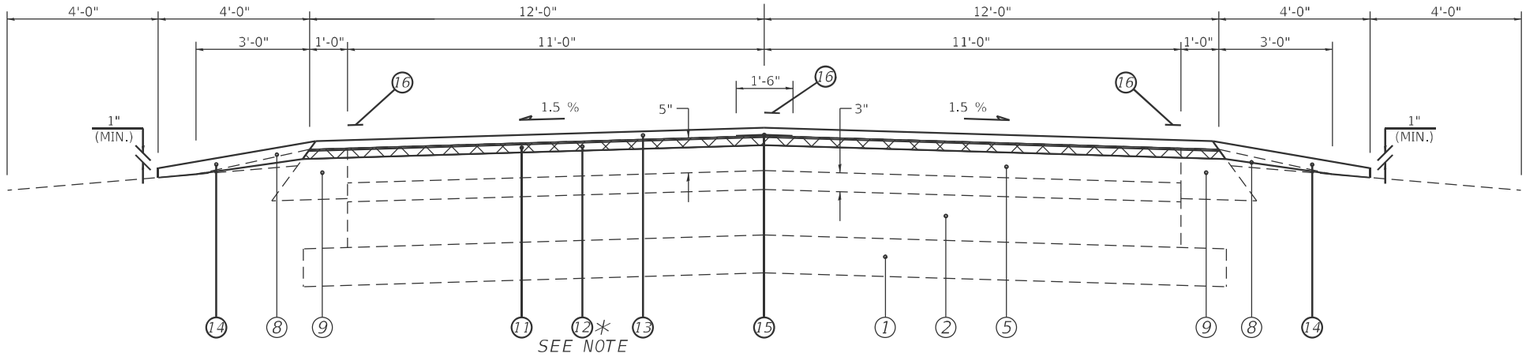

SEE NOTE

✱ SEE NOTE

(15)	STA 647+97.00 TO 648+25.00	[28.0']	(35)	STA 880+69.00 TO 883+00.80	[231.80']
(20)	STA 671+70.40 TO 675+62.10	[391.70']	(37)	STA 886+70.00 TO 889+36.90	[266.90']
(24)	STA 685+50.00 TO 688+29.40	[279.40']	(41)	STA 897+48.60 TO 975+76.60	[7,828.0']
(28)	STA 699+62.00 TO 848+65.40	[14,903.40']	(45)	STA 984+59.90 TO 1020+29.00	[3,569.10']
(31)	STA 854+82.20 TO 876+34.60	[2,152.40']			

℄ F.A.P. 554 (IL 107)

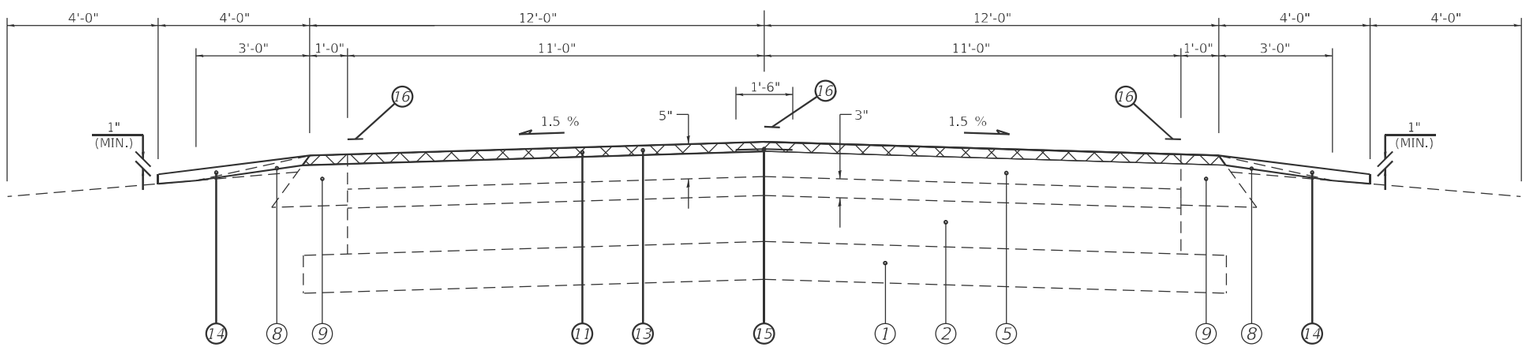

(16) STA 648+25.00 TO 657+20.00 [895.0']

℄ F.A.P. 554 (IL 107)

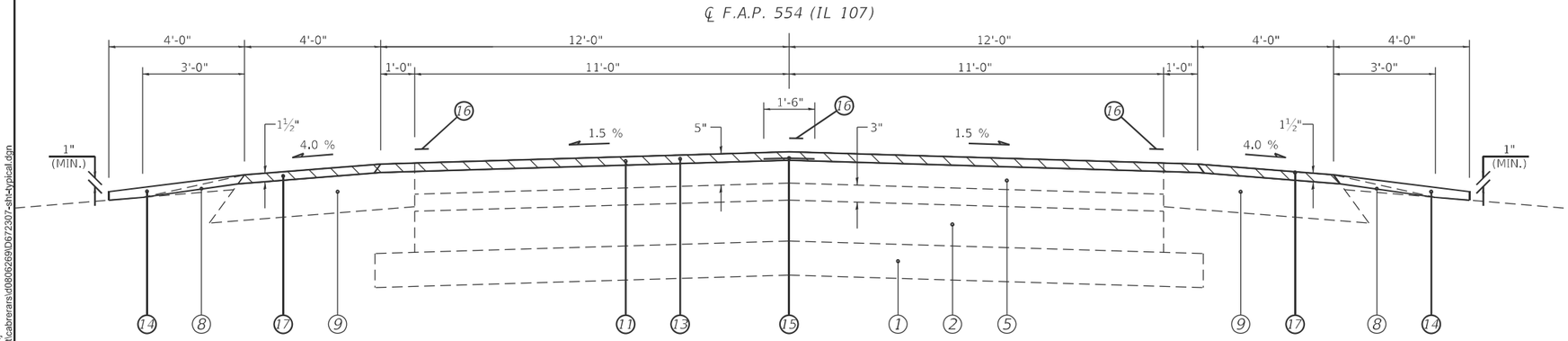

(17) STA 657+20.00 TO 658+83.99 (BK) [163.99']

(18) STA 659+02.62 (AH) TO 665+42.40 [639.78']

LEGEND

1. EXIST. SUB-BASE GRANULAR 6" & VAR.
2. EXIST. AGGREGATE BASE COURSE 8"
3. (DELETED)
4. EXIST. BITUMINOUS BASE COURSE WIDENING 9"
5. EXIST. BITUMINOUS OVERLAY
6. EXIST. CONCRETE GUTTER, TYPE A (MODIFIED)
7. EXIST. CONCRETE GUTTER (SPECIAL)
8. EXIST. AGGREGATE SHOULDER
9. EXIST. BITUMINOUS SHOULDER 8"
10. (DELETED)
11. PROP. HOT-MIX ASPHALT REMOVAL 1½"
12. PROP. HOT-MIX ASPHALT BINDER COURSE, IL-9.5FG, N50 1¼"
13. PROP. POLYMERIZED HOT-MIX ASPHALT SURFACE COURSE, IL 9.5, MIX "C", N50 1½"
14. PROP. AGGREGATE WEDGE SHOULDER, TYPE B
15. PROP. LONGITUDINAL JOINT SEALANT (INSTALLED BETWEEN BASE CSE & SURF)
16. PROP. MODIFIED URETHANE PAVEMENT MARKING - LINE 5"
17. PROP. HOT-MIX ASPHALT SHOULDERS (TONS)
18. PROP. SUBBASE GRANULAR MATERIAL, TYPE B (TONS) ✱✱
19. PROP. CONCRETE GUTTER, TYPE A
20. PROP. FURNISHED EXCAVATION
21. PROP. HOT-MIX ASPHALT SHOULDERS, 6½"

✱✱ NOMINAL THICKNESS PROPOSED IS 11"

✱ NOTE:

THICKNESS VAR. FR. 1¼" TO 0 FR. STA. 648+00.00 TO 648+25.00

(STA EQN):
STA 658+83.99 (BK) =
STA 659+02.62 (AH)

BRIDGE OMISSION #1
S.N.: 075-0012
STA. 665+67.40 TO
STA. 667+96.00

BRIDGE OMISSION #2
S.N.: 075-0013
STA. 850+75.50 TO
STA. 852+61.40

MODEL: Typical Sheet 3 [Sheet]
FILE NAME: c:\pw_work\pwidot\cabrerars\d0806269\D672307-sht-typical.dgn

USER NAME = rene.cabrera	DESIGNED - RSC	REVISED -	STATE OF ILLINOIS DEPARTMENT OF TRANSPORTATION
	DRAWN - RSC	REVISED -	
	CHECKED -	REVISED -	
PLOT DATE = 8/15/2025	DATE -	REVISED -	

TYPICAL SECTIONS

SCALE: NTS | SHEET 3 OF 6 SHEETS | STA. 647+97.00 TO STA. 1020+29.00

F.A.P RTE.	SECTION	COUNTY	TOTAL SHEETS	SHEET NO.
554	34RS-5	PIKE	51	17

CONTRACT NO. 72307

ILLINOIS | FED. AID PROJECT

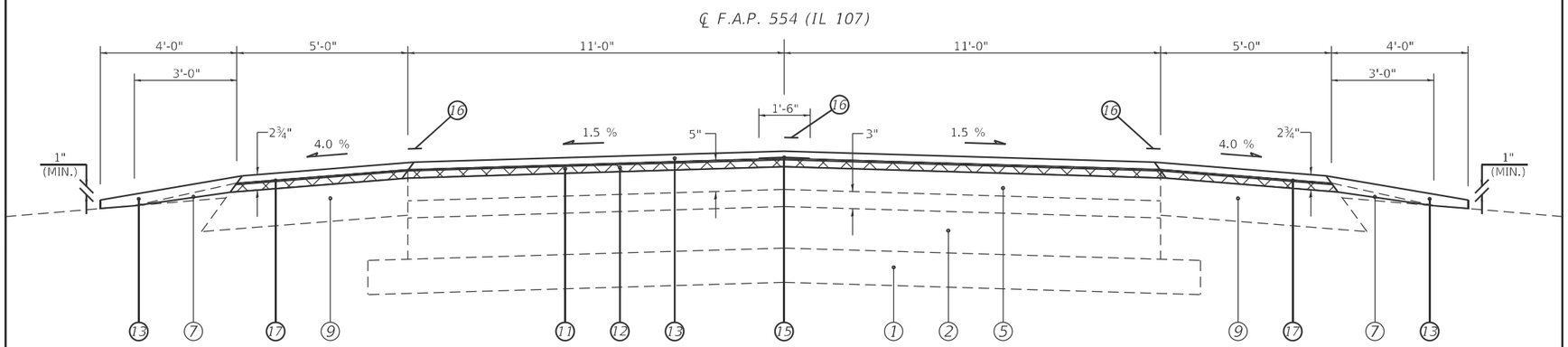

(19) STA 668+21.00 TO 671+70.40 [349.40']

LEGEND

1. EXIST. SUB-BASE GRANULAR 6" & VAR.
2. EXIST. AGGREGATE BASE COURSE 8"
3. (DELETED)
4. EXIST. BITUMINOUS BASE COURSE WIDENING 9"
5. EXIST. BITUMINOUS OVERLAY
6. EXIST. CONCRETE GUTTER, TYPE A (MODIFIED)
7. EXIST. CONCRETE GUTTER (SPECIAL)
8. EXIST. AGGREGATE SHOULDER
9. EXIST. BITUMINOUS SHOULDER 8"
10. (DELETED)
11. PROP. HOT-MIX ASPHALT REMOVAL 1½"
12. PROP. HOT-MIX ASPHALT BINDER COURSE, IL-9.5FG, N50 1¼"
13. PROP. POLYMERIZED HOT-MIX ASPHALT SURFACE COURSE, IL 9.5, MIX "C", N50 1½"
14. PROP. AGGREGATE WEDGE SHOULDER, TYPE B
15. PROP. LONGITUDINAL JOINT SEALANT (INSTALLED BETWEEN BASE CSE & SURF)
16. PROP. MODIFIED URETHANE PAVEMENT MARKING - LINE 5"
17. PROP. HOT-MIX ASPHALT SHOULDERS (TONS)
18. PROP. SUBBASE GRANULAR MATERIAL, TYPE B (TONS) **
19. PROP. CONCRETE GUTTER, TYPE A
20. PROP. FURNISHED EXCAVATION
21. PROP. HOT-MIX ASPHALT SHOULDERS, 6½"

** NOMINAL THICKNESS PROPOSED IS 11"

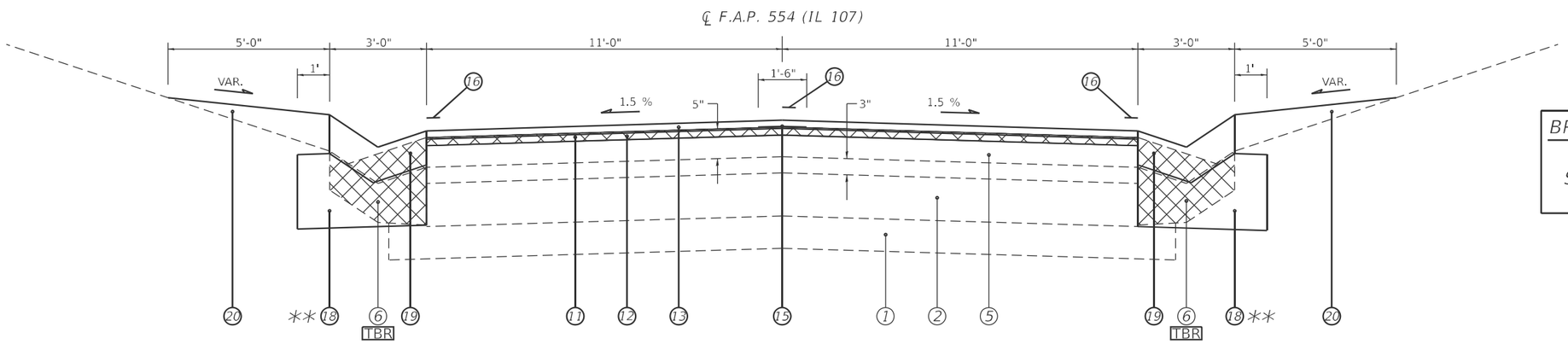

BRIDGE OMISSION #1
S.N.: 075-0012
STA. 665+61.50 TO
STA. 667+88.60

(22) STA 677+79.60 TO 683+63.00 [583.40']
(26) STA 689+68.50 TO 699+24.00 [955.50']
(33) STA 876+82.20 TO 879+70.00 [259.0']
(39) STA 890+46.60 TO 892+82.00 [251.0']
(43) STA 977+26.10 TO 983+80.40 [654.30']

MODEL: Typical Sheet 4 [Sheet]
FILE NAME: c:\pw_work\pwidot\cabrerarsd\d0806269\D672307-sht-typical.dgn

USER NAME = rene.cabrera	DESIGNED - RSC	REVISED -	STATE OF ILLINOIS DEPARTMENT OF TRANSPORTATION
	DRAWN - RSC	REVISED -	
	CHECKED -	REVISED -	
PLOT DATE = 8/15/2025	DATE -	REVISED -	

TYPICAL SECTIONS

SCALE: NTS | SHEET 4 OF 6 SHEETS | STA. 668+21.00 TO STA. 983+80.40

F.A.P RTE.	SECTION	COUNTY	TOTAL SHEETS	SHEET NO.
554	34RS-5	PIKE	51	18
		CONTRACT NO. 72307		
		ILLINOIS FED. AID PROJECT		

℄ F.A.P. 554 (IL 107)

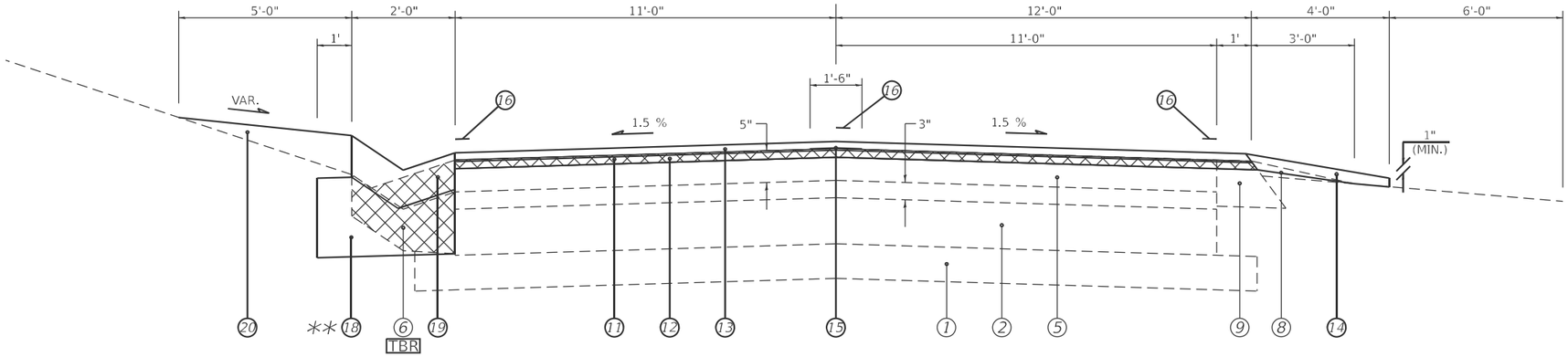

(21) STA 675+62.10 TO 677+79.60 [217.50']

(23) STA 683+63.00 TO 685+50.00 [187.0']

(32) STA 876+34.60 TO 876+82.20 [47.60']

(34) STA 879+70.00 TO 880+69.00 [99.0']

℄ F.A.P. 554 (IL 107)

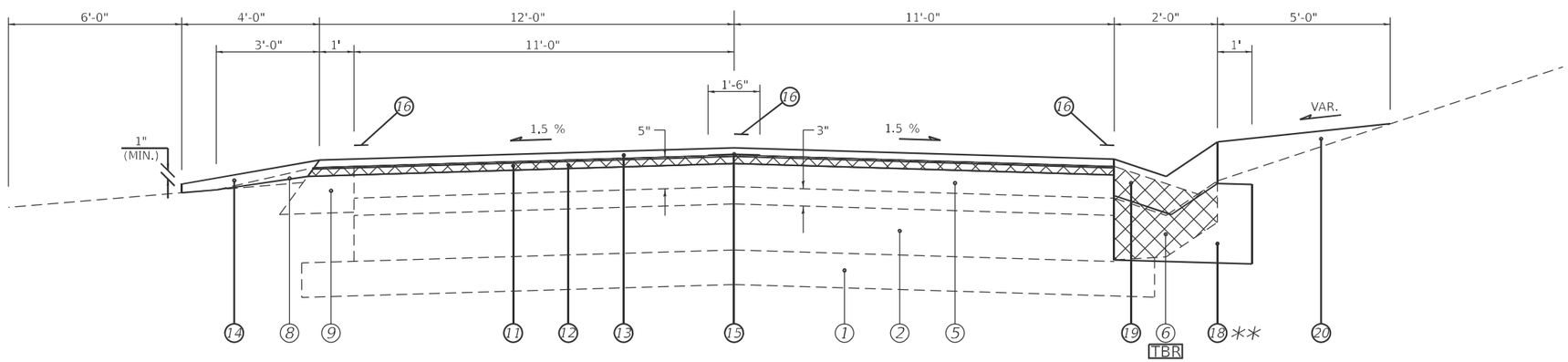

(25) STA 688+29.40 TO 689+68.50 [139.10']

(27) STA 699+24.00 TO 699+62.00 [38.0']

(36) STA 883+00.80 TO 886+70.00 [369.20']

(38) STA 889+36.90 TO 890+46.60 [109.70']

(40) STA 892+82.00 TO 897+48.60 [466.60']

(42) STA 975+76.60 TO 977+26.10 [149.50']

(44) STA 983+80.40 TO 984+59.90 [79.50']

LEGEND

1. EXIST. SUB-BASE GRANULAR 6" & VAR.
2. EXIST. AGGREGATE BASE COURSE 8"
3. (DELETED)
4. EXIST. BITUMINOUS BASE COURSE WIDENING 9"
5. EXIST. BITUMINOUS OVERLAY
6. EXIST. CONCRETE GUTTER, TYPE A (MODIFIED)
7. EXIST. CONCRETE GUTTER (SPECIAL)
8. EXIST. AGGREGATE SHOULDER
9. EXIST. BITUMINOUS SHOULDER 8"
10. (DELETED)
11. PROP. HOT-MIX ASPHALT REMOVAL 1½"
12. PROP. HOT-MIX ASPHALT BINDER COURSE, IL-9.5FG, N50 1¼"
13. PROP. POLYMERIZED HOT-MIX ASPHALT SURFACE COURSE, IL 9.5, MIX "C", N50 1½"
14. PROP. AGGREGATE WEDGE SHOULDER, TYPE B
15. PROP. LONGITUDINAL JOINT SEALANT (INSTALLED BETWEEN BASE CSE & SURF)
16. PROP. MODIFIED URETHANE PAVEMENT MARKING - LINE 5"
17. PROP. HOT-MIX ASPHALT SHOULDERS (TONS)
18. PROP. SUBBASE GRANULAR MATERIAL, TYPE B (TONS) **
19. PROP. CONCRETE GUTTER, TYPE A
20. PROP. FURNISHED EXCAVATION
21. PROP. HOT-MIX ASPHALT SHOULDERS, 6½"

** NOMINAL THICKNESS PROPOSED IS 11"

MODEL: Typical Sheet 5 [Sheet]
FILE NAME: c:\pw_work\pwidot\cabrerars\d0806269\D672307-sht-typical.dgn

USER NAME = rene.cabrera	DESIGNED - RSC	REVISED -	STATE OF ILLINOIS DEPARTMENT OF TRANSPORTATION
	DRAWN - RSC	REVISED -	
	CHECKED -	REVISED -	
PLOT DATE = 8/15/2025	DATE -	REVISED -	

TYPICAL SECTIONS

SCALE: NTS | SHEET 5 OF 6 SHEETS | STA. 675+62.10 TO STA. 984+59.90

F.A.P RTE.	SECTION	COUNTY	TOTAL SHEETS	SHEET NO.
554	34RS-5	PIKE	51	19

CONTRACT NO. 72307

ILLINOIS | FED. AID PROJECT

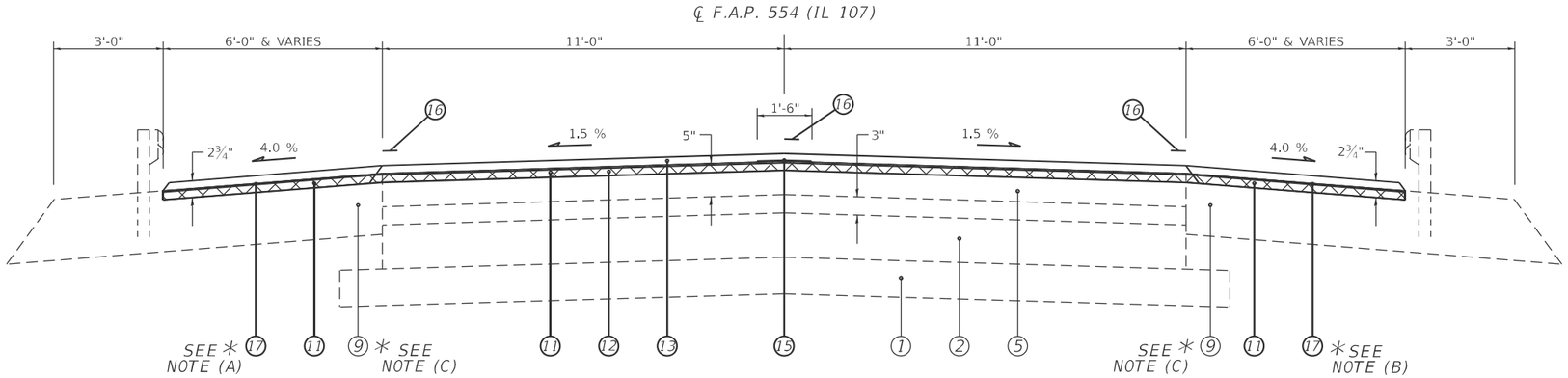

(29) STA 848+65.40 TO 850+50.50 [185.10']

(30) STA 852+86.40 TO 854+82.20 [195.80']

LEGEND

1. EXIST. SUB-BASE GRANULAR 6" & VAR.
2. EXIST. AGGREGATE BASE COURSE 8"
3. (DELETED)
4. EXIST. BITUMINOUS BASE COURSE WIDENING 9"
5. EXIST. BITUMINOUS OVERLAY
6. EXIST. CONCRETE GUTTER, TYPE A (MODIFIED)
7. EXIST. CONCRETE GUTTER (SPECIAL)
8. EXIST. AGGREGATE SHOULDER
9. EXIST. BITUMINOUS SHOULDER 8"
10. (DELETED)
11. PROP. HOT-MIX ASPHALT REMOVAL 1½"
12. PROP. HOT-MIX ASPHALT BINDER COURSE, IL-9.5FG, N50 1¼"
13. PROP. POLYMERIZED HOT-MIX ASPHALT SURFACE COURSE, IL 9.5, MIX "C", N50 1½"
14. PROP. AGGREGATE WEDGE SHOULDER, TYPE B
15. PROP. LONGITUDINAL JOINT SEALANT (INSTALLED BETWEEN BASE CSE & SURF)
16. PROP. PAINT PAVEMENT MARKING - LINE 5"
17. PROP. HOT-MIX ASPHALT SHOULDERS (TONS)
18. PROP. SUBBASE GRANULAR MATERIAL, TYPE B (TONS) ✳✳
19. PROP. CONCRETE GUTTER, TYPE A
20. PROP. FURNISHED EXCAVATION
21. PROP. HOT-MIX ASPHALT SHOULDERS, 6½"

✳✳ NOMINAL THICKNESS PROPOSED IS 11"

BRIDGE OMISSION #2

S.N.: 075-0013
STA. 850+75.50 TO
STA. 852+61.40

✳ NOTES:

(A) PROP. AGGR SHLDR ENDS & HMA SHLDR BEGINS AT STA 849+60.90 LT

(B) PROP. HMA SHLDR ENDS & AGGR SHLDR BEGINS AT STA 853+95.30 RT

(B) EXIST. BIT SHLDR, 10"

MODEL: Typical Sheet 6 (Sheet)
FILE NAME: c:\pw_work\pwidot\cabrerars\d0806269\D672307-sht-typical.dgn

USER NAME = rene.cabrera	DESIGNED - RSC	REVISED -	STATE OF ILLINOIS DEPARTMENT OF TRANSPORTATION
	DRAWN - RSC	REVISED -	
	CHECKED -	REVISED -	
PLOT DATE = 8/15/2025	DATE -	REVISED -	

TYPICAL SECTIONS

SCALE: NTS | SHEET 6 OF 6 SHEETS | STA. 848+65.40 TO STA. 854+82.20

F.A.P RTE.	SECTION	COUNTY	TOTAL SHEETS	SHEET NO.
554	34RS-5	PIKE	51	20

CONTRACT NO. 72307

ILLINOIS | FED. AID PROJECT

72307 - HORIZONTAL ALIGNMENT CONTROL

NAD83/2011 ADJ - STATE PLANE WEST ZONE

POINT TYPE	STATION	NORTHING	EASTING	RADIUS	LENGTH	TANGENT	DELTA/THETA	ROTATION
ALIGNMENT NAME: IL107D								
DESCRIPTION: IL107 MAINLINE								
POT	505+51.19	1159143.517	2130531.555					
PC	547+75.23	1155064.754	2131629.836					
PI	553+19.63	1154539.077	2131771.383	2,861.68	1,075.94	544.40	21.542°	RIGHT
PT	558+51.18	1153998.146	2131710.022					
PC	578+35.40	1152026.568	2131486.372					
PI	586+78.10	1151189.239	2131391.387	2,862.53	1,639.10	842.70	32.808°	LEFT
PT	594+74.49	1150434.004	2131765.238					
PI	629+98.10	1147276.120	2133328.433					
PC	638+80.46	1146485.068	2133719.313					
PI	645+57.26	1145878.301	2134019.133	2,867.84	1,329.28	676.80	26.557°	RIGHT
PT	652+09.74	1145201.508	2134016.038					
PI STA EQN	658+83.99 (BK) =	1144527.264	2134012.954					
ALIGNMENT NAME: IL107A								
DESCRIPTION: IL107 MAINLINE								
PI STA EQN	659+02.62 (AH)	1144527.264	2134012.954					
POT	666+87.92	1143741.973	2134009.259					
PC	677+15.50	1142714.404	2134004.424					
PI	681+70.52	1142259.389	2134002.284	34,315.21	909.99	455.02	1.519°	RIGHT
PT	686+25.48	1141804.591	2133988.079					
PC	692+61.52	1141168.864	2133968.223					
PI	696+61.62	1140768.959	2133955.732	42,845.75	800.18	400.10	1.070°	LEFT
PT	700+61.70	1140368.891	2133950.712					
PC	720+97.12	1138333.631	2133925.173					
PI	728+93.52	1137537.293	2133915.180	1,907.98	1,508.91	796.40	45.312°	LEFT
PT	736+06.02	1136970.166	2134474.304					
PC	744+09.14	1136398.257	2135038.141					
PI	752+64.64	1135789.044	2135638.757	2,859.13	1,662.52	855.50	33.316°	RIGHT
PT	760+71.65	1134950.060	2135806.047					
PC	783+91.65	1132674.849	2136259.716					
PI	788+93.45	1132182.737	2136357.842	2,291.02	988.00	501.80	24.709°	LEFT
PT	793+79.65	1131776.697	2136652.689					
PC	828+09.30	1129001.540	2138667.879					
PI	834+57.60	1128476.957	2139048.807	2,867.05	1,275.16	648.30	25.483°	RIGHT
PT	840+84.45	1127839.518	2139166.977					
POT	851+72.00	1126770.191	2139365.211					
PC	896+20.80	1122395.921	2140176.125					
PI	900+39.00	1121984.727	2140252.353	4,300.88	833.78	418.20	11.107°	RIGHT
PT	904+54.58	1121566.550	2140247.936					
PC	948+33.04	1117188.331	2140201.697					
PI	952+99.74	1116721.657	2140196.769	18,718.66	933.21	466.70	2.856°	RIGHT
PT	957+66.25	1116255.809	2140168.590					
PC	976+26.72	1114398.734	2140056.258					
PI	980+29.32	1113996.869	2140031.950	7,833.97	804.49	402.60	5.884°	LEFT
PT	984+31.21	1113594.629	2140048.966					
PC	1000+53.91	1111973.376	2140117.550					
PI	1004+59.11	1111568.538	2140134.675	17,256.12	810.25	405.20	2.690°	RIGHT
PT	1008+64.16	1111163.342	2140132.780					
PI	1029+28.25	1109099.279	2140123.127					
PI	1031+69.25	1108858.314	2140119.278					
PI	1038+30.25	1108197.320	2140116.561					
POT	1038+69.87	1108157.717	2140117.885					
ALIGNMENT NAME: IL104C - STA 659+14.55 (IL107A)								
DESCRIPTION: IL104 MAINLINE								
POT	1954+35.62	1144096.183	2130279.225					
POT	1993+94.63	1144537.856	2134213.523					
ALIGNMENT NAME: IL104								
DESCRIPTION: IL104 MAINLINE								
POT	1993+97.00	1144537.856	2134213.523					
POT	2019+83.28	1144826.849	2136783.605					
ALIGNMENT NAME: TR274TH - STA 686+71.30 (IL107A)								
DESCRIPTION: SIDE ROAD								
POT	10+00.00	1141758.793	2133986.648					
POT	11+50.00	1141757.761	2134136.645					

72307 - HORIZONTAL ALIGNMENT CONTROL

NAD83/2011 ADJ - STATE PLANE WEST ZONE

POINT TYPE	STATION	NORTHING	EASTING	RADIUS	LENGTH	TANGENT	DELTA/THETA	ROTATION
ALIGNMENT NAME: TR417TH - STA 730+04.18 (IL107A)								
DESCRIPTION: SIDE ROAD								
POT	8+50.00	1137372.774	2134002.181					
POT	10+00.00	1137457.767	2134125.778					
ALIGNMENT NAME: MAIN - STA 756+51.92 (IL107A)								
DESCRIPTION: SIDE ROAD								
POT	8+50.00	1135357.272	2135544.136					
POT	10+00.00	1135354.197	2135694.105					
ALIGNMENT NAME: SHORT-TR360TH - STA 758+88.40 (IL107A)								
DESCRIPTION: SIDE ROAD								
POT	8+50.00	1135130.044	2135614.488					
POT	10+00.00	1135128.503	2135764.480					
POT	11+50.00	1135126.961	2135914.472					
ALIGNMENT NAME: NAPLES-CH5 - STA 770+38.95 (IL107A)								
DESCRIPTION: SIDE ROAD								
POT	8+50.00	1134036.680	2135849.400					
POT	10+00.00	1134001.432	2135995.200					
POT	11+50.00	1133966.184	2136141.000					
ALIGNMENT NAME: TR335TH - STA 903+33.56 (IL107A)								
DESCRIPTION: SIDE ROAD								
POT	8+50.00	1121684.593	2140097.541					
PI	10+00.00	1121687.560	2140247.512					
POT	11+50.00	1121679.766	2140397.309					
ALIGNMENT NAME: TR330TH - STA 930+65.64 (IL107A)								
DESCRIPTION: SIDE ROAD								
POT	8+50.00	1118949.973	2140070.469					
POT	10+00.00	1118955.634	2140220.362					
ALIGNMENT NAME: TR325TH - STA 957+43.88 (IL107A)								
DESCRIPTION: SIDE ROAD								
POT	10+00.00	1116278.137	2140169.928					
POT	11+50.00	1116272.523	2140319.822					
ALIGNMENT NAME: TR320TH - STA 984+67.96 (IL107A)								
DESCRIPTION: SIDE ROAD								
POT	10+00.00	1113557.912	2140050.519					
POT	11+50.00	1113553.852	2140200.464					
ALIGNMENT NAME: FRANKLIN - STA 1021+13.90 (IL107A)								
DESCRIPTION: SIDE ROAD								
POT	8+50.00	1109916.396	2139976.961					
POT	10+00.00	1109913.620	2140126.936					
ALIGNMENT NAME: WEBSTER - STA 1025+41.40 (IL107A)								
DESCRIPTION: SIDE ROAD								
POT	8+50.00	1109486.450	2139974.937					
POT	10+00.00	1109486.124	2140124.936					
POT	11+50.00	1109485.799	2140274.936					
ALIGNMENT NAME: WALNUT - STA 1029+71.42 (IL107A)								
DESCRIPTION: SIDE ROAD								
POT	7+75.00	1109054.740	2139897.442					
POT	10+00.00	1109056.110	2140122.438					
POT	11+50.00	1109057.024	2140272.435					
ALIGNMENT NAME: LIBERTY - STA 1034+02.85 (IL107A)								
DESCRIPTION: SIDE ROAD								
POT	8+50.00	1108623.991	2139968.320					
POT	10+00.00	1108624.713	2140118.318					
POT	11+50.00	1108625.435	2140268.316					

72307 - HORIZONTAL CONTROL STATION

NAD83/2011 ADJ - STATE PLANE WEST ZONE

POINT	DESCRIPTION	NORTHING	EASTING	STATION	OFFSET	CHAIN
293	#4 REBAR W CAP	1150346.743	2131846.886	595+88.92	34.46' LT	IL107D
289	#4 REBAR W CAP	1147259.964	2133313.086	630+05.79	20.92' RT	IL107D
288	#4 REBAR W CAP	1146724.692	2133626.408	636+24.47	22.86' LT	IL107D
286	#4 REBAR W CAP	1146141.845	2133883.519	642+59.33	20.34' LT	IL107D
310	#4 REBAR W CAP	1145680.737	2133959.711	647+25.45	17.98' RT	IL107D
EA 174	NGS ROD IN SLEEVE	1144384.690	2133962.987	660+45.42	49.30' RT	IL107A
6001	#4 REBAR W CAP	1143914.395	2134032.025	665+15.39	21.95' LT	IL107A
6000	#4 REBAR W CAP	1143479.059	2133984.539	669+50.94	23.48' RT	IL107A
1	#4 REBAR W CAP	1135158.106	2135713.400	758+46.01	41.41' RT	IL107A
6003	#4 REBAR W CAP	1127081.474	2139289.522	848+52.14	17.68' RT	IL107A
6002	#4 REBAR W CAP	1126471.924	2139442.211	854+79.31	21.34' LT	IL107A
1002	#4 REBAR W CAP	1121711.097	2140296.274	903+11.14	49.23' LT	IL107A
9440	NGS DISK	1113781.290	2139999.060	982+43.65	44.23' RT	IL107A
4000	#4 REBAR W CAP	1109008.665	2140076.327	1030+19.60	45.35' RT	IL107A
4001	#4 REBAR W CAP	1108186.299	2137784.355	447+62.13	26.27' LT	IL107
1004	#4 REBAR W CAP	1108132.509	2138844.879	458+22.71	26.47' RT	IL107

73707 - BENCHMARKS

NAVD-88 VERTICAL DATUM

BENCHMARK	ELEVATION	DESCRIPTION	STATION	OFFSET	CHAIN
BM 61	540.243	CHSLD [] TOP CENTER HDWL OF 30" PLASTIC PIPE E SIDE OF IL 107 (1.25 MI N OF IL 107 & 104)	592+38.0	19.3' LT	IL107D
BM 60	540.247	CHSLD [] CENTER W HDWL OF 30" CMP, +/-300' S OF MILE MARKER 12.0, 1.10 MI N OF IL 104	600+87.9	18.7' RT	IL107D
BM 107-44	570.791	CHSLD [] CENTER E HDWL CULVERT UNDER IL 107	610+85.0	24.7' LT	IL107D
BM 59	591.995	CHSLD [] TOP CENTER E CONC HDWL OF 15" CLAY PIPE @ CREST OF HILL, 0.75 MI N OF IL 104	617+48.1	31.7' LT	IL107D
BM 58	593.507	CHSLD [] ON GUTTER FLAG @ END OF W GUTTER @ TOP OF THE HILL, 0.55 MI N OF IL 104	627+83.5	11.7' RT	IL107D
BM 57	558.939	CHSLD [] ON SE CORNER OF CONC AROUND INLET @ END OF E CONC GUTTER, 0.40 MI N OF IL 104	636+03.3	18.2' LT	IL107D
BM 56	536.290	CHSLD [] ON END OF GUTTER FLAG ON E SIDE IL 107, +/- 75' S OF SPL55 SIGN, 0.25 MI N OF IL 104	644+03.8	13.2' LT	IL107D
BM 55	514.432	PUNCH HOLE IN S END OF 24" CMP @ FE ON W SIDE OF IL 107, 0.15 MI N OF IL 104	649+64.7	36.7' RT	IL107D
BM IL107-43	528.359	CHSLD [] CENTER W HDWL CULVERT UNDER IL 107	643+69.4	41.0' RT	IL107D
BM IL107-42	496.269	CHSLD [] CENTER E HDWL CULVERT UNDER IL 107	652+31.0	26.0' LT	IL107D
BM 54	494.620	RAISED SPOT @ HOLE IN TOP END OF W 42" RCP FES ,+/ 100' N OF INTERSECTION IL 104 & 107	657+90.8	33.1' RT	IL107A
NGS EA 174	491.840	NGS STAINLESS STEEL ROD ENCASED IN 6" PVC SLEEVE SW QUAD IL 104 & 107	660+45.4	42.3' RT	IL107A
BM IL107-41	498.719	CHSLD [] NE ABUT STR #075-0012 BRIDGE AT MIDDLE FORK CREEK BUILT IN 2001	665+97.8	16.6' LT	IL107A
BM IL107-40	499.222	CHSLD [] SE ABUT STR #075-0012 BRIDGE AT MIDDLE FORK CREEK BUILT IN 2001	667+62.3	15.8' LT	IL107A
BM IL107-39	506.404	CHSLD [] CENTER W HDWL CULVERT UNDER IL 107	675+18.8	23.5' RT	IL107A
BM IL107-38	530.351	RR SPIKE IN BACK SIDE OF POWER POLE AT GROUND LEVEL W SIDE IL 107	684+53.5	51.2' RT	IL107A
BM IL107-37	587.724	RR SPIKE IN FACE OF POWER POLE AT GROUND LEVEL W SIDE IL 107	696+26.5	49.1' RT	IL107A
BM IL107-36	582.134	CHSLD [] CENTER E HDWL CULVERT UNDER IL 107	703+81.2	28.8' LT	IL107A
BM IL107-35	578.867	CHSLD [] N END E HDWL CULVERT UNDER IL 107	707+95.1	26.5' LT	IL107A
BM IL107-34	564.118	RR SPIKE IN FACE OF POWER POLE AT GROUND LEVEL E SIDE IL 107	721+13.2	64.4' LT	IL107A
BM IL107-32	570.439	CHSLD [] CENTER W HDWL CULVERT UNDER IL 107	734+38.9	21.8' RT	IL107A
BM IL107-31	574.207	CHSLD [] CENTER W HDWL CULVERT UNDER IL 107	746+23.4	36.6' RT	IL107A
BM IL107-30	585.697	CHSLD [] CENTER W HDWL CULVERT UNDER IL 107 SW QUAD WITH TR 360TH AVE	759+31.1	24.5' RT	IL107A
BM IL107-29	585.387	CHSLD [] CENTER E HDWL CULVERT UNDER IL 107 SE QUAD WITH TR 360TH AVE	759+26.3	25.1' LT	IL107A
BM IL107-28	582.199	CHSLD [] CENTER E HDWL CULVERT UNDER IL 107	772+63.7	25.6' LT	IL107A
BM IL107-27	571.148	CHSLD [] S END E HDWL CULVERT UNDER IL 107	781+53.5	23.3' LT	IL107A
BM IL107-26	548.575	CHSLD [] CENTER E HDWL CULVERT UNDER IL 107	798+92.6	23.1' LT	IL107A
BM IL107-25	509.054	CHSLD [] S END E HDWL CULVERT UNDER IL 107	808+54.2	36.4' LT	IL107A
BM IL107-24	508.653	CHSLD [] CENTER W HDWL CULVERT UNDER IL 107	814+99.7	44.2' RT	IL107A
BM IL107-23	494.312	CHSLD [] CENTER E HDWL CULVERT UNDER IL 107	829+35.0	43.9' LT	IL107A
BM IL107 22	483.716	CHSLD [] CENTER E HDWL CULVERT UNDER IL 107	837+54.2	27.4' LT	IL107A
BM IL107-21	489.957	CHSLD [] NE WINGWALL STR #075-0013 BUILT IN 1997	851+09.5	17.6' LT	IL107A
BM IL107-20	490.232	CHSLD [] SW WINGWALL STR #075-0013 BUILT IN 1997	852+35.0	17.5' RT	IL107A
BM IL107-19	485.184	CHSLD [] N END W HDWL CULVERT UNDER IL 107	871+69.3	44.2' RT	IL107A
BM IL107-18	508.159	CHSLD [] CENTER E HDWL CULVERT UNDER IL 107	881+59.2	41.4' LT	IL107A
BM IL107-17	567.084	CHSLD [] CENTER W HDWL CULVERT UNDER IL 107	893+37.0	37.8' RT	IL107A
BM IL107-16	599.271	CHSLD [] SW CORNER HDWL JUST N OF GRIGGSVILLE WATER WORKS BUILDING E SIDE IL 107	902+46.6	67.9' LT	IL107A
BM 107-15	600.948	CHSLD [] CENTER E HDWL CULVERT UNDER IL 107	914+63.5	24.6' LT	IL107A
BM IL107-14	610.489	RR SPIKE IN BACK SIDE POWER POLE AT GROUND LEVEL W SIDE IL 107	925+85.7	52.0' RT	IL107A
BM IL107-13	619.801	RR SPIKE IN BACK SIDE POWER POLE AT GROUND LEVEL W SIDE IL 107	937+57.9	50.0' RT	IL107A
BM IL107-12	623.056	CHSLD [] CENTER W HDWL CULVERT UNDER IL 107	949+35.7	35.6' RT	IL107A
BM IL107-11	619.158	CHSLD [] CENTER W HDWL CULVERT UNDER IL 107 NW QUAD WITH TR 325TH AVE	957+27.0	44.6' RT	IL107A
BM IL107-10	611.763	CHSLD [] N END W HDWL OLD CULVERT ON E SIDE OF IL 107	963+32.2	53.4' LT	IL107A
BM IL107-9	646.425	RR SPIKE IN BACK SIDE POWER POLE MARKED #49 AT GROUND LEVEL W SIDE IL 107	972+36.0	50.7' RT	IL107A
NGS 9440	679.565	NGS SURVEY DISK IN CONC	982+43.6	44.2' RT	IL107A
BM IL107-8	657.033	CHSLD [] CENTER W HDWL CULVERT UNDER IL 107	990+31.8	45.8' RT	IL107A
BM IL107-7	676.466	RR SPIKE IN POWER POLE AT GROUND LEVEL W SIDE IL 107	999+19.7	50.6' RT	IL107A
BM 107-6	673.859	CHSLD [] CENTER W HDWL CULVERT UNDER IL 107 S SIDE S ENTR TO LYNCH LIVESTOCK	1011+54.4	35.3' RT	IL107A
BM 107-5	657.489	CHSLD [] CENTER W HDWL CULVERT UNDER IL 107 APPROX 100' S OF FRANKLIN ST	1021+98.3	29.5' RT	IL107A
BM 107-4	668.898	CHSLD [] N SIDE FOUNDATION DROP INLET N OF WALNUT ST & W SIDE IL 107	1027+73.5	23.9' RT	IL107A
BM 107-3	676.329	CHSLD [] LIGHTPOLE FOUNDATION NW QUAD IL 107 (QIUNCY ST) & IL 107 (FEDERAL ST)	470+51.9	24.5' LT	IL107
BM 52	516.111	CHSLD [] CENTER HDWL OF 2'X2' BOX CULVERT@ NE QUAD TR 412TH ST & IL 104	1966+76.4	20.3' LT	IL104C
BM 53	528.889	CHSLD [] TOP OF N GUTTER, 1' FROM END @ SPILLWAY, 1.6 MI E OF TR 400TH ST	1980+65.0	14.0' LT	IL104C
BM 104-42	500.256	CHSLD [] W END S HDWL CULVERT UNDER IL 104	1986+12.5	28.9' RT	IL104C
BM IL104-41	494.387	CHSLD [] APPROX 4' W OF E END S HDWL STR #075-2006 & JUST W OF TR 422ND ST	2005+57.6	18.6' RT	IL104
BM IL104-40	493.992	CHSLD [] E END N HDWL STR #075-2006 & JUST W OF TR 422ND ST	2005+67.3	31.5' LT	IL104
BM IL104-39	486.919	CHSLD [] CENTER S PRECAST CULVERT UNDER IL 104	2016+85.9	37.8' RT	IL104

MODEL: ATB-3 [Sheet]
FILE NAME: c:\pw_work\pwidot\cabrerars\d0806269\D672307-sht-ATB.dgn

USER NAME = rene.cabrera	DESIGNED - RSC	REVISED -	STATE OF ILLINOIS DEPARTMENT OF TRANSPORTATION
	DRAWN - RSC	REVISED -	
	CHECKED -	REVISED -	
PLOT DATE = 8/13/2025	DATE -	REVISED -	

ALIGNMENTS, TIES, & BENCHMARKS

SCALE: NTS | SHEET 2 OF 2 SHEETS | STA. TO STA.

F.A.P. RTE.	SECTION	COUNTY	TOTAL SHEETS	SHEET NO.
554	34RS-5	PIKE	51	22
		CONTRACT NO. 72307		
		ILLINOIS	FED. AID PROJECT	

MODEL: 72307 Plan Sheet 1
FILE NAME: c:\pw_work\pwidot\cabrerars\d0806269\D672307-sht-plan50.dgn

USER NAME = rene.cabrera	DESIGNED - RSC	REVISED -	
	DRAWN - RSC	REVISED -	
	CHECKED -	REVISED -	
PLOT DATE = 9/4/2025	DATE -	REVISED -	

STATE OF ILLINOIS
DEPARTMENT OF TRANSPORTATION

PLAN SHEET

SCALE: 50 | SHEET 1 OF 19 SHEETS | STA. 531+00.00 | TO STA. 561+00.00

F.A.P. RTE.	SECTION	COUNTY	TOTAL SHEETS	SHEET NO.
554	34RS-5	PIKE	51	23
		CONTRACT NO. 72307		
		ILLINOIS	FED. AID PROJECT	

MODEL: 72307 Plan Sheet 2
FILE NAME: c:\pw_work\pwidot\cabrerars\d0806269\D672307-sht-plan50.dgn

USER NAME = rene.cabrera	DESIGNED - RSC	REVISED -	STATE OF ILLINOIS DEPARTMENT OF TRANSPORTATION
	DRAWN - RSC	REVISED -	
	CHECKED -	REVISED -	
PLOT DATE = 8/13/2025	DATE -	REVISED -	

PLAN SHEET

SCALE: 50 | SHEET 2 OF 19 SHEETS | STA. 561+00.00 TO STA. 591+00.00

F.A.P. RTE.	SECTION	COUNTY	TOTAL SHEETS	SHEET NO.
554	34RS-5	PIKE	51	24
		CONTRACT NO. 72307		
		ILLINOIS	FED. AID PROJECT	

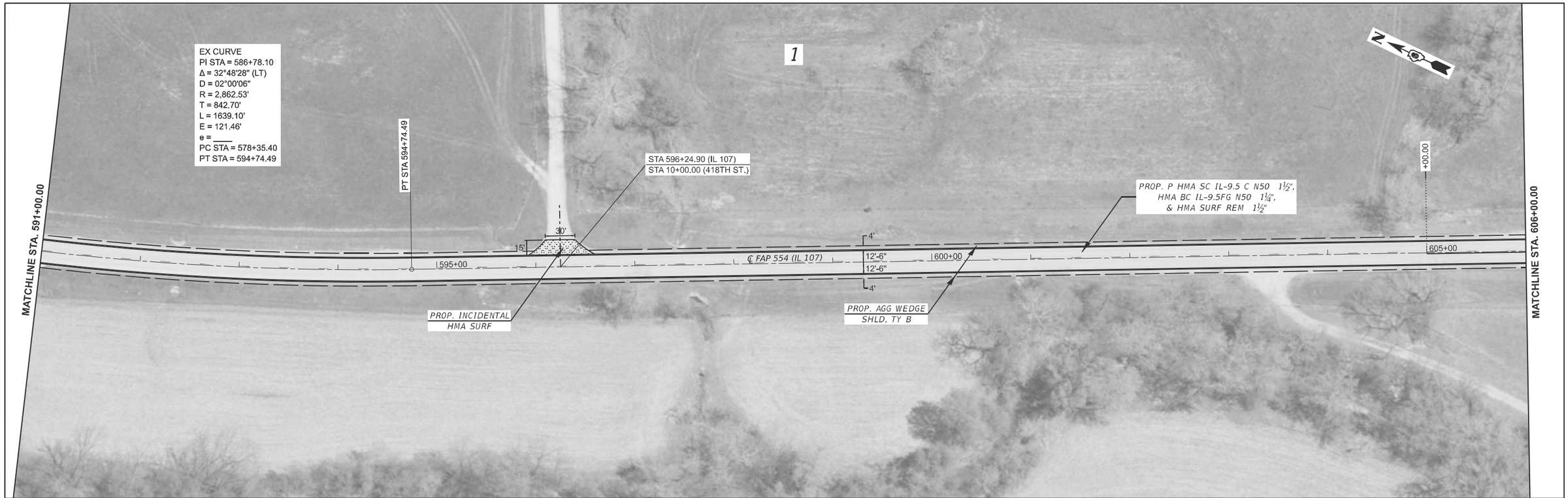

MODEL: 72307 Plan Sheet 3
FILE NAME: c:\pw_work\pwidot\cabrerars\d0806269\D672307-sht-plan50.dgn

USER NAME = rene.cabrera	DESIGNED -	REVISED -	
	DRAWN -	REVISED -	
	CHECKED -	REVISED -	
PLOT DATE = 9/4/2025	DATE -	REVISED -	

STATE OF ILLINOIS
DEPARTMENT OF TRANSPORTATION

PLAN SHEET

SCALE: 50 | SHEET 3 OF 19 SHEETS | STA. 591+00.00 TO STA. 621+00.00

F.A.P. RTE.	SECTION	COUNTY	TOTAL SHEETS	SHEET NO.
554	34RS-5	PIKE	51	25
		CONTRACT NO. 72307		
		ILLINOIS FED. AID PROJECT		

MODEL: 72307 Plan Sheet 4
FILE NAME: c:\pw_work\pwidot\cabrerars\d0806269\D672307-sht-plan50.dgn

USER NAME = rene.cabrera	DESIGNED - RSC	REVISED -	
	DRAWN - RSC	REVISED -	
	CHECKED -	REVISED -	
PLOT DATE = 8/15/2025	DATE -	REVISED -	

STATE OF ILLINOIS
DEPARTMENT OF TRANSPORTATION

PLAN SHEET

SCALE: 50 | SHEET 4 OF 19 SHEETS | STA. 621+00.00 TO STA. 636+00.00

F.A.P. RTE.	SECTION	COUNTY	TOTAL SHEETS	SHEET NO.
554	34RS-4	PIKE	51	26

CONTRACT NO. 72307

ILLINOIS | FED. AID PROJECT

LON = STA 639+56.40 TO 642+31.40 LT

LON = STA 637+08.70 TO 642+83.70 RT

PROP. HMA SC IL-9.5 C N50 1½" & HMA SURF REM 1½"

PROP. TR BAR TRM T1 SPL TAN

PROP. SPBGR TY B 6FT POSTS

PROP. SPBGR TY B 9FT POSTS

PROP. GUARDRAIL REMOV

PROP. AGG WEDGE SHLD, TY B

PROP. RUMBLE STRIP

PROP. P HMA SC IL-9.5 C N50 1½", HMA BC IL-9.5 N50 1¼", & HMA SURF REM 1½"

PROP. HMA SC IL-9.5 C N50 1½" & HMA SURF REM 1½"

PROP. P HMA SC IL-9.5 C N50 1½", HMA BC IL-9.5 N50 1¼", & HMA SURF REM 1½"

PROP. P HMA SC IL-9.5 C N50 1½", HMA BC IL-9.5FG N50 1¼", & HMA SURF REM 1½"

PC STA 638+80.46

PI STA 645+57.26

℄ FAP 554 (IL 107)

MATCH LINE STA. 636+00.00

MATCH LINE STA. 651+00.00

EX CURVE
PI STA = 645+57.26
Δ = 26°33'26" (RT)
D = 01°59'52"
R = 2,867.84'
T = 676.80'
L = 1329.28'
E = 78.78'
e = ____
PC STA = 638+80.46
PT STA = 652+09.74

RAMP DETAIL

PROP. P HMA SC IL-9.5 C N50 1½" — 648+25.00 — PROP. HMA BC IL-9.5FG N50 1¼" — 648+50.00 — 25' — 1½" — 1¼" — EXIST. AGGR BASE CSE — PROP. HMA SURF REM 1½" — EXIST. BIT OVERLAY — EXIST. PCC PAVT

PROP. HMA BC IL-9.5FG N50 1¼" — 665+42.40 — PROP. P HMA SC IL-9.5 C N50 1½" — 665+67.40 — 25' — 1½" — 1¼" — PROP. SAW CUT — PROP. HMA SURF REM 1½" — EXIST. AGGR BASE CSE — EXIST. BIT OVERLAY

PROP. SAW CUT SHALL BE INCLUDED IN THE COST FOR HMA SURF REM 1½"

JOINT DETAIL

LIMITS OF IMPROVEMENT STA 1993+94.63

POT STA 666+EAR 745 (IL 107)

PROP. HMA SHLD 2¾" (TONS)

PROP. RUMBLE STRIP

PROP. AGG WEDGE SHLD, TY B

STA 659+14.55 (IL 107)
STA 1991+92.75 (IL 104)

(STA EQN):
PI STA 658+83.99 (BK) =
PI STA 659+02.62 (AH)

LIMITS OF IMPROVEMENT STA 1990+00.00

STA EQN

MATCH LINE STA. 651+00.00

MATCH LINE STA. 666+00.00

EX CURVE
PI STA = 645+57.26
Δ = 26°33'26" (RT)
D = 01°59'52"
R = 2,867.84'
T = 676.80'
L = 1329.28'
E = 78.78'
e = ____
PC STA = 638+80.46
PT STA = 652+09.74

PROP. SAW CUT SHALL BE INCLUDED IN THE COST FOR HMA SURF REM - BUTT JT.

PROP. P HMA SC IL-9.5 C N50 1½" — 1900+00.00 1993+94.63 — 25' — 1½" — 2¾" — PROP. SAW CUT — PROP. HMA SURF REM - BUTT JT. — EXIST. BIT OVERLAY — EXIST. PCC PAVT

PROP. HMA BC IL-9.5FG N50 1¼" — 1900+25.00 1993+89.63 — 1½" — 1¼" — PROP. HMA SURF REM 1½"

JOINT DETAIL

USER NAME = rene.cabrera	DESIGNED - RSC	REVISED -
	DRAWN - RSC	REVISED -
PLOT SCALE = $SCALE$	CHECKED -	REVISED -
PLOT DATE = 9/4/2025	DATE -	REVISED -

STATE OF ILLINOIS
DEPARTMENT OF TRANSPORTATION

PLAN SHEET

SCALE: 50 | SHEET 5 OF 19 SHEETS | STA. 636+00.00 TO STA. 666+00.00

F.A.P. RTE.	SECTION	COUNTY	TOTAL SHEETS	SHEET NO.
554	34RS-5	PIKE	51	27

CONTRACT NO. 72307

ILLINOIS | FED. AID PROJECT

MODEL: 72307 Plan Sheet 5
FILE NAME: pw://ildot-pw.bentley.com:PWIDOT/Documents/IDOT Offices-District 6/ORD Projects-D672307/CADData/CADsheets/D672307-sht-plan56.dgn

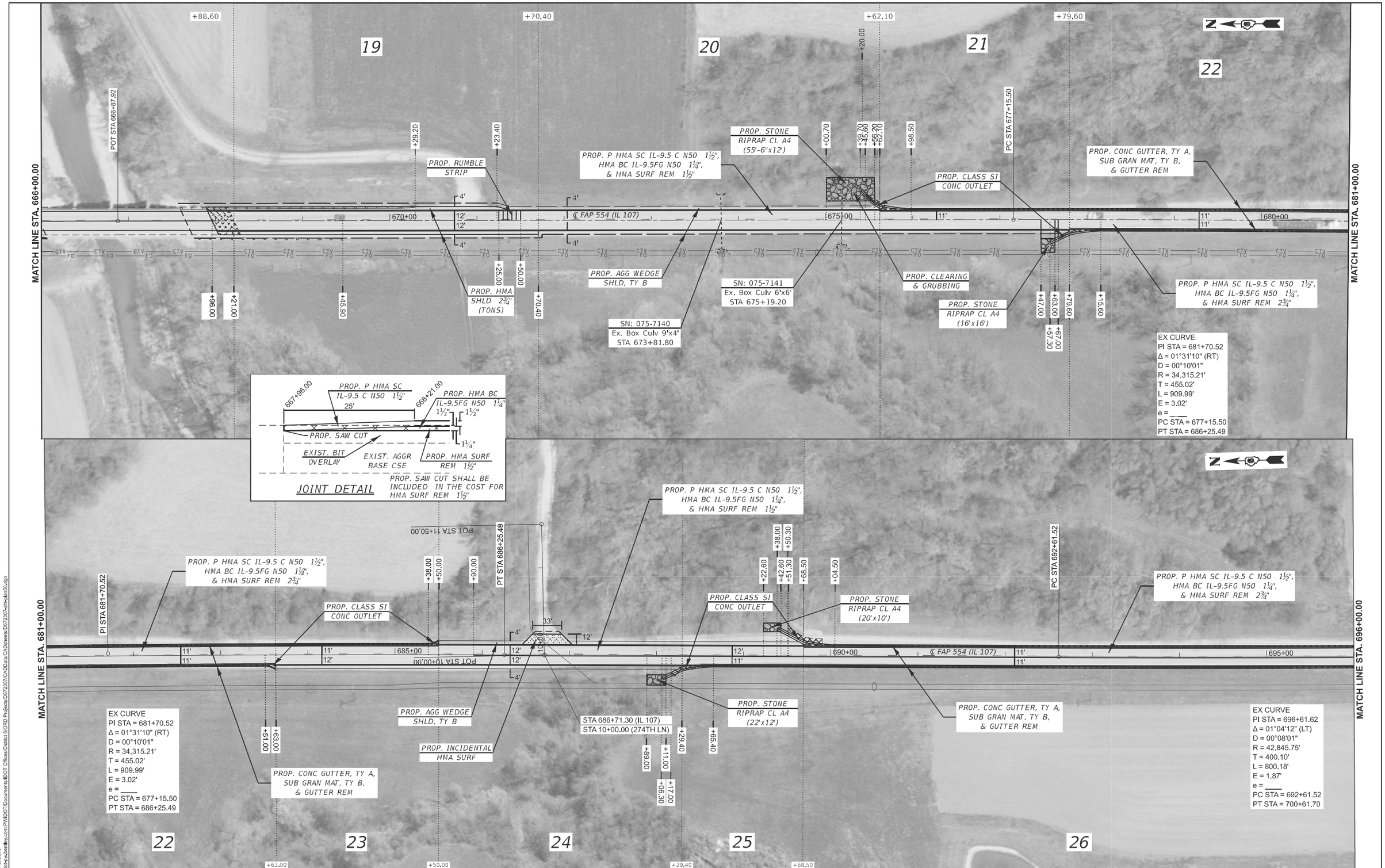

USER NAME = rene.cabrera	DESIGNED - RSC	REVISED -
	DRAWN - RSC	REVISED -
PLOT SCALE = $SCALE$	CHECKED -	REVISED -
PLOT DATE = 9/4/2025	DATE -	REVISED -

STATE OF ILLINOIS
DEPARTMENT OF TRANSPORTATION

PLAN SHEET

SCALE: 50 | SHEET 6 OF 19 SHEETS | STA. 666+00.00 TO STA. 696+00.00

F.A.P. RTE.	SECTION	COUNTY	TOTAL SHEETS	SHEET NO.
554	34RS-5	PIKE	51	28

CONTRACT NO. 72307

ILLINOIS | FED. AID PROJECT

MODEL: 72307 Plan Sheet 6
FILE NAME: pw://ildot-pw.bentley.com:PWIDOT/Documents/IDOT Offices-Districts 6/ORD Projects-D672307/CADData/CADsheets/D672307-sht-hdr-05.dgn

MODEL: 72307 Plan Sheet 7
FILE NAME: pw:\\ildot-pw.bentley.com:PWIDOT\Documents\IDOT Offices\District 6\ORD Projects\D572307\CADData\CADsheets\D572307-sht-plan50.dgn

USER NAME = rene.cabrera	DESIGNED - RSC	REVISED -	
	DRAWN - RSC	REVISED -	
PLOT SCALE = $SCALE$	CHECKED -	REVISED -	
PLOT DATE = 8/14/2025	DATE -	REVISED -	

STATE OF ILLINOIS
DEPARTMENT OF TRANSPORTATION

PLAN SHEET

SCALE: 50 | SHEET 7 OF 19 SHEETS | STA. 666+00.00 TO STA. 726+00.00

F.A.P. RTE.	SECTION	COUNTY	TOTAL SHEETS	SHEET NO.
554	34RS-5	PIKE	51	29

CONTRACT NO. 72307

ILLINOIS | FED. AID PROJECT

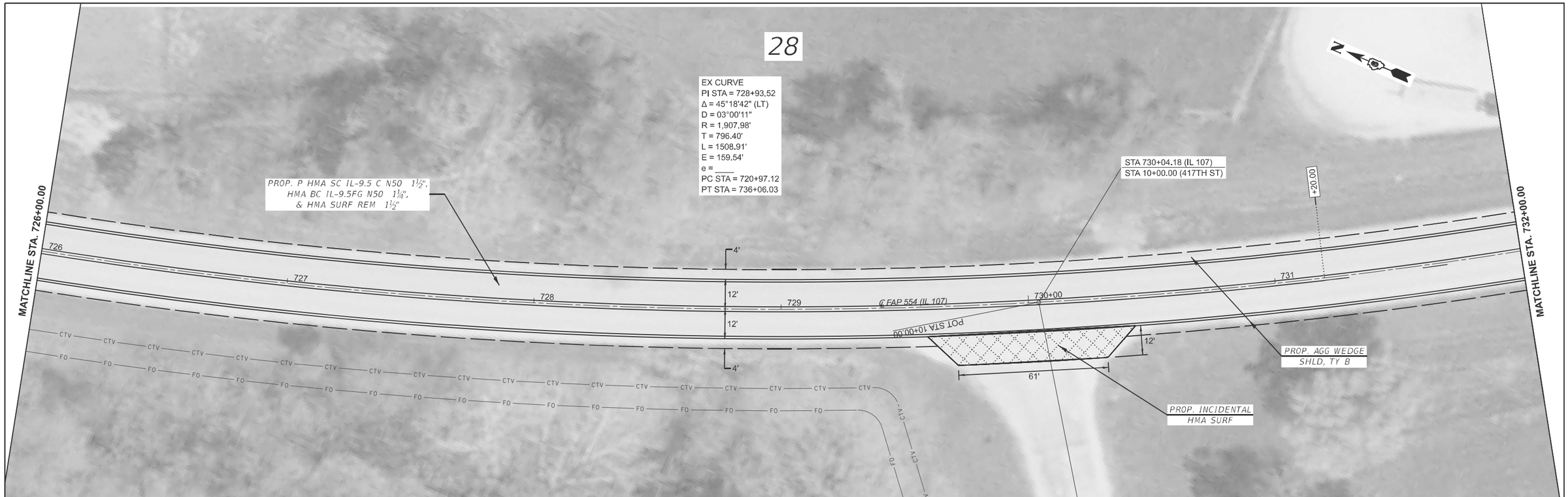

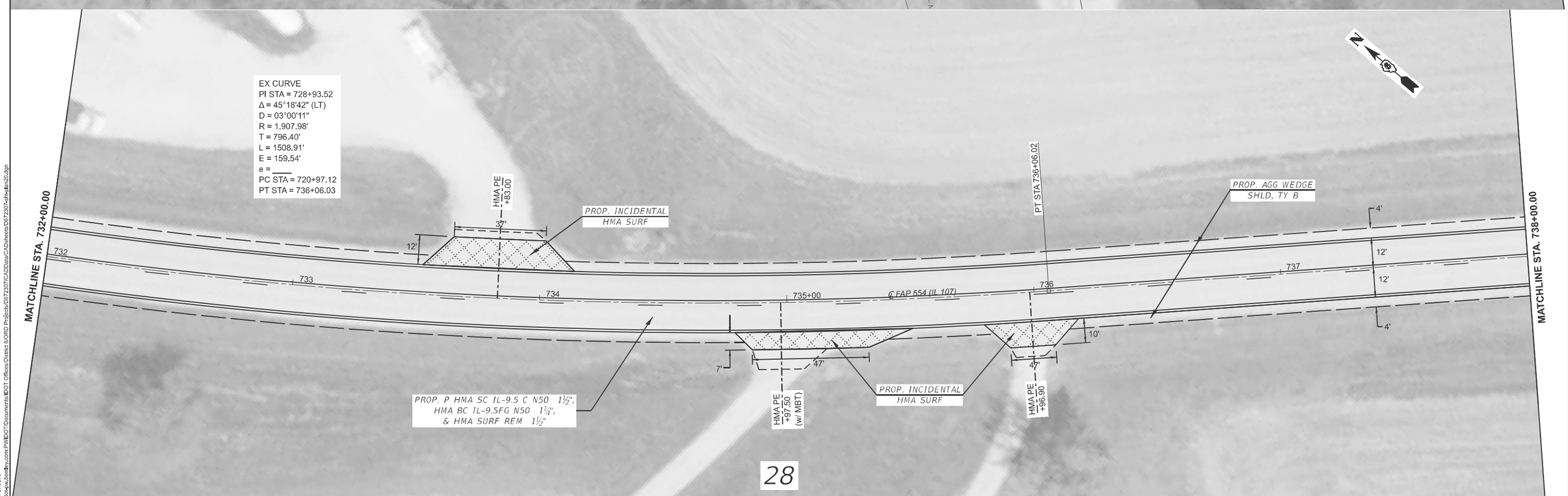

MODEL: 72307 Plan Sheet 8
FILE NAME: pw://ildot-pw.bentley.com:PWIDOT/Documents/IDOT Offices/District 6/ORD Projects/D672307/CADData/CADsheets/D672307-sht-plan20.dgn

USER NAME = rene.cabrera	DESIGNED - RSC	REVISED -	
	DRAWN - RSC	REVISED -	
PLOT SCALE = $SCALE$	CHECKED -	REVISED -	
PLOT DATE = 8/14/2025	DATE -	REVISED -	

STATE OF ILLINOIS
DEPARTMENT OF TRANSPORTATION

PLAN SHEET

SCALE: 20 | SHEET 8 OF 19 SHEETS | STA. 726+00.00 TO STA. 738+00.00

F.A.P. RTE.	SECTION	COUNTY	TOTAL SHEETS	SHEET NO.
554	34RS-5	PIKE	51	30
		CONTRACT NO. 72307		
		ILLINOIS	FED. AID PROJECT	

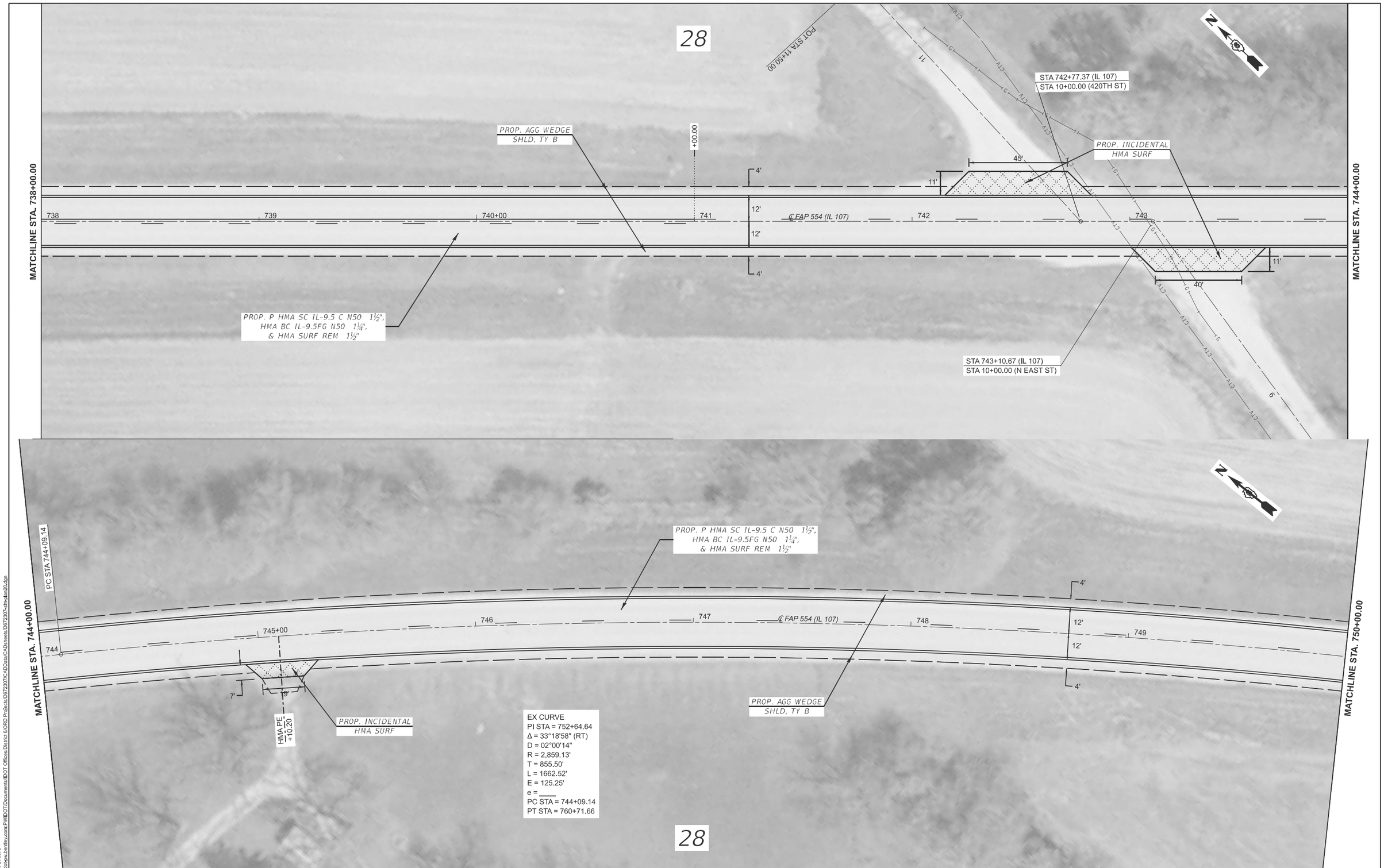

MODEL: 72307 Plan Sheet 9
FILE NAME: pw://ildotwv.bentley.com:PWIDOT/Documents/IDOT Offices/District 6/ORD Projects/D672307/CADData/CADsheets/D672307-sht-plan20.dgn

USER NAME = rene.cabrera	DESIGNED - RSC	REVISED -	
	DRAWN - RSC	REVISED -	
PLOT SCALE = $SCALE$	CHECKED -	REVISED -	
PLOT DATE = 8/14/2025	DATE -	REVISED -	

STATE OF ILLINOIS
DEPARTMENT OF TRANSPORTATION

PLAN SHEET

SCALE: 20 | SHEET 9 OF 15 SHEETS | STA. 738+00.00 TO STA. 750+00.00

F.A.P. RTE.	SECTION	COUNTY	TOTAL SHEETS	SHEET NO.
554	34RS-5	PIKE	51	31

CONTRACT NO. 72307

ILLINOIS | FED. AID PROJECT

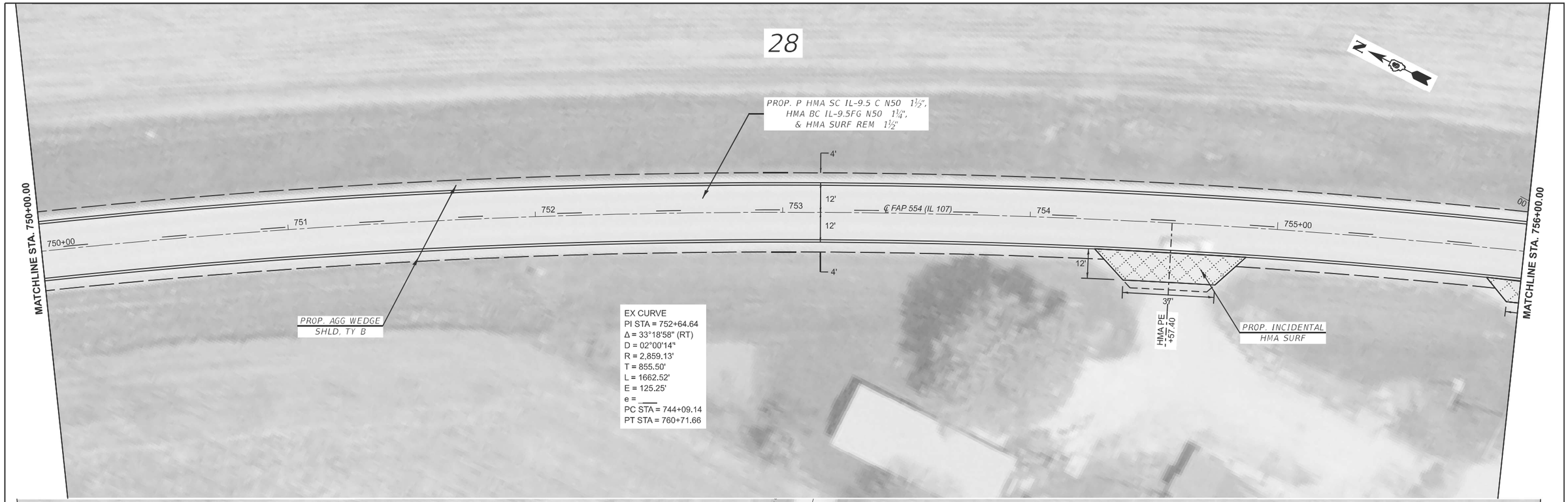

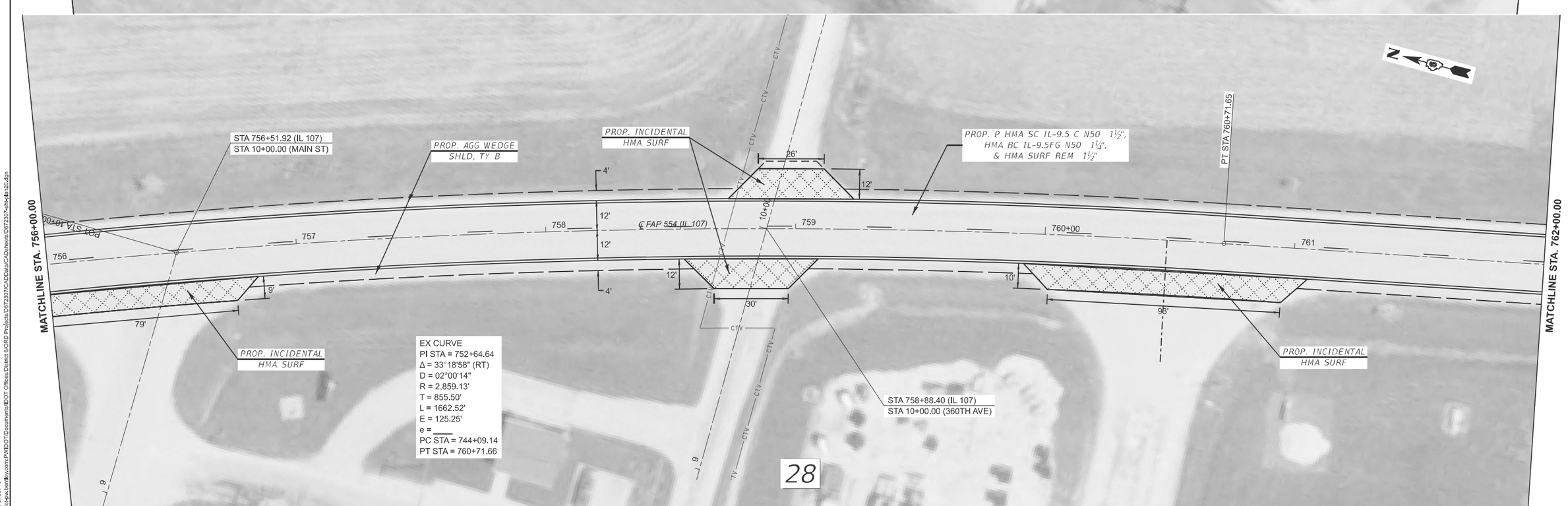

MODEL: 72307 Plan Sheet 10
FILE NAME: pw://ildot-ew.bentley.com:PWIDOT/Documents/IDOT Offices/District 6/ORD Projects/D672307/CADData/CADsheets/D672307-sht-plan20.dgn

USER NAME = rene.cabrera	DESIGNED - RSC	REVISED -	
	DRAWN - RSC	REVISED -	
PLOT SCALE = $SCALE$	CHECKED -	REVISED -	
PLOT DATE = 8/14/2025	DATE -	REVISED -	

STATE OF ILLINOIS
DEPARTMENT OF TRANSPORTATION

PLAN SHEET

SCALE: 20 | SHEET 10 OF 19 SHEETS | STA. 750+00.00 | TO STA. 762+00.00

F.A.P. RTE.	SECTION	COUNTY	TOTAL SHEETS	SHEET NO.
554	34RS-5	PIKE	51	32
		CONTRACT NO. 72307		
		ILLINOIS	FED. AID PROJECT	

MODEL: 72307 Plan Sheet 11
FILE NAME: pw://ildot-pw.bentley.com:PWIDOT/Documents/IDOT Offices/District 6/ORD Projects/D672307/CADData/CADsheets/D672307-sht-plan55.dgn

USER NAME = rene.cabrera	DESIGNED - RSC	REVISED -	
	DRAWN - RSC	REVISED -	
PLOT SCALE = $SCALE$	CHECKED -	REVISED -	
PLOT DATE = 8/14/2025	DATE -	REVISED -	

STATE OF ILLINOIS
DEPARTMENT OF TRANSPORTATION

PLAN SHEET

SCALE: 50 | SHEET 11 OF 15 SHEETS | STA. 762+00.00 TO STA. 792+00.00

F.A.P. RTE.	SECTION	COUNTY	TOTAL SHEETS	SHEET NO.
554	34RS-5	PIKE	51	33
		CONTRACT NO. 72307		
		ILLINOIS	FED. AID PROJECT	

MODEL: 72307 Plan Sheet 12
FILE NAME: pw://bbdesw.bentley.com:PWIDOT/Documents/IDOT Offices/District 6/ORD Projects/D672307/CADData/CADsheets/D672307-sht-plan-050.dgn

USER NAME = rene.cabrera	DESIGNED - RSC	REVISED -	
	DRAWN - RSC	REVISED -	
PLOT SCALE = $SCALE$	CHECKED -	REVISED -	
PLOT DATE = 8/14/2025	DATE -	REVISED -	

STATE OF ILLINOIS
DEPARTMENT OF TRANSPORTATION

PLAN SHEET

SCALE: 50 | SHEET 12 OF 19 SHEETS | STA. 792+00.00 TO STA. 822+00.00

F.A.P. RTE.	SECTION	COUNTY	TOTAL SHEETS	SHEET NO.
554	34RS-5	PIKE	51	34
		CONTRACT NO. 72307		
		ILLINOIS	FED. AID PROJECT	

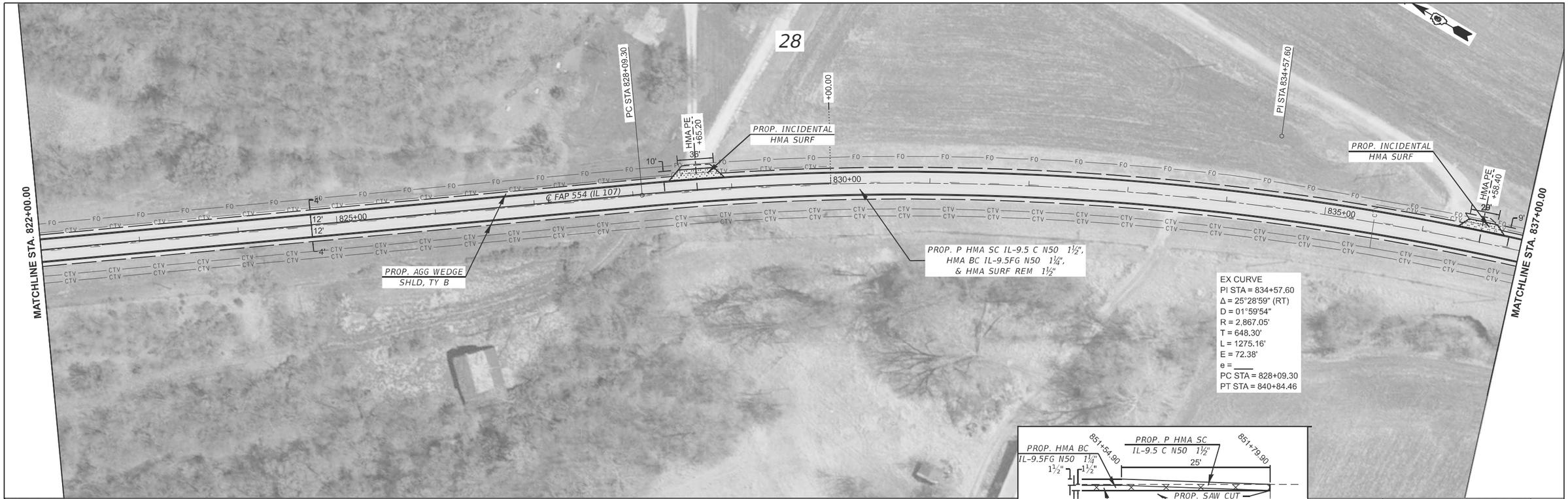

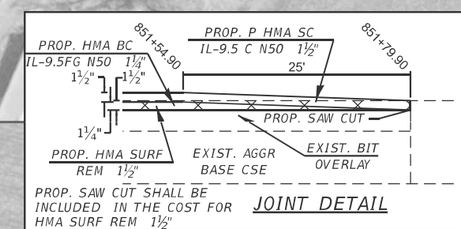

MODEL: 72307 Plan Sheet 13
FILE NAME: pw://ildot-pw.bentley.com:PWIDOT/Documents/IDOT Offices/District 6/ORD Projects/D672307/CADData/CADsheets/D672307-sht-plan50.dgn

USER NAME = rene.cabrera	DESIGNED - RSC	REVISED -	STATE OF ILLINOIS DEPARTMENT OF TRANSPORTATION
	DRAWN - RSC	REVISED -	
PLOT SCALE = $SCALE$	CHECKED -	REVISED -	
PLOT DATE = 9/4/2025	DATE -	REVISED -	

PLAN SHEET

SCALE: 50 | SHEET 13 OF 19 SHEETS | STA. 822+00.00 TO STA. 852+00.00

F.A.P. RTE.	SECTION	COUNTY	TOTAL SHEETS	SHEET NO.
554	34RS-5	PIKE	51	35
		CONTRACT NO. 72307		
		ILLINOIS FED. AID PROJECT		

USER NAME = rene.cabrera	DESIGNED - RSC	REVISED -	
	DRAWN - RSC	REVISED -	
PLOT SCALE = $SCALE$	CHECKED -	REVISED -	
PLOT DATE = 9/4/2025	DATE -	REVISED -	

STATE OF ILLINOIS
DEPARTMENT OF TRANSPORTATION

PLAN SHEET

SCALE: 50 | SHEET 14 OF 19 SHEETS | STA. 852+00.00 TO STA. 882+00.00

F.A.P. RTE.	SECTION	COUNTY	TOTAL SHEETS	SHEET NO.
554	34RS-5	PIKE	51	36

CONTRACT NO. 72307

ILLINOIS | FED. AID PROJECT

MODEL: 72307 Plan Sheet 14
FILE NAME: pw:\\ildot-pw.bentley.com:PWIDOT\Documents\IDOT Offices\District 6\ORD Projects\D672307\CADData\CADsheets\D672307-sht-ln-sht56.dgn

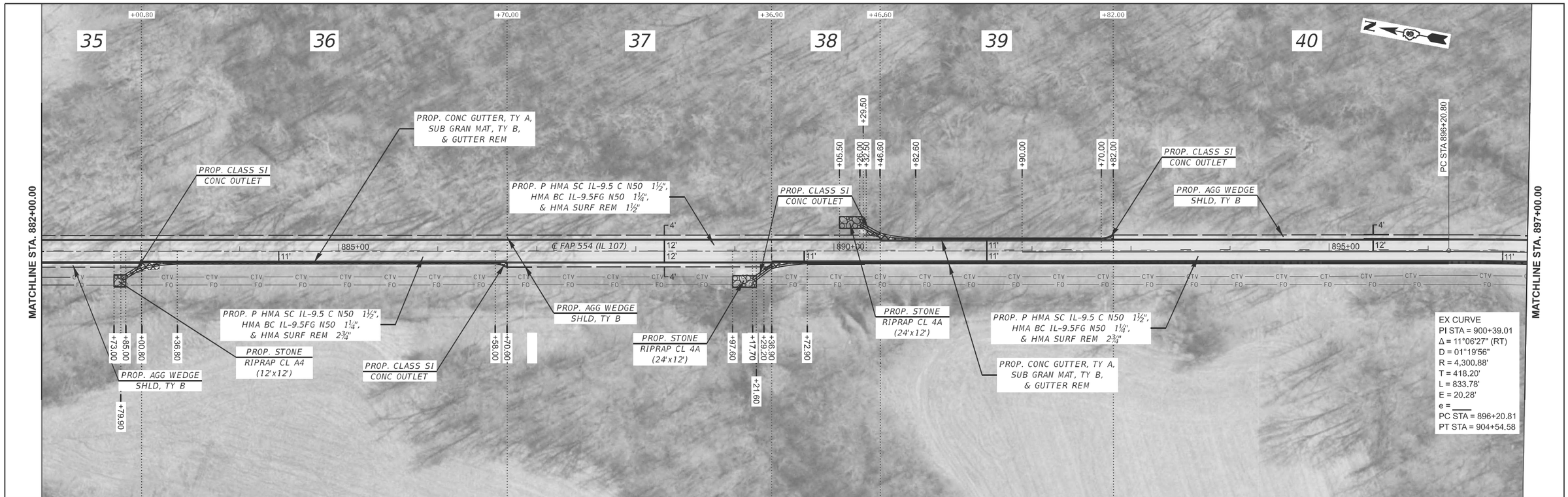

MODEL: 72307 Plan Sheet 15
FILE NAME: pw://bbcq-pw.bentley.com:PWIDOT/Documents/IDOT Offices/District 6/ORD Projects/D672307/CADData/CADsheets/D672307-sht-plan55.dgn

USER NAME = rene.cabrera	DESIGNED - RSC	REVISED -	
	DRAWN - RSC	REVISED -	
PLOT SCALE = $SCALE$	CHECKED -	REVISED -	
PLOT DATE = 8/14/2025	DATE -	REVISED	

STATE OF ILLINOIS
DEPARTMENT OF TRANSPORTATION

PLAN SHEET

SCALE: 50 | SHEET 15 OF 19 SHEETS | STA. 882+00.00 TO STA. 912+00.00

F.A.P. RTE.	SECTION	COUNTY	TOTAL SHEETS	SHEET NO.
554	34RS-5	PIKE	51	37
		CONTRACT NO. 72307		
		ILLINOIS FED. AID PROJECT		

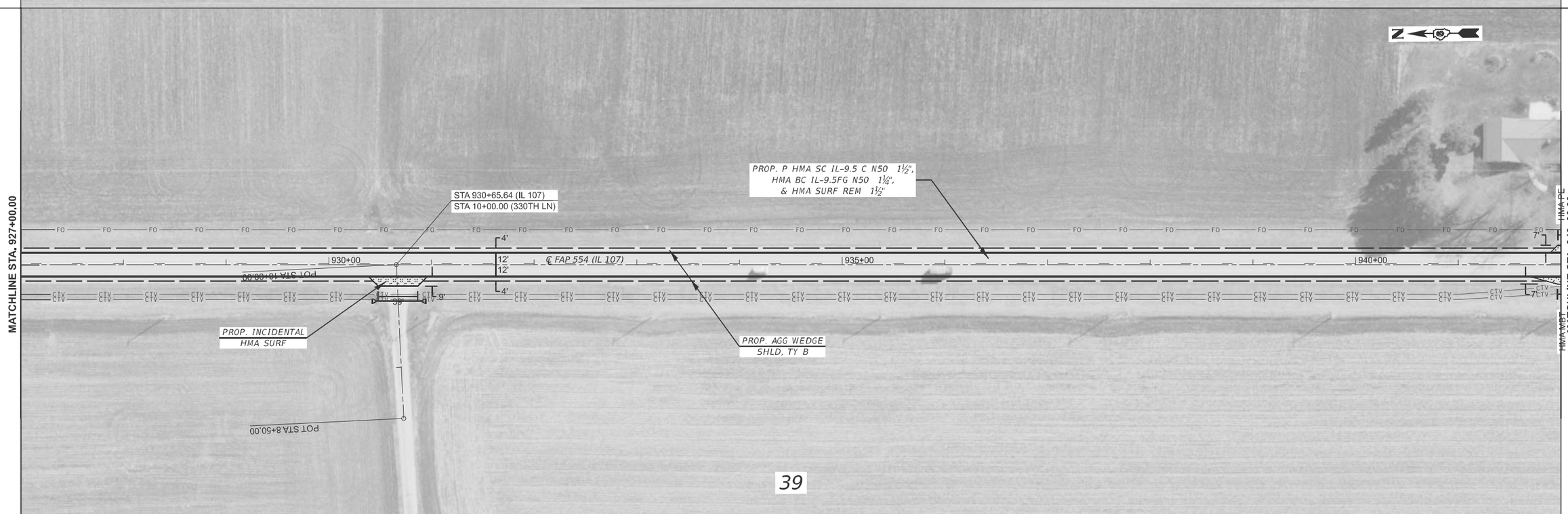

MODEL: 72307 Plan Sheet 16
FILE NAME: pw://ildot-pw.bentley.com:PWIDOT/Documents/IDOT Offices/District 6/ORD Projects/D672307/CADData/CADsheets/D672307-sht-plan50.dgn

USER NAME = rene.cabrera	DESIGNED - RSC	REVISED -	
	DRAWN - RSC	REVISED -	
PLOT SCALE = $SCALE$	CHECKED -	REVISED -	
PLOT DATE = 8/13/2025	DATE -	REVISED -	

STATE OF ILLINOIS
DEPARTMENT OF TRANSPORTATION

PLAN SHEET

SCALE: 50 | SHEET 16 OF 19 SHEETS | STA. 912+00.00 TO STA. 942+00.00

F.A.P. RTE.	SECTION	COUNTY	TOTAL SHEETS	SHEET NO.
554	34RS-5	PIKE	51	38

CONTRACT NO. 72307

ILLINOIS | FED. AID PROJECT

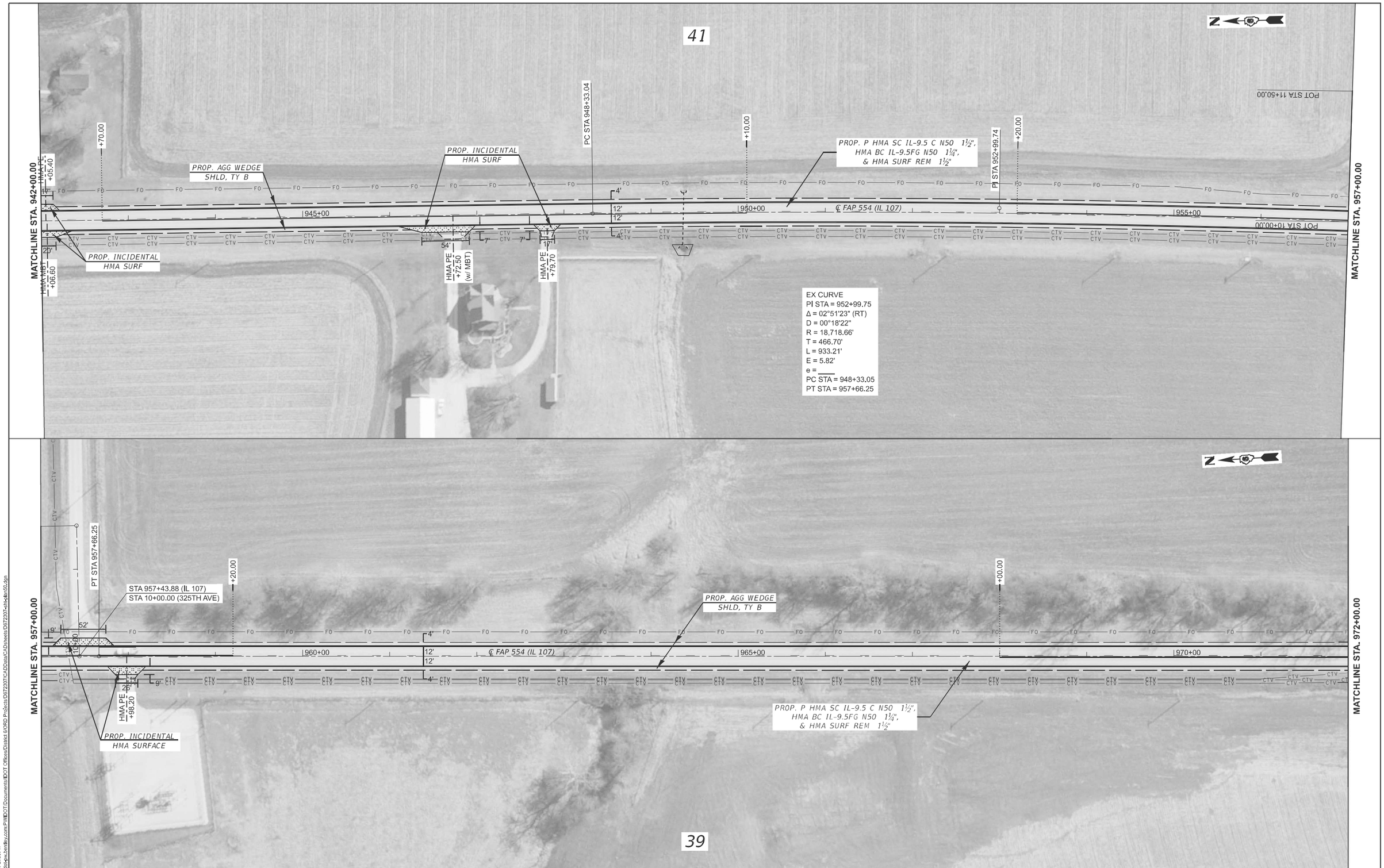

USER NAME = rene.cabrera	DESIGNED - RSC	REVISED -	
	DRAWN - RSC	REVISED -	
PLOT SCALE = $SCALE$	CHECKED -	REVISED -	
PLOT DATE = 8/14/2025	DATE -	REVISED -	

STATE OF ILLINOIS
DEPARTMENT OF TRANSPORTATION

PLAN SHEET

SCALE: 50 | SHEET 17 OF 19 SHEETS | STA. 942+00.00 TO STA. 972+00.00

F.A.P. RTE.	SECTION	COUNTY	TOTAL SHEETS	SHEET NO.
554	34RS-5	PIKE	51	39

CONTRACT NO. 72307

ILLINOIS | FED. AID PROJECT

MODEL: 72307 Plan Sheet 17
FILE NAME: pw://bbdesw.bentley.com:PWIDOT:Documents:IDOT Offices:District 6:ORD Projects:D672307:CADData:CADsheets:D672307-sht-plan50.dgn

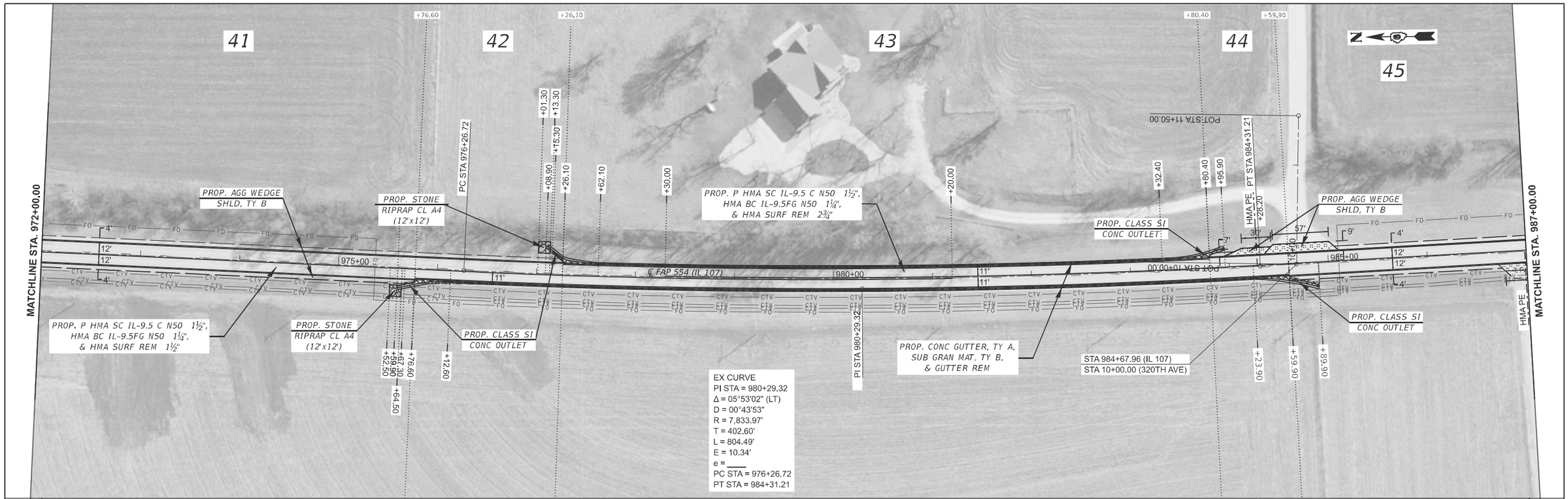

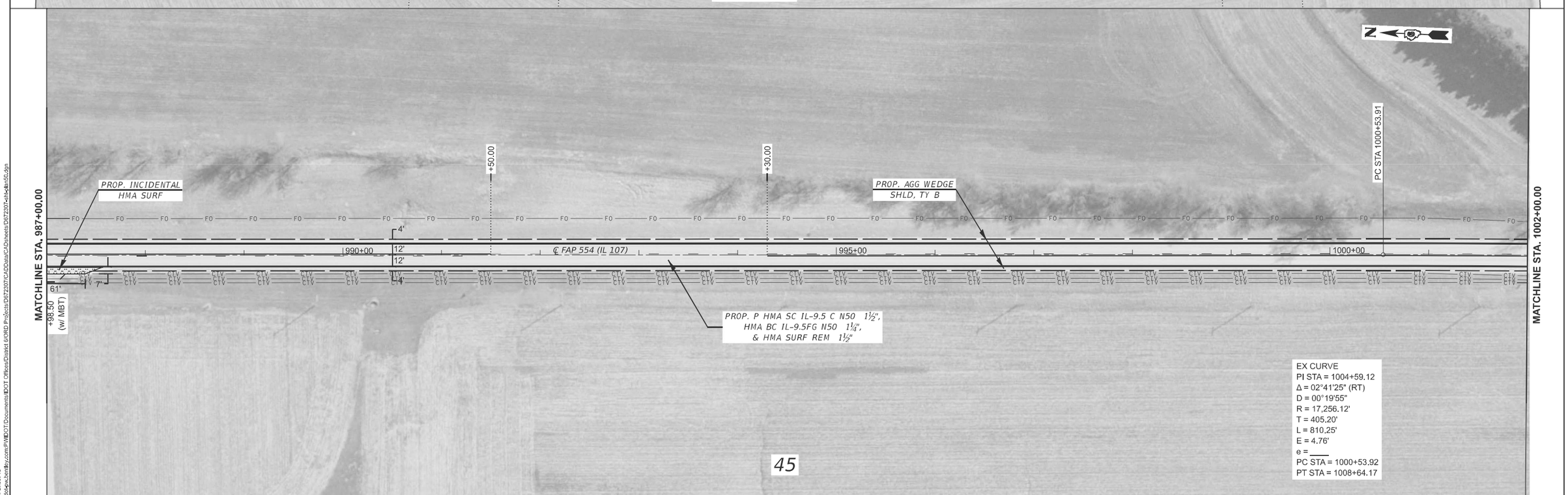

MODEL: 72307 Plan Sheet 18
FILE NAME: pw://bbdesw.bentley.com:PWIDOT\Documents\IDOT Offices\District 9\ORD Projects\D072307\CADData\CADsheets\D072307-sht-ln50.dgn

USER NAME = rene.cabrera	DESIGNED - RSC	REVISED -	
	DRAWN - RSC	REVISED -	
PLOT SCALE = $SCALE$	CHECKED -	REVISED -	
PLOT DATE = 8/14/2025	DATE -	REVISED -	

STATE OF ILLINOIS
DEPARTMENT OF TRANSPORTATION

PLAN SHEET

SCALE: 50 | SHEET 18 OF 19 SHEETS | STA. 972+00.00 TO STA. 1020+00.00

F.A.P. RTE.	SECTION	COUNTY	TOTAL SHEETS	SHEET NO.
554	34RS-5	PIKE	51	40

CONTRACT NO. 72307

ILLINOIS | FED. AID PROJECT

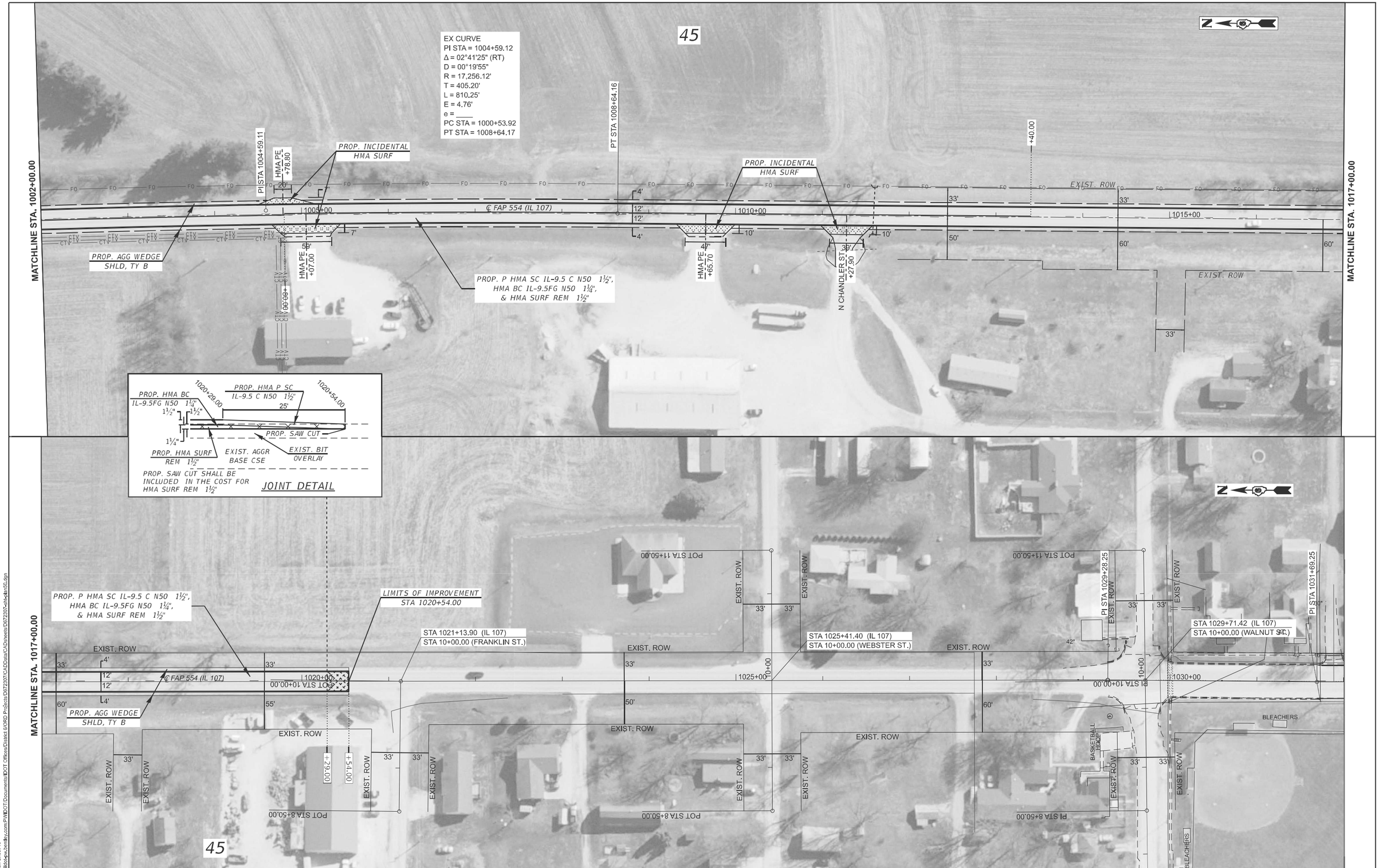

USER NAME = rene.cabrera	DESIGNED - RSC	REVISED -
	DRAWN - RSC	REVISED -
PLOT SCALE = $SCALE$	CHECKED -	REVISED -
PLOT DATE = 9/4/2025	DATE -	REVISED -

STATE OF ILLINOIS
DEPARTMENT OF TRANSPORTATION

PLAN SHEET

SCALE: 50 | SHEET 19 OF 19 SHEETS | STA. 1002+00.00 TO STA. 1032+00.00

F.A.P. RTE.	SECTION	COUNTY	TOTAL SHEETS	SHEET NO.
554	34RS-5	PIKE	51	41

CONTRACT NO. 72307

ILLINOIS | FED. AID PROJECT

MODEL: 72307 Plan Sheet 19
FILE NAME: pw://ildot-pw.bentley.com:PWIDOT/Documents/IDOT Offices/District 6/ORD Projects/D672307/CADData/CADsheets/D672307-sht1-sht55.dgn

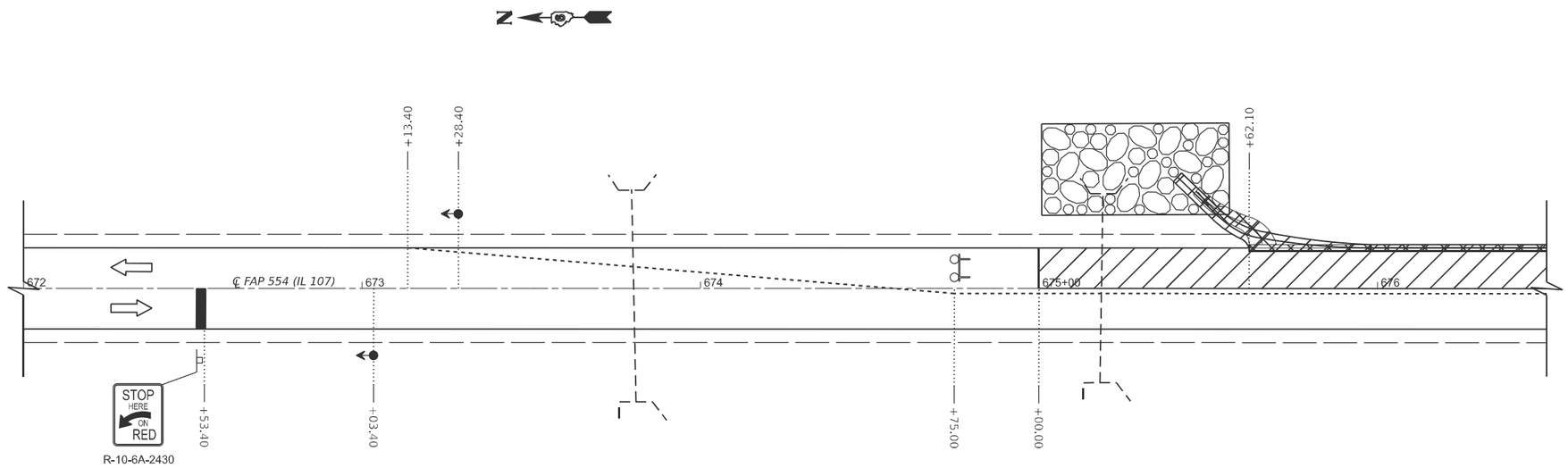

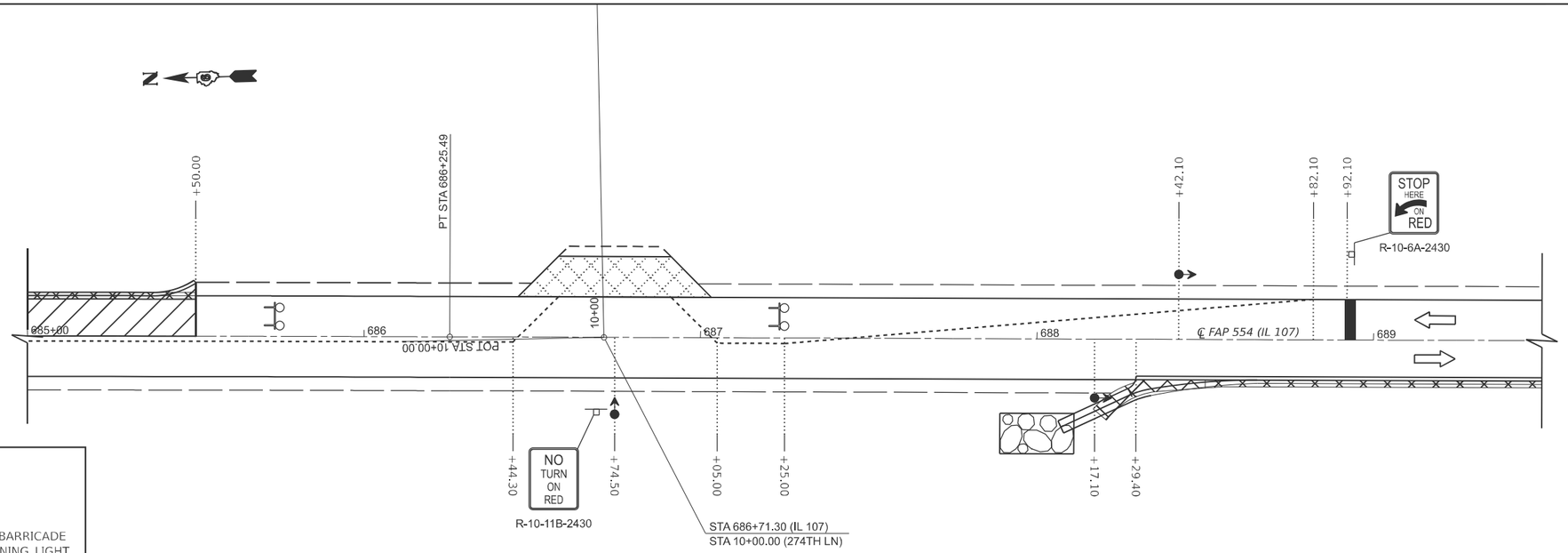

SYMBOLS

- WORK AREA
- DRUM OR TYPE II BARRICADE WITH STEADY BURNING LIGHT
- SIGN ON PERMANENT SUPPORT
- TRAFFIC SIGNAL
- TYPE III BARRICADE WITH FLASHING LIGHTS

TRAFFIC CONTROL NOTES:

1. *THIS TRAFFIC CONTROL PLAN SHALL BE USED IN CONJUNCTION WITH STANDARD 701316. WITH THE EXCEPTION OF TEMPORARY RUMBLE STRIPS, TEMPORARY SIGNING, AND TEMPORARY PAVEMENT MARKING SHALL BE INSTALLED IN ACCORDANCE WITH STANDARD 701316 OR AS DIRECTED BY THE ENGINEER.*
2. *TRAFFIC CONTROL SHALL BE MIRRORED FOR SWITCH TO OPPOSING STAGE.*

MODEL: IL 108 - Plan 1 [Sheet]
FILE NAME: c:\pw_work\pwidot\cabrerars\d0806269\D672307-sht-trafcntl.dgn

USER NAME = rene.cabrera	DESIGNED - RSC	REVISED -	
	DRAWN - RSC	REVISED -	
	CHECKED -	REVISED -	
PLOT DATE = 8/13/2025	DATE -	REVISED -	

STATE OF ILLINOIS
DEPARTMENT OF TRANSPORTATION

TRAFFIC CONTROL STAGING
(LOCATION 1)

SCALE: 20 | SHEET 1 OF 5 SHEETS | STA. 672+00.00 TO STA. 689+50.00

F.A.P. RTE.	SECTION	COUNTY	TOTAL SHEETS	SHEET NO.
554	34RS-5	PIKE	51	42

CONTRACT NO. 72307

ILLINOIS | FED. AID PROJECT

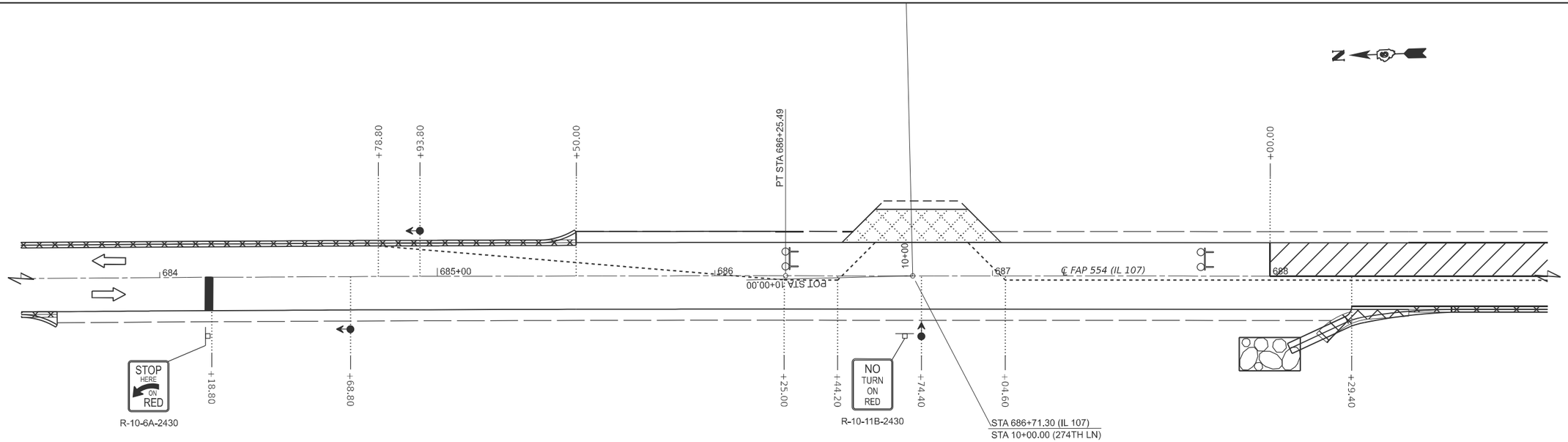

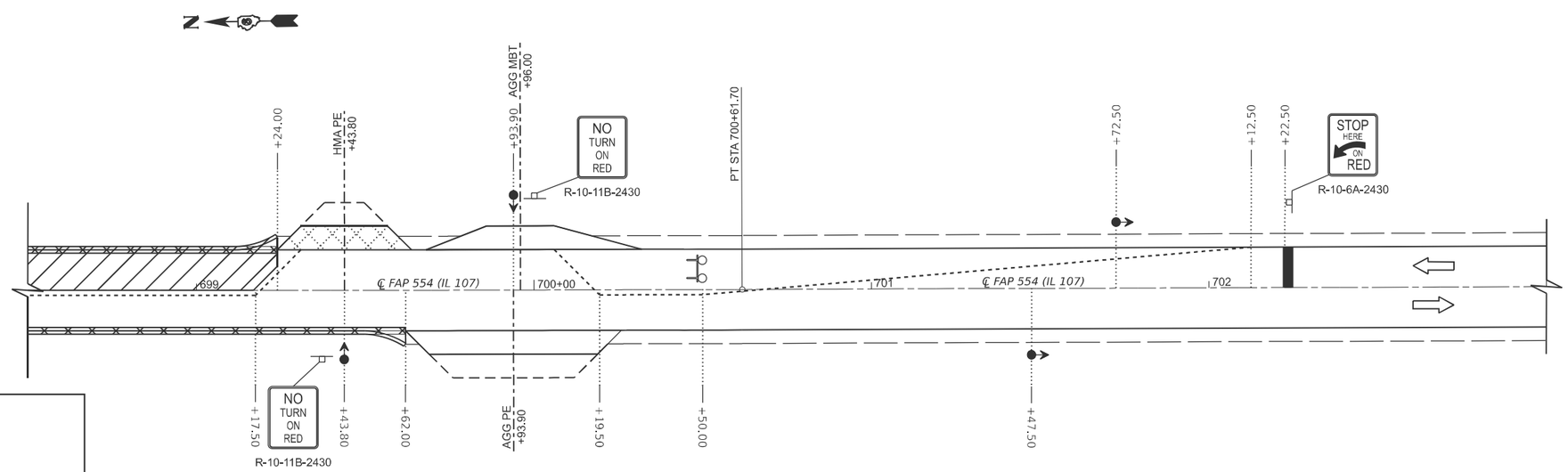

SYMBOLS

- WORK AREA
- DRUM OR TYPE II BARRICADE WITH STEADY BURNING LIGHT
- SIGN ON PERMANENT SUPPORT
- TRAFFIC SIGNAL
- TYPE III BARRICADE WITH FLASHING LIGHTS

TRAFFIC CONTROL NOTES:

1. *THIS TRAFFIC CONTROL PLAN SHALL BE USED IN CONJUNCTION WITH STANDARD 701316. WITH THE EXCEPTION OF TEMPORARY RUMBLE STRIPS, TEMPORARY SIGNING, AND TEMPORARY PAVEMENT MARKING SHALL BE INSTALLED IN ACCORDANCE WITH STANDARD 701316 OR AS DIRECTED BY THE ENGINEER.*
2. *TRAFFIC CONTROL SHALL BE MIRRORED FOR SWITCH TO OPPOSING STAGE.*

MODEL: IL 108 - traffic control [Sheet]
FILE NAME: c:\pw_work\pwidot\cabrerars\d0806269\D672307-sht-trafcntrl.dgn

USER NAME = rene.cabrera	DESIGNED - RSC	REVISED -	STATE OF ILLINOIS DEPARTMENT OF TRANSPORTATION
	DRAWN - RSC	REVISED -	
	CHECKED -	REVISED -	
PLOT DATE = 8/13/2025	DATE -	REVISED -	

TRAFFIC CONTROL STAGING (LOCATION 2)

SCALE: 20 | SHEET 2 OF 5 SHEETS | STA. 683+50.00 TO STA. 703+00.00

F.A.P. RTE.	SECTION	COUNTY	TOTAL SHEETS	SHEET NO.
554	34RS-5	PIKE	51	43

CONTRACT NO. 72307

ILLINOIS | FED. AID PROJECT

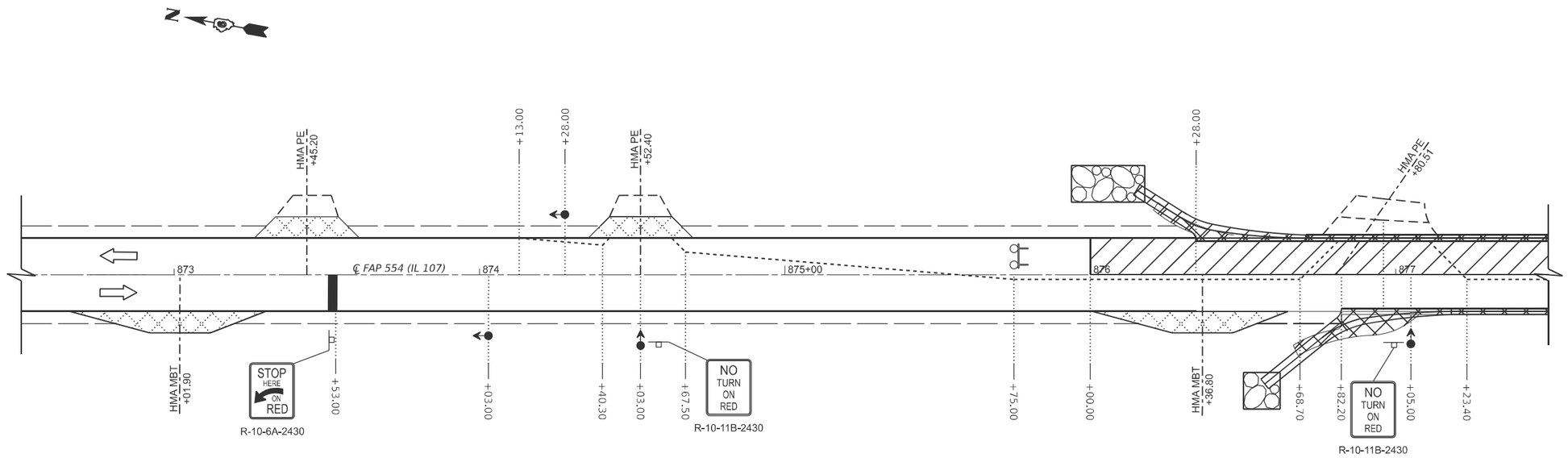

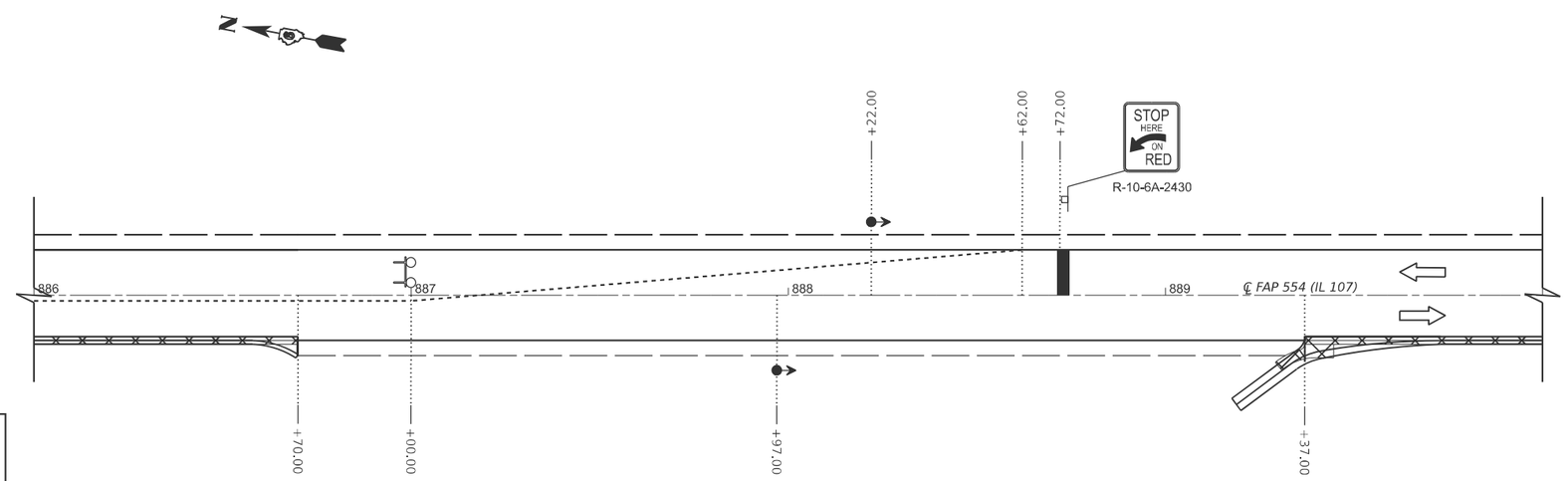

SYMBOLS

- WORK AREA
- DRUM OR TYPE II BARRICADE WITH STEADY BURNING LIGHT
- SIGN ON PERMANENT SUPPORT
- TRAFFIC SIGNAL
- TYPE III BARRICADE WITH FLASHING LIGHTS

TRAFFIC CONTROL NOTES:

1. *THIS TRAFFIC CONTROL PLAN SHALL BE USED IN CONJUNCTION WITH STANDARD 701316. WITH THE EXCEPTION OF TEMPORARY RUMBLE STRIPS, TEMPORARY SIGNING, AND TEMPORARY PAVEMENT MARKING SHALL BE INSTALLED IN ACCORDANCE WITH STANDARD 701316 OR AS DIRECTED BY THE ENGINEER.*
2. *TRAFFIC CONTROL SHALL BE MIRRORED FOR SWITCH TO OPPOSING STAGE.*

MODEL: IL 108 - traffic control-3 [Sheet]
FILE NAME: c:\pw_work\pwidot\cabrerarsd0806269\D672307-sht-trafcntrl.dgn

USER NAME = rene.cabrera	DESIGNED - RSC	REVISED -	
	DRAWN - RSC	REVISED -	
	CHECKED -	REVISED -	
PLOT DATE = 8/13/2025	DATE -	REVISED -	

STATE OF ILLINOIS
DEPARTMENT OF TRANSPORTATION

TRAFFIC CONTROL STAGING
(LOCATION 3)

SCALE: 20 | SHEET 3 OF 5 SHEETS | STA. 872+50.00 TO STA. 890+00.00

F.A.P. RTE.	SECTION	COUNTY	TOTAL SHEETS	SHEET NO.
554	34RS-5	PIKE	51	44

CONTRACT NO. 72307

ILLINOIS | FED. AID PROJECT

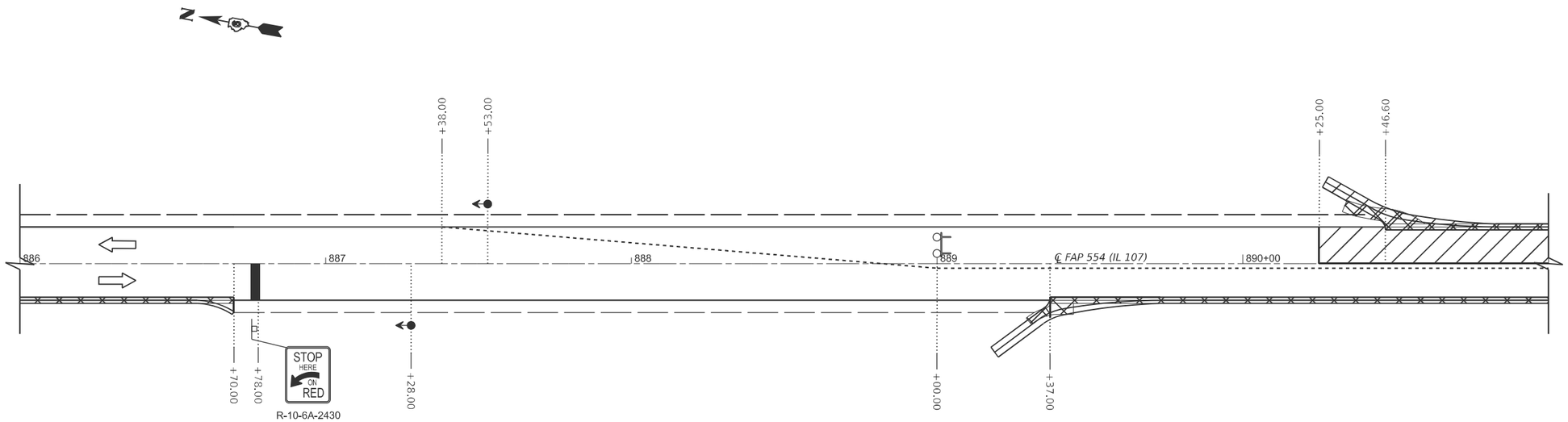

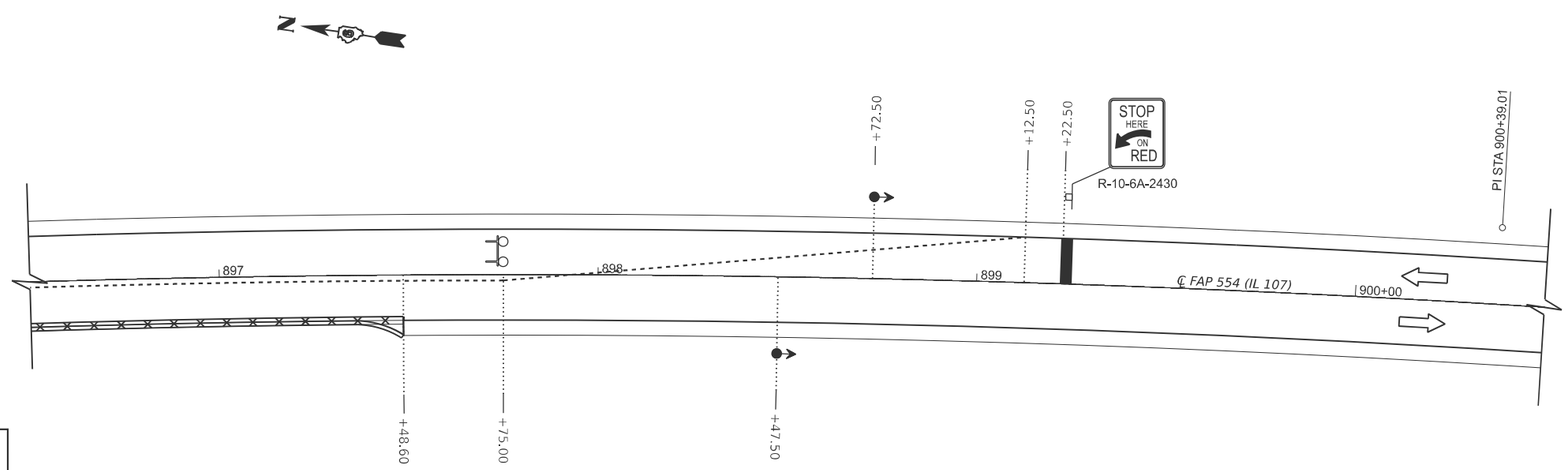

SYMBOLS

- WORK AREA
- DRUM OR TYPE II BARRICADE WITH STEADY BURNING LIGHT
- SIGN ON PERMANENT SUPPORT
- TRAFFIC SIGNAL
- TYPE III BARRICADE WITH FLASHING LIGHTS

TRAFFIC CONTROL NOTES:

1. *THIS TRAFFIC CONTROL PLAN SHALL BE USED IN CONJUNCTION WITH STANDARD 701316. WITH THE EXCEPTION OF TEMPORARY RUMBLE STRIPS, TEMPORARY SIGNING, AND TEMPORARY PAVEMENT MARKING SHALL BE INSTALLED IN ACCORDANCE WITH STANDARD 701316 OR AS DIRECTED BY THE ENGINEER.*
2. *TRAFFIC CONTROL SHALL BE MIRRORED FOR SWITCH TO OPPOSING STAGE.*

MODEL: IL 108 - traffic control-5 [Sheet]
FILE NAME: c:\pw_work\pwidot\cabrerarsr\d0806269\D672307-sht-trafcntrl.dgn

USER NAME = rene.cabrera	DESIGNED - RSC	REVISED -	
	DRAWN - RSC	REVISED -	
	CHECKED -	REVISED -	
PLOT DATE = 8/13/2025	DATE -	REVISED -	

STATE OF ILLINOIS
DEPARTMENT OF TRANSPORTATION

TRAFFIC CONTROL STAGING
(LOCATION 4)

SCALE: 20 | SHEET 4 OF 5 SHEETS | STA. 886+00.00 TO STA. 900+50.00

F.A.P. RTE.	SECTION	COUNTY	TOTAL SHEETS	SHEET NO.
554	34RS-5	PIKE	51	45

CONTRACT NO. 72307

ILLINOIS | FED. AID PROJECT

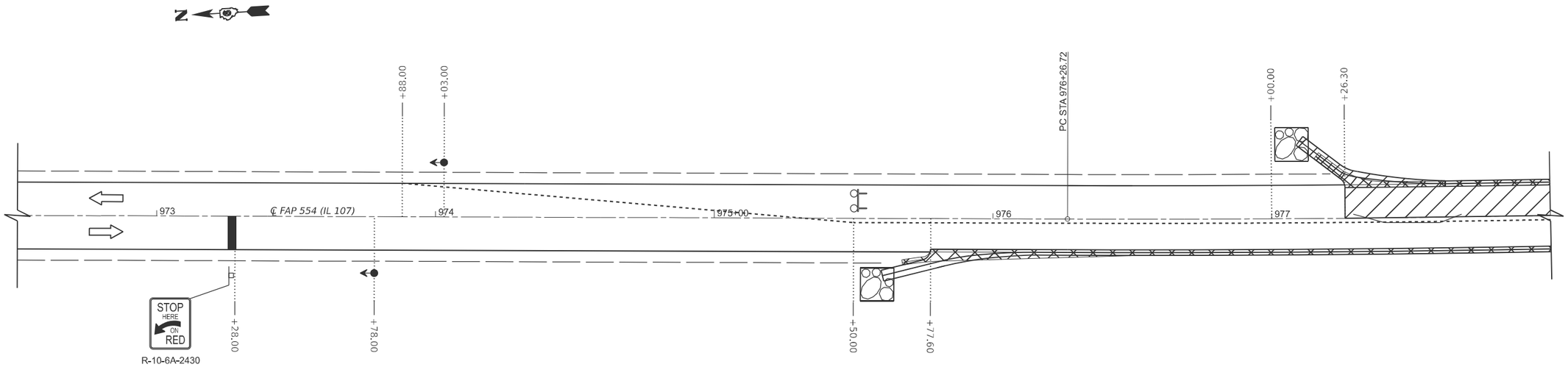

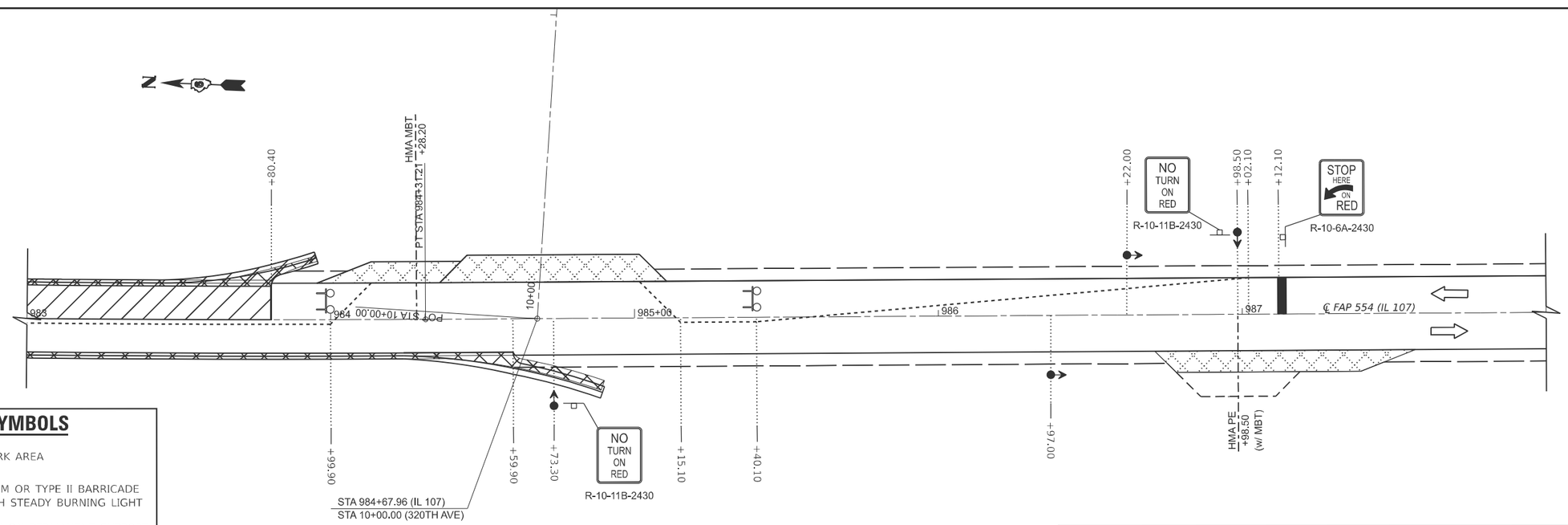

SYMBOLS

- WORK AREA
- DRUM OR TYPE II BARRICADE WITH STEADY BURNING LIGHT
- SIGN ON PERMANENT SUPPORT
- TRAFFIC SIGNAL
- TYPE III BARRICADE WITH FLASHING LIGHTS

TRAFFIC CONTROL NOTES:

1. *THIS TRAFFIC CONTROL PLAN SHALL BE USED IN CONJUNCTION WITH STANDARD 701316. WITH THE EXCEPTION OF TEMPORARY RUMBLE STRIPS, TEMPORARY SIGNING, AND TEMPORARY PAVEMENT MARKING SHALL BE INSTALLED IN ACCORDANCE WITH STANDARD 701316 OR AS DIRECTED BY THE ENGINEER.*
2. *TRAFFIC CONTROL SHALL BE MIRRORED FOR SWITCH TO OPPOSING STAGE.*

MODEL: IL 109 - Plan 4 [Sheet]
FILE NAME: c:\pw_work\pwidot\cabrerars\d0806269\D672307-sht-trafcntl.dgn

USER NAME = rene.cabrera	DESIGNED - RSC	REVISED -	
	DRAWN - RSC	REVISED -	
	CHECKED -	REVISED -	
PLOT DATE = 8/13/2025	DATE -	REVISED -	

STATE OF ILLINOIS
DEPARTMENT OF TRANSPORTATION

TRAFFIC CONTROL STAGING
(LOCATION 5)

SCALE: 20 | SHEET 5 OF 5 SHEETS | STA. 884+50.00 TO STA. 988+00.00

F.A.P. RTE.	SECTION	COUNTY	TOTAL SHEETS	SHEET NO.
554	34RS-5	PIKE	51	46

CONTRACT NO. 72307

ILLINOIS | FED. AID PROJECT

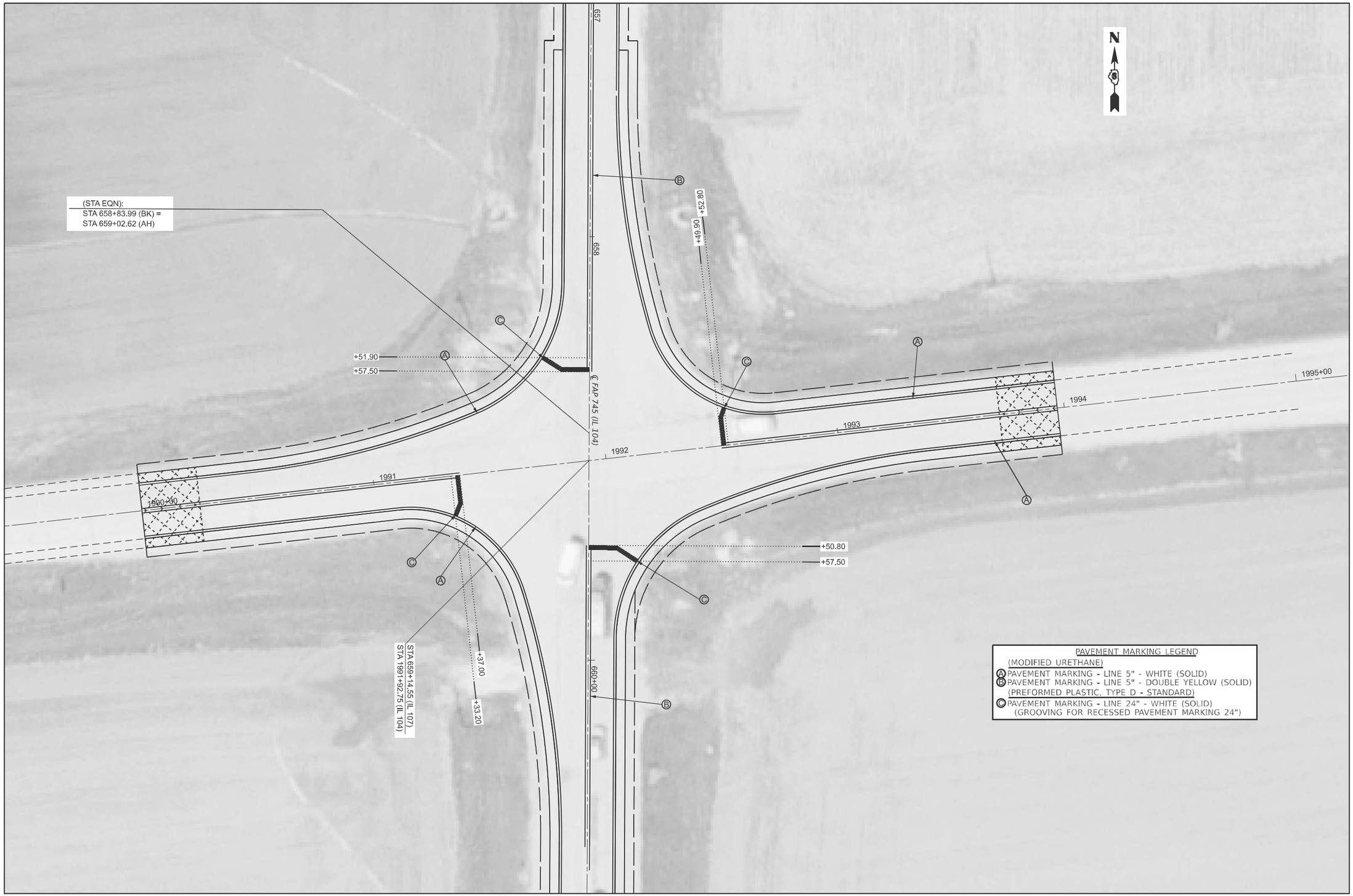

MODEL: IL 107 - Plan Sheet 1 [Sheet]
FILE NAME: c:\pw_work\pwidot\cabrerars\d0806269\D672307-sht-plan20pmk.dgn

USER NAME = rene.cabrera	DESIGNED -	REVISED -	
	DRAWN -	REVISED -	
	CHECKED -	REVISED -	
PLOT DATE = 8/12/2025	DATE -	REVISED -	

STATE OF ILLINOIS
DEPARTMENT OF TRANSPORTATION

PAVEMENT MARKING DETAIL

SCALE: 20 | SHEET 1 OF 1 SHEETS | STA. 657+00.00 TO STA. 661+00.00

F.A.P. RTE.	SECTION	COUNTY	TOTAL SHEETS	SHEET NO.
554	34RS-5	PIKE	51	47

CONTRACT NO. 72307

ILLINOIS | FED. AID PROJECT

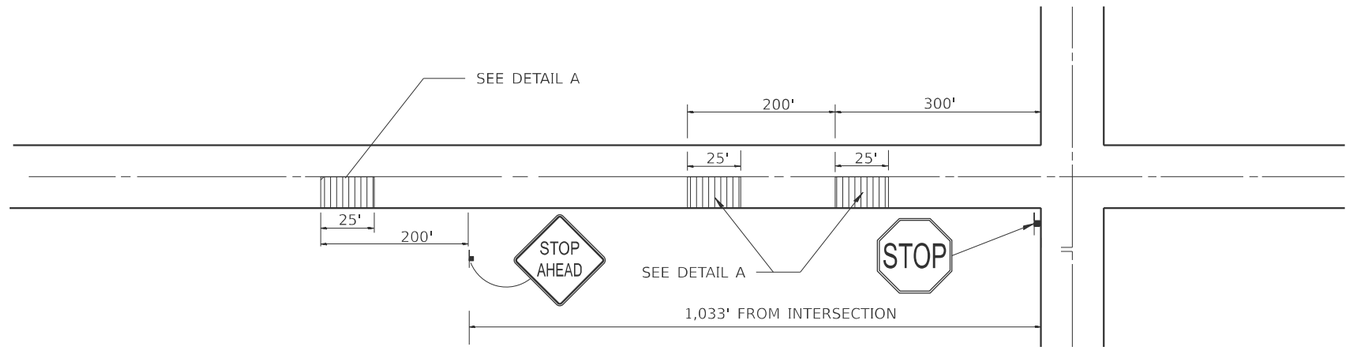

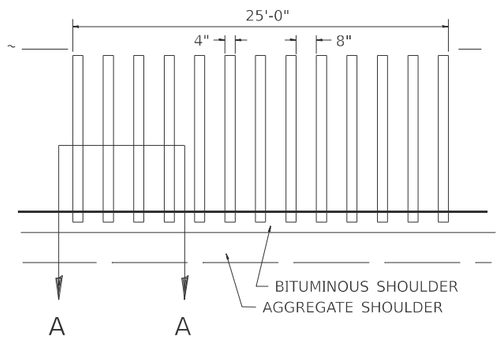

DETAIL A

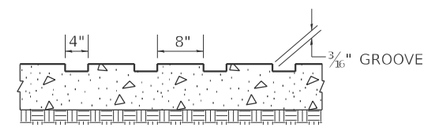

SECTION A-A

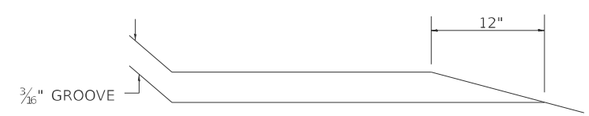

NOTES:

1. THE 25 FEET RUMBLE AREA HAS 4" WIDE GROOVES SAWED INTO THE PAVEMENT, SEPERATED BY 8" OF EXISTING PAVEMENT. THE SAW CUTS SHALL EXTEND 12" INTO THE SHOULDER TO ALLOW FOR DRAINAGE.

2. THIS WORK WILL BE MEASURED FOR PAYMENT AND PAID FORAT THE CONTRACT UNIT PRICE PER EACH FOR RUMBLE STRIP, WHERE EACH IS DEFINED AS A 25 FT LENGTH INSTALLATION. THE UNIT PRICE SHALL INCLUDE ALL EQUIPMENT, MATERIAL, LABOR AND OTHER ITEMS REQUIRED TO INSTALL EACH RUMBLE STRIP.

RUMBLE RESURFACING DETAIL

MODEL: Rumble Strip Detail [Sheet]
FILE NAME: c:\pw_work\pwidot\cabrerars\d0806269\D672307-sht-details.dgn

USER NAME = rene.cabrera	DESIGNED -	REVISED -	
	DRAWN -	REVISED -	
	CHECKED -	REVISED -	
PLOT DATE = 8/13/2025	DATE -	REVISED -	

STATE OF ILLINOIS
DEPARTMENT OF TRANSPORTATION

PERMANENT RUMBLE STRIP APPLICATION (TYPICAL)

SCALE: NTS | SHEET 1 OF 1 SHEETS | STA. | TO STA.

F.A.P. RTE.	SECTION	COUNTY	TOTAL SHEETS	SHEET NO.
554	34RS-5	PIKE	51	48
		CONTRACT NO. 72307		
		ILLINOIS	FED. AID PROJECT	

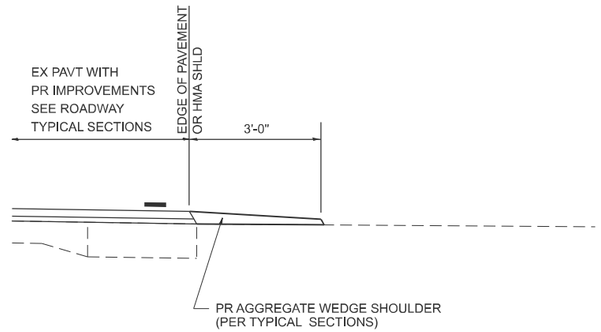

SECTION A-A FOR EX EARTH/ AGGREGATE FE

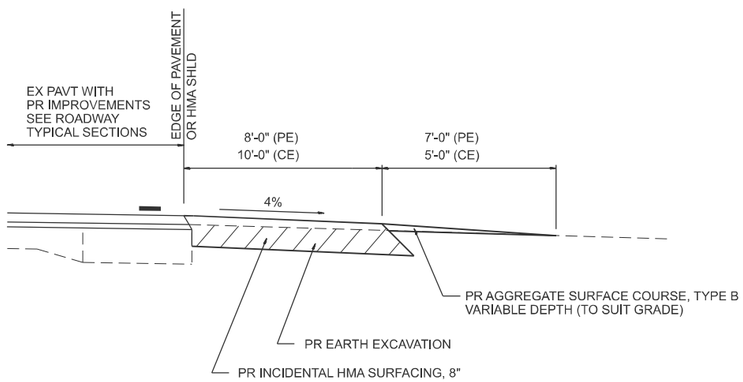

SECTION A-A FOR EX EARTH/AGGREGATE PE, CE, & SIDE ROAD

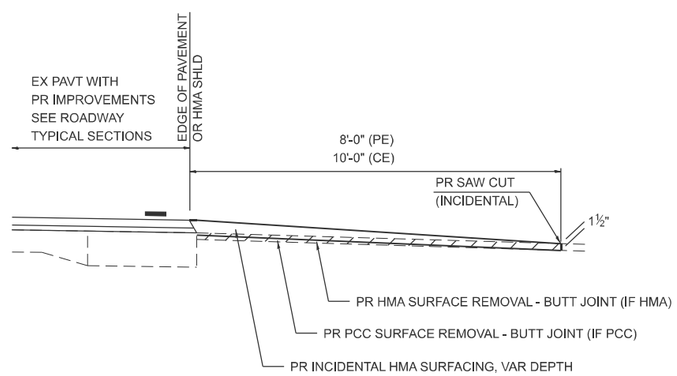

SECTION A-A FOR EX BITUMINOUS/ PC CONCRETE PE, CE & SIDE ROAD

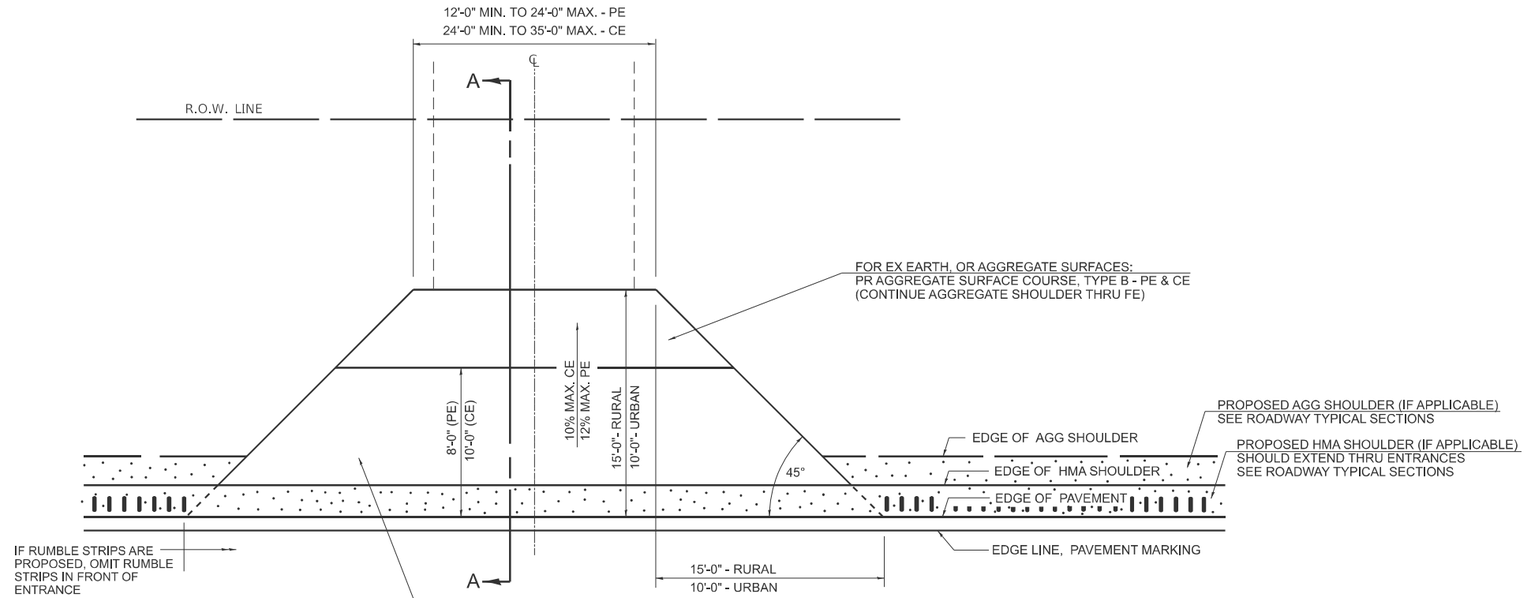

FOR EX EARTH OR AGGREGATE SURFACES:
PR AGGREGATE SHOULDER THRU FE
PR INCIDENTAL HMA SURFACING, 8" (PE & CE)

FOR EX HMA CONCRETE SURFACES:
PR HMA SURFACE REMOVAL - BUTT JOINT

FOR EX PCC SURFACES:
PR PCC SURFACE REMOVAL - BUTT JOINT

FOR ENTRANCE LAYOUT DIMENSIONS
AND SECTION A-A, REFER TO THE
SCHEDULES IN THE PLANS

PLAN - ENTRANCE

GENERAL NOTES:

THE RESIDENT ENGINEER WILL DETERMINE THE EXACT TYPE OF IMPROVEMENT TO BE COMPLETED FOR ALL ENTRANCES, SIDEROADS, AND MAILBOX TURNOUTS ON THIS PROJECT.

THE PLAN DETAILS AND SCHEDULES SHOULD BE USED AS A GUIDE FOR THE ENGINEER TO IMPLEMENT THE FINAL DESIGN. THE ENGINEER MAY DECIDE TO SALVAGE PORTIONS OF THE EXISTING ENTRANCE PAVEMENT STRUCTURE, THEREBY REDUCING PAY ITEM QUANTITIES. NO ADDITIONAL PAYMENT WILL BE ALLOWED FOR THIS REDUCTION IN QUANTITIES.

ANY WORK THE ENGINEER REQUIRES WHICH IS NOT COVERED BY A PAY ITEM CONTAINED IN THE PLANS WILL BE PAID FOR ACCORDING TO ARTICLE 109.04 OF THE STANDARD SPECIFICATIONS.

INCIDENTAL HMA SURFACING REQUIRED TO CONSTRUCT THE ENTRANCES SHALL BE PLACED ACCORDING TO THE APPLICABLE PORTIONS OF SECTION 406 AND 408 OF THE STANDARD SPECIFICATIONS AND AS DIRECTED BY THE ENGINEER.

WHEN THE INCIDENTAL HMA SURFACING PROPOSED FOR THE IMPROVEMENT IS THICKER THAN 3 INCHES,THE CONTRACTOR WILL BE REQUIRED TO PLACE MORE THAN ONE LIFT. THE BOTTOM LIFT(S) SHALL MEET THE REQUIREMENTS OF HMA BASE COURSE IN SECTION 406 OF THE STANDARD SPECIFICATIONS AND THE TOP LIFT OF 1 1/2" INCHES SHALL MEET THE REQUIREMENTS OF HMA INCIDENTAL SURFACING.

THIS WORK WILL BE PAID FOR ACCORDING TO SECTIONS 351, 358, 408, 423 AND 440 OF THE STANDARD SPECIFICATIONS.

UPDATED 7/30/2025

400-ent_ppp

MODEL: Sheet 1 [Sheet]
FILE NAME: c:\pw_work\pwidot\cabrerars\d0806269\D672307-sht-details.dgn

USER NAME = rene.cabrera	DESIGNED -	REVISED -	
	DRAWN -	REVISED -	
	CHECKED -	REVISED -	
PLOT DATE = 8/13/2025	DATE -	REVISED -	

STATE OF ILLINOIS
DEPARTMENT OF TRANSPORTATION

DISTRICT 6 DETAILS FOR RURAL/URBAN ENTRANCE & MAILBOX TURNOUT & SIDEROADS W/O CURB & GUTTER SECTION (3P - PROJECTS)

SCALE: NTS | SHEET 1 OF 3 SHEETS | STA. | TO STA.

F.A.P. RTE.	SECTION	COUNTY	TOTAL SHEETS	SHEET NO.
554	34RS-5	PIKE	51	49
		CONTRACT NO. 72307		
		ILLINOIS	FED. AID PROJECT	

DETAILS OF MAILBOX TURNOUTS

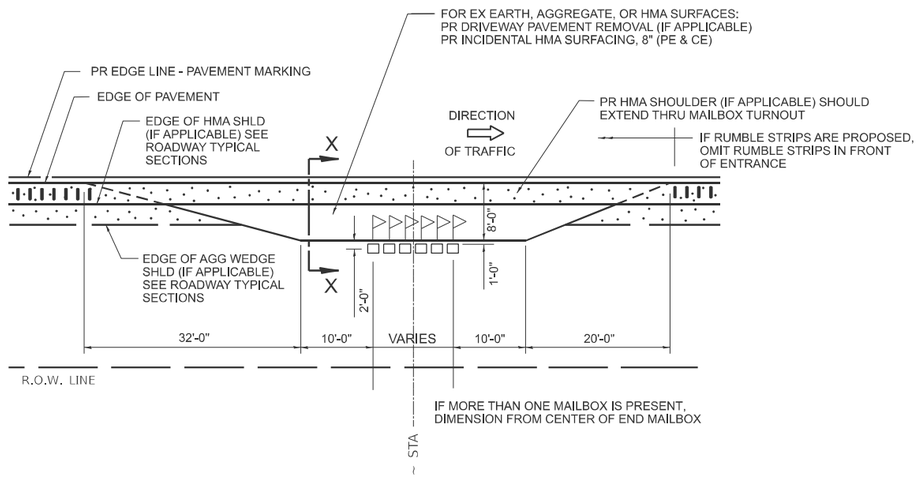

PLAN - MAILBOX TURNOUTS

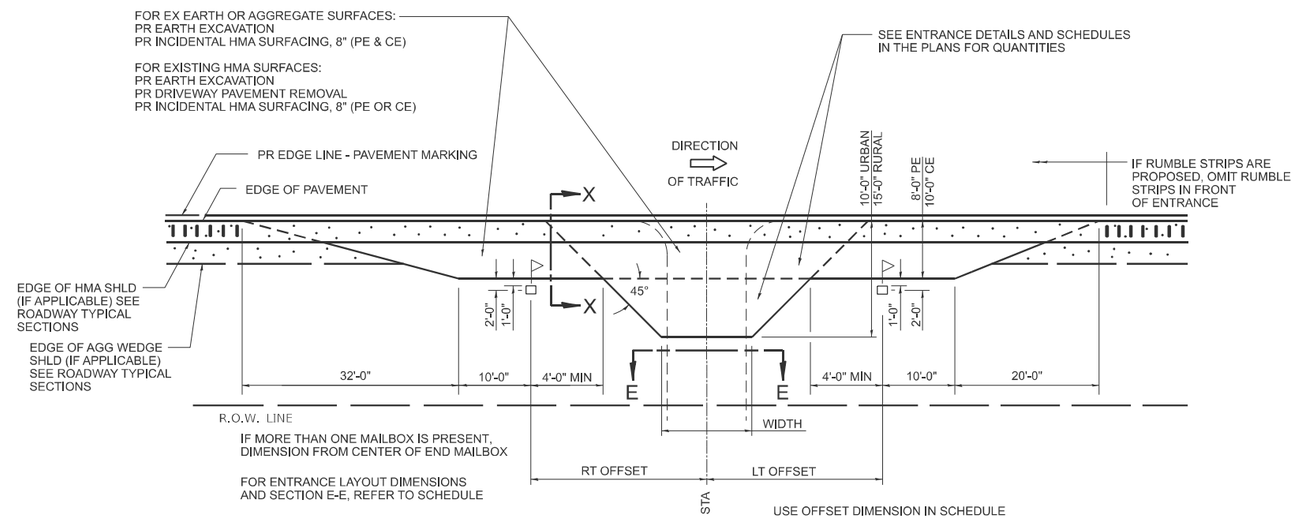

PLAN - MAILBOX TURNOUTS
PLAN - COMBINED MAILBOX TURNOUT WITH TRAILING OR LEADING ENTRANCE

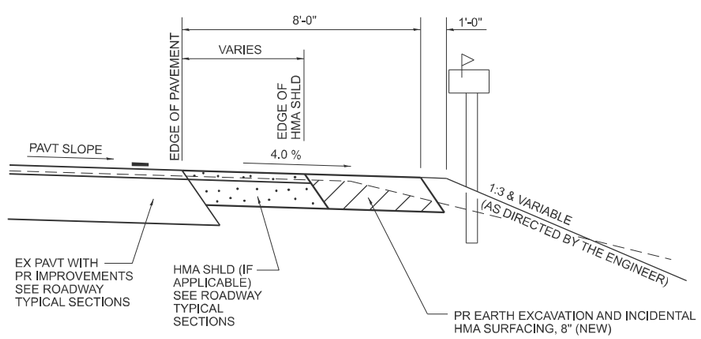

SECTION X-X THRU MAILBOX TURNOUT
APPLIES TO MAILBOX TURNOUTS COMBINED WITH
EX EARTH OR AGGREGATE PE & FE

(DETAIL APPLIES WHEN MAILBOX TURNOUT DOES NOT EXIST.
IF EXISTING, TREAT SAME AS ENTRANCE)

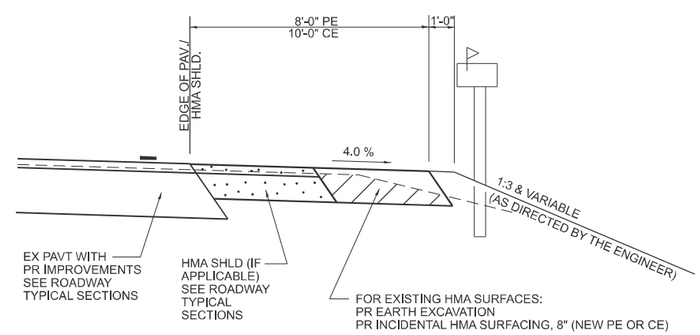

SECTION X-X THRU MAILBOX TURNOUT
APPLIES TO MAILBOX TURNOUTS COMBINED WITH
EX HMA PE & CE WITH NEW HMA SHLD

(DETAIL APPLIES WHEN MAILBOX TURNOUT DOES NOT EXIST.
IF EXISTING, TREAT SAME AS ENTRANCE)

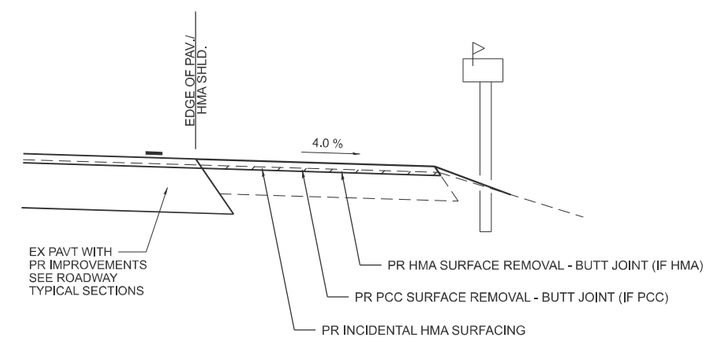

SECTION X-X THRU MAILBOX TURNOUT
APPLIES TO MAILBOX TURNOUTS COMBINED WITH
EX HMA & PCC PE & CE W/O NEW HMA SHLD

NOTE: IF THERE IS A NEW HMA SHOULDER PROPOSED, THEN THE ENTIRE EXISTING MB TURNOUT WILL BE REPLACED. IF THERE IS NO PROPOSED NEW HMA SHOULDER, THE EXISTING MB TURNOUT WILL BE MILLED AND RESURFACED.

400-ent_ppp

UPDATED 7/30/2025

MODEL: Sheet 2 [Sheet]
FILE NAME: c:\pw_work\pwidot\cabrerars\d0806269\D672307-sht-details.dgn

USER NAME = rene.cabrera	DESIGNED -	REVISED -	
	DRAWN -	REVISED -	
	CHECKED -	REVISED -	
PLOT DATE = 8/13/2025	DATE -	REVISED -	

STATE OF ILLINOIS
DEPARTMENT OF TRANSPORTATION

DISTRICT 6 DETAILS FOR RURAL/URBAN ENTRANCE & MAILBOX TURNOUT & SIDEROADS W/O CURB & GUTTER SECTION (3P - PROJECTS)

SCALE: NTS | SHEET 2 OF 3 SHEETS | STA. | TO STA.

F.A.P. RTE.	SECTION	COUNTY	TOTAL SHEETS	SHEET NO.
554	34RS-5	PIKE	51	50
		CONTRACT NO. 72307		
		ILLINOIS	FED. AID PROJECT	

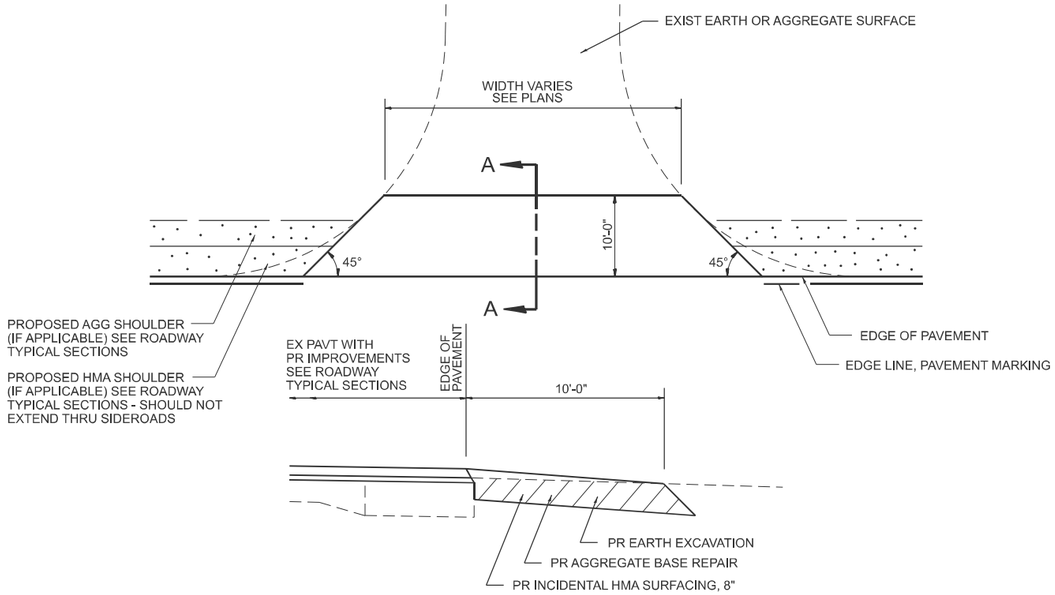

SECTION A-A

EXIST AGGREGATE SIDEROAD DETAIL (NEW HMA APRON)

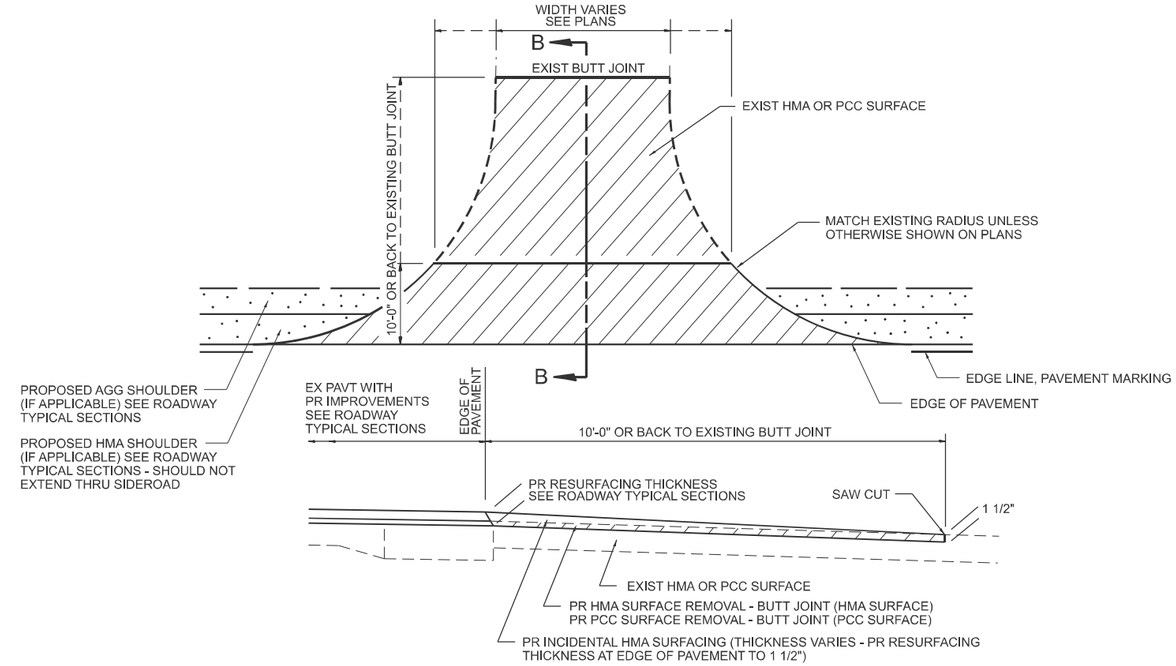

SECTION B-B

EXIST HMA OR PCC SIDEROAD DETAIL W/O CC&G (TO BE RESURFACED)

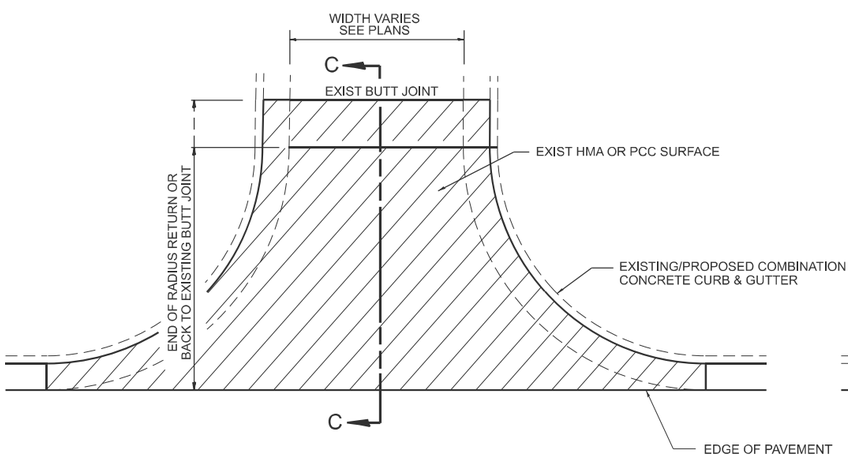

EXIST HMA SIDEROAD DETAIL W/CC&G (TO BE RESURFACED)

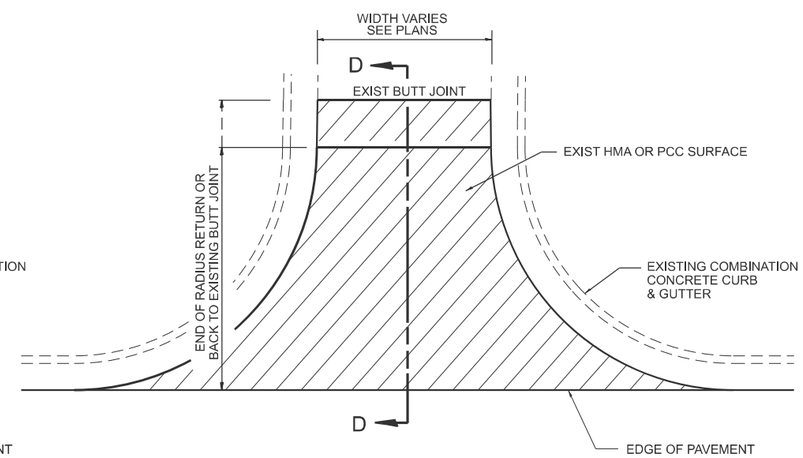

EXIST HMA OR PCC SIDEROAD DETAIL W/CC&G (TO BE RESURFACED - MILL AND FILL ONLY)

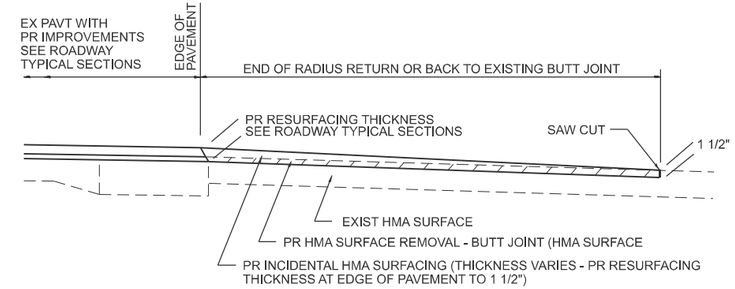

SECTION C-C

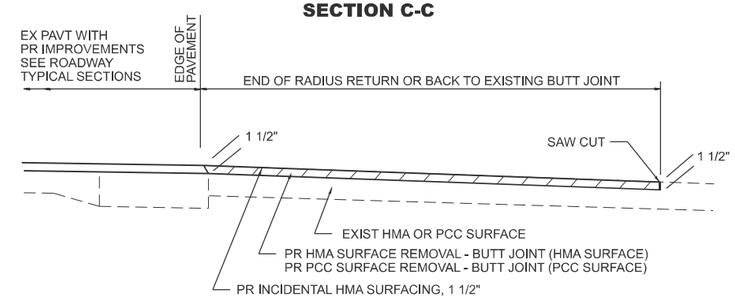

SECTION D-D

NOTES:

1. IF HMA SHOULDERS ARE PROPOSED, THEY SHOULD NOT EXTEND THROUGH SIDEROADS.
2. THE COST OF SAW CUTS SHALL BE INCLUDED IN THE COST OF THE HMA SURFACE REMOVAL - BUTT JOINT OR PCC SURFACE REMOVAL - BUTT JOINT PAY ITEMS

400-siderd

UPDATED 8/6/2025

MODEL: Side Road Detail [Sheet]
FILE NAME: c:\pw_work\pwidot\cabrerars\d0806269\D672307-sht-details.dgn

USER NAME = rene.cabrera	DESIGNED -	REVISED -	
	DRAWN -	REVISED -	
	CHECKED -	REVISED -	
PLOT DATE = 8/13/2025	DATE -	REVISED -	

STATE OF ILLINOIS
DEPARTMENT OF TRANSPORTATION

DIST. 6 DETAILS FOR SIDEROADS (3P-PROJ.)

SCALE: NTS | SHEET 3 OF 3 SHEETS | STA. | TO STA.

F.A.P. RTE.	SECTION	COUNTY	TOTAL SHEETS	SHEET NO.
554	34RS-5	PIKE	51	51
		CONTRACT NO. 72307		
		ILLINOIS	FED. AID PROJECT	