01-16-2026 LETTING ITEM 062

BFW ENGINEERING & CONSULTING

F.A.P. RTE.	SECTION	COUNTY	TOTAL SHEETS	SHEET NO.
317	17(RS-6,TS-2);18(RS,TS)-2	TAZEWELL	85	1
	ILLINOIS	CONTRACT NO. 68F92		

STATE OF ILLINOIS
DEPARTMENT OF TRANSPORTATION

D-94-082-20

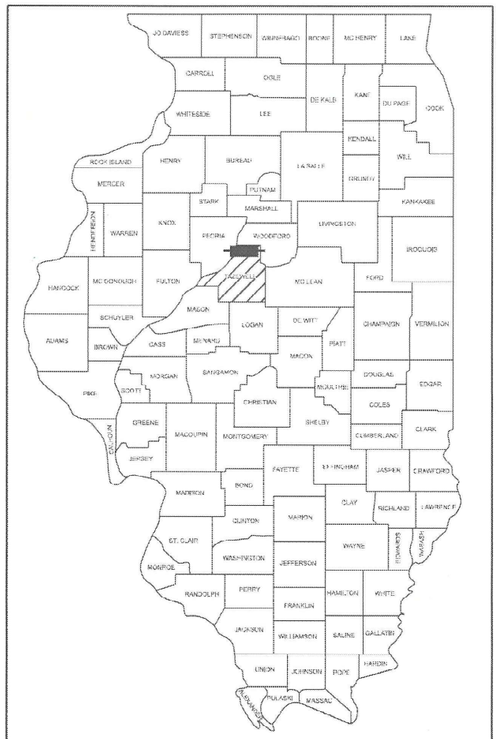

LOCATION OF SECTION INDICATED THUS: -

FOR INDEX OF SHEETS, AND LIST OF HIGHWAY STANDARDS SEE SHEET NO. 2

FOR SUMMARY OF QUANTITIES, SEE SHEET NO. 4

PROPOSED HIGHWAY PLANS

FAP ROUTE 317 (US 24)
SECTION 17(RS-6,TS-2);18(RS,TS)-2
PROJECT NHPP-MDDS(771)
PPP RESURFACING WITH TRAFFIC SIGNALS
TAZEWELL COUNTY

C-94-115-20

TRAFFIC DATA

US 24

FUNCTIONAL CLASSIFICATION: OTHER PRINICPAL ARTERIAL

TRAFFIC:

US 24 FROM W. OF GROSENBACH RD TO GRANGE RD
ADT: 21,220(2026); 96.0% PV, 2.0% SU, & 2.0% MU

US 24 FROM GRANGE RD TO BL-24
ADT: 19,355(2026); 96.6% PV, 1.7% SU, & 1.7% MU

US 24 FROM BL-24 TO CUMMINGS LANE
ADT: 16,460(2026); 96.3% PV, 2.0% SU, & 1.7% MU

TOWNSHIPS

FON DU LAC TOWNSHIP R4W; T26N
WASHINGTON TOWNSHIP R3W; T26N

BEGIN PROJECT
STA. 341+00.00

STA EQU:
STA 413+19.00(BK) =
STA 2+46.00 (AH)

END PROJECT
STA. 100+30.00

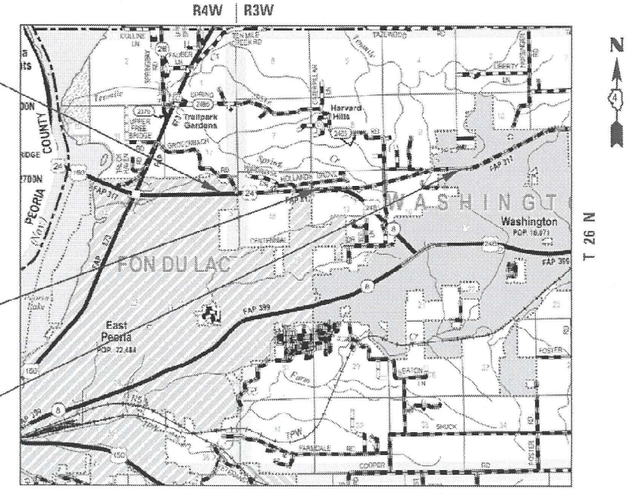

LOCATION MAP

SCALE (1" = 1 MILE)
0 1 2 3 MILE

GROSS LENGTH = 17,003.00 FT. = 3.220 MILES
NET LENGTH = 17,003.00 FT. = 3.220 MILES

COORDINATE SYSTEM : NORTH AMERICAN DATUM (NAD) 83
ILLINOIS STATE PLANE WEST ZONE

POSTED SPEED : 55 MPH

J.U.L.I.E.
JOINT UTILITY LOCATION INFORMATION FOR EXCAVATION
1-800-892-0123
OR 811

PROJECT ENGINEER: DAVID BROVIAK (309)671-3493

PROJECT MANAGER: MICHAEL WITTKOP (309)671-3455

CONTRACT NO. 68F92

JOHN C. NEGANGARD
10/07/25
062-047264
LICENSED PROFESSIONAL ENGINEER OF ILLINOIS
EXPIRES 11/30/25

STATE OF ILLINOIS
DEPARTMENT OF TRANSPORTATION

SUBMITTED October 16 20 25
Kenoil A Garnett KSD
REGION FIVE ENGINEER

December 5 20 25
ENGINEER OF DESIGN AND ENVIRONMENT

December 5 20 25
DIRECTOR OF HIGHWAYS PROJECT IMPLEMENTATION

PRINTED BY THE AUTHORITY OF THE STATE OF ILLINOIS

INDEX OF SHEETS

LIST OF HIGHWAY STANDARDS

STANDARD NO.	DESCRIPTION
000001- 09	STANDARD SYMBOLS, ABBREVIATIONS AND PATTERNS
001006	DECIMAL OF AN INCH AND OF A FOOT
424001-12	PERPENDICULAR CURB RAMPS FOR SIDEWALKS
424031-03	MEDIAN PEDESTRIAN CROSSINGS
442101-09	CLASS B PATCHES
442201-04	CLASS C AND D PATCHES
606001-09	CONCRETE CURB TYPE B AND COMBINATION CONCRETE CURB AND GUTTER
606301-04	PC CONCRETE ISLANDS AND MEDIANS
630001-13	STEEL PLATE BEAM GUARDRAIL
630301-09	SHOULDER WIDENING FOR TYPE 1 (SPECIAL) GUARDRAIL TERMINALS
631031-18	TRAFFIC BARRIER TERMINAL, TYPE 6
635001-02	DELINEATORS
701001-02	OFF-ROAD OPERATIONS, 2L, 2W, MORE THAN 15' (4.5 m) AWAY
701006-05	OFF-ROAD OPERATIONS, 2L, 2W, 15' (4.5 M) TO 24" (600 mm) FROM PAVEMENT EDGE
701011-04	OFF-ROAD MOVING OPERATIONS, 2L, 2W, DAY ONLY
701101-05	OFF-ROAD OPERATIONS, MULTILANE, 15' (4.5 M) TO 24" (600 mm) FROM PAVEMENT EDGE
701106-02	OFF-ROAD OPERATIONS, MULTILANE, MORE THAN 15' (4.5 M) AWAY
701201-05	LANE CLOSURE, 2L, 2W, DAY ONLY, FOR SPEEDS > 45 MPH
701301-04	LANE CLOSURE, 2L, 2W, SHORT TIME OPERATIONS
701306-04	LANE CLOSURE, 2L, 2W, SLOW MOVING OPERATIONS DAY ONLY, FOR SPEEDS > 45 MPH
701311-03	LANE CLOSURE, 2L, 2W, MOVING OPERATIONS - DAY ONLY
701411-09	LANE CLOSURE, MULTILANE, AT ENTRANCE OR EXIT RAMP, FOR SPEEDS > 45 MPH
701421-08	LANE CLOSURE, MULTILANE, DAY OPERATIONS, FOR SPEEDS ≥ 45 MPH TO 55 MPH
701422-10	LANE CLOSURE, MULTILANE, FOR SPEEDS > 45 MPH TO 55 MPH
701426-09	LANE CLOSURE, MULTILANE, INTERMITTENT OR MOVING OPERATION, FOR SPEEDS > 45 MPH
701451-05	RAMP CLOSURE FREEWAY/EXPRESSWAY
701456-05	PARTIAL EXIT RAMP CLOSURE FREEWAY/EXPRESSWAY
701701-10	URBAN LANE CLOSURE, MULTILANE INTERSECTION
701801-06	SIDEWALK, CORNER OR CORSSWALK CLOSURE
701901-11	TRAFFIC CONTROL DEVICES
720001-01	SIGN PANEL MOUNTING DETAILS
720016-04	MAST ARM MOUNTED STREET NAME SIGNS
725001-01	OBJECT AND TERMINAL MARKERS
780001-05	TYPICAL PAVEMENT MARKINGS
781001-04	TYPICAL APPLICATIONS RAISED REFLECTIVE PAVEMENT MARKERS
782006-01	GUARDRAIL AND BARRIER WALL REFLECTOR MOUNTING DETAILS
805001-01	ELECTRICAL SERVICE INSTALLATION DETAILS
814001-03	HANDHOLES
814006-03	DOUBLE HANDHOLES
821101-03	LUMINAIRE WIRING IN POLE
877001-08	STEEL MAST ARM ASSEMBLY AND POLE 16' THROUGH 55'
877011-10	STEEL COMBINATION MAST ARM ASSEMBLY AND POLE 16' THROUGH 55'
877012-07	STEEL COMBINATION MAST ARM ASSEMBLY AND POLE 56' THROUGH 75'
878001-11	CONCRETE FOUNDATION DETAILS
880006-01	TRAFFIC SIGNAL MOUNTING DETAILS
886001-01	DETECTOR LOOP INSTALLATIONS
886006-01	TYPICAL LAYOUT FOR DETECTION LOOPS
BLR 21-9	TYPICAL APPLICATION OF TRAFFIC CONTROL DEVICES FOR CONSTRUCTION ON RURAL LOCAL ROADS

GENERAL NOTES

1. THE FOLLOWING APPLICATION RATES WERE USED FOR ESTIMATING PLAN QUANTITIES AND SHALL NOT BE USED FOR THE BASIS OF FINAL QUANTITIES FOR PAYMENT :

ITEMS	APPLICATION RATES
AGGREGATE SURFACE, SHOULDERS, GRANULAR SUBBASE	2.05 TONS/CU. YD.
POLYMERIZED BITUMINOUS MATERIALS (TACK COAT)	0.08 LBS/SF (ON MILLED AND PCC SURFACES); 0.08 LBS/SF (ON HMA LIFTS)
HMA BINDERS AND SURFACES	112 LBS/SY/INCH

2. THERE ARE NO AVAILABLE WASTE SITES ON EXISTING RIGHT-OF-WAY WITHIN THE LIMITS OF THE PROJECT. THE DISPOSAL WILL BE THE RESPONSIBILITY OF THE CONTRACTOR AND WASTE MUST BE DISPOSED OF IN ACCORDANCE WITH ARTICLE 202.03 OF THE STANDARD SPECIFICATIONS.

3. MINIMUM VERTICAL CLEARANCE: THE CONTRACTOR SHALL VERIFY THE EXISTING STRUCTURE VERTICAL CLEARANCE PRIOR TO PLACING BITUMINOUS OVERLAY UNDER ANY STRUCTURE. A MINIMUM 16'-2" VERTICAL CLEARANCE SHALL BE MAINTAINED UNDER ALL STRUCTURES.

4. THE CONTRACTOR SHALL COMPLETE ALL PATCHING PRIOR TO THE ASPHALT SURFACE REMOVAL.

5. ATTAINMENT OF PROPER CROWN OR SUPERELEVATION SHALL BE FULLY ACCOMPLISHED WITH HOT-MIX ASPHALT SURFACE REMOVAL (OR HOT-MIX ASHALT BINDER COURSE, ONLY WHEN SPECIFIED).

6. AT ALL LOCATIONS WHERE PROPOSED HOT-MIX ASPHALT SURFACE PAVEMENT JOINS AN EXISTING HOT-MIX ASPHALT SURFACE OR CONCRETE PAVEMENT, A FULL DEPTH SAW CUT SHALL BE CONSTRUCTED AS PART OF THE HOT-MIX ASPHALT SURFACE REMOVAL. THE COST OF THE SAW CUT SHALL BE CONSIDERED AS INCLUDED IN THE COST OF THE HOT-MIX ASPHALT SURFACE REMOVAL PAY ITEM.

7. BUTT JOINT CUTTING TIME RESTRICTION: BUTT JOINTS SHALL NOT BE MILLED MORE THAN THREE (3) DAYS PRIOR TO PLACEMENT OF THE HMA BINDER /SURFACE COURSE.

8. PAVING SURFACE COURSE: CONTINUOUS PAVING OPERATIONS ON THE MAIN ROADWAY SHALL BE MAINTAINED AT ALL TIMES DURING THE CONSTRUCTION OF THE HOT-MIX ASPHALT SURFACE. NO INTERRUPTIONS FOR SIDE ROADS, ENTRANCES, TURN LANES, ETC. WILL BE ALLOWED.

9. AFTER A LIFT OF HOT-MIX ASPHALT HAS BEEN PLACED, THE LANE SHALL REMAIN CLOSED TO TRAFFIC UNTIL THE NEW MAT HAS COOLED TO 150 DEGEES FAHRENHEIT.

10. WINTER SHUTDOWN RESTRICTIONS ON COLD MILLED PROJECTS: PRIOR TO WINTER SHUTDOWN MANHOLES, WHERE APPLICABLE, SHALL BE ADJUSTED TO THE ELEVATION OF THE BINDER COURSE/LEVELING BINDER TO EASE IN PLOWING SNOW, AND RE-ADJUSTED TO FINISHED GRADE IN THE SPRING. THE INITIAL MANHOLE ADJUSTMENT WILL BE PAID FOR AT THE CONTRACT UNIT PRICE AND ANY READJUSTMENT,DIRECTED BY THE AS ENGINEER, WILL BE PAID FOR IN ACCORDANCE WITH ARTICLE 109.04.

11. MEDIAN AND ISLAND NOSES: WHEN CONSTRUCTING MEDIAN AND ISLAND NOSES THE FOLLOWING CRITERIA SHOULD BE FOLLOWED:
    A. BARRIER CURB SHALL BE USED TO CONSTRUCT NOSES WHEN THE MEDIAN OR ISLAND SURROUNDS A MAST ARM OR OTHER NON-BREAKAWAY FOUNDATION.
    B. RAMPED NOSES SHALL BE USED ON MEDIANS OR ISLANDS WITH BREAKAWAY POSTS.

12. SIGN POST HOLES: VERTICAL HOLES SHALL BE CONSTRUCTED IN THE ISLAND PAVEMENT AND/OR CONCRETE MEDIAN OF THE TYPE SPECIFIED OR CONCRETE MEDIAN SURFACE 4 INCHES (100 MM). THE HOLES SHALL BE 24 INCHES (600 MM) IN DIAMETER OR 24 INCHES (600 MM) SQUARE AND THEY SHALL BE FREE OF ANY OBSTRUCTION, EXCEPT EARTH, FOR A DEPTH OF 5 FEET (1.5 M) AT THE LOCATIONS SHOWN ON THE PLANS OR AS DIRECTED BY THE ENGINEER. ANY HOLES NOT USED FOR THE PLACEMENT OF SIGNS SHALL BE FILLED AND COMPACTED FLUSH WITH THE TOP OF THE ISLAND PAVEMENT, CONCRETE MEDIAN OF THE TYPES SPECIFIED, ORCONCRETE MEDIAN SURFACE 4 INCHES (100 MM). THE TOP 3 INCHES (75 MM) OF SAID COMPACTED FILL SHALL CONSIST OF A HOT-MIX ASPHALT MIXTURE. ALL HOLES IN WHICH THE SIGN POSTS ARE INSTALLED AT THE TIME OF THIS CONTRACT SHALL BE SIMILARLY FILLED. THIS WORK, INCLUDING ANY REQUIRED PAVEMENT REMOVAL NECESSARY TO CONSTRUCT THE SIGN POST HOLES, WILL NOT BE PAID FOR SEPARATELY BUT SHALL BE INCLUDED IN THE CONTRACT UNIT PRICE PER APPLICABLE CONCRETE ISLAND PAY ITEM.

13. THE CONTRACTOR WILL BE RESPONSIBLE FOR REMOVAL AND REINSTALLATION OF EXISTING STOP SIGNS IN RAISED CONCRETE ISLANDS THAT ARE BEING REMOVED AND REPLACED. THE COSTS OF THE REMOVAL AND REINSTALLATION OF EXISTING SIGN ASSEMBLY SHALL BE INCLUDED IN THE CONTRACT BID ITEM FOR THE CONCRETE ISLAND WORK.

14. ADDITIONAL SUPPLEMENTAL TRAFFIC CONTROL: THE DEPARTMENT RESERVES THE RIGHT AT ANY TIME TO ADD ADDITIONAL TRAFFIC CONTROL SYSTEMS OR DEVICES WITHIN THE ACTIVE CONTRACT LIMITS, BY MEANS OF AN ADDITIONAL CONTRACT. ALL TERMS OF ARTICLE 105.08 OF THE STANDARD SPECIFICATIONS SHALL BE FOLLOWED BY EACH CONTRACTOR.

15. TRAFFIC COUNTER LOOP DETECTOR INSTALLATION: THE RESIDENT ENGINEER AND/OR CONTRACTOR SHALL NOTIFY THE TRAFFIC STUDIES TECHNICIAN IN PROGRAM DEVELOPMENT AT LEAST ONE WEEK PRIOR TO THE INSTALLATION TO DETERMINE EXACT LOCATION.

GENERAL NOTES CONT.

16. THE CONTRACTOR SHALL BE RESPONSIBLE FOR LOCATING AND PROTECTING UTILITY PROPERTY DURING CONSTRUCTION OPERATIONS AS OUTLINED IN ARTICLE 107.39 OF THE STANDARD SPECIFICATIONS. A MINIMUM OF 48 HOURS ADVANCE NOTICE IS REQUIRED FOR 'NON-EMERGENCY WORK. THE J.U.L.I.E. NUMBER IS 800-892-0123. THE FOLLOWING LISTED UTILITIES ARE LOCATED WITHIN THE PROJECT 'LIMITS OR ADJACENT TO THE CONSTRUCTION LIMITS AND ARE MEMBERS OF J.U.L.I.E.:

UTILITY COMPANY	UTILITY TYPE	ADRESS	CONTACT NAME	PHONE NUMBER	EMAIL
AT&T ENTERPRISES, LLC	COMMUNICATION	2500 COLT ROAD, SPRINGFIELD, IL 62707	VANESSA ROSS	217-814-2314	VF2021@ATT.COM
AT&T CONSULTANT:			EDWARD TILTON (KCI TECHNOLOGIES, INC)		EDWARD.TILTON@KCI.COM
IN CASE OF POSSIBLE CONFLICT			KEN CAUDILL	240-215-7041	KEN.CAUILL@KCI.COM
AT&T METRO / AT&T TCA	COMMUNICATION	(NO ADDRESS GIVEN)	TIM LAPOINTE		T10695@ATT.COM
AMEREN ILLINOIS	ELECTRIC	8420 N UNIVERSITY ST, PEORIA, IL 61615	LEXUS BAGGOTT	309-213-1797	LBAGGOTT@AMEREN.COM
AMEREN ILLINOIS	GAS	7064 W ROUTE 150, EDWARDS, IL 61528	ZACH WILSON	447-287-8838 (OFFICE) 309-645-4458 (CELL)	ZWILSON@AMEREN.COM
BLUEBIRD	COMMUNICATION	10024 OFFICE CENTER AVE, ST.LOUIS, MO. 63128	JEREMY CARR	309-713-6442	JEREMY.CARR@BLUEBIRDNETWORK.COM
COMCAST	COMMUNICATION	(NO ADDRESS GIVEN)	PAUL NASH	309-213-1797	PAULNASH@COMCAST.COM
FRONTIER	COMMUNICATION	CHATHAM,IL	JOHN OFLAHERTY	217-483-4658	JOHN.O'FLAHERTY@FTR.COM
LUMEN (CENTURYLINK)	COMMUNICATION	(NO ADDRESS GIVEN)	KATHERINE WALTZ	570-337-0210 (CELL) 312-253-1800 (OFFICE)	KWALTZ@HBKENGINEERING.COM
MTCO COMMINICATIONS	COMMUNICATION	(NO ADDRESS GIVEN)	LUKE MILLER	309-367-4197 (OFFICE)	LMILLER@CORP.MTCO.COM
IDOT DISTRICT 4 UTILITY TECHNICIAN (FOR QUESTIONS)		401 MAIN ST, PEORIA, IL 61602-1111	MICHELE NOTT	309-671-3397	MICHELE.NOTT@ILLINOIS.GOV

17. IDOT IS NOT A MEMBER OF J.U.L.I.E. IF YOU ARE NEAR ANY OVERHEAD LIGHTING OR TRAFFIC SIGNALS, CONTACT THE IDOT TRAFFIC OFFICE AT LEAST 48 HOURS PRIOR TO THE WORK.

18. HMA MIXTURE REQUIREMENTS:

LOCATIONS:	MAINLINE	MAINLINE	SHOULDERS	SHOULDERS	PATCHING	INCIDENTAL
MIXTURE USE(S):	POLYMER SURFACE 2.00"	POLYMER BINDER 1.75"	HMA SHOULDERS & CROSS-OVER (SURFACE LIFT)	HMA SHOULDERS (LOWER LIFT)	PARTIAL DEPTH PATCHING	INCIDENTAL SURFACE
AG/PG	SBS OR SBR 70-28	SBS OR SBR 70-28	PG 58-22	PG 58-22	PG 58-22	PG 58-22
DESIGN AIR VOIDS:	4.0% @ N=50	4.0% @ N=50	4.0% @ N=50	4.0% @ N=50	4.0% @ N=50	4.0% @ N=50
MIXTURE COMPOSITION:	IL 9.5	IL 9.5	IL 9.5FG	IL 9.5	IL 9.5	IL 9.5
FRICTION AGGREGATE:	MIXTURE D	NA	MIXTURE C	NA	NA	MIXTURE C
QUALITY MANAGEMENT PROGRAM:	PFP	PFP	QC/QA	QC/QA	QC/QA	QC/QA
MTD	YES	YES	YES	YES	NO	NO

Note: 1) Individual lift thickness of each mix type will be no less than 3 times nominal maximum aggregate size and no more than 6 times nominal maximum aggregate size, unless otherwise approved by the Engineer.
2) For design purposes, mixture weight for all mixes is determined to be 112.0 lb/s.y./in., unless otherwise noted.
3) Sublot sizes for PFP and QCP mixes will be 1000 tons, unless otherwise agreed to by the Engineer and the paving contractor.

19. HMA PAVING REQUIREMENTS: THE HMA BINDER AND SURFACE LIFTS SHALL BE PAVED MONOLITHICALLY WITH THE HMA SHOULDERS WHEN SHOULDER WIDTH IS SIX FEET OR LESS. LONGITUDINAL JOINT TRIMMING SHALL BE COMPLETED ON CENTERLINE AND SHOULDER JOINTS, AND AT JOINTS ADJACENT TO MAILLINE LANES AT ALL INTERSECTIONS AS DIRECTED BY THE ENGINEER. THE ENGINEER WILL DETERMINE QUANTITY SPLITS (WEIGHTS) FOR THE VARIOUS HMA PAY ITEMS BASED ON AREAS RESURFACED.

COMMITMENTS:

NONE TO LIST.

SUMMARY OF QUANTITIES

CODE NO.	ITEM	UNIT	TOTAL QUANTITY	CONSTR. CODE 0005 TAZEWELL CO. URBAN ROADWAY 80% FED 20% STATE	CONSTR. CODE 0021 TAZEWELL CO. EAST PEORIA URBAN TRAFFIC SIGNALS US 24 & GRANGE RD 80% FED 15% STATE 5% EAST PEORIA	CONSTR. CODE 0021 TAZEWELL CO. WASHINGTON URBAN TRAFFIC SIGNALS US 24 & CUMMINGS LN 80% FED 10% STATE 10% WASHINGTON
25000750	MOWING	ACRE	22.5	22.5		
35300700	PORTLAND CEMENT CONCRETE BASE COURSE 12"	SQ YD	26	26		
40200800	AGGREGATE SURFACE COURSE, TYPE B	TON	34	34		
40600295	POLYMERIZED BITUMINOUS MATERIALS (TACK COAT)	POUND	250108	250108		
40600405	MATERIAL TRANSFER DEVICE	TON	36455	36455		
40600982	HOT-MIX ASPHALT SURFACE REMOVAL - BUTT JOINT	SQ YD	2480	2480		
40600990	TEMPORARY RAMP	SQ YD	1609	1609		
40603205	POLYMERIZED HOT-MIX ASPHALT BINDER COURSE, IL-9.5, N50	TON	11434	11434		
40604160	POLYMERIZED HOT-MIX ASPHALT SURFACE COURSE, IL-9.5, MIX "D", N50	TON	13255	13255		
40800050	INCIDENTAL HOT-MIX ASPHALT SURFACING	TON	21	21		
42400100	PORTLAND CEMENT CONCRETE SIDEWALK 4 INCH	SQ FT	488	488		
* 42400800	DETECTABLE WARNINGS	SQ FT	80	80		
44000157	HOT-MIX ASPHALT SURFACE REMOVAL, 2"	SQ YD	152200	152200		
44000164	HOT-MIX ASPHALT SURFACE REMOVAL, 3 3/4"	SQ YD	20281	20281		

* SPECIALTY ITEM

SUMMARY OF QUANTITIES

CODE NO.	ITEM	UNIT	TOTAL QUANTITY	CONSTR. CODE 0005 TAZEWELL CO. URBAN ROADWAY 80% FED 20% STATE	CONSTR. CODE 0021 TAZEWELL CO. EAST PEORIA URBAN TRAFFIC SIGNALS US 24 & GRANGE RD 80% FED 15% STATE 5% EAST PEORIA	CONSTR. CODE 0021 TAZEWELL CO. WASHINGTON URBAN TRAFFIC SIGNALS US 24 & CUMMINGS LN 80% FED 10% STATE 10% WASHINGTON
44000600	SIDEWALK REMOVAL	SQ FT	532	532		
44000500	COMBINATION CURB AND GUTTER REMOVAL	FOOT	15	15		
44004250	PAVED SHOULDER REMOVAL	SQ YD	95	95		
44213200	SAW CUTS	FOOT	2938	2938		
48102100	AGGREGATE WEDGE SHOULDER, TYPE B	TON	3912	3912		
48203100	HOT-MIX ASPHALT SHOULDERS	TON	11767	11767		
60605000	COMBINATION CONCRETE CURB AND GUTTER, TYPE B-6.24	FOOT	526	526		
60623200	CONCRETE MEDIAN, TYPE SM-6.24	SQ FT	190	190		
* 63000001	STEEL PLATE BEAM GUARDRAIL, TYPE A, 6 FOOT POSTS	FOOT	2038	2038		
* 63100045	TRAFFIC BARRIER TERMINAL, TYPE 2	EACH	5	5		
* 63100167	TRAFFIC BARRIER TERMINAL, TYPE 1 (SPECIAL) TANGENT	EACH	5	5		
63200310	GUARDRAIL REMOVAL	FOOT	2513	2513		
64200116	SHOULDER RUMBLE STRIPS, 16 INCH	FOOT	55133	55133		

* SPECIALTY ITEM

MODEL: Sheet 2
FILE NAME: c:\users\twilliams1\appdata\local\bentley\projectwise\workingdir\bfwms-pw.bentley.com_bfwms-pw-01\tony.williams\d0215423\D468F92-sht-SOQ.dgn

BFW ENGINEERING & CONSULTING

USER NAME = sskinner	DESIGNED -	REVISED -
	DRAWN -	REVISED -
PLOT SCALE = $SCALE$	CHECKED -	REVISED -
PLOT DATE = 8/27/2025	DATE -	REVISED -

STATE OF ILLINOIS
DEPARTMENT OF TRANSPORTATION

SUMMARY OF QUANTITIES
US 24

SCALE: N.T.S. | SHEET 2 OF 10 SHEETS | STA. | TO STA.

F.A.P. RTE.	SECTION	COUNTY	TOTAL SHEETS	SHEET NO.
317	17(RS-6,TS-2):18(RS,TS)-2	TAZEWELL	85	5

CONTRACT NO. 68F92

ILLINOIS | FED. AID PROJECT

REV. 11/25/25

SUMMARY OF QUANTITIES

CODE NO.	ITEM	UNIT	TOTAL QUANTITY	CONSTR. CODE 0005 TAZEWELL CO. URBAN ROADWAY 80% FED 20% STATE	CONSTR. CODE 0021 TAZEWELL CO. EAST PEORIA URBAN TRAFFIC SIGNALS US 24 & GRANGE RD 80% FED 15% STATE 5% EAST PEORIA	CONSTR. CODE 0021 TAZEWELL CO. WASHINGTON URBAN TRAFFIC SIGNALS US 24 & CUMMINGS LN 80% FED 10% STATE 10% WASHINGTON
67000400	ENGINEER'S FIELD OFFICE, TYPE A	CAL MO	12	12		
67100100	MOBILIZATION	L SUM	1	1		
70100310	TRAFFIC CONTROL AND PROTECTION, STANDARD 701421	L SUM	1	1		
70100320	TRAFFIC CONTROL AND PROTECTION, STANDARD 701422	L SUM	1	1		
70100420	TRAFFIC CONTROL AND PROTECTION, STANDARD 701411	EACH	2	2		
70100820	TRAFFIC CONTROL AND PROTECTION, STANDARD 701451	LSUM	1	1		
70100825	TRAFFIC CONTROL AND PROTECTION, STANDARD 701456	LSUM	1	1		
70102640	TRAFFIC CONTROL AND PROTECTION, STANDARD 701801	LSUM	1	1		
70103815	TRAFFIC CONTROL SURVEILLANCE	CAL DA	10	10		
70107025	CHANGEABLE MESSAGE SIGN	CAL DA	500	500		
70200100	NIGHTTIME WORK ZONE LIGHTING	LSUM	1	1		
70300100	SHORT TERM PAVEMENT MARKING	FOOT	11355	11355		
70300150	SHORT TERM PAVEMENT MARKING REMOVAL	SQ FT	1893	1893		
70300211	TEMPORARY PAVEMENT MARKING LETTERS AND SYMBOLS - PAINT	SQ FT	874	874		

* SPECIALTY ITEM

SUMMARY OF QUANTITIES

	CODE NO.	ITEM	UNIT	TOTAL QUANTITY	CONSTR. CODE 0005 TAZEWELL CO. URBAN ROADWAY 80% FED 20% STATE	CONSTR. CODE 0021 TAZEWELL CO. EAST PEORIA URBAN TRAFFIC SIGNALS US 24 & GRANGE RD 80% FED 15% STATE 5% EAST PEORIA	CONSTR. CODE 0021 TAZEWELL CO. WASHINGTON URBAN TRAFFIC SIGNALS US 24 & CUMMINGS LN 80% FED 10% STATE 10% WASHINGTON
	70300221	TEMPORARY PAVEMENT MARKING - LINE 4"- PAINT	FOOT	80170	80170		
	70300251	TEMPORARY PAVEMENT MARKING - LINE 8"- PAINT	FOOT	10109	10109		
	70300261	TEMPORARY PAVEMENT MARKING - LINE 12"- PAINT	FOOT	1711	1711		
	70300281	TEMPORARY PAVEMENT MARKING - LINE 24"- PAINT	FOOT	507	507		
*	72000100	SIGN PANEL - TYPE 1	SQ FT	10			10
*	72000200	SIGN PANEL - TYPE 2	SQ FT	161		78	83
*	72501000	TERMINAL MARKER - DIRECT APPLIED	EACH	5	5		
*	78009000	MODIFIED URETHANE PAVEMENT MARKING - LETTERS AND SYMBOLS	SQ FT	874	874		
*	78009004	MODIFIED URETHANE PAVEMENT MARKING - LINE 4"	FOOT	80170	80170		
*	78009008	MODIFIED URETHANE PAVEMENT MARKING - LINE 8"	FOOT	10109	10109		
*	78009012	MODIFIED URETHANE PAVEMENT MARKING - LINE 12"	FOOT	1711	1711		
*	78009024	MODIFIED URETHANE PAVEMENT MARKING - LINE 24"	FOOT	507	507		
*	78011000	GROOVING FOR RECESSED PAVEMENT MARKING, LETTERS AND SYMBOLS	SQ FT	873	873		
*	78011025	GROOVING FOR RECESSED PAVEMENT MARKING 5"	FOOT	80170	80170		

* SPECIALTY ITEM

SUMMARY OF QUANTITIES

	CODE NO.	ITEM	UNIT	TOTAL QUANTITY	CONSTR. CODE 0005 TAZEWELL CO. URBAN ROADWAY 80% FED 20% STATE	CONSTR. CODE 0021 TAZEWELL CO. EAST PEORIA URBAN TRAFFIC SIGNALS US 24 & GRANGE RD 80% FED 15% STATE 5% EAST PEORIA	CONSTR. CODE 0021 TAZEWELL CO. WASHINGTON URBAN TRAFFIC SIGNALS US 24 & CUMMINGS LN 80% FED 10% STATE 10% WASHINGTON
*	78011045	GROOVING FOR RECESSED PAVEMENT MARKING 9"	FOOT	10109	10109		
*	78011065	GROOVING FOR RECESSED PAVEMENT MARKING 13"	FOOT	1711	1711		
*	78011125	GROOVING FOR RECESSED PAVEMENT MARKING 25"	FOOT	507	507		
*	78100100	RAISED REFLECTIVE PAVEMENT MARKER	EACH	671	671		
	78300200	RAISED REFLECTIVE PAVEMENT MARKER REMOVAL	EACH	671	671		
	78300202	PAVEMENT MARKING REMOVAL - WATER BLASTING	SQ FT	605	605		
*	80400100	ELECTRIC SERVICE INSTALLATION	EACH	2		1	1
*	81028350	UNDERGROUND CONDUIT, PVC, 2" DIA.	FOOT	80			80
*	81028370	UNDERGROUND CONDUIT, PVC, 3" DIA.	FOOT	632		297	335
*	81028380	UNDERGROUND CONDUIT, PVC, 3 1/2" DIA.	FOOT	497		185	312
*	81400700	HANDHOLE, PORTLAND CEMENT CONCRETE	EACH	2		1	1
*	81400720	DOUBLE HANDHOLE, PORTLAND CEMENT CONCRETE	EACH	1		1	
*	81702110	ELECTRIC CABLE IN CONDUIT, 600V (XLP-TYPE USE) 1/C NO. 10	FOOT	3904		1739	2165
*	82110008	LUMINAIRE, LED, ROADWAY, OUTPUT DESIGNATION H	EACH	8		4	4

* SPECIALTY ITEM

SUMMARY OF QUANTITIES

	CODE NO.	ITEM	UNIT	TOTAL QUANTITY	CONSTR. CODE 0005 TAZEWELL CO. URBAN ROADWAY 80% FED 20% STATE	CONSTR. CODE 0021 TAZEWELL CO. EAST PEORIA URBAN TRAFFIC SIGNALS US 24 & GRANGE RD 80% FED 15% STATE 5% EAST PEORIA	CONSTR. CODE 0021 TAZEWELL CO. WASHINGTON URBAN TRAFFIC SIGNALS US 24 & CUMMINGS LN 80% FED 10% STATE 10% WASHINGTON
*	86300400	CONTROLLER CABINET TYPE IV	EACH	2		1	1
*	87301225	ELECTRIC CABLE IN CONDUIT, SIGNAL NO. 14 3C	FOOT	131			131
*	87301245	ELECTRIC CABLE IN CONDUIT, SIGNAL NO. 14 5C	FOOT	7763		2753	5010
*	87301255	ELECTRIC CABLE IN CONDUIT, SIGNAL NO. 14 7C	FOOT	1158			1158
*	87301515	ELECTRIC CABLE IN CONDUIT, LEAD-IN, NO. 18 3 PAIR	FOOT	2249		835	1414
*	87301900	ELECTRIC CABLE IN CONDUIT, EQUIPMENT GROUNDING CONDUCTOR, NO. 6 1C	FOOT	1529		603	926
*	87502460	TRAFFIC SIGNAL POST, GALVANIZED STEEL 12 FT.	EACH	1			1
*	87502500	TRAFFIC SIGNAL POST, GALVANIZED STEEL 16 FT.	EACH	4			4
*	87502520	TRAFFIC SIGNAL POST, GALVANIZED STEEL 18 FT.	EACH	1			1
*	87700290	STEEL MAST ARM ASSEMBLY AND POLE, 50 FT.	EACH	1		1	
*	87700300	STEEL MAST ARM ASSEMBLY AND POLE, 52 FT.	EACH	1			1
*	87702970	STEEL COMBINATION MAST ARM ASSEMBLY AND POLE 48 FT.	EACH	1			1
*	87702980	STEEL COMBINATION MAST ARM ASSEMBLY AND POLE 50 FT.	EACH	1		1	
*	87703000	STEEL COMBINATION MAST ARM ASSEMBLY AND POLE 55 FT.	EACH	2		2	

* SPECIALTY ITEM

SUMMARY OF QUANTITIES

	CODE NO.	ITEM	UNIT	TOTAL QUANTITY	CONSTR. CODE 0005 TAZEWELL CO. URBAN ROADWAY 80% FED 20% STATE	CONSTR. CODE 0021 TAZEWELL CO. EAST PEORIA URBAN TRAFFIC SIGNALS US 24 & GRANGE RD 80% FED 15% STATE 5% EAST PEORIA	CONSTR. CODE 0021 TAZEWELL CO. WASHINGTON URBAN TRAFFIC SIGNALS US 24 & CUMMINGS LN 80% FED 10% STATE 10% WASHINGTON
*	87703020	STEEL COMBINATION MAST ARM ASSEMBLY AND POLE 58 FT.	EACH	1			1
*	87703030	STEEL COMBINATION MAST ARM ASSEMBLY AND POLE 60 FT.	EACH	1			1
*	87800415	CONCRETE FOUNDATION, TYPE E 36-INCH DIAMETER	FOOT	91		63	28
*	87800420	CONCRETE FOUNDATION, TYPE E 42-INCH DIAMETER	FOOT	42			42
*	87900100	DRILL EXISTING FOUNDATION	EACH	4		2	2
*	87900200	DRILL EXISTING HANDHOLE	EACH	22		4	18
*	88040070	SIGNAL HEAD, POLYCARBONATE, LED, 1-FACE, 3-SECTION, BRACKET MOUNTED	EACH	16		6	10
*	88040090	SIGNAL HEAD, POLYCARBONATE, LED, 1-FACE, 3-SECTION, MAST ARM MOUNTED	EACH	14		8	6
*	88040110	SIGNAL HEAD, POLYCARBONATE, LED, 1-FACE, 4-SECTION, BRACKET MOUNTED	EACH	2			2
*	88040120	SIGNAL HEAD, POLYCARBONATE, LED, 1-FACE, 4-SECTION, MAST ARM MOUNTED	EACH	2			2
*	88102825	PEDESTRIAN SIGNAL HEAD, POLYCARBONATE, LED, 1-FACE, BRACKET MOUNTED WITH COUNT DOWN TIMER	EACH	4			4
*	88200100	TRAFFIC SIGNAL BACKPLATE	EACH	34		14	20
*	88500500	INDUCTION LOOP DETECTOR AMPLIFIER	EACH	10		4	6
*	88600100	DETECTOR LOOP, TYPE I	FOOT	1799		750	1049

* SPECIALTY ITEM

SUMMARY OF QUANTITIES

	CODE NO.	ITEM	UNIT	TOTAL QUANTITY	CONSTR. CODE 0005 TAZEWELL CO. URBAN ROADWAY 80% FED 20% STATE	CONSTR. CODE 0021 TAZEWELL CO. EAST PEORIA URBAN TRAFFIC SIGNALS US 24 & GRANGE RD 80% FED 15% STATE 5% EAST PEORIA	CONSTR. CODE 0021 TAZEWELL CO. WASHINGTON URBAN TRAFFIC SIGNALS US 24 & CUMMINGS LN 80% FED 10% STATE 10% WASHINGTON
*	89500200	RELOCATE EXISTING PEDESTRIAN SIGNAL HEAD	EACH	1			1
*	89500300	RELOCATE EXISTING ILLUMINATED SIGN	EACH	1			1
*	89500400	RELOCATE EXISTING PEDESTRIAN PUSH-BUTTON	EACH	3			3
*	89502220	MODIFY EXISTING CONCRETE FOUNDATION	EACH	2			2
	89502375	REMOVE EXISTING TRAFFIC SIGNAL EQUIPMENT	EACH	2		1	1
	89502380	REMOVE EXISTING HANDHOLE	EACH	2		2	
	89502385	REMOVE EXISTING CONCRETE FOUNDATION	EACH	5		4	1
*	X0320023	CLOSED CIRCUIT TELEVISION DOME CAMERA, HD	EACH	2		1	1
*	X0326812	CAT 5 ETHERNET CABLE	FOOT	209.5		83.5	126
*	X1400434	DILEMMA ZONE DETECTION SYSTEM	EACH	4		2	2
	X2600002	RECOVERABLE DELINEATORS	EACH	140	140		
	X4400196	HOT-MIX ASPHALT SURFACE REMOVAL (SPECIAL)	SQ YD	4413	4413		
	X4402805	ISLAND REMOVAL	SQ FT	420	420		
	X4402815	ISLAND PAVEMENT REMOVAL AND REPLACEMENT	SQ FT	80			80

* SPECIALTY ITEM

SUMMARY OF QUANTITIES

CODE NO.	ITEM	UNIT	TOTAL QUANTITY	CONSTR. CODE 0005 TAZEWELL CO. URBAN ROADWAY 80% FED 20% STATE	CONSTR. CODE 0021 TAZEWELL CO. EAST PEORIA URBAN TRAFFIC SIGNALS US 24 & GRANGE RD 80% FED 15% STATE 5% EAST PEORIA	CONSTR. CODE 0021 TAZEWELL CO. WASHINGTON URBAN TRAFFIC SIGNALS US 24 & CUMMINGS LN 80% FED 10% STATE 10% WASHINGTON
X4421000	PARTIAL DEPTH PATCHING	TON	218	218		
X4421002	PARTIAL DEPTH PATCHING (SPECIAL)	SQ YD	778	778		
X4421026	CLASS B PATCHES, TYPE II, 16 INCH (SPECIAL)	SQ YD	490	490		
X4820110	HOT-MIX ASPHALT SHOULDER REMOVAL AND REPLACEMENT (SPECIAL)	SQ YD	300	300		
X6010100	CLEANING UNDERDRAIN OUTLETS	EACH	136	136		
X6020050	INLET BOXES TO BE ADJUSTED (SPECIAL)	EACH	1	1		
X6350204	LINEAR DELINEATOR PANELS, 4 INCH	EACH	30	30		
X6670201	OUTLET MARKER	EACH	136	136		
X7010216	TRAFFIC CONTROL AND PROTECTION, (SPECIAL)	L SUM	1	1		
X7011800	TRAFFIC CONTROL AND PROTECTION, STANDARD BLR 21	L SUM	1	1		
X8140234	REPLACE HANDHOLE COVER	EACH	2		2	
Z0001002	GUARDRAIL AGGREGATE EROSION CONTROL	TON	254	254		
Z0013798	CONSTRUCTION LAYOUT	L SUM	1	1		
Z0018911	DRILL AND GROUT #6 TIE BARS	EACH	1224	1224		

* SPECIALTY ITEM

SUMMARY OF QUANTITIES

	CODE NO.	ITEM	UNIT	TOTAL QUANTITY	CONSTR. CODE 0005 TAZEWELL CO. URBAN ROADWAY 80% FED 20% STATE	CONSTR. CODE 0021 TAZEWELL CO. EAST PEORIA URBAN TRAFFIC SIGNALS US 24 & GRANGE RD 80% FED 15% STATE 5% EAST PEORIA	CONSTR. CODE 0021 TAZEWELL CO. WASHINGTON URBAN TRAFFIC SIGNALS US 24 & CUMMINGS LN 80% FED 10% STATE 10% WASHINGTON
*	Z0033068	TRAFFIC SIGNAL BATTERY BACKUP SYSTEM	EACH	2		1	1
Ø	Z0076600	TRAINEES	HOUR	4,000	4,000		
Ø	Z0076604	TRAINEES - TRAINING PROGRAM GRADUATE	HOUR	4,000	4,000		

* SPECIALTY ITEM

Ø 0042

MODEL: Sheet 10
FILE NAME: c:\users\williams1\appdata\local\bentley\pro\pcwise\workingdir\bfwme-pw.bentley.com_bfwme-pw-411\tony.williams\d0215423\D468F92-sht-SOQ.dgn

BFW ENGINEERING & CONSULTING

USER NAME = sskinner	DESIGNED -	REVISED -	
	DRAWN -	REVISED -	
PLOT SCALE = $SCALE$	CHECKED -	REVISED -	
PLOT DATE = 8/27/2025	DATE -	REVISED -	

STATE OF ILLINOIS
DEPARTMENT OF TRANSPORTATION

SUMMARY OF QUANTITIES
US 24

SCALE: N.T.S. | SHEET 10 OF 10 SHEETS | STA. | TO STA.

F.A.P. RTE.	SECTION	COUNTY	TOTAL SHEETS	SHEET NO.
317	17(RS-6,TS-2);18(RS,TS)-2	TAZEWELL	85	13

CONTRACT NO. 68F92

ILLINOIS | FED. AID PROJECT

REV. 11/25/25 REV. 11/21/25

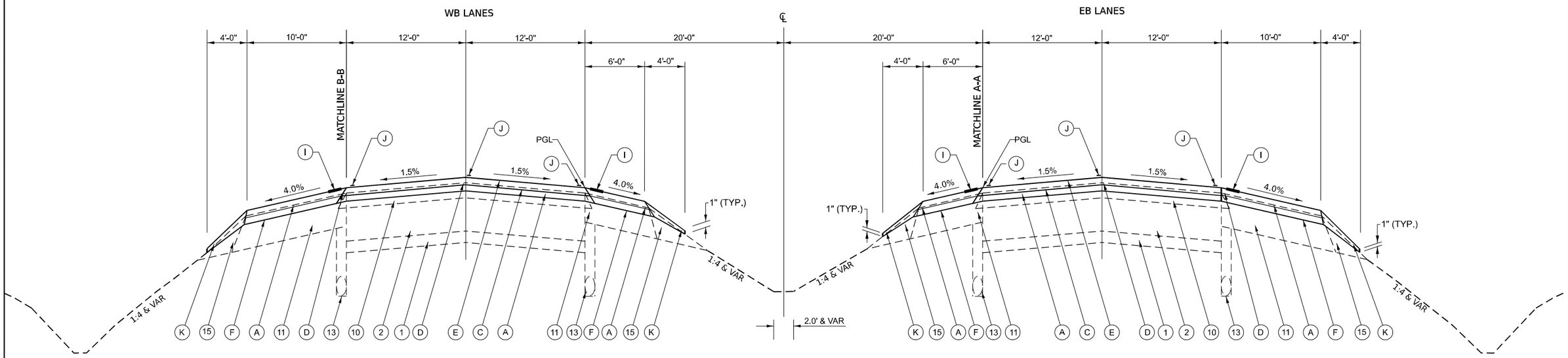

US 24 TYPICAL CROSS SECTION #1 – TANGENT SECTION

STA 340+60.00 TO STA 341+00.00 - HMA RAMP (SEE DETAILS)
STA 341+00.00 TO STA 342+63.00
STA 342+63.00 TO STA 352+17.00 - SEE MATCH LINES A-A & B-B FOR TURN LANES AT GROSENBACK ROAD
NOTE: MEDIAN WIDTH TAPERS FROM 40' TO 46' FROM STA 352+00.00 TO STA 358+00.00

LEGEND

1 EXISTING SUB-BASE GRANULAR MATERIAL, 4"
2 EXISTING PCC PAVEMENT, 10"
3 EXISTING HMA BASE COURSE, 9"
4 EXISTING LIME MODIFIED SOIL, 12"
5 EXISTING SUB-BASE GRANULAR MATERIAL, TYPE C (FA01)
6 EXISTING HMA PAVEMENT, 15.50"
7 EXISTING HMA PAVEMENT, 14.25"
8 EXISTING HMA PAVEMNET, 13.50"
9 EXISTING HMA PAVEMENT, 12.25"
10 EXISTING HMA SURFACE, 5"
11 EXISTING HMA SHOULDER, 9.5"
12 EXISTING HMA SHOULDER, 8.25"
13 EXISTING PIPE UNDERDRAIN, 4"
14 EXISTING CONCRETE RAISED MEDIAN
15 EXISTING AGGREGATE SHOULDERS
16 EXISTING SPBGR/TBT

A PROPOSED HOT-MIX ASPHALT SURFACE REMOVAL, 2"
B PROPOSED HOT-MIX ASPHALT SURFACE REMOVAL, 3.75"
C PROPOSED POLYMERIZED HOT-MIX ASPHALT BINDER COURSE, IL -9.5, N50, 1.75"
D PROPOSED HOT-MIX ASPHALT SURFACE REMOVAL (SPECIAL) - JOINT TRIMMING
E PROPOSED POLYMERIZED HOT-MIX ASPHALT SURFACE COURSE, IL -9.5, MIX "D", N50, 2.00"
F PROPOSED HOT-MIX ASPHALT SHOULDERS, 3.75"
G PROPOSED GUARDRAIL REMOVAL
H PROPOSED STEEL PLATE BEAM GUARDRAIL, TYPE A, 6' POSTS/ TRAFFIC BARRIER TERMINALS
I PROPOSED SHOULDER RUMBLE STRIPS, 16 INCH
J PROPOSED PAVEMENT MARKING LINE (SEE DETAILS & SCHEDULES FOR SIZES AND TYPES)
K PROPOSED AGGREGATE WEDGE SHOULDERS, TYPE B
L PROPOSED PAVED SHOULDER REMOVAL
M PROPOSED COMBINATION CONCRETE CURB & GUTTER TYPE B-6.24
N PROPOSED GUARDRAIL AGGREGATE EROSION CONTROL
O PROPOSED GEOTEXTILE FABRIC (STAPLED)

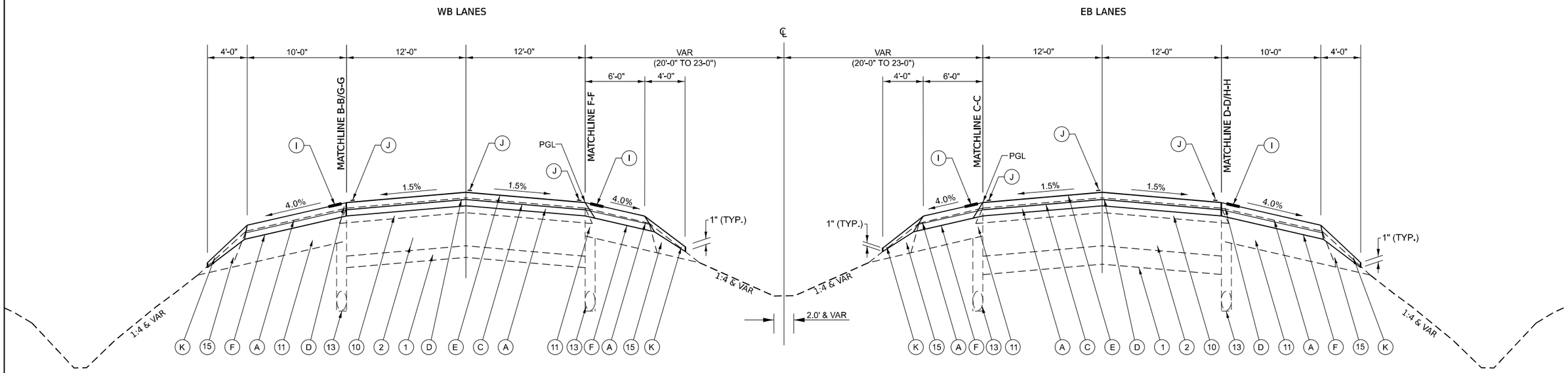

US 24 TYPICAL CROSS SECTION #2 – TANGENT SECTION

STA 352+17.00 TO STA 353+03.46 - SEE MATCH LINE B-B FOR RT TURN LANE AT GROSENBACK ROAD
NOTE: MEDIAN WIDTH TAPERS FROM 40' TO 46' FROM STA 352+00.00 TO STA 358+00.00
STA 353+03.46 TO STA 362+30.00
STA 362+30.00 TO STA 368+50.00 - 6" EXISTING HMA SURFACE ON WB LANES INSTEAD OF 5" AS SHOWN BY LEGEND
STA 368+50.00 TO STA 378+91.56 - 6" EXISTING HMA SURFACE ON WB LANES INSTEAD OF 5" AS SHOWN BY LEGEND; SEE MATCH LINES B-B & C-C FOR TURN LANES AT HOLLANDS GROVE ROAD
STA 378+91.56 TO STA 394+21.11 - 6" EXISTING HMA SURFACE ON WB LANES INSTEAD OF 5" AS SHOWN BY LEGEND
STA 394+21.11 TO STA 408+17.47 - 6" EXISTING HMA SURFACE ON WB LANES INSTEAD OF 5" AS SHOWN BY LEGEND; SEE MATCH LINES B-B, C-C, D-D, & F-F FOR TURN LANES AT GRANGE ROAD
STA 408+17.47 TO STA 410+22.54 - 6" EXISTING HMA SURFACE ON WB LANES INSTEAD OF 5" AS SHOWN BY LEGEND
STA 410+22.54 TO STA 413+19.00(BK) - 6" EXISTING HMA SURFACE ON WB LANES INSTEAD OF 5" AS SHOWN BY LEGEND; SEE MATCH LINES G-G, & H-H FOR RAMP TERMINALS AT RAMPS B & C AT BL-24 INTERCHANGE
STA EQU: STA 413+19.00(BK) = STA 2+46.00(AH)

LEGEND

1	EXISTING SUB-BASE GRANULAR MATERIAL, 4"
2	EXISTING PCC PAVEMENT, 10"
3	EXISTING HMA BASE COURSE, 9"
4	EXISTING LIME MODIFIED SOIL, 12"
5	EXISTING SUB-BASE GRANULAR MATERIAL, TYPE C (FA01)
6	EXISTING HMA PAVEMENT, 15.50"
7	EXISTING HMA PAVEMENT, 14.25"
8	EXISTING HMA PAVEMNET, 13.50"
9	EXISTING HMA PAVEMENT, 12.25"
10	EXISTING HMA SURFACE, 5"
11	EXISTING HMA SHOULDER, 9.5"
12	EXISTING HMA SHOULDER, 8.25"
13	EXISTING PIPE UNDERDRAIN, 4"
14	EXISTING CONCRETE RAISED MEDIAN
15	EXISTING AGGREGATE SHOULDERS
16	EXISTING SPBGR/TBT
A	PROPOSED HOT-MIX ASPHALT SURFACE REMOVAL, 2"
B	PROPOSED HOT-MIX ASPHALT SURFACE REMOVAL, 3.75"
C	PROPOSED POLYMERIZED HOT-MIX ASPHALT BINDER COURSE, IL -9.5, N50, 1.75"
D	PROPOSED HOT-MIX ASPHALT SURFACE REMOVAL (SPECIAL) - JOINT TRIMMING
E	PROPOSED POLYMERIZED HOT-MIX ASPHALT SURFACE COURSE, IL -9.5, MIX "D", N50, 2.00"
F	PROPOSED HOT-MIX ASPHALT SHOULDERS, 3.75"
G	PROPOSED GUARDRAIL REMOVAL
H	PROPOSED STEEL PLATE BEAM GUARDRAIL, TYPE A, 6' POSTS/ TRAFFIC BARRIER TERMINALS
I	PROPOSED SHOULDER RUMBLE STRIPS, 16 INCH
J	PROPOSED PAVEMENT MARKING LINE (SEE DETAILS & SCHEDULES FOR SIZES AND TYPES)
K	PROPOSED AGGREGATE WEDGE SHOULDERS, TYPE B
L	PROPOSED PAVED SHOULDER REMOVAL
M	PROPOSED COMBINATION CONCRETE CURB & GUTTER TYPE B-6.24
N	PROPOSED GUARDRAIL AGGREGATE EROSION CONTROL
O	PROPOSED GEOTEXTILE FABRIC (STAPLED)

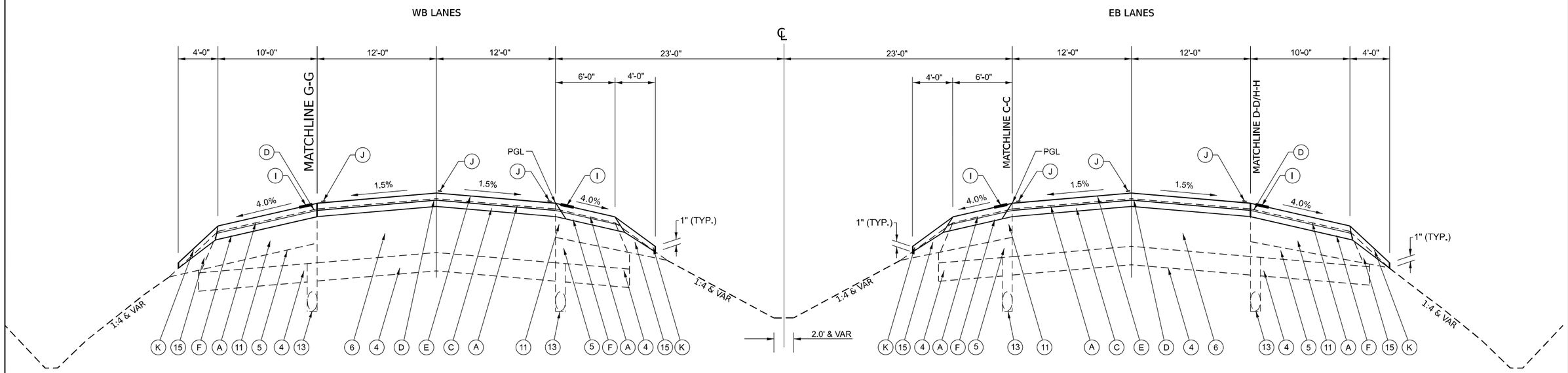

US 24 TYPICAL CROSS SECTION # 3 – TANGENT SECTION

STA 2+46.00(AH) TO STA 13+00.00 - SEE MATCH LINES G-G, & H-H FOR RAMP TERMINALS AT RAMPS B & C AT THE BL-24 INTERCHANGE

LEGEND

1 EXISTING SUB-BASE GRANULAR MATERIAL, 4"
2 EXISTING PCC PAVEMENT, 10"
3 EXISTING HMA BASE COURSE, 9"
4 EXISTING LIME MODIFIED SOIL, 12"
5 EXISTING SUB-BASE GRANULAR MATERIAL, TYPE C (FA01)
6 EXISTING HMA PAVEMENT, 15.50"
7 EXISTING HMA PAVEMENT, 14.25"
8 EXISTING HMA PAVEMNET, 13.50"
9 EXISTING HMA PAVEMENT, 12.25"
10 EXISTING HMA SURFACE, 5"
11 EXISTING HMA SHOULDER, 9.5"
12 EXISTING HMA SHOULDER, 8.25"
13 EXISTING PIPE UNDERDRAIN, 4"
14 EXISTING CONCRETE RAISED MEDIAN
15 EXISTING AGGREGATE SHOULDERS
16 EXISTING SPBGR/TBT

A PROPOSED HOT-MIX ASPHALT SURFACE REMOVAL, 2"
B PROPOSED HOT-MIX ASPHALT SURFACE REMOVAL, 3.75"
C PROPOSED POLYMERIZED HOT-MIX ASPHALT BINDER COURSE, IL -9.5, N50, 1.75"
D PROPOSED HOT-MIX ASPHALT SURFACE REMOVAL (SPECIAL) - JOINT TRIMMING
E PROPOSED POLYMERIZED HOT-MIX ASPHALT SURFACE COURSE, IL -9.5, MIX "D", N50, 2.00"
F PROPOSED HOT-MIX ASPHALT SHOULDERS, 3.75"
G PROPOSED GUARDRAIL REMOVAL
H PROPOSED STEEL PLATE BEAM GUARDRAIL, TYPE A, 6' POSTS/ TRAFFIC BARRIER TERMINALS
I PROPOSED SHOULDER RUMBLE STRIPS, 16 INCH
J PROPOSED PAVEMENT MARKING LINE (SEE DETAILS & SCHEDULES FOR SIZES AND TYPES)
K PROPOSED AGGREGATE WEDGE SHOULDERS, TYPE B
L PROPOSED PAVED SHOULDER REMOVAL
M PROPOSED COMBINATION CONCRETE CURB & GUTTER TYPE B-6.24
N PROPOSED GUARDRAIL AGGREGATE EROSION CONTROL
O PROPOSED GEOTEXTILE FABRIC (STAPLED)

MODEL: Typical Section Sheet 3
FILE NAME: pw://bfwms-pw.bentley.com:bfwms-pw01/Documents/BFW/PROJECTS/2025 PROJECTS/23330 - IDOT D4 PTB 213-039 WO#6 US 24/23330/IDOT/CAD_Sheets/D468F92-sHh-Typical.dgn

BFW ENGINEERING & CONSULTING

USER NAME = ShelbySkinner	DESIGNED -	REVISED -	
	DRAWN -	REVISED -	
PLOT SCALE = $SCALE$	CHECKED -	REVISED -	
PLOT DATE = 11/21/2025	DATE -	REVISED -	

STATE OF ILLINOIS
DEPARTMENT OF TRANSPORTATION

TYPICAL SECTION
US 24

SCALE: N.T.S. | SHEET 3 OF 14 SHEETS | STA. | TO STA.

F.A.P. RTE.	SECTION	COUNTY	TOTAL SHEETS	SHEET NO.
317	17(RS-6,TS-2);18(RS,TS)-2	TAZEWELL	85	16
		CONTRACT NO. 68F92		
	ILLINOIS	FED. AID PROJECT		

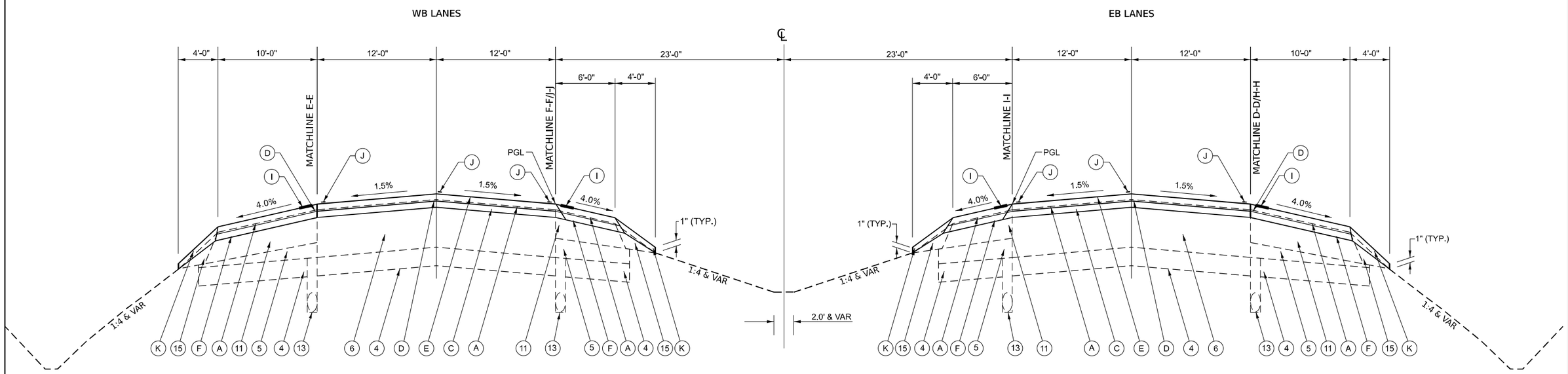

US 24 TYPICAL CROSS SECTION # 4– TANGENT SECTION

STA 13+00.00 TO STA 14+87.00 - SEE MATCH LINES G-G, & H-H FOR RAMP TERMINALS AT RAMPS B & C AT THE BL-24 INTERCHANGE
STA 14+87.00 TO STA 16+54.00
STA 16+54.00 TO STA 21+50.00 - SEE MATCH LINE F-F TURN LANES AT RAMP D AT THE BL-24 INTERCHANGE
STA 21+50.00 TO STA 22+20.00 - HMA SURFACE REMOVAL THICKNESS RAMP; SEE MATCH LINE F-F TURN LANES AT RAMP D AT THE BL-24 INTERCHANGE
STA 22+20.00 TO STA 23+30.00 - HMA SURFACE REMOVAL 3.75" INSTEAD OF 2"; SEE MATCH LINE F-F TURN LANES AT RAMP D AT THE BL-24 INTERCHANGE
STA 23+30.00 TO STA 23+62.19 - HMA SURFACE REMOVAL 3.75" INSTEAD OF 2"

STA 39+55.56 TO STA 40+30.00 - HMA SURFACE REMOVAL 3.75" INSTEAD OF 2"; SEE MATCH LINES D-D, AND I-I FOR TURN LANES AT SPRING CREEK ROAD
STA 40+30.00 TO STA 41+00.00 - HMA SURFACE REMOVAL THICKNESS RAMP (2" TO 3.75"); SEE MATCH LINES D-D, AND I-I FOR TURN LANES AT SPRING CREEK ROAD
STA 41+00.00 TO STA 47+00.00 - HMA SURFACE REMOVAL 3.75" INSTEAD OF 2"; SEE MATCH LINES D-D, E-E, I-I, AND J-J FOR TURN LANES AT SPRING CREEK ROAD
STA 47+00.00 TO STA 47+70.00 - HMA SURFACE REMOVAL THICKNESS RAMP (3.75" TO 2"); SEE MATCH LINES E-E, AND I-I FOR TURN LANES AT SPRING CREEK ROAD
STA 47+70.00 TO STA 54+07.00 - SEE MATCH LINES E-E, AND I-I FOR TURN LANES AT SPRING CREEK ROAD
STA 54+07.00 TO STA 72+70.23

STA 90+17.34 TO STA 90+31.54
STA 90+31.54 TO STA 94+00.00 - SEE MATCH LINES D-D, AND I-I FOR TURN LANES AT SPRING CREEK ROAD
STA 94+00.00 TO STA 94+70.00 - HMA SURFACE REMOVAL THICKNESS RAMP (2" TO 3.75"); SEE MATCH LINES D-D, AND I-I FOR TURN LANES AT CUMMINGS LANE
STA 94+70.00 TO STA 100+30.00 - HMA SURFACE REMOVAL 3.75" INSTEAD OF 2"; SEE MATCH LINES D-D, I-I, AND J-J FOR TURN LANES AT CUMMINGS LANE
STA 100+30.00 TO STA 100+70.00 - HMA BUTT JOINT (SEE DETAILS); SEE MATCH LINES J-J FOR LT TURN LANES AT CUMMINGS LANE

LEGEND

1	EXISTING SUB-BASE GRANULAR MATERIAL, 4"
2	EXISTING PCC PAVEMENT, 10"
3	EXISTING HMA BASE COURSE, 9"
4	EXISTING LIME MODIFIED SOIL, 12"
5	EXISTING SUB-BASE GRANULAR MATERIAL, TYPE C (FA01)
6	EXISTING HMA PAVEMENT, 15.50"
7	EXISTING HMA PAVEMENT, 14.25"
8	EXISTING HMA PAVEMNET, 13.50"
9	EXISTING HMA PAVEMENT, 12.25"
10	EXISTING HMA SURFACE, 5"
11	EXISTING HMA SHOULDER, 9.5"
12	EXISTING HMA SHOULDER, 8.25"
13	EXISTING PIPE UNDERDRAIN, 4"
14	EXISTING CONCRETE RAISED MEDIAN
15	EXISTING AGGREGATE SHOULDERS
16	EXISTING SPBGR/TBT

A	PROPOSED HOT-MIX ASPHALT SURFACE REMOVAL, 2"
B	PROPOSED HOT-MIX ASPHALT SURFACE REMOVAL, 3.75"
C	PROPOSED POLYMERIZED HOT-MIX ASPHALT BINDER COURSE, IL -9.5, N50, 1.75"
D	PROPOSED HOT-MIX ASPHALT SURFACE REMOVAL (SPECIAL) - JOINT TRIMMING
E	PROPOSED POLYMERIZED HOT-MIX ASPHALT SURFACE COURSE, IL -9.5, MIX "D", N50, 2.00"
F	PROPOSED HOT-MIX ASPHALT SHOULDERS, 3.75"
G	PROPOSED GUARDRAIL REMOVAL
H	PROPOSED STEEL PLATE BEAM GUARDRAIL, TYPE A, 6' POSTS/ TRAFFIC BARRIER TERMINALS
I	PROPOSED SHOULDER RUMBLE STRIPS, 16 INCH
J	PROPOSED PAVEMENT MARKING LINE (SEE DETAILS & SCHEDULES FOR SIZES AND TYPES)
K	PROPOSED AGGREGATE WEDGE SHOULDERS, TYPE B
L	PROPOSED PAVED SHOULDER REMOVAL
M	PROPOSED COMBINATION CONCRETE CURB & GUTTER TYPE B-6.24
N	PROPOSED GUARDRAIL AGGREGATE EROSION CONTROL
O	PROPOSED GEOTEXTILE FABRIC (STAPLED)

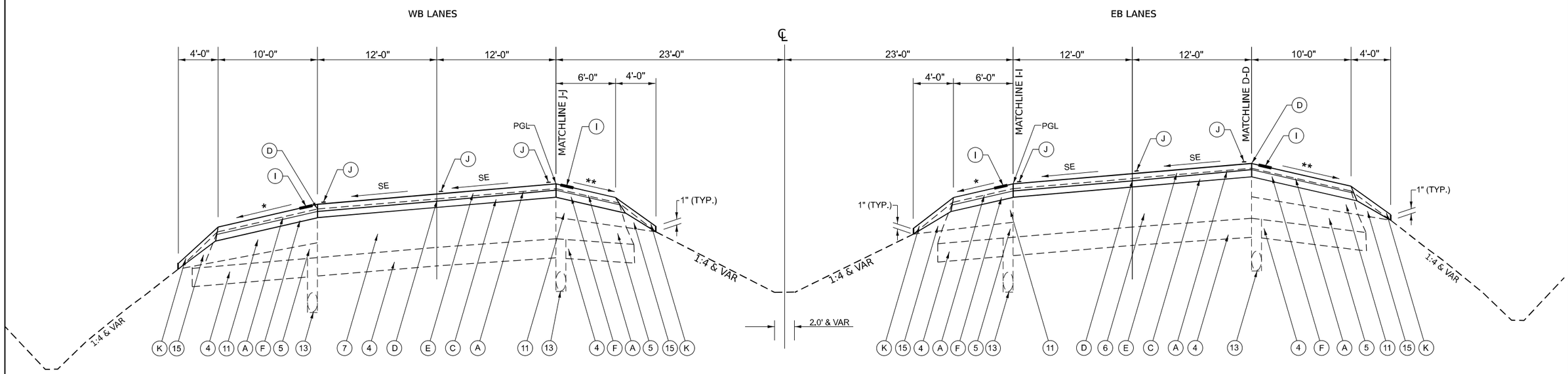

US 24 TYPICAL CROSS SECTION # 5 – CURVE TO THE LT /SE SECTION, HIGH SIDE RT

STA 23+62.19 TO STA 25+80.14 - SE TRANSITION; HMA SURFACE REMOVAL 3.75" INSTEAD OF 2"
STA 25+80.14 TO STA 26+50.00 - FULL SE = 3.40%; HMA SURFACE REMOVAL 3.75" INSTEAD OF 2"
STA 26+50.00 TO STA 27+20.00 - FULL SE = 3.40%; HMA SURFACE REMOVAL THICKNESS RAMP (3.75" TO 2" ; INTERSECTION AT SB BL-24 RAMP A (RT STA 27+04.00 TO RT STA 27+63.22)
STA 27+20.00 TO STA 36+29.96 - FULL SE = 3.40%; INTERSECTION AT SB BL-24 RAMP A (RT STA 27+04.00 TO RT STA 27+63.22)
STA 36+29.96 TO STA 37+37.61 - FULL SE = 3.40%; SEE MATCH LINES D-D, I-I, AND J-J FOR TURN LANES AT SPRING CREEK ROAD
STA 37+37.61 TO STA 39+55.56 - SE TRANSITION; SEE MATCH LINES D-D, I-I, AND J-J FOR TURN LANES AT SPRING CREEK ROAD

PROPOSED SHOULDER SLOPES IN SE SECTIONS:

* LOW SIDE OF SE: -
THE SHOULDER SLOPE SHALL BE THE SAME AS THE SE RATE, BUT NOT LESS THAN 4.0%.

** HIGH SIDE OF SE: -
WHEN SE RATE OF THE PAVEMENT IS BETWEEN 0.0% AND4.0%, THE SHOULDER SHALL BE SLOPED AT 4.0%; WHEN THE SE RATE OF THE PAVEMENT IS GREATER THAN 4.0%, THE SHOULDER SHALL BE SLOPED SO THE ALGEBRAIC DIFFERENCE BETWEEN THE PAVEMENT AND SHOULDER DOES NOT EXCEED 8.0%.

LEGEND

1	EXISTING SUB-BASE GRANULAR MATERIAL, 4"
2	EXISTING PCC PAVEMENT, 10"
3	EXISTING HMA BASE COURSE, 9"
4	EXISTING LIME MODIFIED SOIL, 12"
5	EXISTING SUB-BASE GRANULAR MATERIAL, TYPE C (FA01)
6	EXISTING HMA PAVEMENT, 15.50"
7	EXISTING HMA PAVEMENT, 14.25"
8	EXISTING HMA PAVEMNET, 13.50"
9	EXISTING HMA PAVEMENT, 12.25"
10	EXISTING HMA SURFACE, 5"
11	EXISTING HMA SHOULDER, 9.5"
12	EXISTING HMA SHOULDER, 8.25"
13	EXISTING PIPE UNDERDRAIN, 4"
14	EXISTING CONCRETE RAISED MEDIAN
15	EXISTING AGGREGATE SHOULDERS
16	EXISTING SPBGR/TBT
A	PROPOSED HOT-MIX ASPHALT SURFACE REMOVAL, 2"
B	PROPOSED HOT-MIX ASPHALT SURFACE REMOVAL, 3.75"
C	PROPOSED POLYMERIZED HOT-MIX ASPHALT BINDER COURSE, IL -9.5, N50, 1.75"
D	PROPOSED HOT-MIX ASPHALT SURFACE REMOVAL (SPECIAL) - JOINT TRIMMING
E	PROPOSED POLYMERIZED HOT-MIX ASPHALT SURFACE COURSE, IL -9.5, MIX "D", N50, 2.00"
F	PROPOSED HOT-MIX ASPHALT SHOULDERS, 3.75"
G	PROPOSED GUARDRAIL REMOVAL
H	PROPOSED STEEL PLATE BEAM GUARDRAIL, TYPE A, 6' POSTS/ TRAFFIC BARRIER TERMINALS
I	PROPOSED SHOULDER RUMBLE STRIPS, 16 INCH
J	PROPOSED PAVEMENT MARKING LINE (SEE DETAILS & SCHEDULES FOR SIZES AND TYPES)
K	PROPOSED AGGREGATE WEDGE SHOULDERS, TYPE B
L	PROPOSED PAVED SHOULDER REMOVAL
M	PROPOSED COMBINATION CONCRETE CURB & GUTTER TYPE B-6.24
N	PROPOSED GUARDRAIL AGGREGATE EROSION CONTROL
O	PROPOSED GEOTEXTILE FABRIC (STAPLED)

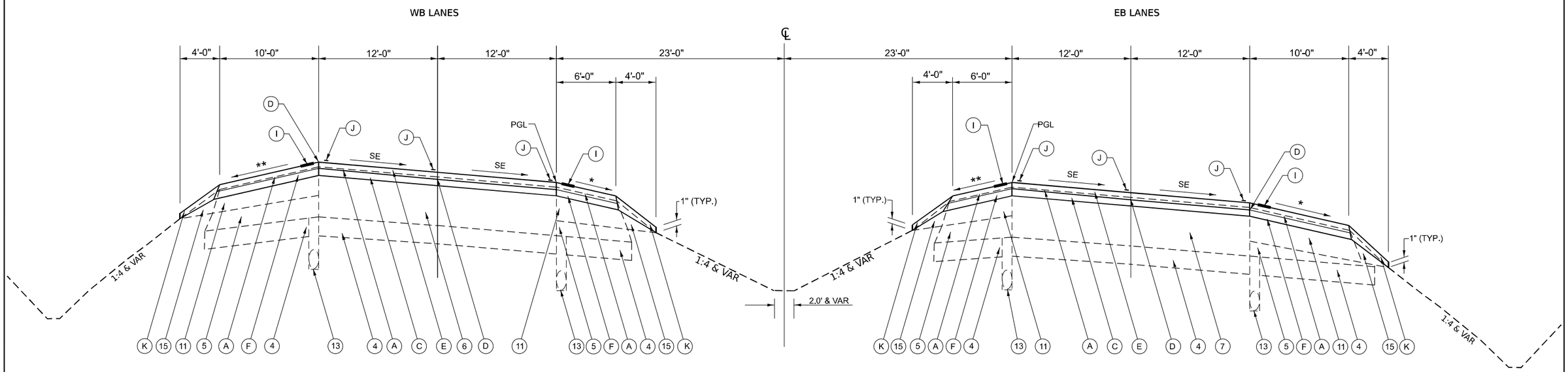

US 24 TYPICAL CROSS SECTION # 6 – CURVE TO THE RT /SE SECTION, HIGH SIDE LT

STA 72+52.15 TO STA 74+70.10 - SE TRANSITION
STA 74+70.10 TO STA 87+99.39 - FULL SE = 3.40%
STA 87+99.39 TO STA 90+17.34 - SE TRANSITION; SEE MATCH LINES D-D, AND I-I FOR TURN LANES AT CUMMINGS LANE

PROPOSED SHOULDER SLOPES IN SE SECTIONS:

* LOW SIDE OF SE: -
THE SHOULDER SLOPE SHALL BE THE SAME AS THE SE RATE, BUT NOT LESS THAN 4.0%.

** HIGH SIDE OF SE: -
WHEN SE RATE OF THE PAVEMENT IS BETWEEN 0.0% AND4.0%, THE SHOULDER SHALL BE SLOPED AT 4.0%; WHEN THE SE RATE OF THE PAVEMENT IS GREATER THAN 4.0%, THE SHOULDER SHALL BE SLOPED SO THE ALGEBRAIC DIFFERENCE BETWEEN THE PAVEMENT AND SHOULDER DOES NOT EXCEED 8.0%.

LEGEND

1	EXISTING SUB-BASE GRANULAR MATERIAL, 4"
2	EXISTING PCC PAVEMENT, 10"
3	EXISTING HMA BASE COURSE, 9"
4	EXISTING LIME MODIFIED SOIL, 12"
5	EXISTING SUB-BASE GRANULAR MATERIAL, TYPE C (FA01)
6	EXISTING HMA PAVEMENT, 15.50"
7	EXISTING HMA PAVEMENT, 14.25"
8	EXISTING HMA PAVEMNET, 13.50"
9	EXISTING HMA PAVEMENT, 12.25"
10	EXISTING HMA SURFACE, 5"
11	EXISTING HMA SHOULDER, 9.5"
12	EXISTING HMA SHOULDER, 8.25"
13	EXISTING PIPE UNDERDRAIN, 4"
14	EXISTING CONCRETE RAISED MEDIAN
15	EXISTING AGGREGATE SHOULDERS
16	EXISTING SPBGR/TBT
A	PROPOSED HOT-MIX ASPHALT SURFACE REMOVAL, 2"
B	PROPOSED HOT-MIX ASPHALT SURFACE REMOVAL, 3.75"
C	PROPOSED POLYMERIZED HOT-MIX ASPHALT BINDER COURSE, IL -9.5, N50, 1.75"
D	PROPOSED HOT-MIX ASPHALT SURFACE REMOVAL (SPECIAL) - JOINT TRIMMING
E	PROPOSED POLYMERIZED HOT-MIX ASPHALT SURFACE COURSE, IL -9.5, MIX "D", N50, 2.00"
F	PROPOSED HOT-MIX ASPHALT SHOULDERS, 3.75"
G	PROPOSED GUARDRAIL REMOVAL
H	PROPOSED STEEL PLATE BEAM GUARDRAIL, TYPE A, 6' POSTS/ TRAFFIC BARRIER TERMINALS
I	PROPOSED SHOULDER RUMBLE STRIPS, 16 INCH
J	PROPOSED PAVEMENT MARKING LINE (SEE DETAILS & SCHEDULES FOR SIZES AND TYPES)
K	PROPOSED AGGREGATE WEDGE SHOULDERS, TYPE B
L	PROPOSED PAVED SHOULDER REMOVAL
M	PROPOSED COMBINATION CONCRETE CURB & GUTTER TYPE B-6.24
N	PROPOSED GUARDRAIL AGGREGATE EROSION CONTROL
O	PROPOSED GEOTEXTILE FABRIC (STAPLED)

EB LT TURN LANE

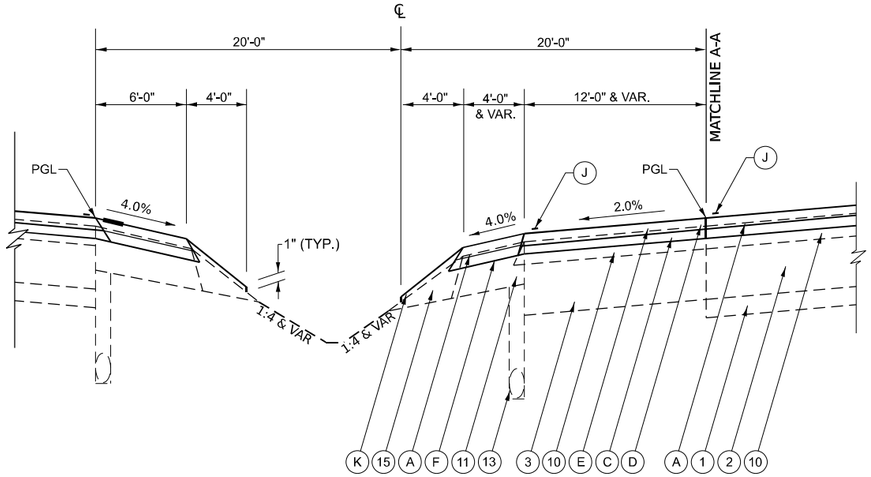

WB RT TURN LANE

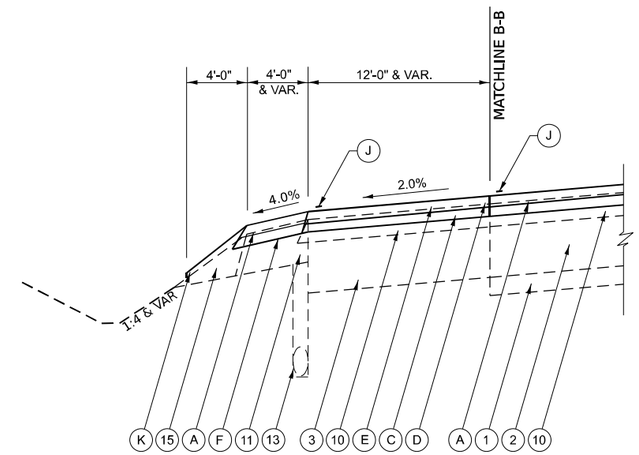

MATCHLINE A–A (LT TURN LANE ON EB LANES) – WEST OF GROSENBACH ROAD

RT STA 342+63.00 TO RT STA 344+93.00 - LT TURN LANE TAPER
RT STA 344+93.00 TO RT STA 346+88.00 - LT TURN LANE
RT STA 346+88.00 TO RT STA 348+38.00 - MEDIAN CROSSOVER AT GROSENBACH ROAD

MATCHLINE B–B (RT TURN LANE ON WB LANES) – EAST OF HOLLANDS GROVE ROAD

LT STA 372+13.40 TO LT STA 374+66.60 - INTERSECTION AT HOLLANDS GROVE ROAD
LT STA 374+66.60 TO LT STA 376+61.60 - RT TURN LANE
LT STA 376+61.60 TO LT STA 378+91.60 - RT TURN LANE TAPER

MATCHLINE B–B (RT TURN LANE ON WB LANES) – EAST OF GRANGE ROAD

LT STA 400+07.70 TO LT STA 402+62.90 - INTERSECTION AT GRANGE ROAD
LT STA 402+62.90 TO LT STA 404+57.90 - RT TURN LANE
LT STA 404+57.90 TO LT STA 406+87.90 - RT TURN LANE TAPER

MATCHLINE B–B (RT TURN LANE ON WB LANES) – EAST OF GROSENBACH ROAD

LT STA 346+28.60 TO LT STA 348+70.80 - INTERSECTION AT GROSENBACH ROAD
LT STA 348+70.80 TO LT STA 350+73.46 - RT TURN LANE
LT STA 350+73.46 TO LT STA 353+03.46 - RT TURN LANE TAPER

LEGEND

1 EXISTING SUB-BASE GRANULAR MATERIAL, 4"
2 EXISTING PCC PAVEMENT, 10"
3 EXISTING HMA BASE COURSE, 9"
4 EXISTING LIME MODIFIED SOIL, 12"
5 EXISTING SUB-BASE GRANULAR MATERIAL, TYPE C (FA01)
6 EXISTING HMA PAVEMENT, 15.50"
7 EXISTING HMA PAVEMENT, 14.25"
8 EXISTING HMA PAVEMNET, 13.50"
9 EXISTING HMA PAVEMENT, 12.25"
10 EXISTING HMA SURFACE, 5"
11 EXISTING HMA SHOULDER, 9.5"
12 EXISTING HMA SHOULDER, 8.25"
13 EXISTING PIPE UNDERDRAIN, 4"
14 EXISTING CONCRETE RAISED MEDIAN
15 EXISTING AGGREGATE SHOULDERS
16 EXISTING SPBGR/TBT

A PROPOSED HOT-MIX ASPHALT SURFACE REMOVAL, 2"
B PROPOSED HOT-MIX ASPHALT SURFACE REMOVAL, 3.75"
C PROPOSED POLYMERIZED HOT-MIX ASPHALT BINDER COURSE, IL -9.5, N50, 1.75"
D PROPOSED HOT-MIX ASPHALT SURFACE REMOVAL (SPECIAL) - JOINT TRIMMING
E PROPOSED POLYMERIZED HOT-MIX ASPHALT SURFACE COURSE, IL -9.5, MIX "D", N50, 2.00"
F PROPOSED HOT-MIX ASPHALT SHOULDERS, 3.75"
G PROPOSED GUARDRAIL REMOVAL
H PROPOSED STEEL PLATE BEAM GUARDRAIL, TYPE A, 6' POSTS/ TRAFFIC BARRIER TERMINALS
I PROPOSED SHOULDER RUMBLE STRIPS, 16 INCH
J PROPOSED PAVEMENT MARKING LINE (SEE DETAILS & SCHEDULES FOR SIZES AND TYPES)
K PROPOSED AGGREGATE WEDGE SHOULDERS, TYPE B
L PROPOSED PAVED SHOULDER REMOVAL
M PROPOSED COMBINATION CONCRETE CURB & GUTTER TYPE B-6.24
N PROPOSED GUARDRAIL AGGREGATE EROSION CONTROL
O PROPOSED GEOTEXTILE FABRIC (STAPLED)

EB LT TURN LANE

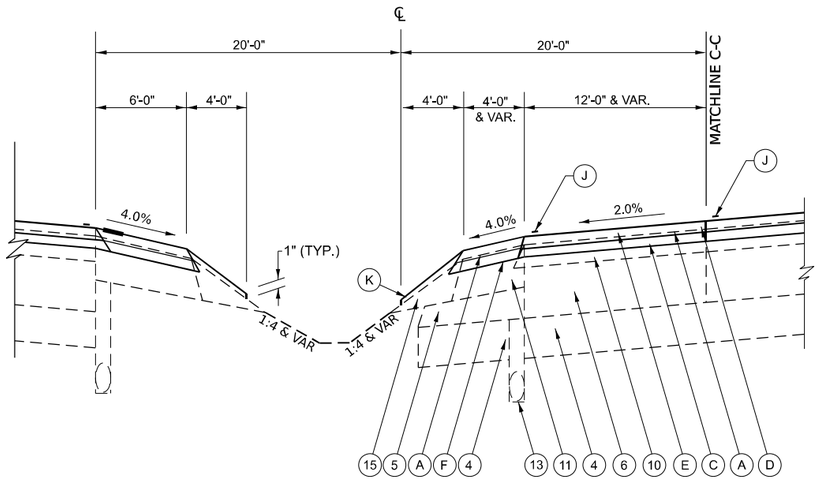

EB RT TURN LANE

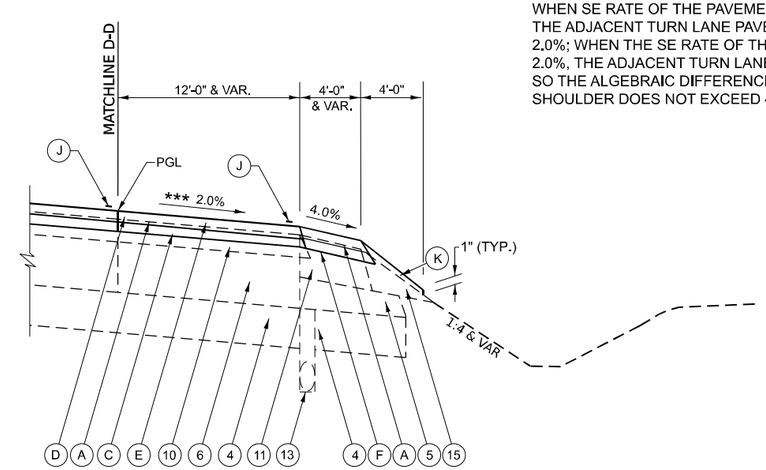

*** **PROPOSED TURN LANE PAVEMENT SLOPES IN SE SECTIONS:**
HIGH SIDE OF SE: -
WHEN SE RATE OF THE PAVEMENT IS BETWEEN 0.0% AND 2.0%, THE ADJACENT TURN LANE PAVEMENT SHALL BE SLOPED AT 2.0%; WHEN THE SE RATE OF THE PAVEMENT IS GREATER THAN 2.0%, THE ADJACENT TURN LANE PAVEMENT SHALL BE SLOPED SO THE ALGEBRAIC DIFFERENCE BETWEEN THE PAVEMENT AND SHOULDER DOES NOT EXCEED 4.0%.

MATCHLINE C–C (LT TURN LANE ON EB LANES) – WEST OF HOLLANDS GROVE ROAD

RT STA 368+50.00 TO RT STA 370+80.00 - LT TURN LANE TAPER
RT STA 370+80.00 TO RT STA 372+75.00 - LT TURN LANE
RT STA 372+75.00 TO RT STA 374+40.00 - MEDIAN CROSSOVER AT HOLLANDS GROVE ROAD

MATCHLINE C–C (LT TURN LANE ON EB LANES) – WEST OF GRANGE ROAD

RT STA 396+41.53 TO RT STA 398+71.53 - LT TURN LANE TAPER
RT STA 398+71.53 TO RT STA 400+66.63 - LT TURN LANE
RT STA 400+66.63 TO RT STA 402+31.02 - MEDIAN CROSSOVER AT GRANGE ROAD

MATCHLINE D–D (RT TURN LANE ON EB LANES) – WEST OF SPRING CREEK ROAD

RT STA 36+29.96 TO RT STA 39+29.96 - RT TURN LANE TAPER; ADJUST CROSS SLOPE FOR SE (4.0% MAX BREAK OVER BETWEEN ML & TURN LANE)
RT STA 39+29.96 TO RT STA 42+35.40 - RT TURN LANE; HMA SURFACE REMOVAL THICKNESS RAMP (RT STA 40+30.00 TO RT STA 41+00.00; 2" TO 3.75"); ADJUST CROSS SLOPE FOR SE (4.0% MAX BREAK OVER BETWEEN ML & TURN LANE)
RT STA 42+35.40 TO RT STA 44+88.41 - INTERSECTION AT SPRING CREEK ROAD; HMA SURFACE REMOVAL 3.75"

MATCHLINE D–D (RT TURN LANE ON EB LANES) – WEST OF CUMMINGS LANE

RT STA 90+31.54 TO RT STA 93+31.54 - RT TURN LANE TAPER; HMA SURFACE REMOVAL 2"
RT STA 93+31.54 TO RT STA 96+31.54 - RT TURN LANE; HMA SURFACE REMOVAL THICKNESS RAMP, 2" TO STA 94+00.00, 3.75" AFTER STA 94+70.00
RT STA 96+31.54 TO RT STA 98+98.20 - INTERSECTION AT CUMMINGS LANE; HMA SURFACE REMOVAL 3.75" INSTEAD OF 2"

MATCHLINE D–D (RT TURN LANE ON EB LANES) – WEST OF GRANGE ROAD

RT STA 394+21.11 TO RT STA 397+21.11 - RT TURN LANE TAPER
RT STA 397+21.11 TO RT STA 400+21.11 - RT TURN LANE
RT STA 400+21.11 TO RT STA 402+76.28 - INTERSECTION AT GRANGE ROAD; HMA SURFACE REMOVAL 2"

LEGEND

1	EXISTING SUB-BASE GRANULAR MATERIAL, 4"
2	EXISTING PCC PAVEMENT, 10"
3	EXISTING HMA BASE COURSE, 9"
4	EXISTING LIME MODIFIED SOIL, 12"
5	EXISTING SUB-BASE GRANULAR MATERIAL, TYPE C (FA01)
6	EXISTING HMA PAVEMENT, 15.50"
7	EXISTING HMA PAVEMENT, 14.25"
8	EXISTING HMA PAVEMNET, 13.50"
9	EXISTING HMA PAVEMENT, 12.25"
10	EXISTING HMA SURFACE, 5"
11	EXISTING HMA SHOULDER, 9.5"
12	EXISTING HMA SHOULDER, 8.25"
13	EXISTING PIPE UNDERDRAIN, 4"
14	EXISTING CONCRETE RAISED MEDIAN
15	EXISTING AGGREGATE SHOULDERS
16	EXISTING SPBGR/TBT
A	PROPOSED HOT-MIX ASPHALT SURFACE REMOVAL, 2"
B	PROPOSED HOT-MIX ASPHALT SURFACE REMOVAL, 3.75"
C	PROPOSED POLYMERIZED HOT-MIX ASPHALT BINDER COURSE, IL -9.5, N50, 1.75"
D	PROPOSED HOT-MIX ASPHALT SURFACE REMOVAL (SPECIAL) - JOINT TRIMMING
E	PROPOSED POLYMERIZED HOT-MIX ASPHALT SURFACE COURSE, IL -9.5, MIX "D", N50, 2.00"
F	PROPOSED HOT-MIX ASPHALT SHOULDERS, 3.75"
G	PROPOSED GUARDRAIL REMOVAL
H	PROPOSED STEEL PLATE BEAM GUARDRAIL, TYPE A, 6' POSTS/ TRAFFIC BARRIER TERMINALS
I	PROPOSED SHOULDER RUMBLE STRIPS, 16 INCH
J	PROPOSED PAVEMENT MARKING LINE (SEE DETAILS & SCHEDULES FOR SIZES AND TYPES)
K	PROPOSED AGGREGATE WEDGE SHOULDERS, TYPE B
L	PROPOSED PAVED SHOULDER REMOVAL
M	PROPOSED COMBINATION CONCRETE CURB & GUTTER TYPE B-6.24
N	PROPOSED GUARDRAIL AGGREGATE EROSION CONTROL
O	PROPOSED GEOTEXTILE FABRIC (STAPLED)

WB RT TURN LANE

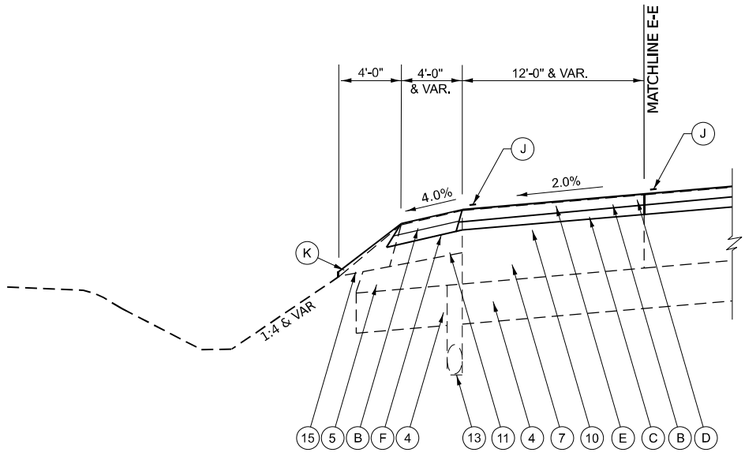

MATCHLINE E–E (RT TURN LANE ON WB LANES) – EAST OF SPRING CREEK ROAD

LT STA 42+53.67 TO LT STA 45+12.12 - INTERSECTION AT SPRING CREEK ROAD; HMA SURFACE REMOVAL 3.75" INSTEAD OF 2"
LT STA 45+12.12 TO LT STA 48+12.12 - RT TURN LANE; HMA SURFACE REMOVAL 3.75" INSTEAD OF 2"
LT STA 48+12.12 TO LT STA 51+12.12 - RT TURN LANE TAPER

WB LT TURN LANE

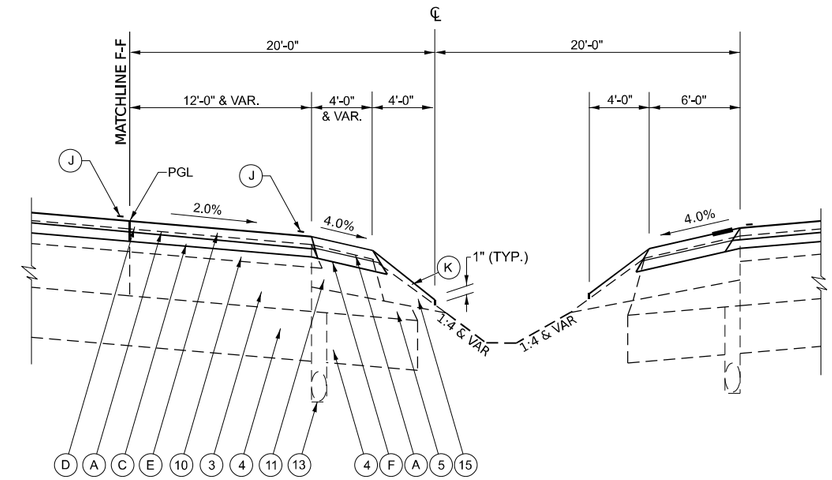

MATCHLINE F–F (EXIT RAMP FROM US 24 WB LANES TO SB BL–24 ACROSS US 24 EB LANES) – RAMP D

LT & RT STA 16+54.00 TO LT & RT STA 17+30.00 - INTERSECTION AT SB BL-24 RAMP D
LT STA 17+30.00 TO LT STA 20+30.00 - LT TURN LANE
LT STA 20+30.00 TO LT STA 21+50.00 - PORTION OF RT TURN LANE TAPER
LT STA 21+50.00 TO LT STA 22+20.00 - PORTION OF RT TURN LANE TAPER; HMA SURFACE REMOVAL THICKNESS RAMP (2" TO 3.75")
LT STA 22+20.00 TO LT STA 23+30.00 - PORTION LT TURN LANE TAPER; HMA SURFACE REMOVAL 3.75"

MATCHLINE F–F (LT TURN LANE ON WB LANES) – EAST OF GRANGE ROAD

LT STA 400+52.98 TO LT STA 402+00.90 - MEDIAN CROSSOVER AT GRANGE ROAD
LT STA 402+00.90 TO LT STA 404+17.47 - LT TURN LANE
LT STA 404+17.47 TO LT STA 407+17.47 - LT TURN LANE TAPER; HMA SURFACE REMOVAL 2"

LEGEND

1 EXISTING SUB-BASE GRANULAR MATERIAL, 4"
2 EXISTING PCC PAVEMENT, 10"
3 EXISTING HMA BASE COURSE, 9"
4 EXISTING LIME MODIFIED SOIL, 12"
5 EXISTING SUB-BASE GRANULAR MATERIAL, TYPE C (FA01)
6 EXISTING HMA PAVEMENT, 15.50"
7 EXISTING HMA PAVEMENT, 14.25"
8 EXISTING HMA PAVEMNET, 13.50"
9 EXISTING HMA PAVEMENT, 12.25"
10 EXISTING HMA SURFACE, 5"
11 EXISTING HMA SHOULDER, 9.5"
12 EXISTING HMA SHOULDER, 8.25"
13 EXISTING PIPE UNDERDRAIN, 4"
14 EXISTING CONCRETE RAISED MEDIAN
15 EXISTING AGGREGATE SHOULDERS
16 EXISTING SPBGR/TBT

A PROPOSED HOT-MIX ASPHALT SURFACE REMOVAL, 2"
B PROPOSED HOT-MIX ASPHALT SURFACE REMOVAL, 3.75"
C PROPOSED POLYMERIZED HOT-MIX ASPHALT BINDER COURSE, IL -9.5, N50, 1.75"
D PROPOSED HOT-MIX ASPHALT SURFACE REMOVAL (SPECIAL) - JOINT TRIMMING
E PROPOSED POLYMERIZED HOT-MIX ASPHALT SURFACE COURSE, IL -9.5, MIX "D", N50, 2.00"
F PROPOSED HOT-MIX ASPHALT SHOULDERS, 3.75"
G PROPOSED GUARDRAIL REMOVAL
H PROPOSED STEEL PLATE BEAM GUARDRAIL, TYPE A, 6' POSTS/ TRAFFIC BARRIER TERMINALS
I PROPOSED SHOULDER RUMBLE STRIPS, 16 INCH
J PROPOSED PAVEMENT MARKING LINE (SEE DETAILS & SCHEDULES FOR SIZES AND TYPES)
K PROPOSED AGGREGATE WEDGE SHOULDERS, TYPE B
L PROPOSED PAVED SHOULDER REMOVAL
M PROPOSED COMBINATION CONCRETE CURB & GUTTER TYPE B-6.24
N PROPOSED GUARDRAIL AGGREGATE EROSION CONTROL
O PROPOSED GEOTEXTILE FABRIC (STAPLED)

RAMP B

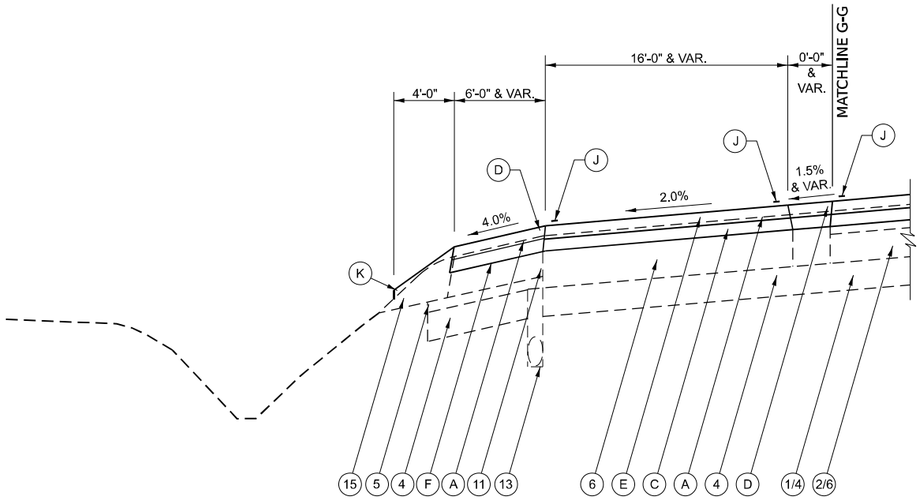

RAMP C

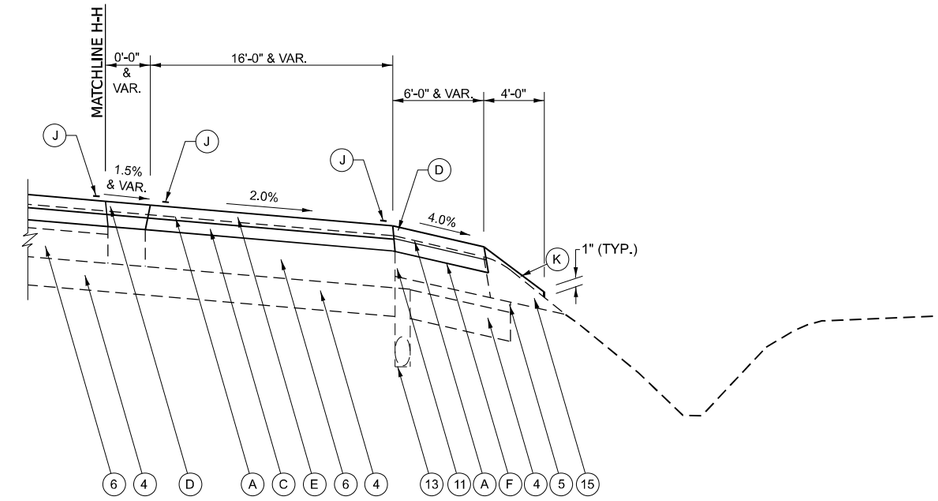

MATCHLINE G–G (ENTRANCE RAMP ON WB LANES FROM NB BL–24) – RAMP B

LT STA 410+22.54 TO LT STA 9+00.00 - RAMP TERMINAL PAVEMENT (1' STUB TO 20.00' WIDTH AT END OF PAVEMENT AND START OF HMA SHOULDER IN GORE AREA; RAMP B STA 36+36.99 TO STA 26+87.18)
STA EQU: STA 413+19.00(BK) = STA 2+46.00(AH)
LT STA 9+00.00 TO LT STA 12+26.30 - HMA SHOULDER IN GORE AREA; 16.0' WIDE RAMP PAVEMENT (RAMP B STA 26+87.78 TO STA 23+60.00)
LT STA 12+26.30 TO LT STA 12+66.30 - HMA SURFACE REMOVAL THICKNESS TAPER TO BUTT JOINT ON RAMP B, 40' LONG (RAMP B STA 23+60.00 TO STA 23+20.00)

MATCHLINE H–H (EXIT RAMP ON EB LANES TO SB BL–24) – RAMP C

RT STA 412+52.07 TO RT STA 5+79.52 - RAMP TERMINAL PAVEMENT (1' STUB TO 22.33' WIDTH AT END OF PAVEMENT AND START OF HMA SHOULDER IN GORE AREA; RAMP C STA 0+00.00 TO STA 3+99.38)
STA EQU: STA 413+19.00(BK) = STA 2+46.00(AH)
RT STA 5+79.52 TO RT STA 8+70.00 - HMA SHOULDER IN GORE AREA; 16.0' WIDE RAMP PAVEMENT (RAMP C STA 3+99.38 TO STA 6+90.06)
RT STA 8+70.00 TO STA 9+10.00 - HMA HMA SURFACE REMOVAL THICKNESS TAPER TO BUTT JOINT ON RAMP C, 40' LONG (RAMP C STA 6+90.06 TO STA 7+30.06)

LEGEND

1	EXISTING SUB-BASE GRANULAR MATERIAL, 4"
2	EXISTING PCC PAVEMENT, 10"
3	EXISTING HMA BASE COURSE, 9"
4	EXISTING LIME MODIFIED SOIL, 12"
5	EXISTING SUB-BASE GRANULAR MATERIAL, TYPE C (FA01)
6	EXISTING HMA PAVEMENT, 15.50"
7	EXISTING HMA PAVEMENT, 14.25"
8	EXISTING HMA PAVEMNET, 13.50"
9	EXISTING HMA PAVEMENT, 12.25"
10	EXISTING HMA SURFACE, 5"
11	EXISTING HMA SHOULDER, 9.5"
12	EXISTING HMA SHOULDER, 8.25"
13	EXISTING PIPE UNDERDRAIN, 4"
14	EXISTING CONCRETE RAISED MEDIAN
15	EXISTING AGGREGATE SHOULDERS
16	EXISTING SPBGR/TBT
A	PROPOSED HOT-MIX ASPHALT SURFACE REMOVAL, 2"
B	PROPOSED HOT-MIX ASPHALT SURFACE REMOVAL, 3.75"
C	PROPOSED POLYMERIZED HOT-MIX ASPHALT BINDER COURSE, IL -9.5, N50, 1.75"
D	PROPOSED HOT-MIX ASPHALT SURFACE REMOVAL (SPECIAL) - JOINT TRIMMING
E	PROPOSED POLYMERIZED HOT-MIX ASPHALT SURFACE COURSE, IL -9.5, MIX "D", N50, 2.00"
F	PROPOSED HOT-MIX ASPHALT SHOULDERS, 3.75"
G	PROPOSED GUARDRAIL REMOVAL
H	PROPOSED STEEL PLATE BEAM GUARDRAIL, TYPE A, 6' POSTS/ TRAFFIC BARRIER TERMINALS
I	PROPOSED SHOULDER RUMBLE STRIPS, 16 INCH
J	PROPOSED PAVEMENT MARKING LINE (SEE DETAILS & SCHEDULES FOR SIZES AND TYPES)
K	PROPOSED AGGREGATE WEDGE SHOULDERS, TYPE B
L	PROPOSED PAVED SHOULDER REMOVAL
M	PROPOSED COMBINATION CONCRETE CURB & GUTTER TYPE B-6.24
N	PROPOSED GUARDRAIL AGGREGATE EROSION CONTROL
O	PROPOSED GEOTEXTILE FABRIC (STAPLED)

****** PROPOSED TURN LANE PAVEMENT SLOPES IN SE SECTIONS:**
LOW SIDE OF SE: -
THE AJACENT TURN LANE PAVEMENT SLOPE SHALL BE THE SAME AS THE SE RATE, BUT NOT LESS THEN 2.0%

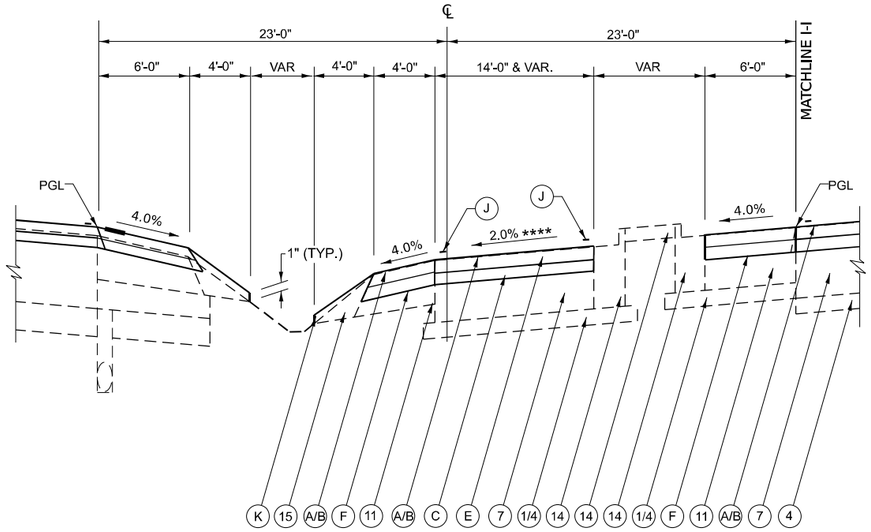

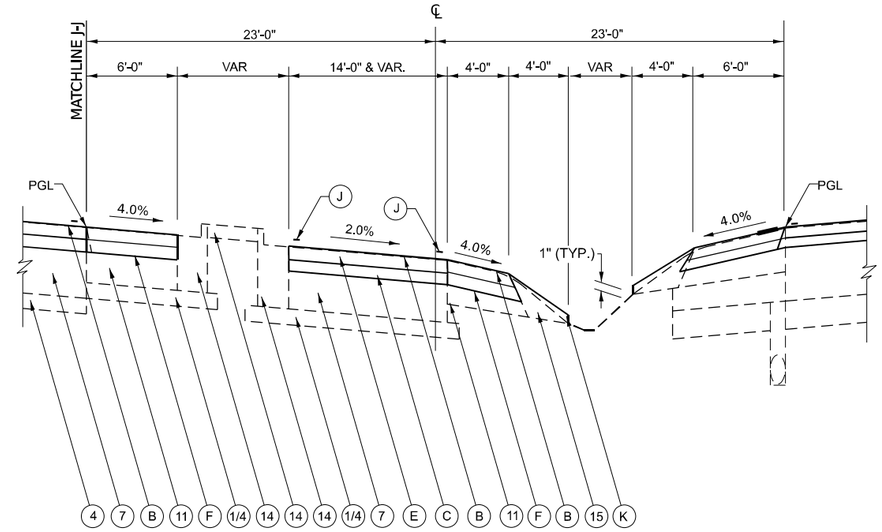

MATCH LINE I–I (LT TURN LANE & LT MERGE LANE ON EB LANES) – AT SPRING CREEK ROAD

RT STA 37+16.00 TO RT STA 54+07.00 - INTERSECTION AT SPRING CREEK ROAD; HMA SURFACE REMOVAL 2" TO STA 40+30.00, 2" TO 3.75" TO STA 41+00.00, 3.75" TO STA 47+00.00, 3.75" TO 2" TO STA 47+70.00, 2" TO STA 54+07.00; PAVEMENT ON 12" SUB-BASE GRANULAR MATERIAL; SOLID CONCRETE MEDIAN TYPE SM-4.24.

MATCH LINE I–I (LT TURN LANE ON EB LANES) – WEST OF CUMMINGS LANE

RT STA 90+87.60 TO RT STA 93+36.08 - LT TURN LANE TAPER; HMA SURFACE REMOVAL
RT STA 93+36.08 TO RT STA 98+26.79 - BURRIED LT TURN LANE, & INTERSECTION AT CUMMINGS LANE; HMA SURFACE REMOVAL 2" TO STA 94+00.00, 2" TO 3.75" TO STA 94+70.00, 3.75" TO STA 98+26.79

MATCH LINE J–J (LT TURN LANE ON WB LANES) – EAST OF CUMMINGS LANE

LT STA 96+79.21 TO LT STA 100+30.00 - MEDIAN CROSSOVER & LT TURN LANE AT CUMMINGS LANE
LT STA 100+30.00 TO LT STA 100+70.00 - LT TURN LANE AT CUMMINGS LANE; HMA BUTT JOINT (SEE DETAILS)

MATCH LINE J–J (LT TURN LANE ON WB LANES) – AT SPRING CREEK ROAD

LT STA 41+73.27 TO LT STA 45+32.58 - SB MEDIAN CROSSOVER AT SPRING CREEK ROAD

LEGEND

1 EXISTING SUB-BASE GRANULAR MATERIAL, 4"
2 EXISTING PCC PAVEMENT, 10"
3 EXISTING HMA BASE COURSE, 9"
4 EXISTING LIME MODIFIED SOIL, 12"
5 EXISTING SUB-BASE GRANULAR MATERIAL, TYPE C (FA01)
6 EXISTING HMA PAVEMENT, 15.50"
7 EXISTING HMA PAVEMENT, 14.25"
8 EXISTING HMA PAVEMNET, 13.50"
9 EXISTING HMA PAVEMENT, 12.25"
10 EXISTING HMA SURFACE, 5"
11 EXISTING HMA SHOULDER, 9.5"
12 EXISTING HMA SHOULDER, 8.25"
13 EXISTING PIPE UNDERDRAIN, 4"
14 EXISTING CONCRETE RAISED MEDIAN
15 EXISTING AGGREGATE SHOULDERS
16 EXISTING SPBGR/TBT

A PROPOSED HOT-MIX ASPHALT SURFACE REMOVAL, 2"
B PROPOSED HOT-MIX ASPHALT SURFACE REMOVAL, 3.75"
C PROPOSED POLYMERIZED HOT-MIX ASPHALT BINDER COURSE, IL -9.5, N50, 1.75"
D PROPOSED HOT-MIX ASPHALT SURFACE REMOVAL (SPECIAL) - JOINT TRIMMING
E PROPOSED POLYMERIZED HOT-MIX ASPHALT SURFACE COURSE, IL -9.5, MIX "D", N50, 2.00"
F PROPOSED HOT-MIX ASPHALT SHOULDERS, 3.75"
G PROPOSED GUARDRAIL REMOVAL
H PROPOSED STEEL PLATE BEAM GUARDRAIL, TYPE A, 6' POSTS/ TRAFFIC BARRIER TERMINALS
I PROPOSED SHOULDER RUMBLE STRIPS, 16 INCH
J PROPOSED PAVEMENT MARKING LINE (SEE DETAILS & SCHEDULES FOR SIZES AND TYPES)
K PROPOSED AGGREGATE WEDGE SHOULDERS, TYPE B
L PROPOSED PAVED SHOULDER REMOVAL
M PROPOSED COMBINATION CONCRETE CURB & GUTTER TYPE B-6.24
N PROPOSED GUARDRAIL AGGREGATE EROSION CONTROL
O PROPOSED GEOTEXTILE FABRIC (STAPLED)

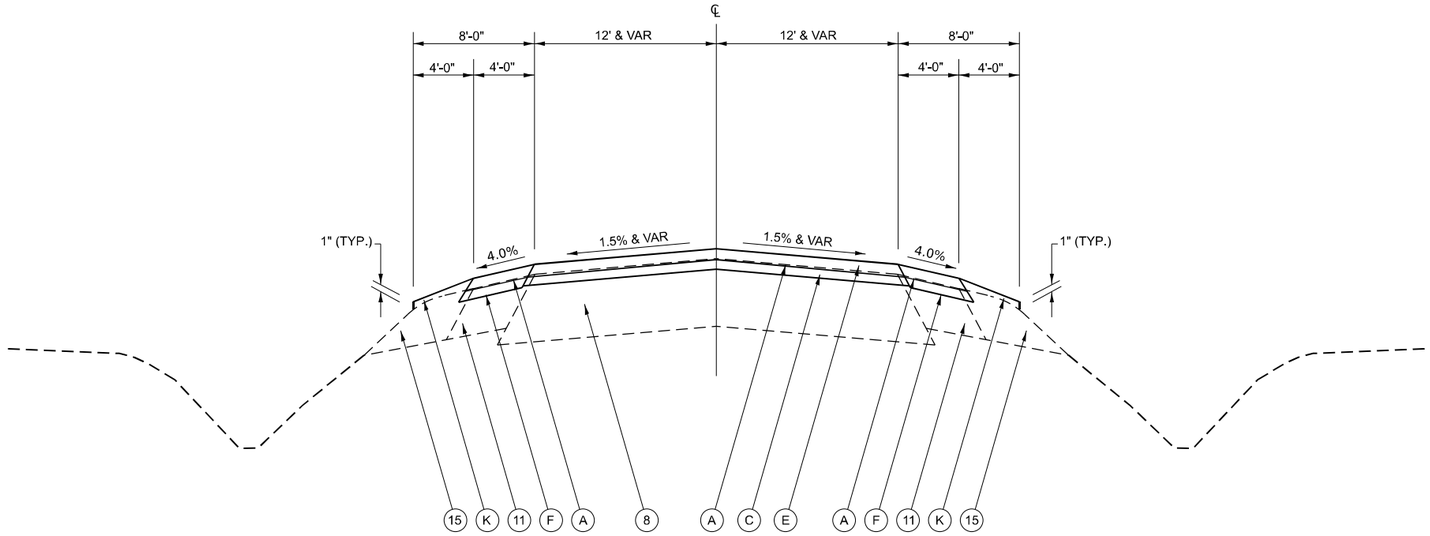

US 24 SIDE ROAD TYPICAL CROSS SECTION # 1 – TANGENT SECTION

GROSENBACH ROAD (N & S)
STA 10+44.00 TO STA 11+37.00
STA 11+37.00 TO STA 11+77.00 - HMA RAMP (SEE DETAILS)

HOLLANDS GROVE ROAD (N & S)
STA 10+47.00 TO STA 10+82.00
STA 10+82.00 TO STA 11+22.00 - HMA RAMP (SEE DETAILS)

GRANGE ROAD (N & S)
STA 8+00.00 TO STA 8+40.00 - HMA RAMP (SEE DETAILS)
STA 8+40.00 TO STA 9+52.96
STA 10+47.04 TO STA 11+30.00
STA 11+30.00 TO STA 11+70.00 - HMA RAMP (SEE DETAILS)

SPRING CREEK ROAD (N & S)
STA 7+87.00 TO STA 8+27.00 - HMA RAMP (SEE DETAILS)
STA 8+27.00 TO STA 9+51.52 - HMA SURFACE REMOVAL 3.75" INSTEAD OF 2"
STA 10+48.47 TO STA 11+97.00 - HMA SURFACE REMOVAL 3.75" INSTEAD OF 2"
STA 11+97.00 TO STA 12+37.00 - HMA RAMP (SEE DETAILS)

CUMMINGS LANE (N & S)
STA 208+00.00 TO STA 209+12.48 - 36' & VAR WIDTH PAVEMENT; CROWN IN CENTER OF LEFT TURN LANE; HMA SURFACE REMOVAL 3.75" INSTEAD OF 2"
STA 209+12.48 TO STA 209+52.48 - HMA RAMP (SEE DETAILS)

LEGEND

1 EXISTING SUB-BASE GRANULAR MATERIAL, 4"
2 EXISTING PCC PAVEMENT, 10"
3 EXISTING HMA BASE COURSE, 9"
4 EXISTING LIME MODIFIED SOIL, 12"
5 EXISTING SUB-BASE GRANULAR MATERIAL, TYPE C (FA01)
6 EXISTING HMA PAVEMENT, 15.50"
7 EXISTING HMA PAVEMENT, 14.25"
8 EXISTING HMA PAVEMNET, 13.50"
9 EXISTING HMA PAVEMENT, 12.25"
10 EXISTING HMA SURFACE, 5"
11 EXISTING HMA SHOULDER, 9.5"
12 EXISTING HMA SHOULDER, 8.25"
13 EXISTING PIPE UNDERDRAIN, 4"
14 EXISTING CONCRETE RAISED MEDIAN
15 EXISTING AGGREGATE SHOULDERS
16 EXISTING SPBGR/TBT

A PROPOSED HOT-MIX ASPHALT SURFACE REMOVAL, 2"
B PROPOSED HOT-MIX ASPHALT SURFACE REMOVAL, 3.75"
C PROPOSED POLYMERIZED HOT-MIX ASPHALT BINDER COURSE, IL -9.5, N50, 1.75"
D PROPOSED HOT-MIX ASPHALT SURFACE REMOVAL (SPECIAL) - JOINT TRIMMING
E PROPOSED POLYMERIZED HOT-MIX ASPHALT SURFACE COURSE, IL -9.5, MIX "D", N50, 2.00"
F PROPOSED HOT-MIX ASPHALT SHOULDERS, 3.75"
G PROPOSED GUARDRAIL REMOVAL
H PROPOSED STEEL PLATE BEAM GUARDRAIL, TYPE A, 6' POSTS/ TRAFFIC BARRIER TERMINALS
I PROPOSED SHOULDER RUMBLE STRIPS, 16 INCH
J PROPOSED PAVEMENT MARKING LINE (SEE DETAILS & SCHEDULES FOR SIZES AND TYPES)
K PROPOSED AGGREGATE WEDGE SHOULDERS, TYPE B
L PROPOSED PAVED SHOULDER REMOVAL
M PROPOSED COMBINATION CONCRETE CURB & GUTTER TYPE B-6.24
N PROPOSED GUARDRAIL AGGREGATE EROSION CONTROL
O PROPOSED GEOTEXTILE FABRIC (STAPLED)

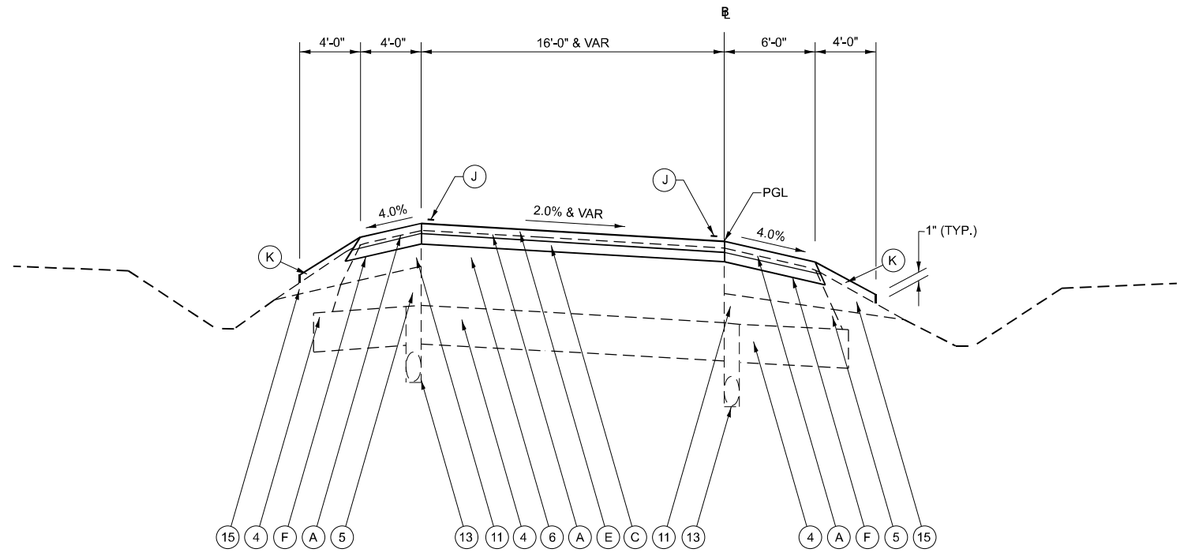

US 24 SIDE ROAD TYPICAL CROSS SECTION # 2 – TANGENT SECTION

RAMP D
STA 0+02.00 TO STA 0+50.00
STA 0+50.00 TO STA 0+90.00 - HMA RAMP (SEE DETAILS)
RAMP A
STA 16+50.00 TO STA 16+90.00 - HMA RAMP (SEE DETAILS)
STA 16+90.00 TO STA 18+15.75

LEGEND

1 EXISTING SUB-BASE GRANULAR MATERIAL, 4"
2 EXISTING PCC PAVEMENT, 10"
3 EXISTING HMA BASE COURSE, 9"
4 EXISTING LIME MODIFIED SOIL, 12"
5 EXISTING SUB-BASE GRANULAR MATERIAL, TYPE C (FA01)
6 EXISTING HMA PAVEMENT, 15.50"
7 EXISTING HMA PAVEMENT, 14.25"
8 EXISTING HMA PAVEMNET, 13.50"
9 EXISTING HMA PAVEMENT, 12.25"
10 EXISTING HMA SURFACE, 5"
11 EXISTING HMA SHOULDER, 9.5"
12 EXISTING HMA SHOULDER, 8.25"
13 EXISTING PIPE UNDERDRAIN, 4"
14 EXISTING CONCRETE RAISED MEDIAN
15 EXISTING AGGREGATE SHOULDERS
16 EXISTING SPBGR/TBT

A PROPOSED HOT-MIX ASPHALT SURFACE REMOVAL, 2"
B PROPOSED HOT-MIX ASPHALT SURFACE REMOVAL, 3.75"
C PROPOSED POLYMERIZED HOT-MIX ASPHALT BINDER COURSE, IL -9.5, N50, 1.75"
D PROPOSED HOT-MIX ASPHALT SURFACE REMOVAL (SPECIAL) - JOINT TRIMMING
E PROPOSED POLYMERIZED HOT-MIX ASPHALT SURFACE COURSE, IL -9.5, MIX "D", N50, 2.00"
F PROPOSED HOT-MIX ASPHALT SHOULDERS, 3.75"
G PROPOSED GUARDRAIL REMOVAL
H PROPOSED STEEL PLATE BEAM GUARDRAIL, TYPE A, 6' POSTS/ TRAFFIC BARRIER TERMINALS
I PROPOSED SHOULDER RUMBLE STRIPS, 16 INCH
J PROPOSED PAVEMENT MARKING LINE (SEE DETAILS & SCHEDULES FOR SIZES AND TYPES)
K PROPOSED AGGREGATE WEDGE SHOULDERS, TYPE B
L PROPOSED PAVED SHOULDER REMOVAL
M PROPOSED COMBINATION CONCRETE CURB & GUTTER TYPE B-6.24
N PROPOSED GUARDRAIL AGGREGATE EROSION CONTROL
O PROPOSED GEOTEXTILE FABRIC (STAPLED)

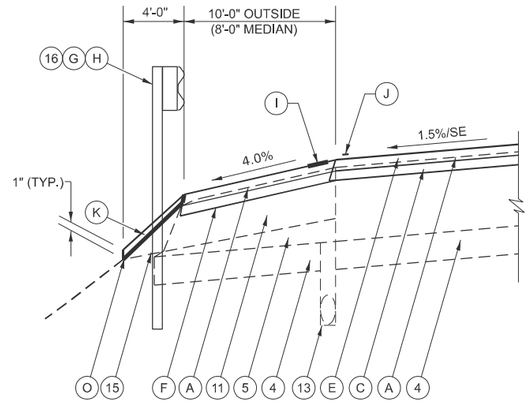

US 24 GUARDRAIL SECTION

LT STA 360+10.00 TO LT STA 368+72.50 - WB OUTSIDE SHOULDER
RT STA 21+31.50 TO RT STA 23+44.00 - EB MEDIAN SHOULDER
LT STA 23+50.00 TO LT STA 25+62.50 - WB MEDIAN SHOULDER
LT STA 29+39.00 TO LT STA 29+50.00 - WB OUTSIDE SHOULDER
LT STA 29+50.00 TO LT STA 33+40.00 - WB OUTSIDE SHOULDER - SEE C&G SECTION
LT STA 33+40.00 TO LT STA 35+89.00 - WB OUTSIDE SHOULDER
LT STA 80+61.00 TO LT STA 84+73.50 - WB OUTSIDE SHOULDER

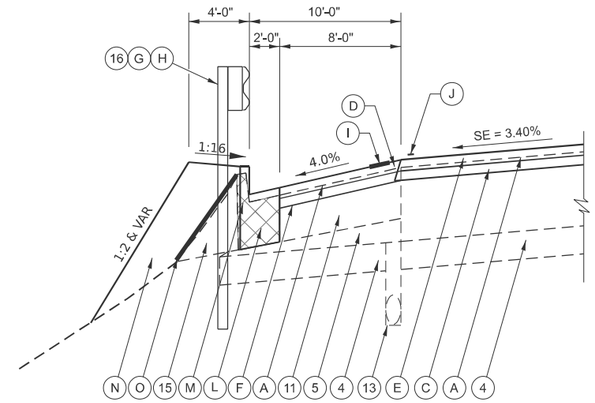

US 24 GUARDRAIL SECTION W/NEW C&G – OUTSIDE SHOULDER

LT STA 29+50.00 TO LT STA 30+50.00 - WB OUTSIDE SHOULDER
LT STA 30+50.00 TO LT STA 30+60.00 - WB OUTSIDE SHOULDER; EX INLET TO BE ADJUSTED SEE DETAILS
LT STA 30+60.00 TO LT STA 33+40.00 - WB OUTSIDE SHOULDER

GENERAL NOTES: GUARDRAIL AGGREGATE EROSION CONTROL

1.THIS WORK SHALL CONSIST OF GRADING AS NEEDED, FURNISHING AND INSTALLING GEOTEXTILE FABRIC AND STAPLES, AND FURNISHING, PLACING AND SHAPING CRUSHED AGGREGATE AROUND AND BEHIND STEEL PLATE BEAM GUARDRAIL POSTS IN ACCORDANCE WITH PLAN DETAILS.

2.BEFORE PLACING THE AGGREGATE AND THE GEOTEXTILE FABRIC, WEEDS AND GRASS SHALL BE REMOVED FROM THE AREA TO BE COVERED.

3.AFTER THE AREA HAS BEEN PREPARED, AND IN A DRY CONDITION, THE GEOTEXTILE FABRIC SHALL BE PLACED WITH A 12 MINIMUM OVERLAP. A KNIFE CUT FOR GUARDRAIL POST INSTALLATION IS NECESSARY.

4.THE AGGREGATE SHALL BE DEPOSITED, COMPACTED AND SHAPED BY EITHER MECHANICAL OR HAND METHODS, IN A MANNER REASONABLY TRUE TO LINE AND GRADE.

5.THE CONTRACTOR SHALL HAVE THE OPTION OF PLACING THE GUARDRAIL BEFORE OR AFTER THE GEOTEXTILE FABRIC AND AGGREGATE ARE IN PLACE. IF THE GUARDRAIL IS PLACED AFTER THE GEOTEXTILE FABRIC AND AGGREGATE, THEN ANY VOIDS MUST BE FILLED AND THE AGGREGATE RETURNED TO LINE AND GRADE.

6.MATERIALS SHALL MEET THE FOLLOWING REQUIREMENTS:

A. THE CRUSHED AGGREGATE SHALL BE CA1 GRADATION IN ACCORDANCE WITH ARTICLE 1004.01(C) OF THE STANDARD SPECIFICATIONS.

B. THE GEOTEXTILE FABRIC SHALL BE NONWOVEN FABRIC IN ACCORDANCE WITH ARTICLE 1080.02 OF THE STANDARD SPECIFICATIONS.

LEGEND

1	EXISTING SUB-BASE GRANULAR MATERIAL, 4"
2	EXISTING PCC PAVEMENT, 10"
3	EXISTING HMA BASE COURSE, 9"
4	EXISTING LIME MODIFIED SOIL, 12"
5	EXISTING SUB-BASE GRANULAR MATERIAL, TYPE C (FA01)
6	EXISTING HMA PAVEMENT, 15.50"
7	EXISTING HMA PAVEMENT, 14.25"
8	EXISTING HMA PAVEMNET, 13.50"
9	EXISTING HMA PAVEMENT, 12.25"
10	EXISTING HMA SURFACE, 5"
11	EXISTING HMA SHOULDER, 9.5"
12	EXISTING HMA SHOULDER, 8.25"
13	EXISTING PIPE UNDERDRAIN, 4"
14	EXISTING CONCRETE RAISED MEDIAN
15	EXISTING AGGREGATE SHOULDERS
16	EXISTING SPBGR/TBT
A	PROPOSED HOT-MIX ASPHALT SURFACE REMOVAL, 2"
B	PROPOSED HOT-MIX ASPHALT SURFACE REMOVAL, 3.75"
C	PROPOSED POLYMERIZED HOT-MIX ASPHALT BINDER COURSE, IL -9.5, N50, 1.75"
D	PROPOSED HOT-MIX ASPHALT SURFACE REMOVAL (SPECIAL) - JOINT TRIMMING
E	PROPOSED POLYMERIZED HOT-MIX ASPHALT SURFACE COURSE, IL -9.5, MIX "D", N50, 2.00"
F	PROPOSED HOT-MIX ASPHALT SHOULDERS, 3.75"
G	PROPOSED GUARDRAIL REMOVAL
H	PROPOSED STEEL PLATE BEAM GUARDRAIL, TYPE A, 6' POSTS/ TRAFFIC BARRIER TERMINALS
I	PROPOSED SHOULDER RUMBLE STRIPS, 16 INCH
J	PROPOSED PAVEMENT MARKING LINE (SEE DETAILS & SCHEDULES FOR SIZES AND TYPES)
K	PROPOSED AGGREGATE WEDGE SHOULDERS, TYPE B
L	PROPOSED PAVED SHOULDER REMOVAL
M	PROPOSED COMBINATION CONCRETE CURB & GUTTER TYPE B-6.24
N	PROPOSED GUARDRAIL AGGREGATE EROSION CONTROL
O	PROPOSED GEOTEXTILE FABRIC (STAPLED)

PAVEMENT PATCHING SCHEDULE

LOCATION			LANE	LENGTH	WIDTH	NUMBER OF PATCHES OF THE SAME SIZE AS SHOWN	PARTIAL OR FULL DEPTH PATCHES	AREA	CLASS B PATCHES, TYPE II, 16 INCH (SPECIAL)	PARTIAL DEPTH PATCHING (SPL) - 5" MIN BEFORE HMA SURF REM	PARTIAL DEPTH PATCHING - 5" MIN BEFORE HMA SURF REM	SAW CUTS (2 X L + 3 X W)	DRILL AND GROUT #6 TIE BARS (20 PER PATCH 12' WIDE)	HMA SHLD REM & REPL (SPECIAL)	ISLAND REMOVAL	CONCRETE MEDIAN, TY SM-6.24 (FOR CORNER ISLAND REPL)	PORTLAND CEMENT CONCRETE BASE COURSE 12" (REPL ISLAND WITH PAVT)	ISLAND PAVEMENT REM & REPL	RECOVERABLE DELIN - SURFACE MOUNTED ON CORNER ISLANDS	COMB CURB AND GUTTER REMOVAL	PAVED SHOULDER REMOVAL	SIDEWALK REMOVAL	COMB CONCRETE CURB AND GUTTER, TY B-6.24 (INCLUDES FLARES & TRANSITIONS; ALL PAID PER FOOT WITH THIS PAY ITEM)	PORTLAND CEMENT CONCRETE SIDEWALK 4 INCH	DETECT WARNINGS
									X4421026	X4421002	X4421000	44213200	Z0018911	X4820110	X4402805	60623200	35300700	X4402815	X2600002	44000500	44004250	44000600	60605000	42400100	42400800
STATION	TO	STATION	DRIVING/ PASSING	FOOT	FOOT	#	PARTIAL/FULL DEPTH	SQ YD	SQ YD	SQ YD	TON	FOOT	EACH	SQ YD	SQ FT	SQ FT	SQ YD	SQ FT	EACH	FOOT	(SQ YD)	SQ FT	FOOT	SQ FT	SQ FT
TAZEWELL COUNTY																										
US 24 EBL																										
341+00.00		347+63.00	DRIVING	6.0	12.0	7	FULL DEPTH	56.0	56.00			336.0	140													
341+00.00		347+63.00	PASSING	6.0	12.0	4	FULL DEPTH	32.0	32.00			192.0	80													
347+63.00		352+17.00	DRIVING	6.0	12.0	0	FULL DEPTH	0.0	0.00																	
347+63.00		352+17.00	PASSING	6.0	12.0	0	FULL DEPTH	0.0	0.00																	
352+17.00		373+50.00	DRIVING	4.0	12.0	5	PARTIAL DEPTH	26.7		26.7	7.5															
352+17.00		373+50.00	PASSING	4.0	12.0	3	PARTIAL DEPTH	16.0		16.0	4.5															
373+50.00		401+42.00	DRIVING	4.0	12.0	2	PARTIAL DEPTH	10.7		10.7	3.0															
373+50.00		401+42.00	PASSING	4.0	12.0	0	PARTIAL DEPTH	0.0		0.0	0.0															
401+42.00		23+67.71	DRIVING	4.0	12.0	2	PARTIAL DEPTH	10.7		10.7	3.0															
401+42.00		23+67.71	PASSING	4.0	12.0	2	PARTIAL DEPTH	10.7		10.7	3.0															
23+67.71		99+17.23	DRIVING	4.0	12.0	5	PARTIAL DEPTH	26.7		26.7	7.5															
23+67.71		99+17.23	PASSING	4.0	12.0	3	PARTIAL DEPTH	16.0		16.0	4.5															
US 24 WBL																										
341+00.00		347+63.00	DRIVING	6.0	12.0	7	FULL DEPTH	56.0	56.0			336.0	140													
341+00.00		347+63.00	PASSING	6.0	12.0	5	FULL DEPTH	40.0	40.0			240.0	100													
347+63.00		373+50.00	DRIVING	6.0	12.0	13	FULL DEPTH	104.0	104.0			624.0	260													
347+63.00		373+50.00	PASSING	6.0	12.0	5	FULL DEPTH	40.0	40.0			240.0	100													
373+50.00		413+19.00	DRIVING	6.0	12.0	6	FULL DEPTH	48.0	48.0			288.0	120													
373+50.00		413+19.00	PASSING	6.0	12.0	3	FULL DEPTH	24.0	24.0			144.0	60													
2+46.00		401+42.00	DRIVING	4.0	12.0	35	PARTIAL DEPTH	186.7		186.7	52.3															
2+46.00		401+42.00	PASSING	4.0	12.0	14	PARTIAL DEPTH	74.7		74.7	20.9															
401+42.00		23+67.71	PASSING	6.0	12.0	1	FULL DEPTH	8.0	8.0			48.0	20													
401+42.00		23+67.71	DRIVING	4.0	12.0	18	PARTIAL DEPTH	96.0		96.0	26.9															
401+42.00		23+67.71	PASSING	4.0	12.0	10	PARTIAL DEPTH	53.3		53.3	14.9															
23+67.71		99+17.23	DRIVING	4.0	12.0	5	PARTIAL DEPTH	26.7		26.7	7.5															
23+67.71		99+17.23	DRIVING	20.0	6.0	1	PARTIAL DEPTH	13.3		13.3	3.7															
23+67.71		99+17.23	DRIVING	20.0	12.0	1	PARTIAL DEPTH	26.7		26.7	7.5															
23+67.71		99+17.23	PASSING	4.0	12.0	5	PARTIAL DEPTH	26.7		26.7	7.5															
23+67.71		99+17.23	PASSING	8.0	12.0	1	PARTIAL DEPTH	10.7		10.7	3.0															
23+67.71		99+17.23	PASSING	12.0	12.0	1	PARTIAL DEPTH	16.0		16.0	4.5															
GROSENBACH ROAD - NORTH															95	95			3							
HOLLANDS GROVE ROAD - NORTH															95	95			3							
GRANGE ROAD - SOUTH															115		12.8		3							
GRANGE ROAD - NORTH															115		12.8		3							
CUMMINGS ROAD - SOUTH																		15	3	15	7.8	258.0	195.0	223.5	16.0
CUMMINGS ROAD - EB & WB LT TURN LANES																		45				276.0		276.0	32.0
CUMMINGS ROAD - NORTH																		20	3	15	7.8	256.0	135.0	212.0	48.0
SUB-TOTAL (URBAN AREA - EAST PEORIA; STA 431+00 TO STA 35+30) =									408.0	510.4	142.9	2448.0	1020	0.0	420.0	190.0	25.6	0	12	0.0	0.0	0.0	0.0	0.0	0.0
ESTIMATED CONTINGENCY (20%) =									81.6	102.1	28.6	489.6	204	200.0											
TOTAL (URBAN AREA - EAST PEORIA; STA 431+00 TO STA 35+30) =									489.6	612.5	171.5	2937.6	1224	200.0	420.0	190.0	25.6	0	12	0.0	0.0	0.0	0.0	0.0	0.0
SUB-TOTAL (URBAN AREA - WASHINGTON; STA 35+30 TO STA 99+17.23) =									0.0	137.6	38.5	0.0	0	0.0	0.0	0.0	0.0	80	6	30.0	15.6	790.0	330.0	711.5	96.0
ESTIMATED CONTINGENCY (20%) =									0.0	27.5	7.7	0.0	0	100.0											
TOTAL (URBAN AREA - WASHINGTON; STA 35+30 TO STA 99+17.23) =									0.0	165.1	46.2	0.0	0	100.0	0.0	0.0	0.0	80	6	30.0	15.6	790.0	330.0	711.5	96.0
GRAND TOTAL =									490	778	218	2938	1224	300	420	190	26	80	18	30	16	790	330	712	96

MODEL: Sheet 1
FILE NAME: c:\users\twilliams1\appdata\local\bentley\projectwise\workingdir\bfwme-pw.bentley.com_bfwme-pw-011\tony.williams\d0215423\D468F92-sht-Schedules.dgn

BFW ENGINEERING & CONSULTING

USER NAME = sskinner	DESIGNED -	REVISED -
	DRAWN -	REVISED -
PLOT SCALE = $SCALE$	CHECKED -	REVISED -
PLOT DATE = 8/28/2025	DATE -	REVISED -

STATE OF ILLINOIS
DEPARTMENT OF TRANSPORTATION

SCHEDULE OF QUANTITIES
US 24

SCALE: N.T.S. | SHEET 1 OF 13 SHEETS | STA. | TO STA.

F.A.P. RTE.	SECTION	COUNTY	TOTAL SHEETS	SHEET NO.
317	17(RS-6,TS-2);18(RS,TS)-2	TAZEWELL	85	28
		CONTRACT NO. 68F92		
		ILLINOIS FED. AID PROJECT		

PAVING SCHEDULE - PAVEMENT AREAS

LOCATION				LENGTH	PAVEMENT WIDTH	AREA	COMMENTS	TEMP RAMP	HMA SURF REM, BUTT JOINT	HMA SURF REM, 2.0"	HMA SURF REM, 3.75"	HOT MIX ASPHALT SURFACE REMOVAL (SPECIAL) - FOR CL JOINT TRIMMING - SEE SPECIAL PROV	POLY BIT MATLS (TACK COAT) - BETWEEN ALL LIFTS (0.08 LB/SF ON MILLED SURF.; 0.08 LB/SF BETWEEN LIFTS)	MATL TRANS. DEVICE	POLY HMA BIND CSE, IL-9.5, N50, 1.75"	POLY HMA SURF CSE, IL-9.5, MIX D, N50, 2"	AGG SURFACE COURSE, TYPE B	INCIDENTAL HOT-MIX ASPHALT SURFACING
PAY CODE NO.								40600990	40600982	44000157	44000164	X4400196	40600295	40600405	40603205	40604160	40200800	40800050
LT/RT	STATION	TO	STATION	(FOOT)	(FOOT)	(SQ FT)		(SQ YD)	(SQ YD)	(SQ YD)	(SQ YD)	(SQ YD)	(POUND)	(TON)	(TON)	(TON)	(TON)	(TON)
TAZEWELL COUNTY																		
US 24 EBL																		
RT	340+60.00		341+00.00	40.00	24.0	960.0	MILL 2" TO 0.25" - RAMP	17.8	111.1	0	0	2.2	80.0	12.4	0.0	12.4	0	0
RT	341+00.00		413+19.00	7219.00	24.0	173256.0	MILL 2"	15.6	0	20052.8	0	401.1	28876.0	4211.1	1965.2	2245.9	0	0
STA EQU: STA 413+19.00(BK) = STA 2+46.00(AH)																		
RT	2+46.00		21+50.00	1904.00	24.0	45696.0	MILL 2"	0	0	5288.9	0	105.8	7616.0	1110.7	518.3	592.4	0	0
RT	21+50.00		22+20.00	70.00	24.0	1680.0	MILL 2" TO 3.75" - RAMP	0	0	0	194.4	3.9	280.0	40.8	19.1	21.8	0	0
RT	22+20.00		25+00.00	280.00	24.0	6720.0	MILL 3.75"	0	0	0	777.8	15.6	1120.0	163.3	76.2	87.1	0	0
RT	25+00.00		25+70.00	70.00	24.0	1680.0	MILL 3.75" TO 2" - RAMP	0	0	0	194.4	3.9	280.0	40.8	19.1	21.8	0	0
RT	25+70.00		35+30.00	960.00	24.0	23040.0	MILL 2"	0	0	2666.7	0	53.3	3840.0	560.0	261.3	298.7	0	0
RT	35+30.00		40+90.00	560.00	24.0	13440.0	MILL 2"	0	0	1555.6	0	31.1	2240.0	326.7	152.4	174.2	0	0
RT	40+30.00		41+60.00	130.00	24.0	3120.0	MILL 2" TO 3.75" - RAMP	0	0	0	361.1	7.2	520.0	75.8	35.4	40.4	0	0
RT	41+60.00		46+50.00	490.00	24.0	11760.0	MILL 3.75"	0	0	0	1361.1	27.2	1960.0	285.8	133.4	152.4	0	0
RT	46+50.00		47+20.00	70.00	24.0	1680.0	MILL 3.75" TO 2" - RAMP	0	0	0	194.4	3.9	280.0	40.8	19.1	21.8	0	0
RT	47+20.00		94+00.00	4680.00	24.0	112320.0	MILL 2"	0	0	13000.0	0	260.0	18720.0	2730.0	1274.0	1456.0	0	0
RT	94+00.00		94+70.00	70.00	24.0	1680.0	MILL 2" TO 3.75" - RAMP	0	0	0	194.4	3.9	280.0	40.8	19.1	21.8	0	0
RT	94+70.00		100+30.00	560.00	24.0	13440.0	MILL 3.75"	15.6	0	0	1524.4	31.1	2240.0	320.1	149.4	170.7	0	0
RT	100+30.00		100+70.00	40.00	24.0	960.0	MILL 2" - BUTT JOINT	17.8	108.9	0	0	2.2	80.0	12.2	0.0	12.2	0	0
US 24 EBL - LT TURN LANE AT GROSENBACH RD																		
RT	342+63.00		344+93.00	230.00	VAR	1380.0	MILL 2"	0	0	153.3	0	12.8	220.8	32.2	15.0	17.2	0	0
RT	344+93.00		346+88.00	195.00	12.0	2340.0	MILL 2"	0	0	260.0	0	10.8	374.4	54.6	25.5	29.1	0	0
US 24 EBL - LT TURN LANE AT HOLLANDS GROVE RD																		
RT	368+50.00		370+80.00	230.00	VAR	1380.0	MILL 2"	0	0	153.3	0	12.8	220.8	32.2	15.0	17.2	0	0
RT	370+80.00		372+75.00	195.00	12.0	2340.0	MILL 2"	0	0	260.0	0	10.8	374.4	54.6	25.5	29.1	0	0
US 24 EBL - RT TURN LANE AT GRANGE RD																		
RT	394+21.10		397+21.10	300.00	VAR	1800.0	MILL 2"	0	0	216.7	0	16.7	300.0	45.5	21.2	24.3	0	0
RT	397+21.10		400+21.10	300.00	12.0	3600.0	MILL 2"	0	0	416.7	0	16.7	600.0	87.5	40.8	46.7	0	0
US 24 EBL - LT TURN LANE AT GRANGE RD																		
RT	396+41.50		398+71.50	230.00	VAR	1380.0	MILL 2"	0	0	153.3	0	12.8	220.8	32.2	15.0	17.2	0	0
RT	398+71.50		400+66.50	195.00	12.0	2340.0	MILL 2"	0	0	260.0	0	10.8	374.4	54.6	25.5	29.1	0	0
US 24 EBL - RAMP C - EXIT RAMP TO BL-24																		
RT	0+00.00		4+00.00	400.00	VAR	4666.0	MILL 2"	0	0	540.7	0	22.2	778.6	113.5	53.0	60.6	0	0
RT	4+00.00		6+60.00	260.00	16.0	4160.0	MILL 2"	0	0	491.1	0	0	707.2	103.1	48.1	55.0	0	0
RT	6+60.00		6+90.00	30.00	16.0	480.0	MILL 2"	10.4	0	56.7	0	0	81.6	11.9	5.6	6.3	0	0
RT	6+90.00		7+30.00	40.00	16.0	640.0	MILL 0.25" TO 2" - RAMP	11.9	75.6	0	0	0	108.8	15.9	7.4	8.5	0	0
										1088.4								
US 24 EBL - RT TURN LANE AT SPRING CREEK RD																		
RT	36+30.00		39+30.00	300.00	VAR	1800.0	MILL 2"	0	0	216.7	0	16.7	312.0	45.5	21.2	24.3	0	0
RT	39+30.00		40+30.00	100.00	12.0	1200.0	MILL 2"	0	0	138.9	0	5.6	200.0	29.2	13.6	15.6	0	0
RT	40+30.00		41+00.00	70.00	12.0	840.0	MILL 2" TO 3.75" - RAMP	0	0	0	97.2	3.9	140.0	20.4	9.5	10.9	0	0
RT	41+00.00		42+35.42	135.42	12.0	1625.0	MILL 3.75"	0	0	0	188.1	7.5	270.8	39.5	18.4	21.1	0	0
US 24 EBL - LT TURN LANE AT SPRING CREEK RD																		
RT	37+51.70		39+62.60	210.90	VAR	1687.2	MILL 2"; WIDTH: 1.00' TO 15.00'	0	0	199.2	0	11.7	286.8	41.8	19.5	22.3	0	0
RT	39+62.60		40+90.00	127.40	VAR	2423.7	MILL 2"; WIDTH: 15.00' TO 19.25'	0	0	276.4	0	7.1	398.0	58.0	27.1	31.0	0	0
RT	40+90.00		41+60.00	70.00	VAR	1768.2	MILL 2" TO 3.75" - RAMP	0	0	0	200.4	3.9	288.5	42.1	19.6	22.4	0	0
RT	41+60.00		41+68.40	8.4	VAR	1941.5	MILL 3.75"; WIDTH: 23.67' TO 28.00'	0	0	0	216.2	0.5	311.3	45.4	21.2	24.2	0	0
RT	41+68.40		43+36.40	168	14.0	2352.0	MILL 3.75"	0	0	0	261.3	0.0	376.3	54.9	25.6	29.3	0	0
RT	43+36.40		43+71.04	34.64	VAR	697.5	MILL 3.75"	0	0	0	77.5	1.9	111.6	16.3	7.6	8.7	0	0
SUB-TOTAL (URBAN AREA - EAST PEORIA; STA 430+60 TO STA 35+30) =								55.6	186.7	30970.1	1166.7	712.1	46453.8	6777.0	3156.8	3620.2	0.0	0.0
SUB-TOTAL (URBAN AREA - WASHINGTON; STA 35+30 TO STA 100+70) =								33.3	108.9	16475.1	4676.2	425.4	29015.4	4225.4	1966.2	2259.2	0.0	0.0

MODEL: Sheet 2
FILE NAME: c:\users\swilliams1\appdata\local\bentley\projectwise\workingdir\bfwme-pw.bentley.com_bfwme-pw-01\tony.williams\d0215423\D468F92-sht-Schedules.dgn

BFW ENGINEERING & CONSULTING

USER NAME = sskinner	DESIGNED -	REVISED -
	DRAWN -	REVISED -
PLOT SCALE = $SCALE$	CHECKED -	REVISED -
PLOT DATE = 8/28/2025	DATE -	REVISED -

STATE OF ILLINOIS
DEPARTMENT OF TRANSPORTATION

SCHEDULE OF QUANTITIES
US 24

SCALE: N.T.S. | SHEET 2 OF 13 SHEETS | STA. | TO STA.

F.A.P. RTE.	SECTION	COUNTY	TOTAL SHEETS	SHEET NO.
317	17(RS-6,TS-2);18(RS,TS)-2	TAZEWELL	85	29

CONTRACT NO. 68F92

ILLINOIS | FED. AID PROJECT

PAVING SCHEDULE - PAVEMENT AREAS

LOCATION				LENGTH	PAVEMENT WIDTH	AREA	COMMENTS	TEMP RAMP	HMA SURF REM, BUTT JOINT	HMA SURF REM, 2.0"	HMA SURF REM, 3.75"	HOT-MIX ASPHALT SURFACE REMOVAL (SPECIAL) - FOR CL JOINT TRIMMING - SEE SPECIAL PROV	POLY BIT MATLS (TACK COAT) - BETWEEN ALL LIFTS (0.08 LB/SF ON MILLED SURF.; 0.08 LB/SF BETWEEN LIFTS)	MATL TRANS. DEVICE	POLY HMA BIND CSE, IL-9.5, N50, 1.75"	POLY HMA SURF CSE, IL-9.5, MIX D, N50, 2"	AGG SURFACE COURSE, TYPE B	INCIDENTAL HOT MIX ASPHALT SURFACING
PAY CODE NO.								40600990	40600982	44000157	44000164	X4400196	40600295	40600405	40603205	40604160	40200800	40800050
LT/RT	STATION	TO	STATION	(FOOT)	(FOOT)	(SQ FT)		(SQ YD)	(SQ YD)	(SQ YD)	(SQ YD)	(SQ YD)	(POUND)	(TON)	(TON)	(TON)	(TON)	(TON)
TAZEWELL COUNTY CONTINUED																		
US 24 WBL - LT ENTRANCE RAMP FROM SPRING CREEK RD																		
RT	43+71.04		46+49.26	278.22	VAR	4963.0	MILL 3.75"	0	0	0	551.4	9.2	794.1	115.8	54.0	61.8	0	0
RT	46+49.26		46+50.00	0.74	VAR	20.7	MILL 3.75"; WIDTH: 28.00' TO 26.43'	0	0	0	2.3	0.0	3.4	0.5	0.2	0.3	0	0
RT	46+50.00		47+20.00	70.00	VAR	1883.0	MILL 3.75" TO 2" - RAMP	0	0	0	213.1	3.9	306.9	44.8	20.9	23.9	0	0
RT	47+20.00		50+70.12	350.12	VAR	7145.9	MILL 2"; WIDTH: 24.27' TO 15.00'	0	0	813.4	0	19.5	1171.4	170.8	79.7	91.1	0	0
RT	50+70.12		53+84.10	313.98	VAR	2511.8	MILL 2"; WIDTH: 15.00' TO 1.00'	0	0	296.5	0	17.4	427.0	62.3	29.1	33.2	0	0
US 24 EBL - RT TURN LANE AT CUMMINGS LANE																		
RT	90+31.50		93+31.50	300.00	VAR	1800.0	MILL 2"	0	0	216.7	0	16.7	312.0	45.5	21.2	24.3	0	0
RT	93+31.50		94+00.00	68.50	12.0	822.0	MILL 2"	0	0	95.1	0	3.8	137.0	20.0	9.3	10.7	0	0
RT	94+00.00		94+70.00	70.00	12.0	840.0	MILL 2" TO 3.75" - RAMP	0	0	0	97.2	3.9	140.0	20.4	9.5	10.9	0	0
RT	94+70.00		96+34.50	164.50	12.0	1974.0	MILL 3.75"	0	0	0	228.5	9.1	329.0	48.0	22.4	25.6	0	0
US 24 EBL - LT TURN LANE AT CUMMINGS LANE																		
RT	90+87.67		93+32.71	245.04	VAR	1715.3	MILL 2"; WIDTH: 1.00' TO 14.00'	0	0	204.2	0	13.6	294.0	42.9	20.0	22.9	0	0
RT	93+32.71		94+00.00	67.29	VAR	1127.1	MILL 2"; WIDTH: 14.00' TO 19.50'	0	0	129.0	0	3.7	185.7	27.1	12.6	14.4	0	0
RT	94+00.00		94+70.00	70.00	VAR	1534.8	MILL 2" TO 3.75" - RAMP; 19.50' TO 2	0	0	0	174.4	3.9	251.2	36.6	17.1	19.5	0	0
RT	94+70.00		97+53.00	283.00	VAR	5611.0	MILL 3.75"	0	0	0	632.5	9.1	910.8	132.8	62.0	70.8	0	0
US 24 WBL																		
LT	340+60.00		341+00.00	40.00	24.0	960.0	MILL 2" TO 0.25" - RAMP	17.8	111.1	0	0	2.2	80.0	12.4	0.0	12.4	0	0
LT	341+00.00		413+19.00	7219.00	24.0	173256.0	MILL 2"	15.6	0	20052.8	0	401.1	28876.0	4211.1	1965.2	2245.9	0	0
STA EQU: STA 413+19.00(BK) = STA 2+46.00(AH)																		
LT	2+46.00		21+50.00	1904.00	24.0	45696.0	MILL 2"	0	0	5288.9	0	105.8	7616.0	1110.7	518.3	592.4	0	0
LT	21+50.00		22+20.00	70.00	24.0	1680.0	MILL 2" TO 3.75" - RAMP	0	0	0	194.4	3.9	280.0	40.8	19.1	21.8	0	0
LT	22+20.00		25+00.00	280.00	24.0	6720.0	MILL 3.75"	0	0	0	777.8	15.6	1120.0	163.3	76.2	87.1	0	0
LT	25+00.00		25+70.00	70.00	24.0	1680.0	MILL 3.75" TO 2" - RAMP	0	0	0	194.4	3.9	280.0	40.8	19.1	21.8	0	0
LT	25+70.00		35+30.00	960.00	24.0	23040.0	MILL 2"	0	0	2666.7	0	53.3	3840.0	560.0	261.3	298.7	0	0
LT	35+30.00		40+90.00	560.00	24.0	13440.0	MILL 2"	0	0	1555.6	0	31.1	2240.0	326.7	152.4	174.2	0	0
LT	40+90.00		41+60.00	70.00	24.0	1680.0	MILL 2" TO 3.75" - RAMP	0	0	0	194.4	3.9	280.0	40.8	19.1	21.8	0	0
LT	41+60.00		46+50.00	490.00	24.0	11760.0	MILL 3.75"	0	0	0	1361.1	27.2	1960.0	285.8	133.4	152.4	0	0
LT	46+50.00		47+20.00	70.00	24.0	1680.0	MILL 3.75" TO 2" - RAMP	0	0	0	194.4	3.9	280.0	40.8	19.1	21.8	0	0
LT	47+20.00		94+00.00	4680.00	24.0	112320.0	MILL 2"	0	0	13000.0	0	260.0	18720.0	2730.0	1274.0	1456.0	0	0
LT	94+00.00		94+70.00	70.00	24.0	1680.0	MILL 2" TO 3.75" - RAMP	0	0	0	194.4	3.9	280.0	40.8	19.1	21.8	0	0
LT	94+70.00		95+90.00	120.00	24.0	2880.0	MILL 3.75"	0	0	0	333.3	6.7	480.0	70.0	32.7	37.3	0	0
LT	95+90.00		100+30.00	440.00	24.0	10560.0	MILL 3.75"	15.6	0	0	1222.2	24.4	1760.0	256.7	119.8	136.9	0	0
LT	100+30.00		100+70.00	40.00	24.0	960.0	MILL 2" - BUTT JOINT	17.8	111.1	0	0	2.2	80.0	12.4	0.0	12.4	0	0
US 24 WBL - RT TURN LANE AT GROSENBACH RD																		
LT	348+70.79		350+73.46	202.67	12.0	2432.0	MILL 2"	0	0	292.7	0	11.3	421.6	61.5	28.7	32.8	0	0
LT	350+73.46		353+03.92	230.46	VAR	1382.8	MILL 2"	0	0	166.4	0	12.8	239.7	35.0	16.3	18.6	0	0
US 24 WBL - RT TURN LANE AT HOLLANDS GROVE RD																		
LT	374+66.60		376+61.60	195.00	12.0	2340.0	MILL 2"	0	0	281.7	0	10.8	405.6	59.2	27.6	31.5	0	0
LT	376+61.60		378+91.60	230.00	VAR	1380.0	MILL 2"	0	0	166.1	0	12.8	239.2	34.9	16.3	18.6	0	0
US 24 WBL - LT TURN LANE AT GRANGE RD																		
LT	402+00.90		404+17.50	216.60	12.0	2599.2	MILL 2"	0	0	288.8	0	12.0	415.9	60.6	28.3	32.3	0	0
LT	404+17.50		407+17.50	300.00	VAR	1800.0	MILL 2"	0	0	200.0	0	16.7	288.0	42.0	19.6	22.4	0	0
US 24 WBL - RT TURN LANE AT GRANGE RD																		
LT	402+62.90		404+57.90	195.00	12.0	2340.0	MILL 2"	0	0	281.7	0	10.8	405.6	59.2	27.6	31.5	0	0
LT	404+57.90		406+87.90	230.00	VAR	1380.0	MILL 2"	0	0	166.1	0	12.8	239.2	34.9	16.3	18.6	0	0
US 24 WBL - RAMP B - ENTRANCE RAMP FROM BL-24																		
LT	23+20.00		23+60.00	40.00	16.0	640.0	MILL 2" TO 0.25" - RAMP	11.9	75.6	0	0	0	54.4	8.5	0	8.5	0	0
LT	23+60.00		26+87.78	327.78	16.0	5244.5	MILL 2"	10.4	0	619.1	0	0	891.6	130.0	60.7	69.3	0	0
LT	26+87.78		36+36.99	949.21	VAR	9966.7	MILL 2"	0	0	1160.1	0	52.7	1670.6	243.6	113.7	129.9	0	0
SUB-TOTAL (URBAN AREA - EAST PEORIA; STA 430+60 TO STA 35+30) =								55.6	186.7	31631.2	1166.7	738.4	47363.3	6908.5	3214.2	3694.3	0.0	0.0
SUB-TOTAL (URBAN AREA - WASHINGTON; STA 35+30 TO STA 100+70) =								33.3	111.1	16310.5	5399.5	477.1	31342.4	4571.5	2127.6	2444.0	0.0	0.0

MODEL: Sheet 3
FILE NAME: c:\users\twilliams1\appdata\local\bentley\projectwise\workingdir\bfwme-pw.bentley.com_bfwme-pw-011\tony.williams\d0215423\D468F92-sht-Schedules.dgn

BFW ENGINEERING & CONSULTING

USER NAME = sskinner	DESIGNED -	REVISED -
	DRAWN -	REVISED -
PLOT SCALE = $SCALE$	CHECKED -	REVISED -
PLOT DATE = 8/28/2025	DATE -	REVISED -

STATE OF ILLINOIS
DEPARTMENT OF TRANSPORTATION

SCHEDULE OF QUANTITIES
US 24

SCALE: N.T.S. | SHEET 3 OF 13 SHEETS | STA. | TO STA.

F.A.P. RTE.	SECTION	COUNTY	TOTAL SHEETS	SHEET NO.
317	17(RS-6,TS-2);18(RS,TS)-2	TAZEWELL	85	30
		CONTRACT NO. 68F92		
		ILLINOIS	FED. AID PROJECT	

PAVING SCHEDULE - PAVEMENT AREAS

LOCATION				LENGTH	PAVEMENT WIDTH	AREA	COMMENTS	TEMP RAMP	HMA SURF REM, BUTT JOINT	HMA SURF REM, 2.0"	HMA SURF REM, 3.75"	HOT-MIX ASPHALT SURFACE REMOVAL (SPECIAL) - FOR CL JOINT TRIMMING - SEE SPECIAL PROV	POLY BIT MATLS (TACK COAT) - BETWEEN ALL LIFTS (0.08 LB/SF ON MILLED SURF.; 0.08 LB/SF BETWEEN LIFTS)	MATL TRANS. DEVICE	POLY HMA BIND CSE, IL-9.5, N50, 1.75"	POLY HMA SURF CSE, IL-9.5, MIX D, N50, 2"	AGG SURFACE COURSE, TYPE B	INCIDENTAL HOT-MIX ASPHALT SURFACING
PAY CODE NO.								40600990	40600982	44000157	44000164	X4400196	40600295	40600405	40603205	40604160	40200800	40800050
LT/RT	STATION	TO	STATION	(FOOT)	(FOOT)	(SQ FT)		(SQ YD)	(SQ YD)	(SQ YD)	(SQ YD)	(SQ YD)	(POUND)	(TON)	(TON)	(TON)	(TON)	(TON)
TAZEWELL COUNTY CONTINUED																		
US 24 WBL - LT TURN LANE TO RAMP D TO SB BL-24																		
LT	17+30.00		20+30.00	300.00	12.0	3600.0	MILL 2"	0	0	400.0	0	16.7	576.0	84.0	39.2	44.8	0	0
LT	20+30.00		21+50.00	120.00	VAR	1152.0	MILL 2"	0	0	128.0	0	6.7	184.3	26.9	12.5	14.3	0	0
LT	21+50.00		22+20.00	70.00	VAR	406.0	MILL 2" TO 3.75" - RAMP	0	0	0	45.1	3.9	0.0	0.0	0.0	0.0	0	0
LT	22+20.00		23+30.00	110.00	VAR	242.0	MILL 3.75"	0	0	0	26.9	6.1	0.0	0.0	0.0	0.0	0	0
US 24 WBL - RT TURN LANE AT SPRING CREEK RD																		
LT	45+12.10		47+00.00	187.90	12.0	2254.8	MILL 3.75"	0	0	0	271.4	10.4	390.8	57.0	26.6	30.4	0	0
LT	47+00.00		47+70.00	70.00	12.0	840.0	MILL 3.75" TO 2" - RAMP	0	0	0	101.1	3.9	145.6	21.2	9.9	11.3	0	0
LT	47+70.00		48+12.10	42.10	12.0	505.2	MILL 2"	0	0	60.8	0	2.3	87.6	12.8	6.0	6.8	0	0
LT	48+12.10		52+00.00	387.90	VAR	2327.4	MILL 2"	0	0	301.7	0	21.6	434.4	63.4	29.6	33.8	0	0
US 24 WBL - LT TURN LANE AT CUMMINGS LANE																		
RT	97+53.00		100+30.00	277.00	VAR	5270.0	MILL 3.75"	9.1	0	0	585.6	10.2	843.2	123.0	57.4	65.6	0	0
LT	100+30.00		100+70.00	40.00	VAR	837.0	MILL 2" - BUTT JOINT	10.4	93.0	0	0	2.2	66.96	0.0	0.0	0.0	0	0
US 24 FIELD ENTRANCE																		
RT	367+90.00			38.00	24.0	1362		0	0	0	0	0	0	0	0	0	16.9	0
RT	373+50.00			38.00	24.0	1362		0	0	0	0	0	0	0	0	0	16.9	0
GROSENBACH ROAD - MEDIAN CROSS OVER																		
	9+80.00		10+20.00	40.00	VAR	3960	MILL 2"; LJS AT ML EOP WB & EB	103.7	0	440.0	0	16.7	633.6	92.4	43.1	49.3	0	0
GROSENBACH ROAD - NORTH																		
	10+44.00		11+37.00	93.00	VAR	6963.0	MILL 2"	85.0	0	773.7	0	8.3	1114.1	162.5	75.8	86.7	0	0
	11+37.00		11+77.00	40.00	VAR	960.0	MILL 0.25" TO 2" - RAMP	17.8	106.7	0	0	0	76.8	11.9	0.0	11.9	0	0
HOLLANDS GROVE ROAD - MEDIAN CROSS OVER																		
	9+77.00		10+23.00	46.00	VAR	4495	MILL 2"	103.7	0	499.4	0	16.7	719.2	104.9	48.9	55.9	0	0
HOLLANDS GROVE ROAD - NORTH																		
	10+47.00		10+82.00	35.00	VAR	4844.0	MILL 2"	114.2	0	538.2	0	14.1	775.0	113.0	52.7	60.3	0	0
	10+82.00		11+22.00	40.00	VAR	1812.0	MILL 0.25" TO 2" - RAMP	23.7	201.3	0	0	0	145.0	22.5	0.0	22.5	0	0
GRANGE ROAD - SOUTH																		
	8+00.00		8+40.00	40.00	VAR	984	MILL 2" TO 0.25" - RAMP	17.8	109.3	0	0	0	78.7	12.2	0.0	12.2	0	0
	8+40.00		9+52.96	112.96	VAR	8090.0	MILL 2"	85.6	0	898.9	0	14.2	1294.4	188.8	88.1	100.7	0	0
GRANGE ROAD - MEDIAN CROSS OVER																		
	9+76.98		10+23.02	46.04	VAR	5371.0	MILL 2"	103.7	0	596.8	0	34.8	859.4	125.3	58.5	66.8	0	0
GRANGE ROAD - NORTH																		
	10+47.04		11+30.00	82.96	VAR	7128.0	MILL 2"	88.9	0	792.0	0	14.2	1140.5	166.3	77.6	88.7	0	0
	11+30.00		11+70.00	40.00	VAR	1043.0	MILL 0.25" TO 2" - RAMP	17.8	115.9	0	0	0	83.4	13.0	0.0	13.0	0	0
US 24 WB LT TURN LANE TO RAMP D TO SB BL-24 - MEDIAN CROSS OVER																		
	AT 16+70			46.00	VAR	1600.0	MILL 2"	33.3	0	177.8	0	3.6	256.0	37.3	17.4	19.9	0	0
RAMP D - SOUTH OF US 24 EBL																		
	0+02.00		0+50.00	48.00	VAR	1020.0	MILL 2"	42.9	0	113.3	0	1.1	163.2	23.8	11.1	12.7	0	0
	0+50.00		0+90.00	40.00	VAR	715.0	MILL 0.25" TO 2" - RAMP	12.6	79.4	0	0	0	57.2	8.9	0.0	8.9	0	0
RAMP A - SOUTH OF US 24 EBL																		
	16+50.00		16+90.00	40.00	VAR	1574.0	MILL 2"	12.6	174.9	0	0	0	125.9	19.6	0.0	19.6	0	0
	16+90.00		18+15.75	125.75	VAR	640.0	MILL 2" TO 0.25" - RAMP	42.9	0	71.1	0	3.1	102.4	14.9	7.0	8.0	0	0
SPRING CREEK ROAD - NORTH																		
	7+87.00		8+27.00	40.00	VAR	960.0	MILL 2" - BUTT JOINT	17.8	106.7	0	0	0	76.8	11.9	0.0	11.9	0	0
	8+27.00		9+51.52	124.52	VAR	9425.0	MILL 3.75"	122.0	0	0	1047.2	8.8	1508.0	219.9	102.6	117.3	0	0
SUB-TOTAL (URBAN AREA - EAST PEORIA; STA 430+60 TO STA 35+30) =								906.1	787.6	5429.2	72.0	160.0	8385.1	1228.3	532.1	696.3	33.9	0.0
SUB-TOTAL (URBAN AREA - WASHINGTON; STA 35+30 TO STA 100+70) =								159.3	199.7	362.5	2005.3	59.4	3553.4	509.2	232.0	277.1	0.0	0.0

MODEL: Sheet 4
FILE NAME: c:\users\twilliams1\appdata\local\bentley\projectwise\workingdir\bfwme-pw.bentley.com_bfwme-pw-011\tony.williams\d0215423\D468F92-sht-Schedules.dgn

BFW ENGINEERING & CONSULTING

USER NAME = sskinner	DESIGNED -	REVISED -
	DRAWN -	REVISED -
PLOT SCALE = $SCALE$	CHECKED -	REVISED -
PLOT DATE = 8/28/2025	DATE -	REVISED -

STATE OF ILLINOIS
DEPARTMENT OF TRANSPORTATION

SCHEDULE OF QUANTITIES
US 24

SCALE: N.T.S. | SHEET 4 OF 13 SHEETS | STA. | TO STA.

F.A.P. RTE.	SECTION	COUNTY	TOTAL SHEETS	SHEET NO.
317	17(RS-6,TS-2);18(RS,TS)-2	TAZEWELL	85	31
		CONTRACT NO. 68F92		
		ILLINOIS	FED. AID PROJECT	

PAVING SCHEDULE - PAVEMENT AREAS

LOCATION				LENGTH	PAVEMENT WIDTH	AREA	COMMENTS	TEMP RAMP	HMA SURF REM, BUTT JOINT	HMA SURF REM, 2.0"	HMA SURF REM, 3.75"	HOT-MIX ASPHALT SURFACE REMOVAL (SPECIAL) - FOR CL JOINT TRIMMING - SEE SPECIAL PROV	POLY BIT MATLS (TACK COAT) - BETWEEN ALL LIFTS (0.08 LB/SF ON MILLED SURF.; 0.08 LB/SF BETWEEN LIFTS)	MATL TRANS. DEVICE	POLY HMA BIND CSE, IL-9.5, N50, 1.75"	POLY HMA SURF CSE, IL-9.5, MIX D, N50, 2"	AGG SURFACE COURSE, TYPE B	INCIDENTAL HOT-MIX ASPHALT SURFACING
PAY CODE NO.								40600990	40600982	44000157	44000164	X4400196	40600295	40600405	40603205	40604160	40200800	40800050
LT/RT	STATION	TO	STATION	(FOOT)	(FOOT)	(SQ FT)		(SQ YD)	(SQ YD)	(SQ YD)	(SQ YD)	(SQ YD)	(POUND)	(TON)	(TON)	(TON)	(TON)	(TON)
TAZEWELL COUNTY CONTINUED																		
SPRING CREEK ROAD - SOUTH																		
	10+48.47		11+97.00	148.53	VAR	9110.0	MILL 3.75"	122.0	0	0	1012.2	11.0	1457.6	212.6	99.2	113.4		0
	11+97.00		12+37.00	40.00	VAR	960.0	MILL 2" - BUTT JOINT	17.8	106.7	0	0	0	76.8	11.9	0.0	11.9		0
US 24 MEDIAN CROSS OVER																		
	58+40.00					1700	NO MILLING; 1.75" INCID HMA					0	136.0					21.2
CUMMINGS ROAD SOUTH																		
	208+00.00		208+40.00	40.00	VAR	1457.0	MILL 2" - BUTT JOINT	26.7	161.9	0	0	0	116.6	18.1	0.0	18.1		0
	208+40.00		209+52.48	112.48	VAR	9696.0	MILL 3.75"	93.4	0	0	1077.3	14.8	1551.4	226.2	105.6	120.7		0
CUMMINGS ROAD - NORTH																		
	210+47.00			0.00	0.0	0.0	BUTT JT AT ML EOP WB	106.5	0	0	0	0	0	0	0	0		
SUB-TOTAL (URBAN AREA - EAST PEORIA; STA 430+60 TO STA 35+30) =								0.0	0.0	0.0	0.0	0.0	0.0	0.0	0.0	0.0	0.0	0.0
SUB-TOTAL (URBAN AREA - WASHINGTON; STA 35+30 TO STA 100+70) =								366.4	268.6	0.0	2089.6	25.8	3338.3	468.9	204.8	264.1	0.0	21.2
TOTAL (URBAN AREA - EAST PEORIA; STA 430+60 TO STA 35+30) =								1017.2	1160.9	68030.5	2405.3	1610.6	102202.2	14913.8	6903.1	8010.8	33.9	0.0
TOTAL (URBAN AREA - WASHINGTON; STA 35+30 TO STA 100+70) =								592.3	688.2	33148.1	14170.6	987.7	67249.5	9775.0	4530.6	5244.5	0.0	21.2
GRAND TOTAL =								1,609.5	1,849.1	101,178.6	16,575.9	2,598.2	169,451.7	24,688.9	11,433.6	13,255.2	33.9	21.2

MODEL: Sheet 5
FILE NAME: c:\users\twilliams1\appdata\local\bentley\projectwise\workingdir\bfwme-pw.bentley.com_bfwme-pw-01\tony.williams\d0215423\D468F92-sht-Schedules.dgn

BFW ENGINEERING & CONSULTING

USER NAME = sskinner	DESIGNED -	REVISED -
	DRAWN -	REVISED -
PLOT SCALE = $SCALE$	CHECKED -	REVISED -
PLOT DATE = 8/28/2025	DATE -	REVISED -

STATE OF ILLINOIS
DEPARTMENT OF TRANSPORTATION

SCHEDULE OF QUANTITIES
US 24

SCALE: N.T.S. | SHEET 5 OF 13 SHEETS | STA. | TO STA.

F.A.P. RTE.	SECTION	COUNTY	TOTAL SHEETS	SHEET NO.
317	17(RS-6,TS-2);18(RS,TS)-2	TAZEWELL	85	32
		CONTRACT NO. 68F92		
		ILLINOIS FED. AID PROJECT		

PAVING SCHEDULE - SHOULDER AREAS

LOCATION				LENGTH	OUTSIDE SHOULDER WIDTH/AVG WIDTH	MEDIAN / INSIDE SHOULDER WIDTH	AREA	COMMENTS	HMA SURF REM, BUTT JOINT	HMA SURF REM, 2.0"	HMA SURF REM, 3.75"	HOT-MIX ASPHALT SURFACE REMOVAL (SPECIAL) - FOR CL JOINT TRIMMING - SEE SPECIAL PROV	PAVED SHOULDER REMOVAL	COMB CONCRETE CURB AND GUTTER, TYPE B-6.24	INLET BOXES TO BE ADJUSTED (SPECIAL)	GUARDRAIL AGGREGATE EROSION CONTROL	POLY BIT MATLS (TACK COAT) - BETWEEN ALL LIFTS (0.08 LB/SF ON MILLED SURF.; 0.08 LB/SF BETWEEN LIFTS)	MATL TRANS. DEVICE	HMA SHLD, 1.75" (BOTTOM LIFT - ML OUT & MED SHLD)	HMA SHLD, 2.00" (TOP LIFT - ML OUT & MED SHLD)	AGG WEDGE SHLD, TYPE B, VAR. DEPTH (ML OUT & MED SHLD)	SHLD RUMBLE STRIPS, 16 INCH (ML OUT & MED SHLDS)	RECOVERABLE DELINEATORS - GROUND MOUNTED IN FORESLOPE
PAY CODE NO.									40600982	44000157	44000164	X4400196	44004250	60605000	X6020050	Z0001002	40600295	40600405	48203100	48203100	48102100	64200116	X2600002
LT/RT	STATION	TO	STATION	(FOOT)	(FOOT)	(FOOT)	(SQ FT)		(SQ YD)	(SQ YD)	(SQ YD)	(SQ YD)	(SQ YD)	(FOOT)	(EACH)	(TON)	(POUND)	(TON)	(TON)	(TON)	(TON)	(FOOT)	(EACH)
TAZEWELL COUNTY																							
US 24 EBL - OUTSIDE SHOULDER																							
RT	340+60.00		341+00.00	40.00	10		400.0	MILL 2" TO 0.25" - RAMP	44.4	0	0	2.2	0	0	0	0	32	5.0	0.0	5.0	2.4	40.0	13.4
RT	341+00.00		394+21.10	5321.10	10		53211.0	MILL 2"	0	5912.3	0	295.6	0	0	0	0	8514	1241.6	579.4	662.2	319.8	5321.1	
RT	394+21.10		395+71.10	150.00	7		1050.0	MILL 2"	0	116.7	0	8.3	0	0	0	0	168	24.5	11.4	13.1	9.0	0	6.0
RT	395+71.10		397+21.10	150.00	4		600.0	VAR WIDTH; MILL 2"	0	66.7	0	0	0	0	0	0	96	14.0	6.5	7.5	9.0	0	
RT	397+21.10		400+25.07	303.97	4		1215.9	MILL 2"	0	135.1	0	0	0	0	0	0	195	28.4	13.2	15.1	18.3	0	
GRANGE RD - SOUTH																							
RT	402+76.30		412+52.07	975.77	10		9757.7	MILL 2"	0	1084.2	0	54.2	0	0	0	0	1561	227.7	106.3	121.4	58.7	975.8	2.4
BL-24 RAMP C																							
STA EQU: STA 413+19.00(BK) = STA 2+46.00(AH)																							
RT	5+82.35		8+42.35	260.00	13.28		3452.8	VAR WIDTH GORE; MILL 2"	0	383.6	0	14.4	0	0	0	0	552	80.6	37.6	43.0	0	0	0.0
RT	8+42.35		16+48.00	805.65	10		8056.5	MILL 2"	0	895.2	0	44.8	0	0	0	0	1289	188.0	87.7	100.3	48.4	805.7	
BL-24 RAMP D - SOUTH																							
RT	16+70.00		21+50.00	480.00	10		4800.0	MILL 2"	0	533.3	0	26.7	0	0	0	0	768	112.0	52.3	59.7	28.9	480.0	
RT	21+50.00		22+20.00	70.00	10		700.0	MILL 2" TO 3.75" - RAMP	0	0	77.8	3.9	0	0	0	0	112	16.3	7.6	8.7	4.2	70.0	
RT	22+20.00		25+00.00	280.00	10		2800.0	MILL 3.75"	0	0	311.1	15.6	0	0	0	0	448	65.3	30.5	34.8	16.8	280.0	6.5
RT	25+00.00		25+70.00	70.00	10		700.0	MILL 3.75" TO 2" - RAMP	0	0	77.8	3.9	0	0	0	0	112	16.3	7.6	8.7	4.2	70.0	
RT	25+70.00		26+88.68	118.68	10		1186.8	MILL 2"	0	131.9	0	6.6	0	0	0	0	190	27.7	12.9	14.8	7.1	118.7	
BL-24 RAMP A - SOUTH																							
RT	27+63.15		35+30.00	766.85	10		7668.5	MILL 2"	0	852.1	0	42.6	0	0	0	0	1227	178.9	83.5	95.4	46.1	766.9	
RT	35+30.00		36+30.00	100.00	10		1000.0	MILL 2"	0	111.1	0	5.6	0	0	0	0	160	23.3	10.9	12.4	6.0	100.0	
RT	36+30.00		37+80.00	150.00	7		1050.0	VAR WIDTH; MILL 2"	0	116.7	0	0	0	0	0	0	168	24.5	11.4	13.1	9.0	0	
RT	37+80.00		39+30.00	150.00	4		600.0	MILL 2"	0	66.7	0	0	0	0	0	0	96	14.0	6.5	7.5	9.0	0	6.1
RT	39+30.00		40+90.00	160.00	4		640.0	MILL 2"	0	71.1	0	0	0	0	0	0	102	14.9	7.0	8.0	9.6	0	
RT	40+90.00		41+60.00	70.00	4		280.0	MILL 2" TO 3.75" - RAMP	0	0	31.1	0	0	0	0	0	45	6.5	3.0	3.5	4.2	0	
RT	41+60.00		42+35.42	75.42	4		301.7	MILL 3.75"	0	0	33.5	0	0	0	0	0	48	7.0	3.3	3.8	4.5	0	
SPRING CREEK RD SOUTH																							
RT	44+32.65		46+50.00	217.35	10		2173.5	MILL 3.75"	0	0	241.5	12.1	0	0	0	0	348	50.7	23.7	27.0	13.1	217.4	
RT	46+50.00		47+20.00	70.00	10		700.0	MILL 3.75" TO 2" - RAMP	0	0	77.8	3.9	0	0	0	0	112	16.3	7.6	8.7	4.2	70.0	11.5
RT	47+20.00		90+31.50	4311.50	10		43115.0	MILL 2"	0	4790.6	0	239.5	0	0	0	0	6898	1006.0	469.5	536.5	259.2	4311.5	
RT	90+31.50		91+81.50	150.00	7		1050.0	MILL 2"	0	116.7	0	0	0	0	0	0	168	24.5	11.4	13.1	9.0	0	
RT	91+81.50		93+31.50	150.00	4		600.0	MILL 2"	0	66.7	0	0	0	0	0	0	96	14.0	6.5	7.5	9.0	0	
RT	93+31.50		94+00.00	68.50	4		274.0	MILL 2"	0	30.4	0	0	0	0	0	0	44	6.4	3.0	3.4	4.1	0	6.0
RT	94+00.00		94+70.00	70.00	4		280.0	MILL 2" TO 3.75" - RAMP	0	0	31.1	0	0	0	0	0	45	6.5	3.0	3.5	4.2	0	
RT	94+70.00		96+31.50	161.50	4		646.0	MILL 3.75"	0	0	71.8	0	0	0	0	0	103	15.1	7.0	8.0	9.7	0	
CUMMINGS LANE - SOUTH																							
RT	98+98.20		100+30.00	131.80	10		1318.0	MILL 3.75"	0	0	146.4	7.3	0	0	0	0	211	30.6	14.4	16.4	7.9	131.8	0.4
RT	100+30.00		100+70.00	40.00	10		400.0	MILL 2" - BUTT JOINT	44.4	0	0	2.2	0	0	0	0	32	5.0	0.0	5.0	2.4	40.0	
US 24 EBL - MEDIAN SHOULDER																							
RT	340+60.00		341+00.00	40.00		6	240.00	MILL 2" TO 0.25" - RAMP	26.7	0	0	0	0	0	0	0	19	3.0	0.0	3.0	2.4	40.0	0.0
RT	341+00.00		342+63.00	163.00		6	978.0	MILL 2"	0	108.7	0	0	0	0	0	0	156	22.8	10.6	12.2	9.8	163.0	
RT	342+63.00		343+01.33	38.33		5	191.7	VAR WIDTH; MILL 2"	0	21.3	0	0	0	0	0	0	31	4.5	2.1	2.4	2.3	0	
RT	343+01.33		344+93.00	191.67		4	766.7	MILL 2"	0	85.2	0	0	0	0	0	0	123	17.9	8.3	9.5	11.5	0	0.0
RT	344+93.00		346+88.00	195.00		4	780.0	MILL 2"	0	86.7	0	0	0	0	0	0	125	18.2	8.5	9.7	11.7	0	
GROSENBACH RD - MEDIAN CROSS OVER																							
RT	348+38.00		368+50.00	2012.00		6	12072.0	MILL 2"	0	1341.3	0	0	0	0	0	0	1932	281.7	131.5	150.2	120.9	2012.0	0.0
RT	368+50.00		368+88.33	38.33		5	191.7	VAR WIDTH; MILL 2"	0	21.3	0	0	0	0	0	0	31	4.5	2.1	2.4	2.3	0	
RT	368+88.33		370+80.00	191.67		4	766.7	MILL 2"	0	85.2	0	0	0	0	0	0	123	17.9	8.3	9.5	11.5	0	0.0
RT	370+80.00		372+75.00	195.00		4	780.0	MILL 2"	0	86.7	0	0	0	0	0	0	125	18.2	8.5	9.7	11.7	0	
HOLLANDS GROVE RD - MEDIAN CROSS OVER																							
RT	374+40.00		396+41.50	2201.50		6	13209.0	MILL 2"	0	1467.7	0	0	0	0	0	0	2113	308.2	143.8	164.4	132.3	2201.5	0.0
RT	396+41.50		396+79.83	38.33		5	191.7	VAR WIDTH; MILL 2"	0	21.3	0	0	0	0	0	0	31	4.5	2.1	2.4	2.3	0	
RT	396+79.83		398+71.50	191.67		4	766.7	MILL 2"	0	85.2	0	0	0	0	0	0	123	17.9	8.3	9.5	11.5	0	0.0
RT	398+71.50		400+66.50	195.00		4	780.0	MILL 2"	0	86.7	0	0	0	0	0	0	125	18.2	8.5	9.7	11.7	0	
GRANGE RD - MEDIAN CROSS OVER																							
SUB-TOTAL (URBAN AREA - EAST PEORIA; STA 430+60 TO STA 35+30) =									71.1	13608.1	466.7	518.8	0.0	0.0	0.0	0.0	20318.9	2963.7	1379.3	1584.3	915.1	13344.6	28.4
SUB-TOTAL (URBAN AREA - WASHINGTON; STA 35+30 TO STA 100+70) =									44.4	5369.9	633.2	270.6	0.0	0.0	0.0	0.0	8676.5	1265.6	588.3	677.3	365.2	4870.7	24.0

MODEL: Sheet 6
FILE NAME: c:\users\twilliams1\appdata\local\bentley\projectwise\workingdir\bfwme-pw.bentley.com_bfwme-pw-01\tony.williams\d0215423\D468F92-sht-Sched.dgn

BFW ENGINEERING & CONSULTING

USER NAME = sskinner	DESIGNED -	REVISED -
	DRAWN -	REVISED -
PLOT SCALE = $SCALE$	CHECKED -	REVISED -
PLOT DATE = 8/28/2025	DATE -	REVISED -

STATE OF ILLINOIS
DEPARTMENT OF TRANSPORTATION

SCHEDULE OF QUANTITIES
US 24

SCALE: N.T.S. | SHEET 6 OF 13 SHEETS | STA. | TO STA.

F.A.P. RTE.	SECTION	COUNTY	TOTAL SHEETS	SHEET NO.
317	17(RS-6,TS-2);18(RS,TS)-2	TAZEWELL	85	33

CONTRACT NO. 68F92

ILLINOIS | FED. AID PROJECT

PAVING SCHEDULE - SHOULDER AREAS

LOCATION				LENGTH	OUTSIDE SHOULDER WIDTH/AVG WIDTH	MEDIAN / INSIDE SHOULDER WIDTH	AREA	COMMENTS	HMA SURF REM, BUTT JOINT	HMA SURF REM, 2.0"	HMA SURF REM, 3.75"	HOT-MIX ASPHALT SURFACE REMOVAL (SPECIAL) - FOR CL JOINT TRIMMING - SEE SPECIAL PROV	PAVED SHOULDER REMOVAL	COMB CONCRETE CURB AND GUTTER, TYPE B-6.24	INLET BOXES TO BE ADJUSTED (SPECIAL)	GUARDRAIL AGGREGATE EROSION CONTROL	POLY BIT MATLS (TACK COAT) - BETWEEN ALL LIFTS (0.08 LB/SF ON MILLED SURF.; 0.08 LB/SF BETWEEN LIFTS)	MATL TRANS. DEVICE	HMA SHLD, 1.75" (BOTTOM LIFT - ML OUT & MED SHLD)	HMA SHLD, 2.00" (TOP LIFT - ML OUT & MED SHLD)	AGG WEDGE SHLD, TYPE B, VAR. DEPTH (ML OUT & MED SHLD)	SHLD RUMBLE STRIPS, 16 INCH (ML OUT & MED SHLDS)	RECOVERABLE DELINEATORS - GROUND MOUNTED IN FORESLOPE
PAY CODE NO.									40600982	44000157	44000164	X4400196	44004250	60605000	X6020050	Z0001002	40600295	40600405	48203100	48203100	48102100	64200116	X2600002
LT/RT	STATION	TO	STATION	(FOOT)	(FOOT)	(FOOT)	(SQ FT)		(SQ YD)	(SQ YD)	(SQ YD)	(SQ YD)	(SQ YD)	(FOOT)	(EACH)	(TON)	(POUND)	(TON)	(TON)	(TON)	(TON)	(FOOT)	(EACH)
TAZEWELL COUNTY																							
US 24 EBL - MEDIAN SHOULDER CONTINUED																							
GRANGE RD - MEDIAN CROSS OVER																							
RT	402+31.00		413+19.00	1088.00		6	6528.0	MILL 2"	0	725.3	0	0	0	0	0	0	1044	152.3	71.1	81.2	65.4	1088.0	
STA EQU: STA 413+19.00(BK) = STA 2+46.00(AH)																							
RT	2+46.00		16+52.23	1406.23		6	8437.4	MILL 2"	0	937.5	0	0	0	0	0	0	1350	196.9	91.9	105.0	84.5	1406.2	
BL-24 RAMP D - SOUTH - MEDIAN CROSS OVER																							
RT	16+75.93		20+31.50	355.57		6	2133.4	MILL 2"	0	237.0	0	0	0	0	0	0	341	49.8	23.2	26.5	21.4	355.6	
RT	21+31.50		21+50.00	18.50		8	148.0	MILL 2"; GUARDRAIL	0	16.4	0	1.0	0	0	0	1.1	24	3.5	1.6	1.8	0.0	18.5	0.0
RT	21+50.00		22+20.00	70.00		8	560.0	MILL 2" TO 3.75" - RAMP; GU	0	0	62.2	3.9	0	0	0	4.2	90	13.1	6.1	7.0	0.0	70.0	
RT	22+20.00		23+44.00	124.00		8	992.0	MILL 3.75"; GUARDRAIL	0	0	110.2	6.9	0	0	0	7.5	159	23.1	10.8	12.3	0.0	124.0	
RT	23+44.00		25+00.00	156.00		6	936.0	MILL 3.75"	0	0	104.0	0	0	0	0	0	150	21.8	10.2	11.6	9.4	156.0	
RT	25+00.00		25+70.00	70.00		6	420.0	MILL 3.75" TO 2" - RAMP	0	0	46.7	0	0	0	0	0	67	9.8	4.6	5.2	4.2	70.0	
RT	25+70.00		35+30.00	960.00		6	5760.0	MILL 2"	0	640.0	0	0	0	0	0	0	922	134.4	62.7	71.7	57.7	960.0	
RT	35+30.00		37+51.70	221.70		6	1330.2	MILL 2"	0	147.8	0	0	0	0	0	0	213	31.0	14.5	16.6	13.3	221.7	0.0
RT	37+51.70		37+81.82	30.12		5	150.6	VAR WIDTH; MILL 2"	0	16.7	0	0	0	0	0	0	24	3.5	1.6	1.9	1.8	0	
RT	37+81.82		40+90.00	308.18		4	1232.7	MILL 2"	0	137.0	0	0	0	0	0	0	197	28.8	13.4	15.3	18.5	0	0.0
RT	40+90.00		41+60.00	70.00		4	280.0	MILL 2" TO 3.75" - RAMP	0	0	31.1	0	0	0	0	0	45	6.5	3.0	3.5	4.2	0	
RT	41+60.00		42+05.00	45.00		4	180.0	MILL 3.75"	0	0	20.0	0	0	0	0	0	29	4.2	2.0	2.2	2.7	0	
RT	41+68.40		46+49.30	480.90		6	2885.4	ADJ RAIS MED; MILL 3.75"	0	0	320.6	0	0	0	0	0	462	67.3	31.4	35.9	0	480.9	0.0
SPRING CREEK RD - MEDIAN CONNECTION																							
RT	45+67.80		46+50.00	82.20		4	328.8	MILL 3.75"	0	0	36.5	0	0	0	0	0	53	7.7	3.6	4.1	4.9	0	
RT	46+50.00		47+20.00	70.00		4	280.0	MILL 3.75" TO 2" - RAMP	0	0	31.1	0	0	0	0	0	45	6.5	3.0	3.5	4.2	0	
RT	47+20.00		53+39.24	619.24		4	2477.0	MILL 2"	0	275.2	0	0	0	0	0	0	396	57.8	27.0	30.8	37.2	0	
RT	53+39.24		53+84.10	44.86		5	224.3	VAR WIDTH; MILL 2"	0	24.9	0	0	0	0	0	0	36	5.2	2.4	2.8	2.7	0	
RT	53+84.10		90+87.60	3703.50		6	22221.0	MILL 2"	0	2469.0	0	0	0	0	0	0	3555	518.5	242.0	276.5	222.6	3703.5	0.0
RT	90+87.60		91+16.44	28.84		5	144.2	VAR WIDTH; MILL 2"	0	16.0	0	0	0	0	0	0	23	3.4	1.6	1.8	1.7	0	
RT	91+16.44		94+00.00	283.56		4	1134.2	MILL 2"	0	126.0	0	0	0	0	0	0	181	26.5	12.4	14.1	17.0	0	0.0
RT	94+00.00		94+70.00	70.00		4	280.0	MILL 2" TO 3.75" - RAMP	0	0	31.1	0	0	0	0	0	45	6.5	3.0	3.5	4.2	0	
RT	94+70.00		94+95.80	25.80		4	103.2	MILL 3.75"	0	0	11.5	0	0	0	0	0	17	2.4	1.1	1.3	1.6	0	
RT	95+05.56		97+28.47	222.91		6	1337.5	ADJ RAIS MED; MILL 3.75"	0	0	148.6	0	0	0	0	0	214	31.2	14.6	16.6	0	222.9	0.0
CUMMINGS LANE - MEDIAN CROSS OVER																							
RT	98+20.00		100+00.00	180.00		6	1080.0	ADJ RAIS MED; MILL 3.75"	0	0	120.0	0	0	0	0	0	173	25.2	11.8	13.4	0	180.0	
RT	100+00.00		100+30.00	30.00		6	180.0	MILL 3.75"	0	0	20.0	0	0	0	0	0	29	4.2	2.0	2.2	1.8	30.0	0.0
RT	100+30.00		100+70.00	40.00		6	240.0	MILL 2" - BUTT JOINT	26.7	0	0	0	0	0	0	0	38	5.6	2.6	3.0	2.4	40.0	
US 24 WBL - OUTSIDE SHOULDER																							
LT	340+60.00		341+00.00	40.00	10		400	MILL 2" TO 0.25" - RAMP	44.4	0	0	2.2	0	0	0	0	32	5.0	0.0	5.0	2.4	40.0	1.4
LT	341+00.00		346+28.60	528.60	10		5286	MILL 2"	0	587.3	0	29.4	0	0	0	0	846	123.3	57.6	65.8	31.8	528.6	
GROSENBACH RD - NORTH																							
LT	348+70.80		350+73.50	202.70	4		810.8	MILL 2"	0	90.1	0	11.3	0	0	0	0	130	18.9	8.8	10.1	12.2	0	
LT	350+73.50		351+88.50	115.00	4		460.0	MILL 2"	0	51.1	0	6.4	0	0	0	0	74	10.7	5.0	5.7	6.9	0	4.3
LT	351+88.50		353+03.50	115.00	7		805.0	VAR WIDTH; MILL 2"	0	89.4	0	6.4	0	0	0	0	129	18.8	8.8	10.0	6.9	0	
LT	353+03.50		360+10.00	706.50	10		7065.0	MILL 2"	0	785.0	0	39.3	0	0	0	0	1130	164.9	76.9	87.9	42.5	706.5	
LT	360+10.00		368+72.50	862.50	10		8625.0	MILL 2"; GUARDRAIL	0	958.3	0	47.9	0	0	0	51.8	1380	201.3	93.9	107.3	0.0	862.5	4.8
LT	368+72.50		372+13.40	340.90	10		3409.0	MILL 2"	0	378.8	0	18.9	0	0	0	0	545	79.5	37.1	42.4	20.5	340.9	
HOLLANDS GROVE RD - NORTH																							
LT	374+66.60		376+61.60	195.00	4		780.0	MILL 2"	0	86.7	0	10.8	0	0	0	0	125	18.2	8.5	9.7	11.7	0	
LT	376+61.60		377+76.60	115.00	4		460.0	MILL 2"	0	51.1	0	6.4	0	0	0	0	74	10.7	5.0	5.7	6.9	0	4.3
LT	377+76.60		378+91.60	115.00	7		805.0	VAR WIDTH; MILL 2"	0	89.4	0	6.4	0	0	0	0	129	18.8	8.8	10.0	6.9	0	
LT	378+91.60		400+07.70	2116.10	10		21161.0	MILL 2"	0	2351.2	0	117.6	0	0	0	0	3386	493.8	230.4	263.3	127.2	2116.1	5.3
GRANGE RD - NORTH																							
SUB-TOTAL (URBAN AREA - EAST PEORIA; STA 430+60 TO STA 35+30) =									44.4	8074.8	323.1	314.7	0.0	0.0	0.0	64.6	12125.1	1768.5	823.0	945.5	518.5	8842.9	20.1
SUB-TOTAL (URBAN AREA - WASHINGTON; STA 35+30 TO STA 100+70) =									26.7	3212.7	770.5	0.0	0.0	0.0	0.0	0.0	5774.3	842.1	393.0	449.1	341.0	4879.0	0.0

MODEL: Sheet 7
FILE NAME: c:\users\williams1\appdata\local\bentley\projectwise\workingdir\bfwme-pw_bentley.com_bfwme-pw-01\tony.williams\d0215423\D468F92-sht-Schedules.dgn

BFW ENGINEERING & CONSULTING

USER NAME = sskinner	DESIGNED -	REVISED -	
	DRAWN -	REVISED -	
PLOT SCALE = $SCALE$	CHECKED -	REVISED -	
PLOT DATE = 8/28/2025	DATE -	REVISED -	

STATE OF ILLINOIS
DEPARTMENT OF TRANSPORTATION

SCHEDULE OF QUANTITIES
US 24

SCALE: N.T.S. | SHEET 7 OF 13 SHEETS | STA. | TO STA.

F.A.P. RTE.	SECTION	COUNTY	TOTAL SHEETS	SHEET NO.
317	17(RS-6,TS-2);18(RS,TS)-2	TAZEWELL	85	34

CONTRACT NO. 68F92

ILLINOIS | FED. AID PROJECT

PAVING SCHEDULE - SHOULDER AREAS

LOCATION				LENGTH	OUTSIDE SHOULDER WIDTH/AVG WIDTH	MEDIAN / INSIDE SHOULDER WIDTH	AREA	COMMENTS	HMA SURF REM, BUTT JOINT	HMA SURF REM, 2.0"	HMA SURF REM, 3.75"	HOT-MIX ASPHALT SURFACE REMOVAL (SPECIAL) - FOR CL JOINT TRIMMING - SEE SPECIAL PROV	PAVED SHOULDER REMOVAL	COMB CONCRETE CURB AND GUTTER, TYPE B-6.24	INLET BOXES TO BE ADJUSTED (SPECIAL)	GUARDRAIL AGGREGATE EROSION CONTROL	POLY BIT MATLS (TACK COAT) - BETWEEN ALL LIFTS (0.08 LB/SF ON MILLED SURF.; 0.08 LB/SF BETWEEN LIFTS)	MATL TRANS. DEVICE	HMA SHLD, 1.75" (BOTTOM LIFT - ML OUT & MED SHLD)	HMA SHLD, 2.00" (TOP LIFT - ML OUT & MED SHLD)	AGG WEDGE SHLD, TYPE B, VAR. DEPTH (ML OUT & MED SHLD)	SHLD RUMBLE STRIPS, 16 INCH (ML OUT & MED SHLDS)	RECOVERABLE DELINEATORS - GROUND MOUNTED IN FORESLOPE
PAY CODE NO.									40600982	44000157	44000164	X4400196	44004250	60605000	X6020050	Z0001002	40600295	40600405	48203100	48203100	48102100	64200116	X2600002
LT/RT	STATION	TO	STATION	(FOOT)	(FOOT)	(FOOT)	(SQ FT)		(SQ YD)	(SQ YD)	(SQ YD)	(SQ YD)	(SQ YD)	(FOOT)	(EACH)	(TON)	(POUND)	(TON)	(TON)	(TON)	(TON)	(FOOT)	(EACH)
TAZEWELL COUNTY																							
US 24 WBL - OUTSIDE SHOULDER CONTINUED																							
GRANGE RD - NORTH																							
LT	402+62.90		404+57.90	195.00	4		780.0	MILL 2"	0	86.7	0	10.8	0	0	0	0	125	18.2	8.5	9.7	11.7	0	
LT	404+57.90		405+72.90	115.00	4		460.0	MILL 2"	0	51.1	0	6.4	0	0	0	0	74	10.7	5.0	5.7	6.9	0	4.3
LT	405+72.90		406+87.90	115.00	7		805.0	VAR WIDTH; MILL 2"	0	89.4	0	6.4	0	0	0	0	129	18.8	8.8	10.0	6.9	0	
LT	406+87.90		410+22.54	334.64	10		3346.4	MILL 2"	0	371.8	0	18.6	0	0	0	0	535	78.1	36.4	41.6	20.1	334.6	0.8
BL-24 RAMP B																							
STA EQU: STA 413+19.00(BK) = STA 2+46.00(AH)																							
LT	8+99.54		11+96.50	296.96	11		3266.6	VAR WIDTH GORE; MILL 2"	0	363.0	0	16.5	0	0	0	0	523	76.2	35.6	40.7	0	0	0
LT	11+96.50		21+50.00	953.50	10		9535.0	MILL 2"	0	1059.4	0	53.0	0	0	0	0	1526	222.5	103.8	118.7	57.3	953.5	
LT	21+50.00		22+20.00	70.00	10		700.0	MILL 2" TO 3.75" - RAMP	0	0	38.9	3.9	0	0	0	0	112	16.3	7.6	8.7	4.2	70.0	
LT	22+20.00		25+00.00	280.00	10		2800.0	MILL 3.75"	0	0	155.6	15.6	0	0	0	0	448	65.3	30.5	34.8	16.8	280.0	
LT	25+00.00		25+70.00	70.00	10		700.0	MILL 3.75" TO 2" - RAMP	0	0	38.9	3.9	0	0	0	0	112	16.3	7.6	8.7	4.2	70.0	
LT	25+70.00		29+39.00	369.00	10		3690.0	MILL 2"	0	410.0	0	20.5	0	0	0	0	590	86.1	40.2	45.9	22.2	369.0	
LT	29+39.00		30+50.00	111.00	8		888.0	MILL 2"; GUARDRAIL	0	98.7	0	6.2	24.7	111.00	0	37.9	142	20.7	9.7	11.1	0	111.0	
LT	30+50.00		30+60.00	10.00	0			SHLD INLET; GURADRAIL	0	0	0	0.6	0	0	1	3.4	0	0.0	0.0	0.0	0	0	7.6
LT	30+60.00		33+40.00	280.00	8		2240.0	MILL 2"; GUARDRAIL	0	248.9	0	15.6	62.2	280.00	0	95.7	358	52.3	24.4	27.9	0	280.0	
LT	33+40.00		35+30.00	190.00	10		1900.0	MILL 2"; GUARDRAIL	0	211.1	0	10.6	0	0	0	11.4	304	44.3	20.7	23.6	0	190.0	
LT	35+30.00		35+89.00	59.00	10		590.0	MILL 2"; GUARDRAIL	0	65.6	0	3.3	0	0	0	3.5	94	13.8	6.4	7.3	0	59.0	
LT	35+89.00		40+90.00	501.00	10		5010.0	MILL 2"	0	556.7	0	27.8	0	0	0	0	802	116.9	54.6	62.3	30	501.0	
LT	40+90.00		41+60.00	70.00	10		700.0	MILL 2" TO 3.75" - RAMP	0	0	38.9	3.9	0	0	0	0	112	16.3	7.6	8.7	4	70.0	
LT	41+60.00		42+53.70	93.70	10		937.0	MILL 3.75"	0	0	52.1	5.2	0	0	0	0	150	21.9	10.2	11.7	6	93.7	
SPRING CREEK RD - NORTH																							
LT	45+12.10		46+50.00	137.90	4		551.6	MILL 3.75"	0	0	30.6	7.7	0	0	0	0	88	12.9	6.0	6.9	8.3	0	
LT	46+50.00		47+20.00	70.00	4		280.0	MILL 3.75" TO 2" - RAMP	0	0	15.6	3.9	0	0	0	0	45	6.5	3.0	3.5	4.2	0	4.9
LT	47+20.00		48+12.10	92.10	4		368.4	MILL 2"	0	40.9	0	5.1	0	0	0	0	59	8.6	4.0	4.6	5.5	0	
LT	48+12.10		50+06.05	193.95	4		775.8	MILL 2"	0	86.2	0	10.8	0	0	0	0	124	18.1	8.4	9.7	11.7	0	
LT	50+06.05		52+00.00	193.95	7		1357.7	MILL 2"	0	150.9	0	10.8	0	0	0	0	217	31.7	14.8	16.9	11.7	194.0	
LT	52+00.00		80+61.00	2861.00	10		28610.0	MILL 2"	0	3178.9	0	158.9	0	0	0	0	4578	667.6	311.5	356.0	172.0	2861.0	
LT	80+61.00		84+73.50	412.50	10		4125.0	MILL 2"; GUARDRAIL	0	458.3	0	22.9	0	0	0	24.8	660	96.3	44.9	51.3	0	412.5	11.5
LT	84+73.50		94+00.00	926.50	10		9265.0	MILL 2"	0	1029.4	0	51.5	0	0	0	0	1482	216.2	100.9	115.3	55.7	926.5	
LT	94+00.00		94+70.00	70.00	10		700.0	MILL 2" TO 3.75" - RAMP	0	0	38.9	3.9	0	0	0	0	112	16.3	7.6	8.7	4.2	70.0	
LT	94+70.00		95+90.00	120.00	10		1200.0	MILL 3.75"	0	0	66.7	6.7	0	0	0	0	192	28.0	13.1	14.9	7.2	120.0	
CUMMINGS LANE - NORTH																							
US 24 WBL - MEDIAN SHOULDER																							
LT	340+60.00		341+00.00	40.00		6	240	MILL 2" TO 0.25" - RAMP	26.7	0	0	0	0	0	0	0	19	3.0	0.0	3.0	2.4	40.0	0.0
LT	341+00.00		346+88.00	588.00		6	3528	MILL 2"	0	392.0	0	0	0	0	0	0	564	82.3	38.4	43.9	35.3	588.0	
GROSENBACH RD - MEDIAN CROSS OVER																							
LT	348+38.00		372+75.00	2437.00		6	14622	MILL 2"	0	1624.7	0	0	0	0	0	0	2340	341.2	159.2	182.0	146.5	2437.0	0.0
HOLLANDS GROVE RD - MEDIAN CROSS OVER																							
LT	374+25.00		400+53.00	2628.00		6	15768	MILL 2"	0	1752.0	0	0	0	0	0	0	2523	367.9	171.7	196.2	158.0	2628.0	0.0
GRANGE RD - MEDIAN CROSS OVER																							
LT	402+00.90		404+17.50	216.60		4	866.4	MILL 2"	0	96.3	0	0	0	0	0	0	139	20.2	9.4	10.8	13.0	0	
LT	404+17.50		406+67.50	250.00		4	1000	MILL 2"	0	111.1	0	0	0	0	0	0	160	23.3	10.9	12.4	15.0	0	0.0
LT	406+67.50		407+17.50	50.00		5	250.0	VAR WIDTH; MILL 2"	0	27.8	0	0	0	0	0	0	40	5.8	2.7	3.1	3.0	0	
LT	407+17.50		413+19.00	601.50		6	3609	MILL 2"	0	401.0	0	0	0	0	0	0	577	84.2	39.3	44.9	36.2	601.5	0.0
STA EQU: STA 413+19.00(BK) = STA 2+46.00(AH)																							
LT	2+46.00		16+74.86	1428.86		6	8573.16	MILL 2"	0	952.6	0	0	0	0	0	0	1372	200.0	93.4	106.7	85.9	1428.9	0.0
BL-24 RAMP D - SOUTH - MEDIAN CROSS OVER																							
SUB-TOTAL (URBAN AREA - EAST PEORIA; STA 430+60 TO STA 35+30) =									26.7	8347.5	233.3	188.3	86.9	391.0	1.0	148.4	12711.6	1854.0	863.8	990.2	645.7	10381.5	12.7
SUB-TOTAL (URBAN AREA - WASHINGTON; STA 35+30 TO STA 100+70) =									0.0	5566.9	242.7	322.3	0.0	0.0	0.0	28.3	8715.3	1271.0	593.1	677.9	320.4	5307.7	16.4

MODEL: Sheet 8
FILE NAME: c:\users\swilliams1\appdata\local\bentley\projectwise\workingdir\bfwme-pw.bentley.com_bfwme-pw-01\tony.williams\d0215423\D468F92-sht-Schedules.dgn

BFW ENGINEERING & CONSULTING

USER NAME = sskinner	DESIGNED -	REVISED -	
	DRAWN -	REVISED -	
PLOT SCALE = $SCALE$	CHECKED -	REVISED -	
PLOT DATE = 8/28/2025	DATE -	REVISED -	

STATE OF ILLINOIS
DEPARTMENT OF TRANSPORTATION

SCHEDULE OF QUANTITIES
US 24

SCALE: N.T.S. | SHEET 8 OF 13 SHEETS | STA. | TO STA.

F.A.P. RTE.	SECTION	COUNTY	TOTAL SHEETS	SHEET NO.
317	17(RS-6,TS-2);18(RS,TS)-2	TAZEWELL	85	35

CONTRACT NO. 68F92

ILLINOIS | FED. AID PROJECT

PAVING SCHEDULE - SHOULDER AREAS

LOCATION				LENGTH	OUTSIDE SHOULDER WIDTH/AVG WIDTH	MEDIAN / INSIDE SHOULDER WIDTH	AREA	COMMENTS	HMA SURF REM, BUTT JOINT	HMA SURF REM, 2.0"	HMA SURF REM, 3.75"	HOT-MIX ASPHALT SURFACE REMOVAL (SPECIAL) - FOR CL JOINT TRIMMING - SEE SPECIAL PROV	PAVED SHOULDER REMOVAL	COMB CONCRETE CURB AND GUTTER, TYPE B-6.24	INLET BOXES TO BE ADJUSTED (SPECIAL)	GUARDRAIL AGGREGATE EROSION CONTROL	POLY BIT MATLS (TACK COAT) - BETWEEN ALL LIFTS (0.08 LB/SF ON MILLED SURF.; 0.08 LB/SF BETWEEN LIFTS)	MATL TRANS. DEVICE	HMA SHLD, 1.75" (BOTTOM LIFT - ML OUT & MED SHLD)	HMA SHLD, 2.00" (TOP LIFT - ML OUT & MED SHLD)	AGG WEDGE SHLD, TYPE B, VAR. DEPTH (ML OUT & MED SHLD)	SHLD RUMBLE STRIPS, 16 INCH (ML OUT & MED SHLDS)	RECOVERABLE DELINEATORS - GROUND MOUNTED IN FORESLOPE
PAY CODE NO.									40600982	44000157	44000164	X4400196	44004250	60605000	X6020050	Z0001002	40600295	40600405	48203100	48203100	48102100	64200116	X2600002
LT/RT	STATION	TO	STATION	(FOOT)	(FOOT)	(FOOT)	(SQ FT)		(SQ YD)	(SQ YD)	(SQ YD)	(SQ YD)	(SQ YD)	(FOOT)	(EACH)	(TON)	(POUND)	(TON)	(TON)	(TON)	(TON)	(FOOT)	(EACH)
TAZEWELL COUNTY																							
US 24 WBL - MEDIAN SHOULDER CONTINUED																							
BL-24 RAMP D - SOUTH - MEDIAN CROSS OVER																							
LT	17+30.00		20+30.00	300.00		4	1200	MILL 2"	0	133.3	0	0	0	0	0	0	192	28.0	13.1	14.9	18.0	0	
LT	20+30.00		21+50.00	120.00		4	480	MILL 2"	0	53.3	0	0	0	0	0	0	77	11.2	5.2	6.0	7.2	0	
LT	21+50.00		22+20.00	70.00		4	280	MILL 2" TO 3.75" - RAMP	0	0	15.6	3.9	0	0	0	0	45	6.5	3.0	3.5	4.2	0	0.0
LT	22+20.00		22+80.00	60.00		4	240	MILL 3.75"	0	0	13.3	3.3	0	0	0	0	38	5.6	2.6	3.0	3.6	0	
LT	22+80.00		23+30.00	100.00		6	600.0	VAR WIDTH; MILL 3.75"	0	0	33.3	5.6	0	0	0	0	96	14.0	6.5	7.5	6.0	0	
LT	23+30.00		23+50.00	20.00		8	160	MILL 3.75"	0	0	8.9	1.1	0	0	0	0	26	3.7	1.7	2.0	1.2	20.0	
LT	23+50.00		25+00.00	150.00		8	1200	MILL 3.75"; GUARDRAIL	0	0	66.7	8.3	0	0	0	9.0	192	28.0	13.1	14.9	0.0	150.0	
LT	25+00.00		25+62.50	62.50		8	500	MILL 3.75" TO 2" - RAMP; GU	0	0	27.8	3.5	0	0	0	3.8	80	11.7	5.4	6.2	0.0	62.5	
LT	25+62.50		25+70.00	7.50		6	45	MILL 3.75" TO 2" - RAMP	0	0	2.5	0.4	0	0	0	0.5	7	1.1	0.5	0.6	0.0	7.5	
LT	25+70.00		35+30.00	960.00		6	5760	MILL 2"	0	640.0	0	0	0	0	0	0	922	134.4	62.7	71.7	57.7	960.0	0.0
LT	35+30.00		40+90.00	560.00		6	3360	MILL 2"	0	373.3	0	0	0	0	0	0	538	78.4	36.6	41.8	33.7	560.0	
LT	40+90.00		41+60.00	70.00		6	420	MILL 2" TO 3.75" - RAMP	0	0	23.3	3.9	0	0	0	0	67	9.8	4.6	5.2	4.2	70.0	
LT	41+60.00		42+05.00	45.00		6	270	MILL 3.75"	0	0	15.0	2.5	0	0	0	0	43	6.3	2.9	3.4	2.7	45.0	
LT	42+05.00		43+29.52	124.52		6	747.12	ADJ RAIS MED; MILL 3.75"	0	0	41.5	6.9	0	0	0	0	120	17.4	8.1	9.3	0	124.5	0.0
SPRING CREEK RD - MEDIAN CONNECTION																							
LT	44+93.00		45+67.80	74.80		6	448.8	ADJ RAIS MED; MILL 3.75"	0	0	24.9	4.2	0	0	0	0	72	10.5	4.9	5.6	0	74.8	0.0
LT	45+67.80		46+50.00	82.20		6	493.2	MILL 3.75"	0	0	27.4	4.6	0	0	0	0	79	11.5	5.4	6.1	4.9	82.2	
LT	46+50.00		47+20.00	70.00		6	420	MILL 3.75" TO 2" - RAMP	0	0	23.3	3.9	0	0	0	0	67	9.8	4.6	5.2	4.2	70.0	
LT	47+20.00		94+00.00	4680.00		6	28080	MILL 2"	0	3120.0	0	0	0	0	0	0	4493	655.2	305.8	349.4	281.3	4680.0	0.0
LT	94+00.00		94+70.00	70.00		6	420	MILL 2" TO 3.75" - RAMP	0	0	23.3	3.9	0	0	0	0	67	9.8	4.6	5.2	4.2	70.0	
LT	94+70.00		94+95.80	25.80		6	154.8	MILL 3.75"	0	0	8.6	1.4	0	0	0	0	25	3.6	1.7	1.9	1.6	25.8	
LT	94+95.80		96+58.81	163.01		6	978.06	ADJ RAIS MED; MILL 3.75"	0	0	54.3	9.1	0	0	0	0	156	22.8	10.6	12.2	0	163.0	0.0
CUMMINGS LANE - MEDIAN CROSS OVER																							
LT	97+84.44		99+94.00	209.56		6	1257.36	ADJ RAIS MED; MILL 3.75"	0	0	69.9	11.6	0	0	0	0	201	29.3	13.7	15.6	0	209.6	0.0
US 24 EBL - RAMP C - EXIT RAMP TO BL-24																							
RT	0+00.00		0+57.03	57.03	7.5		427.7	VAR WIDTH; MILL 2"	0	47.5	0	3.2	0	0	0	0	68	10.0	4.7	5.3	3.4	0	
RT	0+57.03		6+60.00	602.97	6		3617.8	MILL 2"	0	402.0	0	33.5	0	0	0	0	579	84.4	39.4	45.0	36.2	0	7.3
RT	6+60.00		6+90.00	30.00	6		180.0	MILL 2"	0	20.0	0	1.7	0	0	0	0	29	4.2	2.0	2.2	1.8	0	
RT	6+90.00		7+30.00	40.00	6		240.0	MILL 0.25" TO 2" - RAMP	26.7	0	0	2.2	0	0	0	0	19	3.0	0	3.0	2.4	0	
LT	6+60.00		6+90.00	30.00	4		120.0	MILL 2"	0	13.3	0	1.7	0	0	0	0	19	2.8	1.3	1.5	1.8	0	0.0
LT	6+90.00		7+30.00	40.00	4		160.0	MILL 0.25" TO 2" - RAMP	17.8	0	0	2.2	0	0	0	0	13	2.0	0	2.0	2.4	0	
US 24 WBL - RAMP B - ENTRANCE RAMP FROM BL-24																							
LT	23+20.00		23+60.00	40.00	4		160.0	MILL 2" TO 0.25" - RAMP	17.8	0	0	2.2	0	0	0	0	13	2.0	0	2.0	2.4	0	0.0
LT	23+60.00		23+90.00	30.00	4		120.0	MILL 2"	0	13.3	0	1.7	0	0	0	0	19	2.8	1.3	1.5	1.8	0	
RT	23+20.00		23+60.00	40.00	4		160.0	MILL 2" TO 0.25" - RAMP	17.8	0	0	2.2	0	0	0	0	13	2.0	0	2.0	2.4	0	
RT	23+60.00		23+90.00	30.00	6		180.0	MILL 2"	0	20.0	0	1.7	0	0	0	0	29	4.2	2.0	2.2	1.8	0	13.2
RT	23+90.00		34+87.17	1097.17	6		6583.0	MILL 2"	0	731.4	0	61.0	0	0	0	0	1053	153.6	71.7	81.9	65.9	0	
RT	34+87.17		36+36.99	149.82	7.5		1123.7	VAR WIDTH; MILL 2"	0	124.9	0	8.3	0	0	0	0	180	26.2	12.2	14.0	9.0	0	
SUB-TOTAL (URBAN AREA - EAST PEORIA; STA 430+60 TO STA 35+30) =									80.0	2199.1	168.1	147.6	0.0	0.0	0.0	13.2	3708.4	541.4	248.5	292.9	229.4	1200.0	20.5
SUB-TOTAL (URBAN AREA - WASHINGTON; STA 35+30 TO STA 100+70) =									0.0	3493.3	311.6	51.9	0.0	0.0	0.0	0.0	5927.9	864.5	403.4	461.1	336.8	6174.9	0.0

MODEL: Sheet 9
FILE NAME: c:\users\twilliams1\appdata\local\bentley\projectwise\workingdir\bfwme-pw.bentley.com_bfwme-pw-01\tony.williams\d0215423\D468F92-sht-Schedules.dgn

BFW ENGINEERING & CONSULTING

USER NAME = sskinner	DESIGNED -	REVISED -
	DRAWN -	REVISED -
PLOT SCALE = $SCALE$	CHECKED -	REVISED -
PLOT DATE = 8/28/2025	DATE -	REVISED -

STATE OF ILLINOIS
DEPARTMENT OF TRANSPORTATION

SCHEDULE OF QUANTITIES
US 24

SCALE: N.T.S. | SHEET 9 OF 13 SHEETS | STA. | TO STA.

F.A.P. RTE.	SECTION	COUNTY	TOTAL SHEETS	SHEET NO.
317	17(RS-6,TS-2);18(RS,TS)-2	TAZEWELL	85	36

CONTRACT NO. 68F92

ILLINOIS | FED. AID PROJECT

PAVING SCHEDULE - SHOULDER AREAS

LOCATION				LENGTH	OUTSIDE SHOULDER WIDTH/AVG WIDTH	MEDIAN / INSIDE SHOULDER WIDTH	AREA	COMMENTS	HMA SURF REM, BUTT JOINT	HMA SURF REM, 2.0"	HMA SURF REM, 3.75"	HOT-MIX ASPHALT SURFACE REMOVAL (SPECIAL) - FOR CL JOINT TRIMMING - SEE SPECIAL PROV	PAVED SHOULDER REMOVAL	COMB CONCRETE CURB AND GUTTER, TYPE B-6.24	INLET BOXES TO BE ADJUSTED (SPECIAL)	GUARDRAIL AGGREGATE EROSION CONTROL	POLY BIT MATLS (TACK COAT) - BETWEEN ALL LIFTS (0.08 LB/SF ON MILLED SURF.; 0.08 LB/SF BETWEEN LIFTS)	MATL TRANS. DEVICE	HMA SHLD, 1.75" (BOTTOM LIFT - ML OUT & MED SHLD)	HMA SHLD, 2.00" (TOP LIFT - ML OUT & MED SHLD)	AGG WEDGE SHLD, TYPE B, VAR. DEPTH (ML OUT & MED SHLD)	SHLD RUMBLE STRIPS, 16 INCH (ML OUT & MED SHLDS)	RECOVERABLE DELINEATORS - GROUND MOUNTED IN FORESLOPE
PAY CODE NO.									40600982	44000157	44000164	X4400196	44004250	60605000	X6020050	Z0001002	40600295	40600405	48203100	48203100	48102100	64200116	X2600002
LT/RT	STATION	TO	STATION	(FOOT)	(FOOT)	(FOOT)	(SQ FT)		(SQ YD)	(SQ YD)	(SQ YD)	(SQ YD)	(SQ YD)	(FOOT)	(EACH)	(TON)	(POUND)	(TON)	(TON)	(TON)	(TON)	(FOOT)	(EACH)
TAZEWELL COUNTY																							
GROSENBACH ROAD - MEDIAN CROSS OVER																							
LT&RT	9+80.00		10+20.00	156.00		6	936	MILL 2"; SHLD ON RADIUS	0	104.0	0	0	0	0	0	0	150	21.8	10.2	11.6	9.4	0	0
GROSENBACH ROAD - NORTH																							
LT&RT	10+44.00		11+37.00	306.00	4		1407	MILL 2"	0	156.3	0	0	0	0	0	0	225	32.8	15.3	17.5	18.4	0	0
LT&RT	11+37.00		11+77.00	80.00	4		320	MILL 0.25" TO 2" - RAMP	35.6	0	0	0	0	0	0	0	26	4.0	0	4.0	4.8	0	0
																							0
HOLLANDS GROVE ROAD - MEDIAN CROSS OVER																							
LT&RT	9+77.00		10+23.00	189.00		6	1134	MILL 2"; SHLD ON RADIUS	0	126.0	0	0	0	0	0	0	181	26.5	12.3	14.1	11.4	0	0
HOLLANDS GROVE ROAD - NORTH																							
LT&RT	10+47.00		10+82.00	193.00	4		955	MILL 2"	0	106.1	0	0	0	0	0	0	153	22.3	10.4	11.9	11.6	0	0
LT&RT	10+82.00		11+22.00	88.00	4		314	MILL 0.25" TO 2" - RAMP	34.9	0	0	0	0	0	0	0	25	3.9	0	3.9	5.3	0	0
GRANGE ROAD - SOUTH																							
LT&RT	8+00.00		8+40.00	80.00	4		320	MILL 2" TO 0.25" - RAMP	35.6	0	0	0	0	0	0	0	26	4.0	0	4.0	4.8	0	0
LT&RT	8+40.00		9+52.96	353.00	4		1565	MILL 2"	0	173.9	0	0	0	0	0	0	250	36.5	17.0	19.5	21.2	0	0
GRANGE ROAD - MEDIAN CROSS OVER																							
LT&RT	9+76.98		10+23.02	136.00		6	816	MILL 2"; SHLD ON RADIUS	0	90.7	0	0	0	0	0	0	131	19.0	8.9	10.2	8.2	0	0
GRANGE ROAD - NORTH																							
LT&RT	10+47.04		11+30.00	303.00	4		1362	MILL 2"	0	151.3	0	0	0	0	0	0	218	31.8	14.8	16.9	18.2	0	0
LT&RT	11+30.00		11+70.00	80.00	4		320	MILL 0.25" TO 2" - RAMP	35.6	0	0	0	0	0	0	0	26	4.0	0	4.0	4.8	0	0
US 24 WB LT TURN LANE TO RAMP D TO SB BL-24 - MEDIAN CROSS OVER																							
LT&RT	AT 16+70			122.00		4	488	MILL 2"; SHLD ON RADIUS	0	54.2	0	0	0	0	0	0	78	11.4	5.3	6.1	7.3	0	0
RAMP D - SOUTH OF US 24 EBL																							
LT	0+02.00		0+50.00	48.00	6		288	MILL 2"	0	32.0	0	0	0	0	0	0	46	6.7	3.1	3.6	2.9	0	0
LT	0+50.00		0+90.00	40.00	6		240	MILL 0.25" TO 2" - RAMP	26.7	0	0	0	0	0	0	0	19	3.0	0	3.0	2.4	0	0
RT	0+02.00		0+50.00	48.00	4		192	MILL 2"	0	21.3	0	0	0	0	0	0	31	4.5	2.1	2.4	2.9	0	0
RT	0+50.00		0+90.00	40.00	4		160	MILL 0.25" TO 2" - RAMP	17.8	0	0	0	0	0	0	0	13	2.0	0	2.0	2.4	0	0
RAMP A - SOUTH OF US 24 EBL																							
LT	16+50.00		16+90.00	40.00	4		160	MILL 2" TO 0.25" - RAMP	17.8	0	0	0	0	0	0	0	13	2.0	0	2.0	2.4	0	0
LT	16+90.00		17+50.00	71.00	4		284	MILL 2"	0	31.6	0	0	0	0	0	0	45	6.6	3.1	3.5	4.3	0	0
RT	16+50.00		16+90.00	40.00	6		240	MILL 2" TO 0.25" - RAMP	26.7	0	0	0	0	0	0	0	19	3.0	0	3.0	2.4	0	0
RT	16+90.00		18+15.75	122.00	6		916	MILL 2"	0	101.8	0	0	0	0	0	0	147	21.4	10.0	11.4	7.3	0	0
SPRING CREEK ROAD - NORTH																							
LT&RT	7+87.00		8+27.00	80.00	4		320	MILL 2" - BUTT JOINT	35.6	0	0	0	0	0	0	0	26	4.0	0	4.0	4.8	0	0
LT&RT	8+27.00		9+51.52	364.00	4		2059	MILL 3.75"	0	0	228.8	0	0	0	0	0	329	48.0	22.4	25.6	21.9	0	0
SPRING CREEK ROAD - SOUTH																							
LT&RT	10+48.47		11+97.00	361.00	4		1444	MILL 3.75"	0	0	160.4	0	0	0	0	0	231	33.7	15.7	18.0	21.7	0	0
LT&RT	11+97.00		12+37.00	80.00	4		320	MILL 2" - BUTT JOINT	35.6	0	0	0	0	0	0	0	26	4.0	0	4.0	4.8	0	0
CUMMINGS ROAD - SOUTH																							
LT&RT	208+00.00		208+40.00	354.00	4		1503	MILL 3.75"	0	0	167.0	0	0	0	0	0	240	35.1	16.4	18.7	21.3	0	0
LT&RT	208+40.00		209+52.48	80.00	4		320	MILL 2" BUTT JOINT	35.6	0	0	0	0	0	0	0	26	4.0	0	4.0	4.8	0	0
SUB-TOTAL (URBAN AREA - EAST PEORIA; STA 430+60 TO STA 35+30) =									230.4	1149.2	0.0	0.0	0.0	0.0	0.0	0.0	1821	267.1	112.6	154.5	152.4	0.0	0.0
SUB-TOTAL (URBAN AREA - WASHINGTON; STA 35+30 TO STA 100+70) =									106.7	0.0	556.2	0.0	0.0	0.0	0.0	0.0	878	128.8	54.5	74.2	79.3	0.0	0.0
TOTAL (URBAN AREA - EAST PEORIA; STA 430+60 TO STA 35+30) =									452.7	33378.8	1191.2	1169.4	86.9	391.0	1.0	226.3	50684.7	7394.7	3427.2	3967.5	2461.0	33769.0	81.6
TOTAL (URBAN AREA - WASHINGTON; STA 35+30 TO STA 100+70) =									177.8	17642.8	2514.3	644.8	0.0	0.0	0.0	28.3	29971.7	4371.9	2032.3	2339.6	1442.7	21232.2	40.4
GRAND TOTAL =									630.4	51,021.6	3,705.5	1,814.3	86.9	391.0	1.0	254.6	80656	11,766.6	5,459.5	6,307.1	3,903.7	55,001.2	122.0
																				11,766.6			

MODEL: Sheet 10
FILE NAME: c:\users\swilliams1\appdata\local\bentley\projectwise\workingdir\bfwme-pw.bentley.com_bfwme-pw-01\tony.williams\d0215423\D468F92-sht-Schedules.dgn

BFW ENGINEERING & CONSULTING

USER NAME = sskinner	DESIGNED -	REVISED -
	DRAWN -	REVISED -
PLOT SCALE = $SCALE$	CHECKED -	REVISED -
PLOT DATE = 8/28/2025	DATE -	REVISED -

STATE OF ILLINOIS
DEPARTMENT OF TRANSPORTATION

SCHEDULE OF QUANTITIES
US 24

SCALE: N.T.S. | SHEET 10 OF 13 SHEETS | STA. | TO STA.

F.A.P. RTE.	SECTION	COUNTY	TOTAL SHEETS	SHEET NO.
317	17(RS-6,TS-2);18(RS,TS)-2	TAZEWELL	85	37
		CONTRACT NO. 68F92		
		ILLINOIS	FED. AID PROJECT	

GUARDRAIL SCHEDULE

LOCATION					EDGE OF TRAVEL WAY TO FACE OF GRAIL	LENGTH OF NEED	HAZARD STATION RANGE		LENGTH OF NEED STATION RANGE		GUARDRAIL REMOVAL	SPBGR, T A, 6' POSTS	TBT TY 1 SPL (TANG)	TBT TY 2	TERM MK DIR. APPL.
PAY CODE NUMBER					-	-	-	-	-	-	63200310	63000001	63100167	63100045	72501000
LT/	STATION	TO	STATION	MED/OUT	(FOOT)	(FOOT)	STATION	STATION	STATION	STATION	(FOOT)	(FOOT)	(EACH)	(EACH)	(EACH)
TAZEWELL COUNTY															
US 24 EBL															
RT	21+31.50		21+81.50	MED	8.0	172.3	23+32.00	23+65.00	21+47.20	23+43.00	325.0		1		1
RT	21+81.50		23+31.50	MED								150.00			
RT	23+31.50		23+44.00	MED										1	
US 24 WBL															
LT	360+10.00		360+22.50	OUT	10.0	174.5	360+00.00	366+80.00	360+00.00	368+67.00	750.0			1	
LT	360+22.50		368+22.50	OUT								800.00			
LT	368+22.50		368+72.50	OUT									1		1
LT	23+50.00		23+62.50	MED	8.0	172.3	23+32.00	23+65.00	23+54.00	25+49.80	325.0			1	
LT	23+62.50		25+12.50	MED								150.00			
LT	25+12.50		25+62.50	MED									1		1
LT	29+39.00		29+51.50	OUT	10.0	174.5	29+80.00	33+90.00	29+80.00	35+77.00	650.0			1	
LT	29+51.50		35+39.00	OUT								587.50			
LT	35+39.00		35+89.00	OUT									1		1
LT	80+61.00		80+73.50	OUT	10.0	174.5	79+80.00	82+80.00	79+80.00	84+67.00	462.5			1	
LT	80+73.50		84+23.50	OUT								350.00			
LT	84+23.50		84+73.50	OUT									1		1
SUB-TOTAL (URBAN AREA - EAST PEORIA; STA 431+00 TO STA 35+30) =											2050.0	1687.5	4	4	4
SUB-TOTAL (URBAN AREA - WASHINGTON; STA 35+30 TO STA 99+17.23) =											462.5	350.0	1	1	1
TOTAL =											2512.5	2037.5	5	5	5

MODEL: Sheet 11
FILE NAME: c:\users\williams1\appdata\local\bentley\projectwise\workingdir\bfwme-pw.bentley.com_bfwme-pw-01\tony.williams\d0215423\D468F92-sht-Schedules.dgn

BFW ENGINEERING & CONSULTING

USER NAME = sskinner	DESIGNED -	REVISED -	
	DRAWN -	REVISED -	
PLOT SCALE = $SCALE$	CHECKED -	REVISED -	
PLOT DATE = 8/28/2025	DATE -	REVISED -	

STATE OF ILLINOIS
DEPARTMENT OF TRANSPORTATION

SCHEDULE OF QUANTITIES
US 24

SCALE: N.T.S. | SHEET 11 OF 13 SHEETS | STA. | TO STA.

F.A.P. RTE.	SECTION	COUNTY	TOTAL SHEETS	SHEET NO.
317	17(RS-6,TS-2);18(RS,TS)-2	TAZEWELL	85	38

CONTRACT NO. 68F92

ILLINOIS | FED. AID PROJECT

MOWING SCHEDULE

LOCATION				LENGTH	OUTSIDE FORESLOPE WIDTH/AVG WIDTH	MEDIAN DITCH WIDTH	MOWING
PAY CODE NO.							25000750
LT/RT	STATION	TO	STATION	(FOOT)	(FOOT)	(FOOT)	(ACRE)
TAZEWELL COUNTY							
US 24 EBL - OUTSIDE FORESLOPE							
RT	341+00.00		401+42.00	6042.00	15		2.1
RT	401+42.00		413+19.00	1177.00	15		0.4
STA EQU: STA 413+19.00(BK) = STA 2+46.00(AH)							
RT	2+46.00		35+30.00	3284.00	15		1.1
RT	35+30.00		43+71.04	841.04	15		0.3
RT	43+71.04		99+17.23	5546.19	15		1.9
US 24 EBL - MEDIAN DITCH							
	341+00.00		342+63.00	163.00		28	0.1
	342+63.00		344+93.00	230.00		23	0.1
	344+93.00		347+00.00	207.00		18	0.1
	348+20.00		352+00.00	380.00		28	0.2
	352+00.00		358+00.00	600.00		31	0.4
	358+00.00		368+50.00	1050.00		34	0.8
	368+50.00		370+80.00	230.00		29	0.2
	370+80.00		372+90.00	210.00		24	0.1
	374+10.00		396+41.50	2231.50		34	1.7
	396+41.50		398+71.50	230.00		29	0.2
	398+71.50		400+65.00	193.50		24	0.1
	402+10.00		404+17.50	207.50		24	0.1
	404+17.50		407+17.50	300.00		29	0.2
	407+17.50		413+19.00	601.50		34	0.5
STA EQU: STA 413+19.00(BK) = STA 2+46.00(AH)							
	2+46.00		16+60.00	1414.00		34	1.1
	17+15.00		20+30.00	315.00		24	0.2
	20+30.00		23+30.00	300.00		29	0.2
	23+30.00		35+30.00	1200.00		34	0.9
	35+30.00		37+16.00	186.00		34	0.1
	37+16.00		41+55.00	439.00		18	0.2
	46+80.00		54+20.00	740.00		18	0.3
	54+20.00		58+10.00	390.00		34	0.3
	58+70.00		90+87.60	3217.60		34	2.5
	90+87.60		94+90.00	402.40		20	0.2
US 24 EBL - OUTSIDE FORESLOPE							
LT	341+00.00		347+63.00	663.00	15		0.2
	347+63.00		373+50.00	2587.00	15		0.9
	373+50.00		401+42.00	2792.00	15		1.0
	401+42.00		413+19.00	1177.00	15		0.4
STA EQU: STA 413+19.00(BK) = STA 2+46.00(AH)							
LT	2+46.00		35+30.00	3284.00	15		1.1
LT	35+30.00		43+71.04	841.04	15		0.3
LT	43+71.04		99+17.23	5546.19	15		1.9
SUB-TOTAL (URBAN AREA - EAST PEORIA; STA 431+00 TO STA 35+30) =							14.5
SUB-TOTAL (URBAN AREA - WASHINGTON; STA 35+30 TO STA 99+17.23) =							8.0
GRAND TOTAL =							22.5

MODEL: Sheet 12
FILE NAME: c:\users\twilliams1\appdata\local\bentley\projectwise\workingdir\fwme-pw.bentley.com_bfwme-pw01\tony.williams\d0215423\D468F92-sht-Schedules.dgn

BFW ENGINEERING & CONSULTING

USER NAME = sskinner	DESIGNED -	REVISED -	
	DRAWN -	REVISED -	
PLOT SCALE = $SCALE$	CHECKED -	REVISED -	
PLOT DATE = 8/28/2025	DATE -	REVISED -	

STATE OF ILLINOIS
DEPARTMENT OF TRANSPORTATION

SCHEDULE OF QUANTITIES
US 24

SCALE: N.T.S. | SHEET 12 OF 13 SHEETS | STA. | TO STA.

F.A.P. RTE.	SECTION	COUNTY	TOTAL SHEETS	SHEET NO.
317	17(RS-6,TS-2);18(RS,TS)-2	TAZEWELL	85	39

CONTRACT NO. 68F92

ILLINOIS | FED. AID PROJECT

PAVEMENT MARKING QUANTITIES

LOCATION				LENGTH	SHORT TERM PAVEMENT MARKING	SHORT TERM PAVEMENT MARKING REMOVAL	PAVEMENT MARKING REMOVAL - WATER BLASTING	RAISED REFL PVT MK REMOVAL	GROOVING FOR RECESSED PAVEMENT MARKING, L & S	GROOVING FOR RECESSED PAVEMENT MARKING, 5"	GROOVING FOR RECESSED PAVEMENT MARKING 9"	GROOVING FOR RECESSED PAVEMENT MARKING 13"	GROOVING FOR RECESSED PAVEMENT MARKING 25"	MODIFIED URETHANE PAVEMENT MARKING - L&S (WHITE)	MODIFIED URETHANE PAVEMENT MARKING - LINE 4" (SKIP DASH, WHITE)	MODIFIED URETHANE PAVEMENT MARKING - LINE 4" (SOLID, WHITE)	MODIFIED URETHANE PAVEMENT MARKING - LINE 4" (SOLID, YELLOW)	MODIFIED URETHANE PAVEMENT MARKING - LINE 8" (WHITE)	MODIFIED URETHANE PAVEMENT MARKING - LINE 8" (SKIP DASH, WHITE)	MODIFIED URETHANE PAVEMENT MARKING - LINE 12" (WHITE)	MODIFIED URETHANE PAVEMENT MARKING - LINE 24" (WHITE)	RAISED REFL PVT MK
PAY CODE NUMBER					70300100	70300150	78300202	78300200	78011000	78011025	78011045	78011065	78011125	78009000	78009004	78009004	78009004	78009008	78009008	78009012	78009024	78100100
LT/RT	STATION	TO	STATION	(FOOT)	(FOOT)	(SQ FT)	(SQ FT)	(EACH)	(SQ FT)	(FOOT)	(FOOT)	(FOOT)	(FOOT)	(SQ FT)	(FOOT)	(FOOT)	(FOOT)	(FOOT)	(FOOT)	(FOOT)	(FOOT)	(EACH)
TAZEWELL COUNTY																						
US 24 EBL																						
RT	340+60.00		342+63.00	203.0	56.8	9.5	0	3	0	456.8	0.0	0	0	0	50.8	203.0	203.0	0	0	0	0	3
RT	342+63.00		348+38.00	575.0	200.6	33.4	0	12	46.8	1253.8	263.5	0.0	0.0	46.8	143.8	575.0	535.0	206.0	57.5	0.0	0.0	12
RT	348+38.00		368+50.00	2012.0	563.4	93.9	0	25	0	4527.0	0.0	0	0	0	503.0	2012.0	2012.0	0	0	0	0	25
RT	368+50.00		374+40.00	590.0	208.4	34.7	0	13	46.8	1287.5	281.5	0.0	0.0	46.8	147.5	590.0	550.0	224.0	57.5	0.0	0.0	13
RT	374+40.00		394+21.10	1981.1	554.7	92.5	0	25	0	4457.5	0.0	0	0	0	495.3	1981.1	1981.1	0	0	0	0	25
RT	394+21.10		402+76.30	855.2	309.6	51.6	0	24	93.6	1599.0	662.5	0.0	52.0	93.6	183.8	600.0	815.2	530.0	132.5	0.0	52.0	24
RT	402+76.30		412+52.07	975.8	273.2	45.5	0	12	0	2195.5	0.0	0	0	0	243.9	975.8	975.8	0	0	0	0	12
RT	412+52.07		413+19.00	66.9	18.7	3.1	0	4	0	150.6	16.7	0	0	0	16.7	66.9	66.9	0	16.7	0	0	4
STA EQU: STA 413+19.00(BK) = STA 2+46.00(AH)																						
RT	2+46.00		8+42.35	596.4	324.6	54.1	0	61	0.0	1481.8	818.3	0.0	0.0	0.0	149.1	666.4	666.4	760.0	58.3	0.0	0.0	61
RT	8+42.35		16+48.00	805.7	225.6	37.6	0	10	0	1812.7	0.0	0	0	0	201.4	805.7	805.7	0	0	0	0	10
RT	16+48.00		16+75.00	27.0	5.8	1.0	0	0	0.0	16.8	0.0	0.0	0.0	0.0	6.8	5.0	5.0	0.0	0	0.0	0.0	0
RT	16+75.00		26+88.68	1013.7	283.8	47.3	0	13	0	2280.8	0.0	0	0	0	253.4	1013.7	1013.7	0	0	0	0	13
RT	26+88.68		27+63.15	74.5	17.9	3.0	0	1	0.0	93.1	0.0	0.0	0.0	0.0	18.6	0.0	74.5	0.0	0	0.0	0.0	1
RT	27+63.15		35+30.00	766.9	214.7	35.8	0	10	0	1725.4	0.0	0	0	0	191.7	766.9	766.9	0	0	0	0	10
RT	35+30.00		36+30.00	100.0	28.0	4.7	0	1	0	225.0	0.0	0	0	0	25.0	100.0	100.0	0	0	0	0	1
RT	36+30.00		53+84.10	1754.1	870.1	145.0	0	76	124.8	4069.4	2077.2	227.5	0.0	124.8	438.5	1556.8	2074.1	1870.0	207.2	227.5	0.0	76
RT	53+84.10		90+31.50	3647.4	1021.3	170.2	0	83	0	8206.7	0.0	0	0	0	911.9	3647.4	3647.4	0	0	0	0	83
RT	90+31.50		100+70.00	1038.5	395.3	65.9	0	31	93.6	1919.9	856.9	294.9	68.0	93.6	229.6	771.8	918.5	720.0	136.9	294.9	68.0	31
US 24 WBL																						
LT	340+60.00		346+28.60	568.6	159.2	26.5	0	7	0	1279.4	0.0	0	0	0	142.2	568.6	568.6	0	0	0	0	7
LT	346+28.60		353+03.50	674.9	227.7	37.9	0	15	46.8	1236.3	307.5	0.0	0.0	46.8	168.7	432.7	634.9	250.0	57.5	0.0	0.0	15
LT	353+03.50		372+13.40	1909.9	534.8	89.1	0	24	0	4297.3	0.0	0	0	0	477.5	1909.9	1909.9	0	0	0	0	24
LT	372+13.40		378+91.60	678.2	232.2	38.7	0	15	46.8	1232.7	327.5	0.0	0.0	46.8	169.5	425.0	638.2	270.0	57.5	0.0	0.0	15
LT	378+91.60		400+07.70	2116.1	592.5	98.8	0	26	0	4761.2	0.0	0	0	0	529.0	2116.1	2116.1	0	0	0	0	26
LT	400+07.70		406+87.90	680.2	242.6	40.4	0	20	93.6	1205.3	572.5	0.0	52.0	93.6	140.1	425.0	640.2	440.0	132.5	0.0	52.0	20
LT	406+87.90		410+22.54	334.6	93.7	15.6	0	4	0	752.9	0.0	0	0	0	83.7	334.6	334.6	0	0	0	0	4
LT	410+22.54		413+19.00	296.5	83.0	13.8	0	4	0.0	667.0	74.1	0.0	0.0	0.0	74.1	296.5	296.5	0.0	74.1	0.0	0.0	4
STA EQU: STA 413+19.00(BK) = STA 2+46.00(AH)											0.0											
LT	2+46.00		12+30.00	984.0	481.1	80.2	0	12	0.0	2354.0	1138.4	0.0	0.0	0.0	246.0	1054.0	1054.0	1000.0	138.4	0.0	0.0	12
LT	12+30.00		16+91.00	461.0	131.5	21.9	0	6	0	1097.3	0.0	0	0	0	115.3	521.0	461.0	0	0	0	0	6
LT	16+91.00		23+30.00	639.0	251.5	41.9	0	16	46.8	1552.8	415.0	0.0	23.0	46.8	159.8	694.0	699.0	340.0	75.0	0.0	23.0	16
LT	23+30.00		35+30.00	1200.0	336.0	56.0	0	15	0	2700.0	0.0	0	0	0	300.0	1200.0	1200.0	0	0	0	0	15
LT	35+30.00		42+53.70	723.7	202.6	33.8	0	9	0	1628.3	0.0	0	0	0	180.9	723.7	723.7	0	0	0	0	9
LT	42+53.70		52+00.00	946.3	342.1	57.0	0	24	46.8	1707.3	567.0	18.6	0.0	46.8	236.6	687.9	782.8	470.0	97.0	18.6	0.0	24
LT	52+00.00		95+90.00	4390.0	1229.2	204.9	0	55	0	9877.5	0.0	0	0	0	1097.5	4390.0	4390.0	0	0	0	0	55
LT	95+90.00		100+70.00	480.0	138.4	23.1	0	12	62.4	500.0	250.0	0.0	54.0	62.4	90.0	0.0	410.0	250.0	0	0.0	54.0	12
GROSENBACH ROAD - NORTH																						
	10+44.00		11+77.00	133.0	53.2	8.9	0	0	0.0	641.0	135.0	120.0	28.0	0	0.0	415.0	226.0	135.0	0	120.0	28.0	0
HOLLANDS GROVE ROAD - NORTH																						
	10+47.00		11+22.00	75.0	30.0	5.0	0	0	0.0	405.0	135.0	120.0	28.0	0	0.0	295.0	110.0	135.0	0	120.0	28.0	0
GRANGE ROAD - SOUTH																						
	8+00.00		9+52.96	153.0	61.2	10.2	0	0	0.0	710.9	160.0	130.0	28.0	0	0.0	445.0	265.9	160.0	0	130.0	28.0	0
GRANGE ROAD - NORTH																						
	10+47.04		11+70.00	123.0	49.2	8.2	0	0	0.0	600.9	160.0	130.0	28.0	0	0.0	395.0	205.9	160.0	0	130.0	28.0	0
RAMP D - SOUTH OF US 24 EBL																						
	0+02.00		0+90.00	88.0	7.0	1.2	0	0	0.0	180.0	0.0	0.0	0.0	0	0.0	90.0	90.0	0.0	0	0.0	0.0	0
RAMP A - SOUTH OF US 24 EBL																						
	16+50.00		18+15.75	165.8	13.3	2.2	0	0	0.0	317.0	0.0	0.0	16.0	0	0.0	189.0	128.0	0.0	0	0.0	16.0	0
SPRING CREEK ROAD - NORTH																						
	7+87.00		9+51.52	164.5	65.8	11.0	0	0	31.2	754.0	150.0	230.0	28.0	31.2	0.0	465.0	289.0	150.0	0	230.0	28.0	0
SPRING CREEK ROAD - SOUTH																						
	10+48.47		12+37.00	188.5	75.4	12.6	0	0	31.2	715.0	260.0	150.0	18.0	31.2	0.0	455.0	260.0	260.0	0	150.0	18.0	0
CUMMINGS ROAD - SOUTH																						
	208+00.00		209+52.48	152.5	61.0	10.2	0	0	31.2	709.0	235.0	140.0	42.0	31.2	0.0	444.0	265.0	235.0	0	140	42	0
CUMMINGS ROAD - NORTH																						
	210+47.00		211+50.00	103.0	61.8	10.3	605	0	31.2	529.0	245.0	150.0	42.0	31.2	0.0	353.0	176.0	245.0	0	150	42	0
SUB-TOTAL (URBAN AREA - EAST PEORIA) =					6838	1140	0	377	421	49329	5468	500	255	421	5212	22068	22050	4610	858	500	255	377
SUB-TOTAL (URBAN AREA - WASHINGTON) =					4491	748	605	291	452	30841	4641	1211	252	452	3210	13595	14037	4200	441	1211	252	291
TOTAL =					11329	1888	605	668	874	80170	10109	1711	507	874	8422	35662	36086	8810	1299	1711	507	668
																80170		10109				

MODEL: Sheet 13
FILE NAME: c:\users\twilliams1\appdata\local\bentley\projectwise\workingdir\bfwme-pw.bentley.com_bfwme-pw-01\tony.williams\d0215423\D468F92-sht-Schedules.dgn

BFW ENGINEERING & CONSULTING

USER NAME = sskinner	DESIGNED -	REVISED -
	DRAWN -	REVISED -
PLOT SCALE = $SCALE$	CHECKED -	REVISED -
PLOT DATE = 8/28/2025	DATE -	REVISED -

STATE OF ILLINOIS
DEPARTMENT OF TRANSPORTATION

SCHEDULE OF QUANTITIES
US 24

SCALE: N.T.S. | SHEET 13 OF 13 SHEETS | STA. | TO STA.

F.A.P. RTE.	SECTION	COUNTY	TOTAL SHEETS	SHEET NO.
317	17(RS-6,TS-2):18(RS,TS)-2	TAZEWELL	85	40
		CONTRACT NO. 68F92		
		ILLINOIS FED. AID PROJECT		

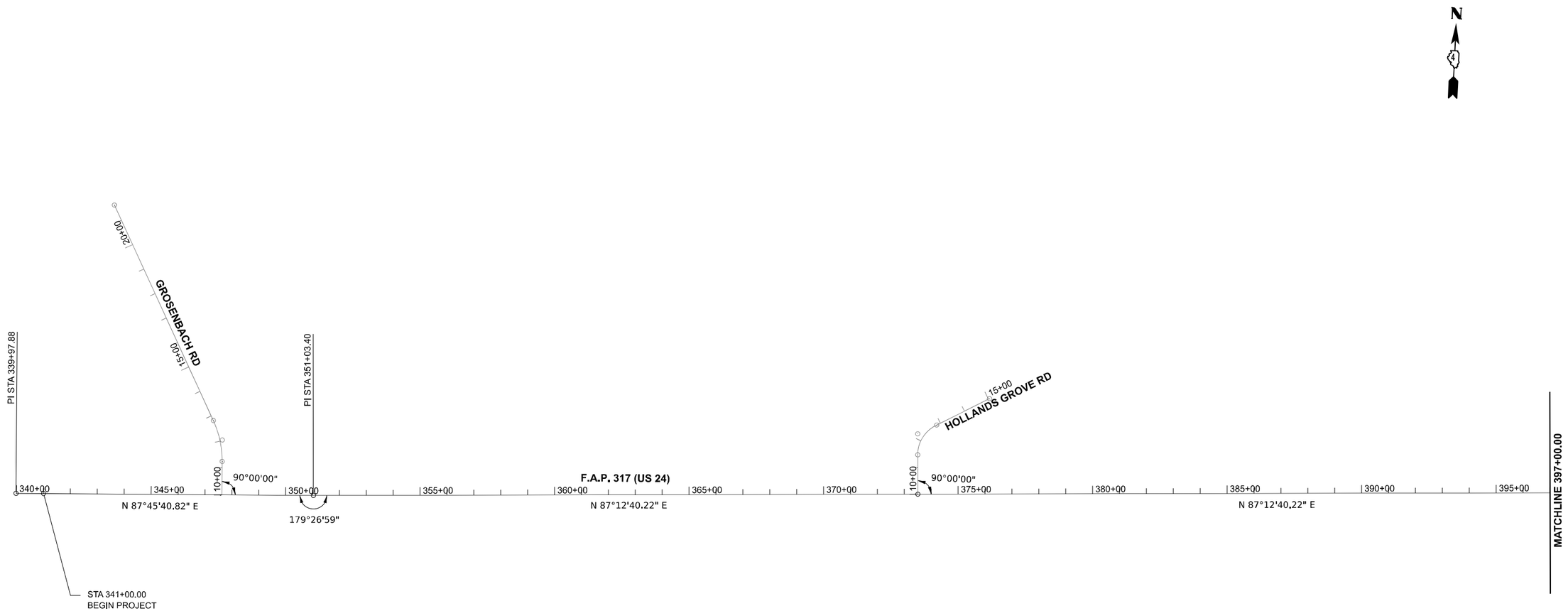

CENTERLINE POINTS

LOCATION:	STATION	DESCRIPTION	NORTHING	EASTING
US 24	339+97.88	PI STA. US 24 EXCL	1,475,089.3391	2,479,718.1166
	351+03.40	PI STA. US 24 EXCL	1,475,132.5229	2,480,822.7905

MODEL: ExCL9 - Plan 1 [Sheet]
FILE NAME: pw://bfwms-pw.bentley.com:bfwms-pw-01\Documents\BFW\PROJECTS\2025 PROJECTS\25330 - IDOT D4 PTB 213-039 WO#6 US 24\25330\IDOT\CAD_Sheets\D468F92-sht-ATB.dgn

BFW ENGINEERING & CONSULTING

USER NAME = sskinner	DESIGNED -	REVISED -	
	DRAWN -	REVISED -	
PLOT SCALE = 0.16666633 ' / in.	CHECKED -	REVISED -	
PLOT DATE = 10/16/2025	DATE -	REVISED -	

STATE OF ILLINOIS
DEPARTMENT OF TRANSPORTATION

ALIGNMENT, TIES & BENCHMARKS
US 24

SCALE: 1"=200' | SHEET 1 OF 3 SHEETS | STA. 337+00.00 TO STA. 397+00.00

F.A.P. RTE.	SECTION	COUNTY	TOTAL SHEETS	SHEET NO.
317	17(RS-6,TS-2);18(RS,TS)-2	TAZEWELL	85	41
		CONTRACT NO. 68F92		
		ILLINOIS	FED. AID PROJECT	

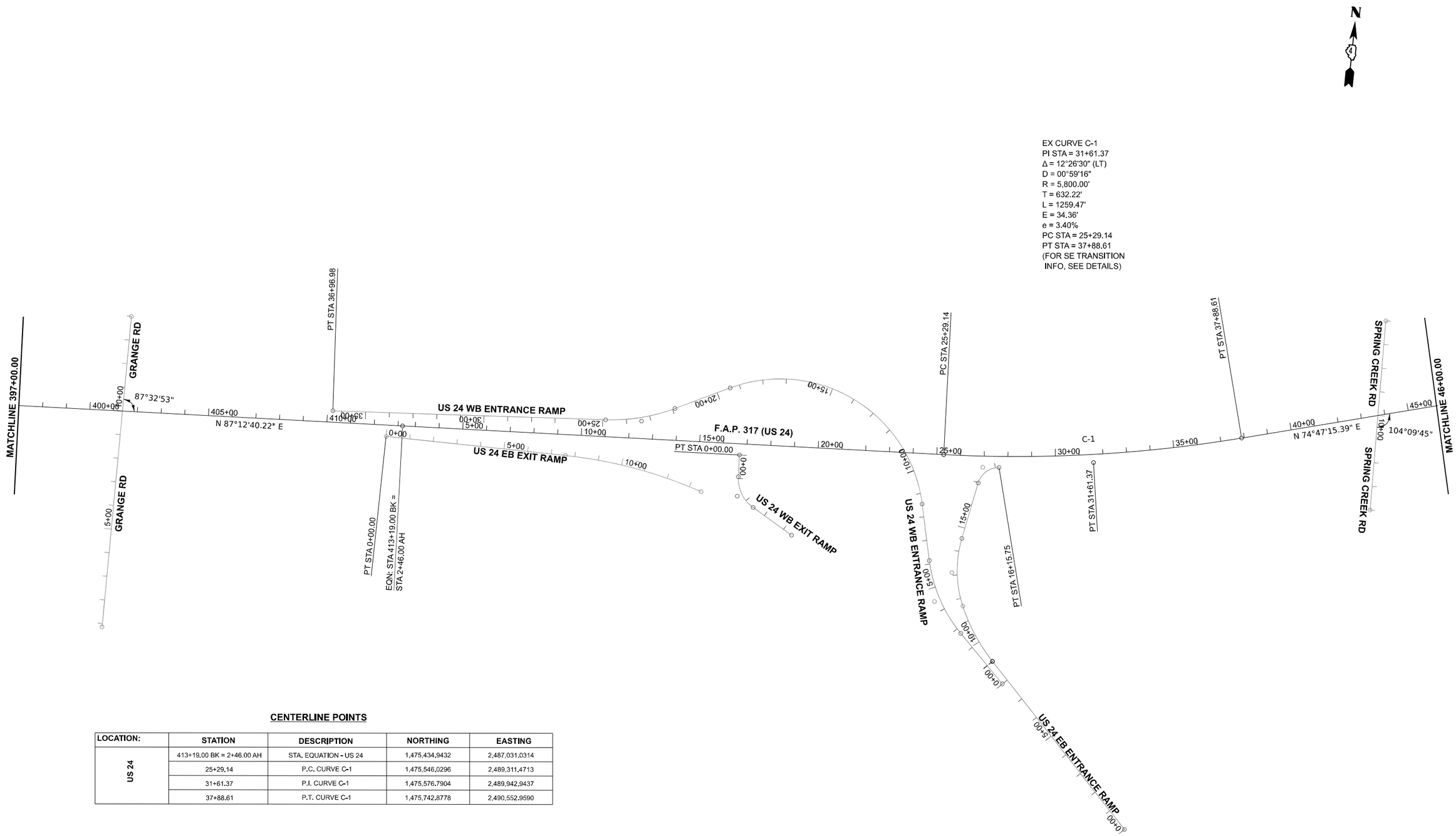

CENTERLINE POINTS

LOCATION:	STATION	DESCRIPTION	NORTHING	EASTING
US 24	413+19.00 BK = 2+46.00 AH	STA. EQUATION - US 24	1,475,434.9432	2,487,031.0314
	25+29.14	P.C. CURVE C-1	1,475,546.0296	2,489,311.4713
	31+61.37	P.I. CURVE C-1	1,475,576.7904	2,489,942.9437
	37+88.61	P.T. CURVE C-1	1,475,742.8778	2,490,552.9590

MODEL: ExCL9 - Plan 2 [Sheet]
FILE NAME: pw://bfwmc-pw.bentley.com:bfwmc-pw-01/Documents/BFW/PROJECTS/2025 PROJECTS/25330 - IDOT D4 PTB 213-039 WO#6 US 24/25330/IDOT/CAD_Sheets/D468F92-sht-ATB.dgn

BFW™ ENGINEERING & CONSULTING

USER NAME = sskinner	DESIGNED -	REVISED -	
	DRAWN -	REVISED -	
PLOT SCALE = 0.16666633 ' / in.	CHECKED -	REVISED -	
PLOT DATE = 10/16/2025	DATE -	REVISED -	

STATE OF ILLINOIS
DEPARTMENT OF TRANSPORTATION

ALIGNMENT, TIES & BENCHMARKS
US 24

SCALE: 1"=200' | SHEET 2 OF 3 SHEETS | STA. 397+00.00 TO STA. 46+00.00 R2

F.A.P. RTE.	SECTION	COUNTY	TOTAL SHEETS	SHEET NO.
317	17(RS-6,TS-2);18(RS,TS)-2	TAZEWELL	85	42

CONTRACT NO. 68F92

ILLINOIS | FED. AID PROJECT

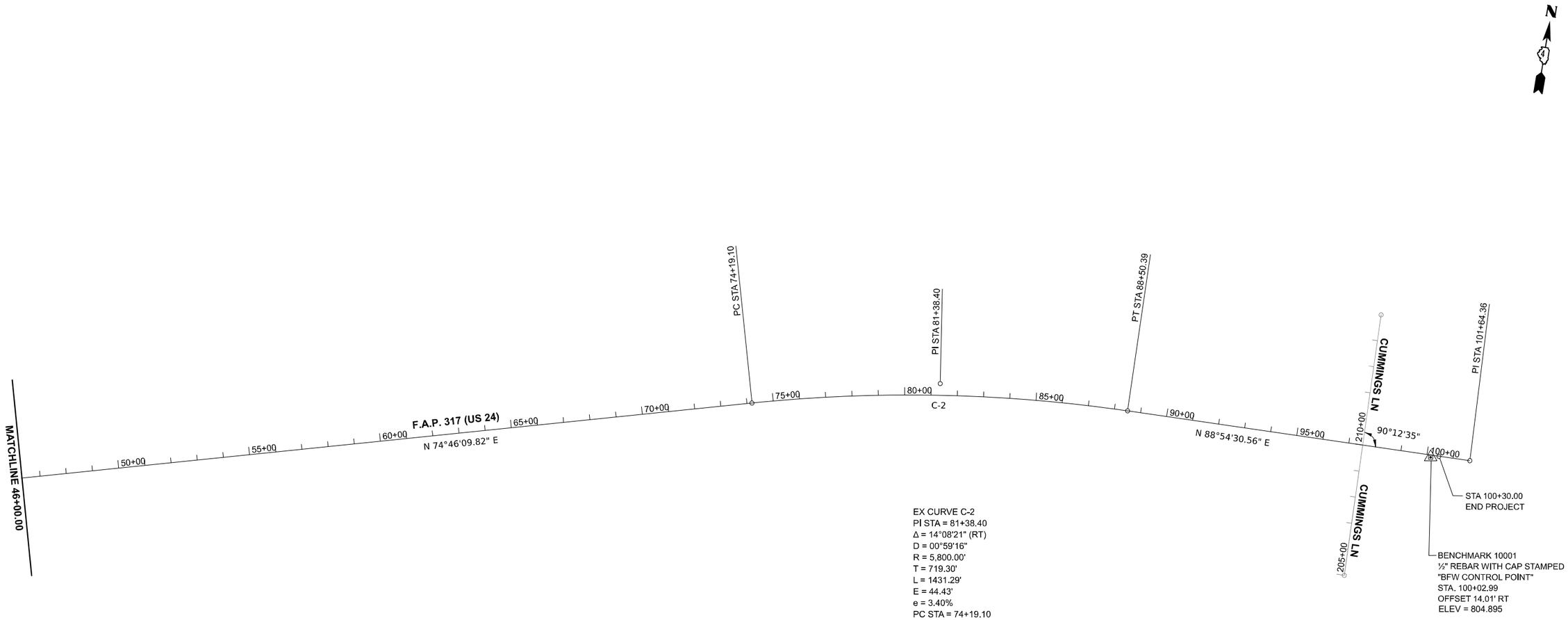

EX CURVE C-2
PI STA = 81+38.40
Δ = 14°08'21" (RT)
D = 00°59'16"
R = 5,800.00'
T = 719.30'
L = 1431.29'
E = 44.43'
e = 3.40%
PC STA = 74+19.10
PT STA = 88+50.39
(FOR SE TRANSITION
INFO, SEE DETAILS)

CENTERLINE POINTS

LOCATION:	STATION	DESCRIPTION	NORTHING	EASTING
US 24	74+19.10	P.C. CURVE C-2	1,476,696.6233	2,494,055.9289
	81+38.40	P.I. CURVE C-2	1,476,885.5862	2,494,749.9624
	88+50.39	P.T. CURVE C-2	1,476,899.2883	2,495,469.1298

MODEL: ExCL9 - Plan 3 [Sheet]
FILE NAME: pw://bfwmo-pw.bentley.com:bfwmo-pw-01/Documents/BFW/PROJECTS/2025 PROJECTS/25330 - IDOT D4 PTB 213-039 W0#6 US 24/25330/DOT/CAD_Sheets/D468F92-alnt-ATB.dgn

BFW ENGINEERING & CONSULTING

USER NAME = sskinner	DESIGNED -	REVISED -	
	DRAWN -	REVISED -	
PLOT SCALE = 0.16666633 ' / in.	CHECKED -	REVISED -	
PLOT DATE = 10/16/2025	DATE -	REVISED -	

STATE OF ILLINOIS
DEPARTMENT OF TRANSPORTATION

ALIGNMENT, TIES & BENCHMARKS
US 24

SCALE: 1"=200' | SHEET 3 OF 3 SHEETS | STA. 46+00.00 R2 TO STA. 106+27.00 R2

F.A.P. RTE.	SECTION	COUNTY	TOTAL SHEETS	SHEET NO.
317	17(RS-6,TS-2);18(RS,TS)-2	TAZEWELL	85	43
		CONTRACT NO. 68F92		
	ILLINOIS	FED. AID PROJECT		

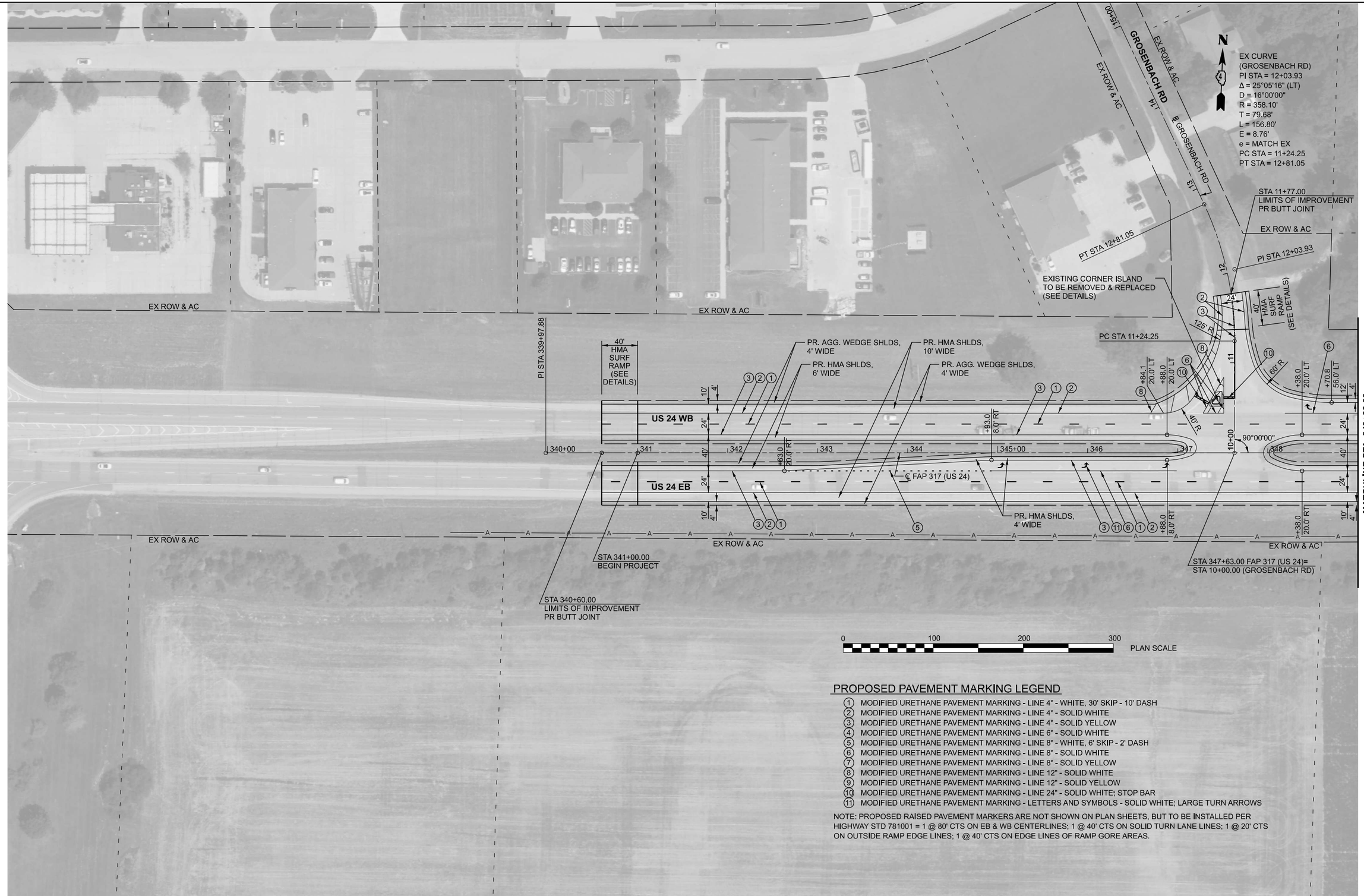

PROPOSED PAVEMENT MARKING LEGEND

1. MODIFIED URETHANE PAVEMENT MARKING - LINE 4" - WHITE, 30' SKIP - 10' DASH
2. MODIFIED URETHANE PAVEMENT MARKING - LINE 4" - SOLID WHITE
3. MODIFIED URETHANE PAVEMENT MARKING - LINE 4" - SOLID YELLOW
4. MODIFIED URETHANE PAVEMENT MARKING - LINE 6" - SOLID WHITE
5. MODIFIED URETHANE PAVEMENT MARKING - LINE 8" - WHITE, 6' SKIP - 2' DASH
6. MODIFIED URETHANE PAVEMENT MARKING - LINE 8" - SOLID WHITE
7. MODIFIED URETHANE PAVEMENT MARKING - LINE 8" - SOLID YELLOW
8. MODIFIED URETHANE PAVEMENT MARKING - LINE 12" - SOLID WHITE
9. MODIFIED URETHANE PAVEMENT MARKING - LINE 12" - SOLID YELLOW
10. MODIFIED URETHANE PAVEMENT MARKING - LINE 24" - SOLID WHITE; STOP BAR
11. MODIFIED URETHANE PAVEMENT MARKING - LETTERS AND SYMBOLS - SOLID WHITE; LARGE TURN ARROWS

NOTE: PROPOSED RAISED PAVEMENT MARKERS ARE NOT SHOWN ON PLAN SHEETS, BUT TO BE INSTALLED PER HIGHWAY STD 781001 = 1 @ 80' CTS ON EB & WB CENTERLINES; 1 @ 40' CTS ON SOLID TURN LANE LINES; 1 @ 20' CTS ON OUTSIDE RAMP EDGE LINES; 1 @ 40' CTS ON EDGE LINES OF RAMP GORE AREAS.

MODEL: US24 Plan 1
FILE NAME: pw://bfwmc-pw.bentley.com:bfwmc-pw-01/Documents/BFW/PROJECTS/2025 PROJECTS/25330 - IDOT D4 PTB 213-039 WO#6 US 24/25330/IDOT/CAD_Sheets/D408F92-sht-Plan.dgn

BFW ENGINEERING & CONSULTING	USER NAME = sskinner	DESIGNED -	REVISED -	STATE OF ILLINOIS DEPARTMENT OF TRANSPORTATION	PLAN US 24			F.A.P. RTE.	SECTION	COUNTY	TOTAL SHEETS / SHEET NO.
		DRAWN -	REVISED -					317	17(RS-6,TS-2);18(RS,TS)-2	TAZEWELL	85 / 44
	PLOT SCALE = 0.16666633 ' / in.	CHECKED -	REVISED -							CONTRACT NO. 68F92	
	PLOT DATE = 10/16/2025	DATE -	REVISED -		SCALE: 1"=50'	SHEET 1 OF 13 SHEETS	STA. 334+00.00 TO STA. 349+00.00		ILLINOIS	FED. AID PROJECT	

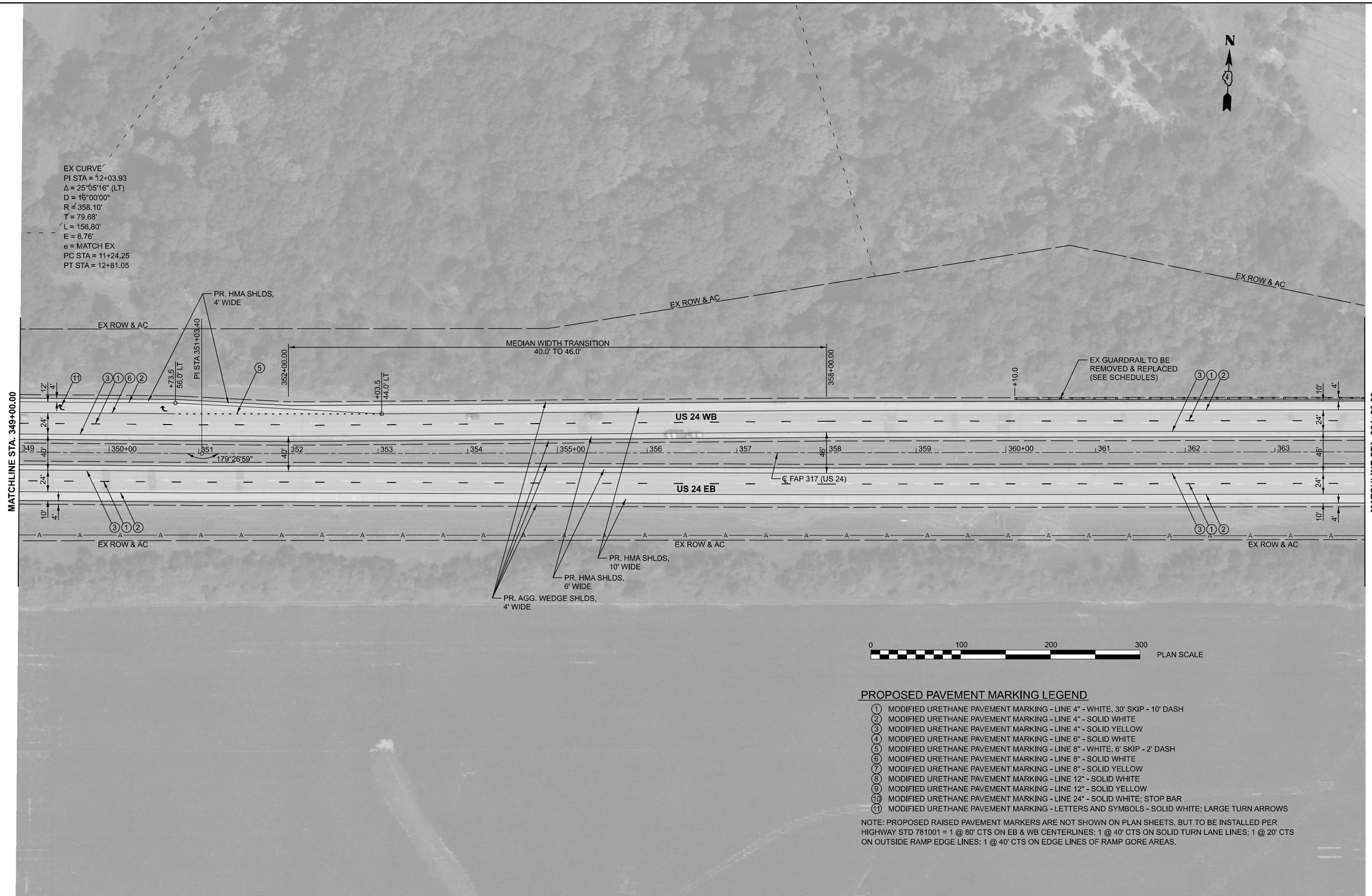

PROPOSED PAVEMENT MARKING LEGEND

1. MODIFIED URETHANE PAVEMENT MARKING - LINE 4" - WHITE, 30' SKIP - 10' DASH
2. MODIFIED URETHANE PAVEMENT MARKING - LINE 4" - SOLID WHITE
3. MODIFIED URETHANE PAVEMENT MARKING - LINE 4" - SOLID YELLOW
4. MODIFIED URETHANE PAVEMENT MARKING - LINE 6" - SOLID WHITE
5. MODIFIED URETHANE PAVEMENT MARKING - LINE 8" - WHITE, 6' SKIP - 2' DASH
6. MODIFIED URETHANE PAVEMENT MARKING - LINE 8" - SOLID WHITE
7. MODIFIED URETHANE PAVEMENT MARKING - LINE 8" - SOLID YELLOW
8. MODIFIED URETHANE PAVEMENT MARKING - LINE 12" - SOLID WHITE
9. MODIFIED URETHANE PAVEMENT MARKING - LINE 12" - SOLID YELLOW
10. MODIFIED URETHANE PAVEMENT MARKING - LINE 24" - SOLID WHITE; STOP BAR
11. MODIFIED URETHANE PAVEMENT MARKING - LETTERS AND SYMBOLS - SOLID WHITE; LARGE TURN ARROWS

NOTE: PROPOSED RAISED PAVEMENT MARKERS ARE NOT SHOWN ON PLAN SHEETS, BUT TO BE INSTALLED PER HIGHWAY STD 781001 = 1 @ 80' CTS ON EB & WB CENTERLINES; 1 @ 40' CTS ON SOLID TURN LANE LINES; 1 @ 20' CTS ON OUTSIDE RAMP EDGE LINES; 1 @ 40' CTS ON EDGE LINES OF RAMP GORE AREAS.

MODEL: US24 Plan 2
FILE NAME: pw://bfwms-pw.bentley.com:bfwms-pw01/Documents/BFW/PROJECTS/2025 PROJECTS/23330 - IDOT D4 PTB 213-039 WO#6 US 24/23330/IDOT/CAD Sheets/D468F92-sht-4Plan.dgn

BFW™ ENGINEERING & CONSULTING

USER NAME = sskinner	DESIGNED -	REVISED -	
	DRAWN -	REVISED -	
PLOT SCALE = 0.16666633 ' / in.	CHECKED -	REVISED -	
PLOT DATE = 10/16/2025	DATE -	REVISED -	

STATE OF ILLINOIS
DEPARTMENT OF TRANSPORTATION

PLAN
US 24

SCALE: 1"=50' | SHEET 2 OF 13 SHEETS | STA. 349+00.00 TO STA. 364+00.00

F.A.P. RTE.	SECTION	COUNTY	TOTAL SHEETS	SHEET NO.
317	17(RS-6,TS-2);18(RS,TS)-2	TAZEWELL	85	45
		CONTRACT NO. 68F92		
		ILLINOIS	FED. AID PROJECT	

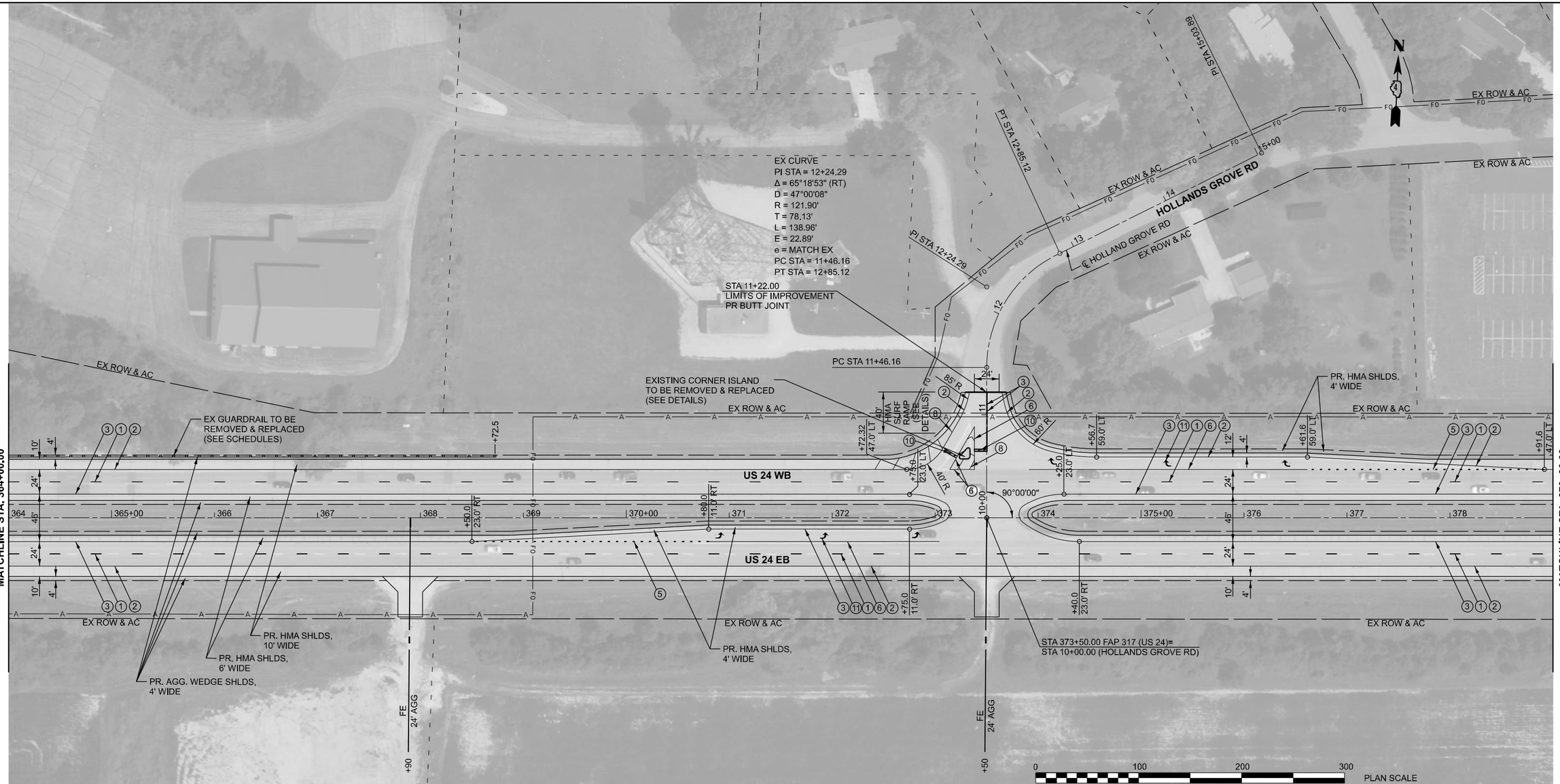

PROPOSED PAVEMENT MARKING LEGEND

1. MODIFIED URETHANE PAVEMENT MARKING - LINE 4" - WHITE, 30' SKIP - 10' DASH
2. MODIFIED URETHANE PAVEMENT MARKING - LINE 4" - SOLID WHITE
3. MODIFIED URETHANE PAVEMENT MARKING - LINE 4" - SOLID YELLOW
4. MODIFIED URETHANE PAVEMENT MARKING - LINE 6" - SOLID WHITE
5. MODIFIED URETHANE PAVEMENT MARKING - LINE 8" - WHITE, 6' SKIP - 2' DASH
6. MODIFIED URETHANE PAVEMENT MARKING - LINE 8" - SOLID WHITE
7. MODIFIED URETHANE PAVEMENT MARKING - LINE 8" - SOLID YELLOW
8. MODIFIED URETHANE PAVEMENT MARKING - LINE 12" - SOLID WHITE
9. MODIFIED URETHANE PAVEMENT MARKING - LINE 12" - SOLID YELLOW
10. MODIFIED URETHANE PAVEMENT MARKING - LINE 24" - SOLID WHITE; STOP BAR
11. MODIFIED URETHANE PAVEMENT MARKING - LETTERS AND SYMBOLS - SOLID WHITE; LARGE TURN ARROWS

NOTE: PROPOSED RAISED PAVEMENT MARKERS ARE NOT SHOWN ON PLAN SHEETS, BUT TO BE INSTALLED PER HIGHWAY STD 781001 = 1 @ 80' CTS ON EB & WB CENTERLINES; 1 @ 40' CTS ON SOLID TURN LANE LINES; 1 @ 20' CTS ON OUTSIDE RAMP EDGE LINES; 1 @ 40' CTS ON EDGE LINES OF RAMP GORE AREAS.

MODEL: US24 Plan 3
FILE NAME: pw://bfwmo-pw.bentley.com:bfwmo-pw-01/Documents/BFW/PROJECTS/2025 PROJECTS/25330 - IDOT D4 PTB 213-039 WO#6 US 24/25330/IDOT/CAD_Sheets/D468F92-sht-Plan.dgn

BFW™ ENGINEERING & CONSULTING

USER NAME = sskinner	DESIGNED -	REVISED -	
	DRAWN -	REVISED -	
PLOT SCALE = 0.16666633 ' / in.	CHECKED -	REVISED -	
PLOT DATE = 10/16/2025	DATE -	REVISED -	

STATE OF ILLINOIS
DEPARTMENT OF TRANSPORTATION

PLAN
US 24

SCALE: 1"=50' | SHEET 3 OF 13 SHEETS | STA. 364+00.00 TO STA. 379+00.00

F.A.P. RTE.	SECTION	COUNTY	TOTAL SHEETS	SHEET NO.
317	17(RS-6,TS-2);18(RS,TS)-2	TAZEWELL	85	46

CONTRACT NO. 68F92

ILLINOIS | FED. AID PROJECT

PROPOSED PAVEMENT MARKING LEGEND

1. MODIFIED URETHANE PAVEMENT MARKING - LINE 4" - WHITE, 30' SKIP - 10' DASH
2. MODIFIED URETHANE PAVEMENT MARKING - LINE 4" - SOLID WHITE
3. MODIFIED URETHANE PAVEMENT MARKING - LINE 4" - SOLID YELLOW
4. MODIFIED URETHANE PAVEMENT MARKING - LINE 6" - SOLID WHITE
5. MODIFIED URETHANE PAVEMENT MARKING - LINE 8" - WHITE, 6' SKIP - 2' DASH
6. MODIFIED URETHANE PAVEMENT MARKING - LINE 8" - SOLID WHITE
7. MODIFIED URETHANE PAVEMENT MARKING - LINE 8" - SOLID YELLOW
8. MODIFIED URETHANE PAVEMENT MARKING - LINE 12" - SOLID WHITE
9. MODIFIED URETHANE PAVEMENT MARKING - LINE 12" - SOLID YELLOW
10. MODIFIED URETHANE PAVEMENT MARKING - LINE 24" - SOLID WHITE; STOP BAR
11. MODIFIED URETHANE PAVEMENT MARKING - LETTERS AND SYMBOLS - SOLID WHITE; LARGE TURN ARROWS

NOTE: PROPOSED RAISED PAVEMENT MARKERS ARE NOT SHOWN ON PLAN SHEETS, BUT TO BE INSTALLED PER HIGHWAY STD 781001 = 1 @ 80' CTS ON EB & WB CENTERLINES; 1 @ 40' CTS ON SOLID TURN LANE LINES; 1 @ 20' CTS ON OUTSIDE RAMP EDGE LINES; 1 @ 40' CTS ON EDGE LINES OF RAMP GORE AREAS.

MODEL: US24 Plan 4
FILE NAME: pw://bfwms-pw.bentley.com:bfwms-pw01/Documents/BFW/PROJECTS/2025 PROJECTS/25330 - IDOT D4 PTB 213-039 WO#6 US 24/25330/IDOT/CAD_Sheets/D468F92-sht-4Plan.dgn

BFW™ ENGINEERING & CONSULTING

USER NAME = sskinner	DESIGNED -	REVISED -	
	DRAWN -	REVISED -	
PLOT SCALE = 0.16666633 ' / in.	CHECKED -	REVISED -	
PLOT DATE = 10/16/2025	DATE -	REVISED -	

STATE OF ILLINOIS
DEPARTMENT OF TRANSPORTATION

PLAN
US 24

SCALE: 1"=50' | SHEET 4 OF 13 SHEETS | STA. 379+00.00 TO STA. 394+00.00

F.A.P. RTE.	SECTION	COUNTY	TOTAL SHEETS	SHEET NO.
317	17(RS-6,TS-2);18(RS,TS)-2	TAZEWELL	85	47
		CONTRACT NO. 68F92		
		ILLINOIS	FED. AID PROJECT	

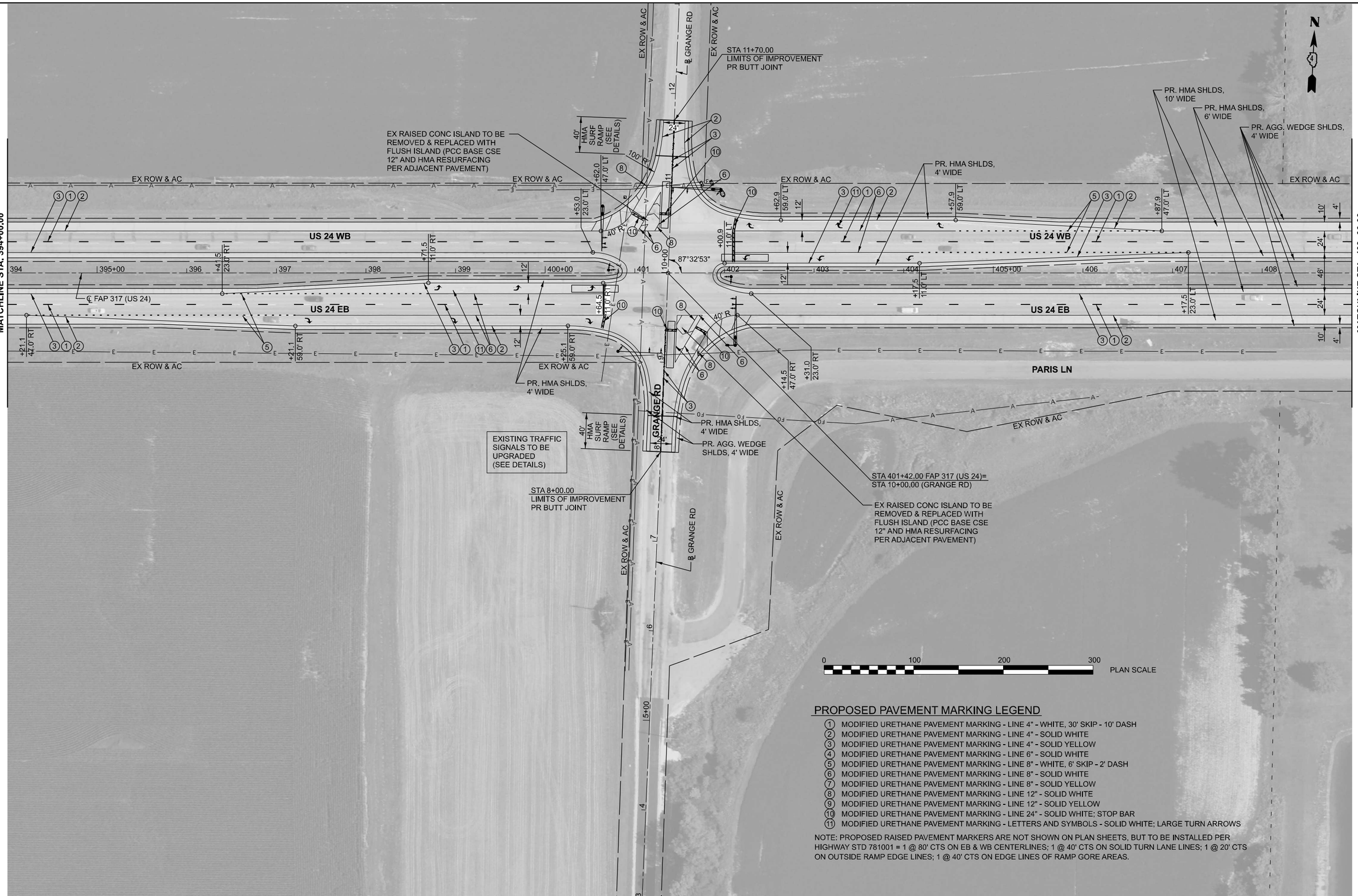

PROPOSED PAVEMENT MARKING LEGEND

1. MODIFIED URETHANE PAVEMENT MARKING - LINE 4" - WHITE, 30' SKIP - 10' DASH
2. MODIFIED URETHANE PAVEMENT MARKING - LINE 4" - SOLID WHITE
3. MODIFIED URETHANE PAVEMENT MARKING - LINE 4" - SOLID YELLOW
4. MODIFIED URETHANE PAVEMENT MARKING - LINE 6" - SOLID WHITE
5. MODIFIED URETHANE PAVEMENT MARKING - LINE 8" - WHITE, 6' SKIP - 2' DASH
6. MODIFIED URETHANE PAVEMENT MARKING - LINE 8" - SOLID WHITE
7. MODIFIED URETHANE PAVEMENT MARKING - LINE 8" - SOLID YELLOW
8. MODIFIED URETHANE PAVEMENT MARKING - LINE 12" - SOLID WHITE
9. MODIFIED URETHANE PAVEMENT MARKING - LINE 12" - SOLID YELLOW
10. MODIFIED URETHANE PAVEMENT MARKING - LINE 24" - SOLID WHITE; STOP BAR
11. MODIFIED URETHANE PAVEMENT MARKING - LETTERS AND SYMBOLS - SOLID WHITE; LARGE TURN ARROWS

NOTE: PROPOSED RAISED PAVEMENT MARKERS ARE NOT SHOWN ON PLAN SHEETS, BUT TO BE INSTALLED PER HIGHWAY STD 781001 = 1 @ 80' CTS ON EB & WB CENTERLINES; 1 @ 40' CTS ON SOLID TURN LANE LINES; 1 @ 20' CTS ON OUTSIDE RAMP EDGE LINES; 1 @ 40' CTS ON EDGE LINES OF RAMP GORE AREAS.

MODEL: US24 Plan 5
FILE NAME: pw://bfwms-pw.bentley.com:bfwms-pw-01/Documents/BFW/PROJECTS/2025 PROJECTS/25330 - IDOT D4 PTB 213-039 WO#6 US 24/25330IDOT/CAD_Sheets/D468F92-sht-Plan.dgn

BFW™ ENGINEERING & CONSULTING

USER NAME = sskinner	DESIGNED -	REVISED -	
	DRAWN -	REVISED -	
PLOT SCALE = 0.16666633 ' / in.	CHECKED -	REVISED -	
PLOT DATE = 10/16/2025	DATE -	REVISED -	

STATE OF ILLINOIS
DEPARTMENT OF TRANSPORTATION

PLAN
US 24

SCALE: 1"=50' | SHEET 5 OF 13 SHEETS | STA. 394+00.00 TO STA. 409+00.00

F.A.P. RTE.	SECTION	COUNTY	TOTAL SHEETS	SHEET NO.
317	17(RS-6,TS-2);18(RS,TS)-2	TAZEWELL	85	48

CONTRACT NO. 68F92

ILLINOIS | FED. AID PROJECT

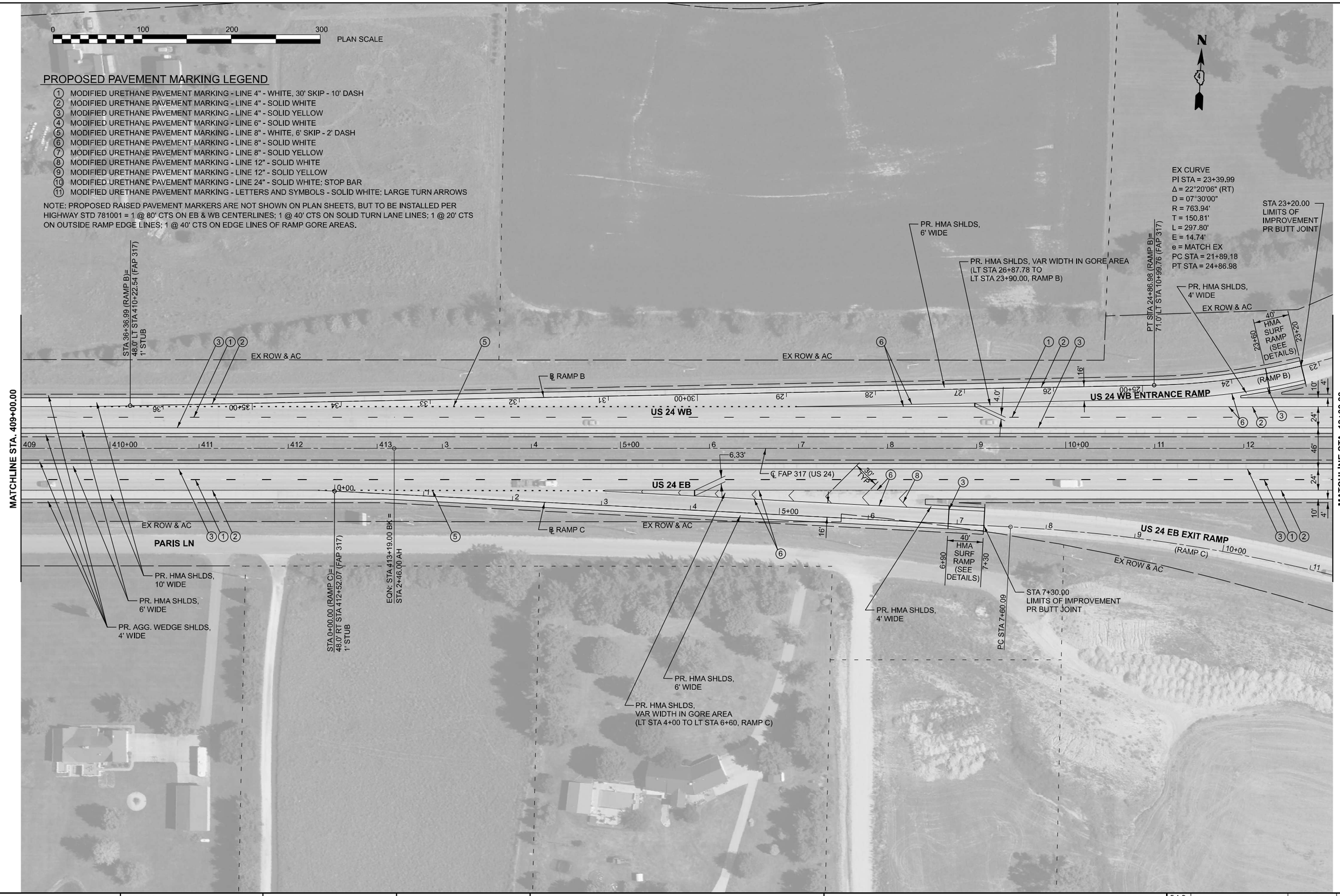

MODEL: US24 Plan 6
FILE NAME: pw://bfwms-pw.bentley.com:bfwms-pw-01/Documents/BFW/PROJECTS/2025 PROJECTS/25330 - IDOT D4 PTB 213-039 WO#6 US 24/25330/IDOT/CAD_Sheets/D468F92-sht-Plan.dgn

BFW™ ENGINEERING & CONSULTING

USER NAME = sskinner	DESIGNED -	REVISED -	
	DRAWN -	REVISED -	
PLOT SCALE = 0.16666633 ' / in.	CHECKED -	REVISED -	
PLOT DATE = 10/16/2025	DATE -	REVISED -	

STATE OF ILLINOIS
DEPARTMENT OF TRANSPORTATION

PLAN
US 24

SCALE: 1"=50' | SHEET 6 OF 13 SHEETS | STA. 409+00.00 TO STA. 13+00.00 R2

F.A.P. RTE.	SECTION	COUNTY	TOTAL SHEETS	SHEET NO.
317	17(RS-6,TS-2);18(RS,TS)-2	TAZEWELL	85	49

CONTRACT NO. 68F92

ILLINOIS | FED. AID PROJECT

PROPOSED PAVEMENT MARKING LEGEND

1. MODIFIED URETHANE PAVEMENT MARKING - LINE 4" - WHITE, 30' SKIP - 10' DASH
2. MODIFIED URETHANE PAVEMENT MARKING - LINE 4" - SOLID WHITE
3. MODIFIED URETHANE PAVEMENT MARKING - LINE 4" - SOLID YELLOW
4. MODIFIED URETHANE PAVEMENT MARKING - LINE 6" - SOLID WHITE
5. MODIFIED URETHANE PAVEMENT MARKING - LINE 8" - WHITE, 6' SKIP - 2' DASH
6. MODIFIED URETHANE PAVEMENT MARKING - LINE 8" - SOLID WHITE
7. MODIFIED URETHANE PAVEMENT MARKING - LINE 8" - SOLID YELLOW
8. MODIFIED URETHANE PAVEMENT MARKING - LINE 12" - SOLID WHITE
9. MODIFIED URETHANE PAVEMENT MARKING - LINE 12" - SOLID YELLOW
10. MODIFIED URETHANE PAVEMENT MARKING - LINE 24" - SOLID WHITE; STOP BAR
11. MODIFIED URETHANE PAVEMENT MARKING - LETTERS AND SYMBOLS - SOLID WHITE; LARGE TURN ARROWS

NOTE: PROPOSED RAISED PAVEMENT MARKERS ARE NOT SHOWN ON PLAN SHEETS, BUT TO BE INSTALLED PER HIGHWAY STD 781001 = 1 @ 80' CTS ON EB & WB CENTERLINES; 1 @ 40' CTS ON SOLID TURN LANE LINES; 1 @ 20' CTS ON OUTSIDE RAMP EDGE LINES; 1 @ 40' CTS ON EDGE LINES OF RAMP GORE AREAS.

MODEL: US24 Plan 7
FILE NAME: pw://bfwms-pw.bentley.com:bfwms-pw01/Documents/BFW/PROJECTS/2025 PROJECTS/23330 - IDOT D4 PTB 213-039 WO#6 US 24/23330/IDOT/CAD Sheets/D468F92-sht-Plan.dgn

BFW ENGINEERING & CONSULTING

USER NAME = sskinner	DESIGNED -	REVISED -	
	DRAWN -	REVISED -	
PLOT SCALE = 0.16666633 ' / in.	CHECKED -	REVISED -	
PLOT DATE = 10/16/2025	DATE -	REVISED -	

STATE OF ILLINOIS
DEPARTMENT OF TRANSPORTATION

PLAN
US 24

SCALE: 1"=50' | SHEET 7 OF 13 SHEETS | STA. 13+00.00 R2 TO STA. 27+00.00 R2

F.A.P. RTE.	SECTION	COUNTY	TOTAL SHEETS	SHEET NO.
317	17(RS-6,TS-2);18(RS,TS)-2	TAZEWELL	85	50

CONTRACT NO. 68F92
ILLINOIS | FED. AID PROJECT

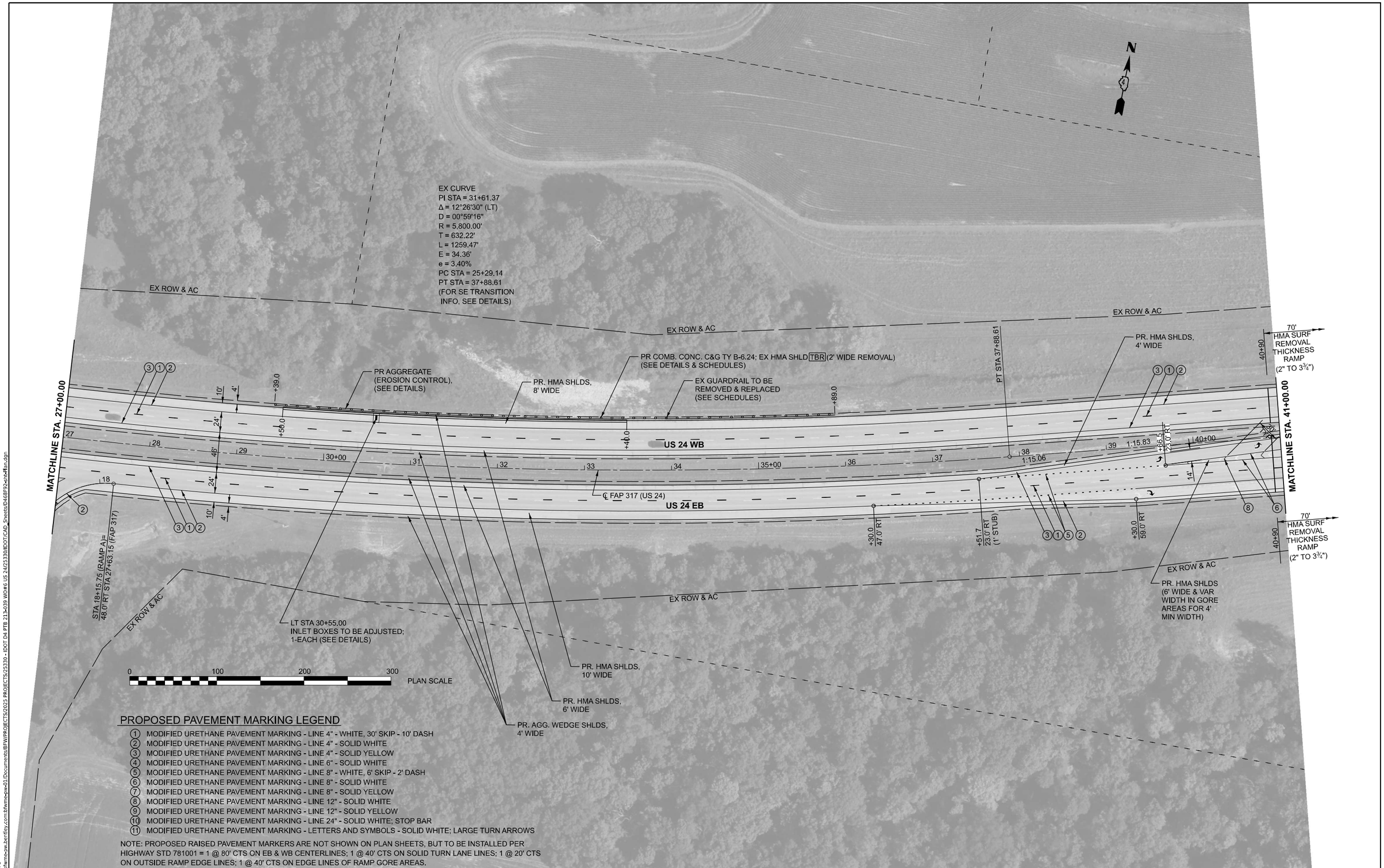

PROPOSED PAVEMENT MARKING LEGEND

1. MODIFIED URETHANE PAVEMENT MARKING - LINE 4" - WHITE, 30' SKIP - 10' DASH
2. MODIFIED URETHANE PAVEMENT MARKING - LINE 4" - SOLID WHITE
3. MODIFIED URETHANE PAVEMENT MARKING - LINE 4" - SOLID YELLOW
4. MODIFIED URETHANE PAVEMENT MARKING - LINE 6" - SOLID WHITE
5. MODIFIED URETHANE PAVEMENT MARKING - LINE 8" - WHITE, 6' SKIP - 2' DASH
6. MODIFIED URETHANE PAVEMENT MARKING - LINE 8" - SOLID WHITE
7. MODIFIED URETHANE PAVEMENT MARKING - LINE 8" - SOLID YELLOW
8. MODIFIED URETHANE PAVEMENT MARKING - LINE 12" - SOLID WHITE
9. MODIFIED URETHANE PAVEMENT MARKING - LINE 12" - SOLID YELLOW
10. MODIFIED URETHANE PAVEMENT MARKING - LINE 24" - SOLID WHITE; STOP BAR
11. MODIFIED URETHANE PAVEMENT MARKING - LETTERS AND SYMBOLS - SOLID WHITE; LARGE TURN ARROWS

NOTE: PROPOSED RAISED PAVEMENT MARKERS ARE NOT SHOWN ON PLAN SHEETS, BUT TO BE INSTALLED PER HIGHWAY STD 781001 = 1 @ 80' CTS ON EB & WB CENTERLINES; 1 @ 40' CTS ON SOLID TURN LANE LINES; 1 @ 20' CTS ON OUTSIDE RAMP EDGE LINES; 1 @ 40' CTS ON EDGE LINES OF RAMP GORE AREAS.

MODEL: US24 Plan 8
FILE NAME: pw://bfwms-pw.bentley.com:bfwms-pw-01/Documents/BFW/PROJECTS/2025 PROJECTS/25330 - IDOT D4 PTB 213-039 WO#6 US 24/25330/IDOT/CAD_Sheets/D468F92-sht-Plan.dgn

BFW ENGINEERING & CONSULTING

USER NAME = sskinner	DESIGNED -	REVISED -	
	DRAWN -	REVISED -	
PLOT SCALE = 0.16666633 ' / in.	CHECKED -	REVISED -	
PLOT DATE = 10/16/2025	DATE -	REVISED -	

STATE OF ILLINOIS
DEPARTMENT OF TRANSPORTATION

PLAN
US 24

SCALE: 1"=50' | SHEET 8 OF 13 SHEETS | STA. 27+00.00 R2 TO STA. 41+00.00 R2

F.A.P. RTE.	SECTION	COUNTY	TOTAL SHEETS	SHEET NO.
317	17(RS-6,TS-2);18(RS,TS)-2	TAZEWELL	85	51
		CONTRACT NO. 68F92		
		ILLINOIS	FED. AID PROJECT	

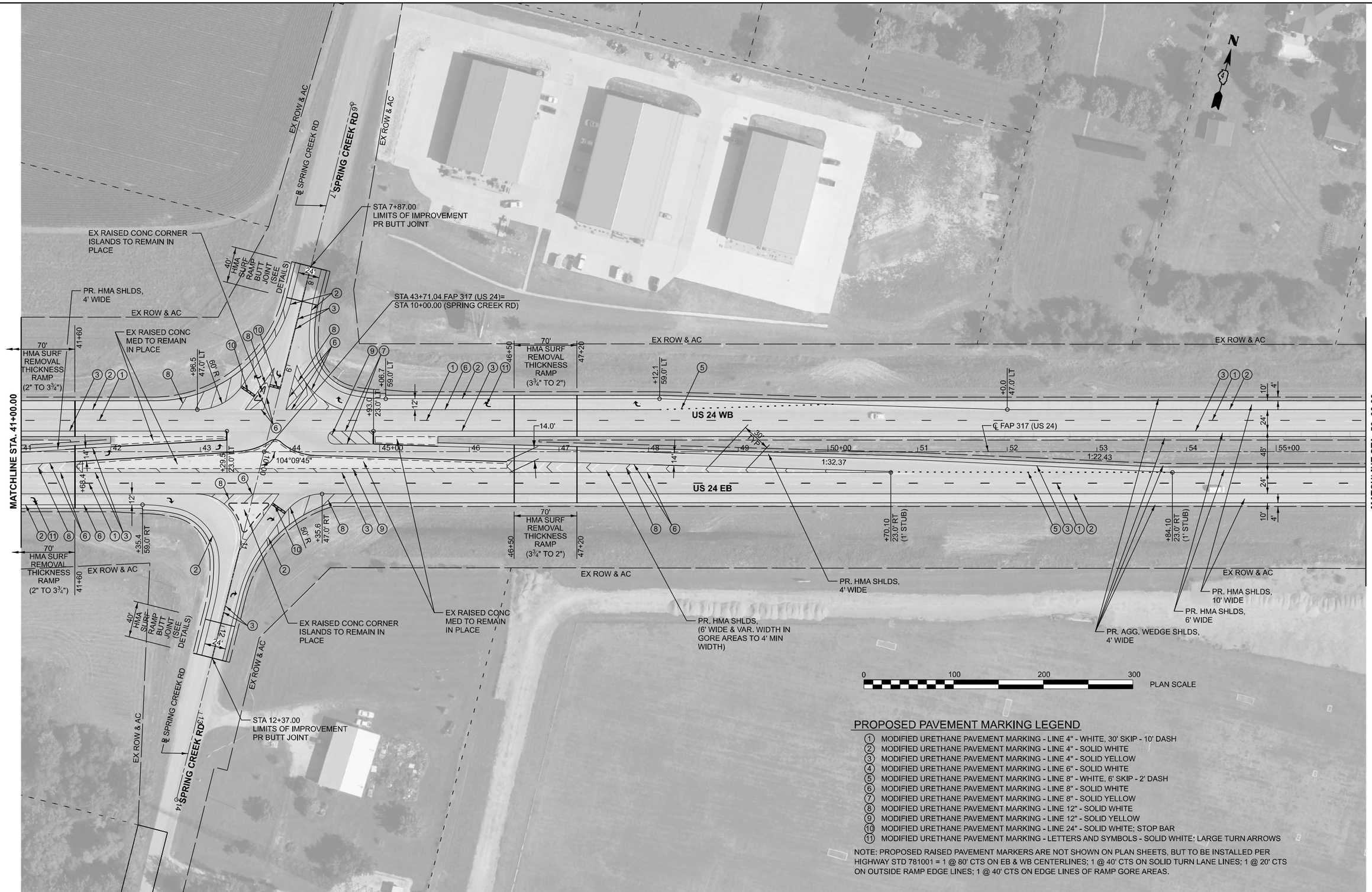

PROPOSED PAVEMENT MARKING LEGEND

1. MODIFIED URETHANE PAVEMENT MARKING - LINE 4" - WHITE, 30' SKIP - 10' DASH
2. MODIFIED URETHANE PAVEMENT MARKING - LINE 4" - SOLID WHITE
3. MODIFIED URETHANE PAVEMENT MARKING - LINE 4" - SOLID YELLOW
4. MODIFIED URETHANE PAVEMENT MARKING - LINE 6" - SOLID WHITE
5. MODIFIED URETHANE PAVEMENT MARKING - LINE 8" - WHITE, 6' SKIP - 2' DASH
6. MODIFIED URETHANE PAVEMENT MARKING - LINE 8" - SOLID WHITE
7. MODIFIED URETHANE PAVEMENT MARKING - LINE 8" - SOLID YELLOW
8. MODIFIED URETHANE PAVEMENT MARKING - LINE 12" - SOLID WHITE
9. MODIFIED URETHANE PAVEMENT MARKING - LINE 12" - SOLID YELLOW
10. MODIFIED URETHANE PAVEMENT MARKING - LINE 24" - SOLID WHITE; STOP BAR
11. MODIFIED URETHANE PAVEMENT MARKING - LETTERS AND SYMBOLS - SOLID WHITE; LARGE TURN ARROWS

NOTE: PROPOSED RAISED PAVEMENT MARKERS ARE NOT SHOWN ON PLAN SHEETS, BUT TO BE INSTALLED PER HIGHWAY STD 781001 = 1 @ 80' CTS ON EB & WB CENTERLINES; 1 @ 40' CTS ON SOLID TURN LANE LINES; 1 @ 20' CTS ON OUTSIDE RAMP EDGE LINES; 1 @ 40' CTS ON EDGE LINES OF RAMP GORE AREAS.

MODEL: US24 Plan 9
FILE NAME: pw://bfwmc-pw.bentley.com:bfwmc-pw01/Documents/BFW/PROJECTS/2023 PROJECTS/23330 - IDOT D4 PTB 213-039 WO#6 US 24/23330/IDOT/CAD_Sheets/D468F92-sht-Plan.dgn

BFW™ ENGINEERING & CONSULTING

USER NAME = sskinner	DESIGNED -	REVISED -	
	DRAWN -	REVISED -	
PLOT SCALE = 0.16666633 ' / in.	CHECKED -	REVISED -	
PLOT DATE = 10/16/2025	DATE -	REVISED -	

STATE OF ILLINOIS
DEPARTMENT OF TRANSPORTATION

PLAN
US 24

SCALE: 1"=50' | SHEET 9 OF 13 SHEETS | STA. 41+00.00 R2 TO STA. 56+00.00 R2

F.A.P. RTE.	SECTION	COUNTY	TOTAL SHEETS	SHEET NO.
317	17(RS-6,TS-2);18(RS,TS)-2	TAZEWELL	85	52
		CONTRACT NO. 68F92		
		ILLINOIS FED. AID PROJECT		

PROPOSED PAVEMENT MARKING LEGEND

1. MODIFIED URETHANE PAVEMENT MARKING - LINE 4" - WHITE, 30' SKIP - 10' DASH
2. MODIFIED URETHANE PAVEMENT MARKING - LINE 4" - SOLID WHITE
3. MODIFIED URETHANE PAVEMENT MARKING - LINE 4" - SOLID YELLOW
4. MODIFIED URETHANE PAVEMENT MARKING - LINE 6" - SOLID WHITE
5. MODIFIED URETHANE PAVEMENT MARKING - LINE 8" - WHITE, 6' SKIP - 2' DASH
6. MODIFIED URETHANE PAVEMENT MARKING - LINE 8" - SOLID WHITE
7. MODIFIED URETHANE PAVEMENT MARKING - LINE 8" - SOLID YELLOW
8. MODIFIED URETHANE PAVEMENT MARKING - LINE 12" - SOLID WHITE
9. MODIFIED URETHANE PAVEMENT MARKING - LINE 12" - SOLID YELLOW
10. MODIFIED URETHANE PAVEMENT MARKING - LINE 24" - SOLID WHITE; STOP BAR
11. MODIFIED URETHANE PAVEMENT MARKING - LETTERS AND SYMBOLS - SOLID WHITE; LARGE TURN ARROWS

NOTE: PROPOSED RAISED PAVEMENT MARKERS ARE NOT SHOWN ON PLAN SHEETS, BUT TO BE INSTALLED PER HIGHWAY STD 781001 = 1 @ 80' CTS ON EB & WB CENTERLINES; 1 @ 40' CTS ON SOLID TURN LANE LINES; 1 @ 20' CTS ON OUTSIDE RAMP EDGE LINES; 1 @ 40' CTS ON EDGE LINES OF RAMP GORE AREAS.

MODEL: US24 Plan 10
FILE NAME: pw://bfwms-pw.bentley.com:bfwms-pw01/Documents/BFW/PROJECTS/2025 PROJECTS/25330 - IDOT D4 PTB 213-039 WO#6 US 24/25330/IDOT/CAD_Sheets/068F92-sht-4Plan.dgn

BFW™ ENGINEERING & CONSULTING

USER NAME = sskinner	DESIGNED -	REVISED -
	DRAWN -	REVISED -
PLOT SCALE = 0.16666633 ' / in.	CHECKED -	REVISED -
PLOT DATE = 10/16/2025	DATE -	REVISED -

STATE OF ILLINOIS
DEPARTMENT OF TRANSPORTATION

PLAN
US 24

SCALE: 1"=50' | SHEET 10 OF 13 SHEETS | STA. 56+00.00 R2 TO STA. 71+00.00 R2

F.A.P. RTE.	SECTION	COUNTY	TOTAL SHEETS	SHEET NO.
317	17(RS-6,TS-2);18(RS,TS)-2	TAZEWELL	85	53
		CONTRACT NO. 68F92		
		ILLINOIS	FED. AID PROJECT	

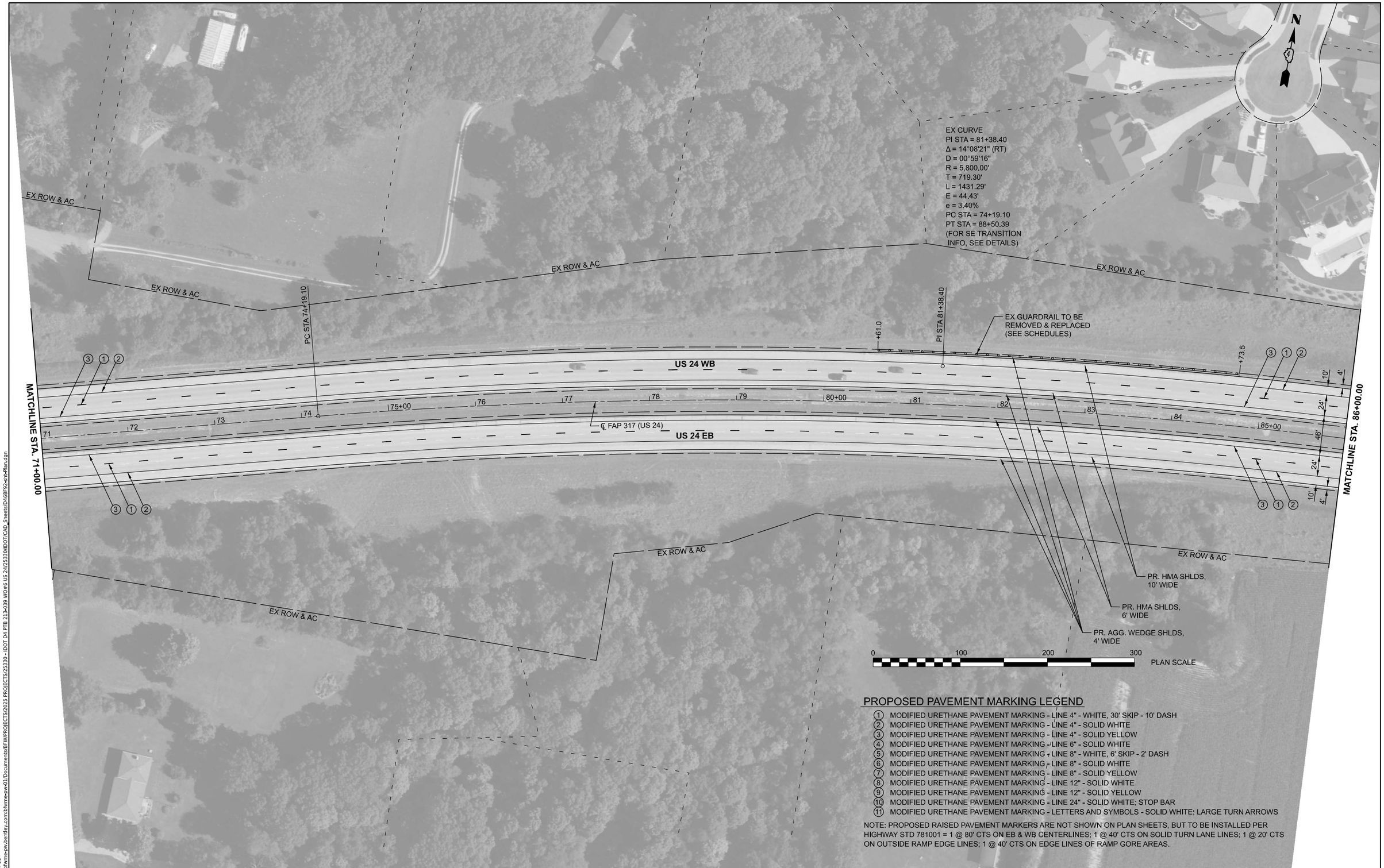

PROPOSED PAVEMENT MARKING LEGEND

1. MODIFIED URETHANE PAVEMENT MARKING - LINE 4" - WHITE, 30' SKIP - 10' DASH
2. MODIFIED URETHANE PAVEMENT MARKING - LINE 4" - SOLID WHITE
3. MODIFIED URETHANE PAVEMENT MARKING - LINE 4" - SOLID YELLOW
4. MODIFIED URETHANE PAVEMENT MARKING - LINE 6" - SOLID WHITE
5. MODIFIED URETHANE PAVEMENT MARKING - LINE 8" - WHITE, 6' SKIP - 2' DASH
6. MODIFIED URETHANE PAVEMENT MARKING - LINE 8" - SOLID WHITE
7. MODIFIED URETHANE PAVEMENT MARKING - LINE 8" - SOLID YELLOW
8. MODIFIED URETHANE PAVEMENT MARKING - LINE 12" - SOLID WHITE
9. MODIFIED URETHANE PAVEMENT MARKING - LINE 12" - SOLID YELLOW
10. MODIFIED URETHANE PAVEMENT MARKING - LINE 24" - SOLID WHITE; STOP BAR
11. MODIFIED URETHANE PAVEMENT MARKING - LETTERS AND SYMBOLS - SOLID WHITE; LARGE TURN ARROWS

NOTE: PROPOSED RAISED PAVEMENT MARKERS ARE NOT SHOWN ON PLAN SHEETS, BUT TO BE INSTALLED PER HIGHWAY STD 781001 = 1 @ 80' CTS ON EB & WB CENTERLINES; 1 @ 40' CTS ON SOLID TURN LANE LINES; 1 @ 20' CTS ON OUTSIDE RAMP EDGE LINES; 1 @ 40' CTS ON EDGE LINES OF RAMP GORE AREAS.

MODEL: US24 Plan 11
FILE NAME: pw://bwm-pw.bentley.com:bfwm-pw-01/Documents/BFW/PROJECTS/2025 PROJECTS/23330 - IDOT D4 PTB 213-039 WO#6 US 24/23330/IDOT/CAD_Sheets/D468F92-sht-Plan.dgn

BFW™ ENGINEERING & CONSULTING

USER NAME = sskinner	DESIGNED -	REVISED -	
	DRAWN -	REVISED -	
PLOT SCALE = 0.16666633 ' / in.	CHECKED -	REVISED -	
PLOT DATE = 10/16/2025	DATE -	REVISED -	

STATE OF ILLINOIS
DEPARTMENT OF TRANSPORTATION

PLAN
US 24

SCALE: 1"=50' | SHEET 11 OF 13 SHEETS | STA. 71+00.00 R2 TO STA. 86+00.00 R2

F.A.P. RTE.	SECTION	COUNTY	TOTAL SHEETS	SHEET NO.
317	17(RS-6,TS-2);18(RS,TS)-2	TAZEWELL	85	54
		CONTRACT NO. 68F92		
		ILLINOIS FED. AID PROJECT		

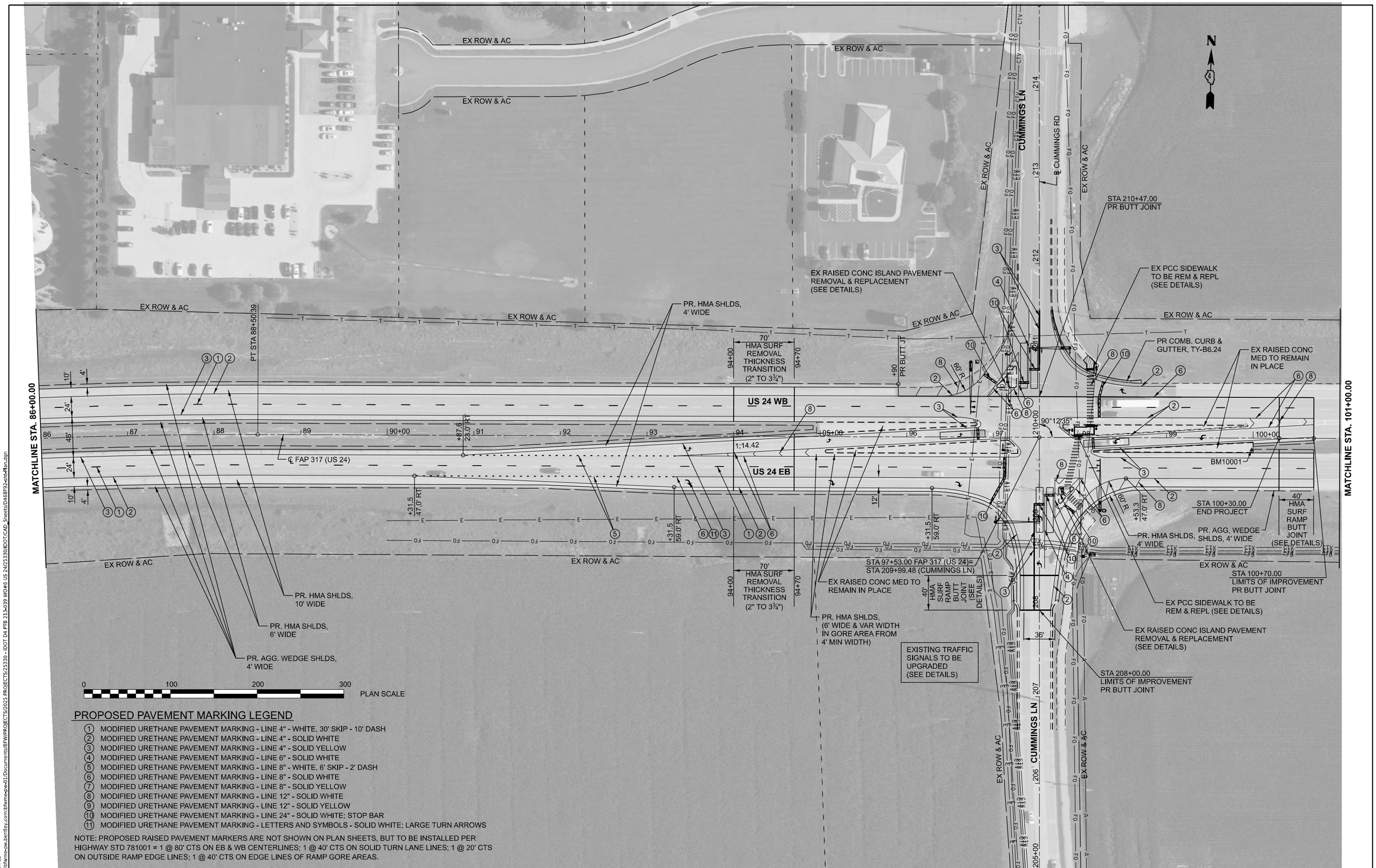

PROPOSED PAVEMENT MARKING LEGEND

① MODIFIED URETHANE PAVEMENT MARKING - LINE 4" - WHITE, 30' SKIP - 10' DASH
② MODIFIED URETHANE PAVEMENT MARKING - LINE 4" - SOLID WHITE
③ MODIFIED URETHANE PAVEMENT MARKING - LINE 4" - SOLID YELLOW
④ MODIFIED URETHANE PAVEMENT MARKING - LINE 6" - SOLID WHITE
⑤ MODIFIED URETHANE PAVEMENT MARKING - LINE 8" - WHITE, 6' SKIP - 2' DASH
⑥ MODIFIED URETHANE PAVEMENT MARKING - LINE 8" - SOLID WHITE
⑦ MODIFIED URETHANE PAVEMENT MARKING - LINE 8" - SOLID YELLOW
⑧ MODIFIED URETHANE PAVEMENT MARKING - LINE 12" - SOLID WHITE
⑨ MODIFIED URETHANE PAVEMENT MARKING - LINE 12" - SOLID YELLOW
⑩ MODIFIED URETHANE PAVEMENT MARKING - LINE 24" - SOLID WHITE; STOP BAR
⑪ MODIFIED URETHANE PAVEMENT MARKING - LETTERS AND SYMBOLS - SOLID WHITE; LARGE TURN ARROWS

NOTE: PROPOSED RAISED PAVEMENT MARKERS ARE NOT SHOWN ON PLAN SHEETS, BUT TO BE INSTALLED PER HIGHWAY STD 781001 = 1 @ 80' CTS ON EB & WB CENTERLINES; 1 @ 40' CTS ON SOLID TURN LANE LINES; 1 @ 20' CTS ON OUTSIDE RAMP EDGE LINES; 1 @ 40' CTS ON EDGE LINES OF RAMP GORE AREAS.

MODEL: US24 Plan 12
FILE NAME: pw://bfwme-pw.bentley.com:bfwme-pw-01/Documents/BFW/PROJECTS/2025 PROJECTS/25330 - IDOT D4 PTB 213-039 WO#6 US 24/25330/IDOT/CAD_Sheets/D468F92-sht-Plan.dgn

BFW ENGINEERING & CONSULTING

USER NAME = sskinner	DESIGNED -	REVISED -	
	DRAWN -	REVISED -	
PLOT SCALE = 0.16666633 ' / in.	CHECKED -	REVISED -	
PLOT DATE = 10/16/2025	DATE -	REVISED -	

STATE OF ILLINOIS
DEPARTMENT OF TRANSPORTATION

PLAN
US 24

SCALE: 1"=50' SHEET 12 OF 13 SHEETS STA. 86+00.00 R2 TO STA. 101+00.00 R2

F.A.P. RTE.	SECTION	COUNTY	TOTAL SHEETS	SHEET NO.
317	17(RS-6,TS-2);18(RS,TS)-2	TAZEWELL	85	55

CONTRACT NO. 68F92
ILLINOIS FED. AID PROJECT

MODEL: US24 Plan 13
FILE NAME: pw://bfwms-pw.bentley.com:bfwms-pw-01/Documents/BFW/PROJECTS/2025 PROJECTS/23330 - IDOT D4 PTB 213-039 WO#6 US 24/23330/IDOT/CAD_Sheets/D468F92-int-Plan.dgn

BFW™ ENGINEERING & CONSULTING

USER NAME = sskinner	DESIGNED -	REVISED -
	DRAWN -	REVISED -
PLOT SCALE = 0.16666633 ' / in.	CHECKED -	REVISED -
PLOT DATE = 10/16/2025	DATE -	REVISED -

STATE OF ILLINOIS
DEPARTMENT OF TRANSPORTATION

PLAN
US 24

SCALE: 1"=50' | SHEET 13 OF 13 SHEETS | STA. 101+00.00 R2 TO STA. 116+00.00 R2

F.A.P. RTE.	SECTION	COUNTY	TOTAL SHEETS	SHEET NO.
317	17(RS-6,TS-2);18(RS,TS)-2	TAZEWELL	85	56
		CONTRACT NO. 68F92		
	ILLINOIS	FED. AID PROJECT		

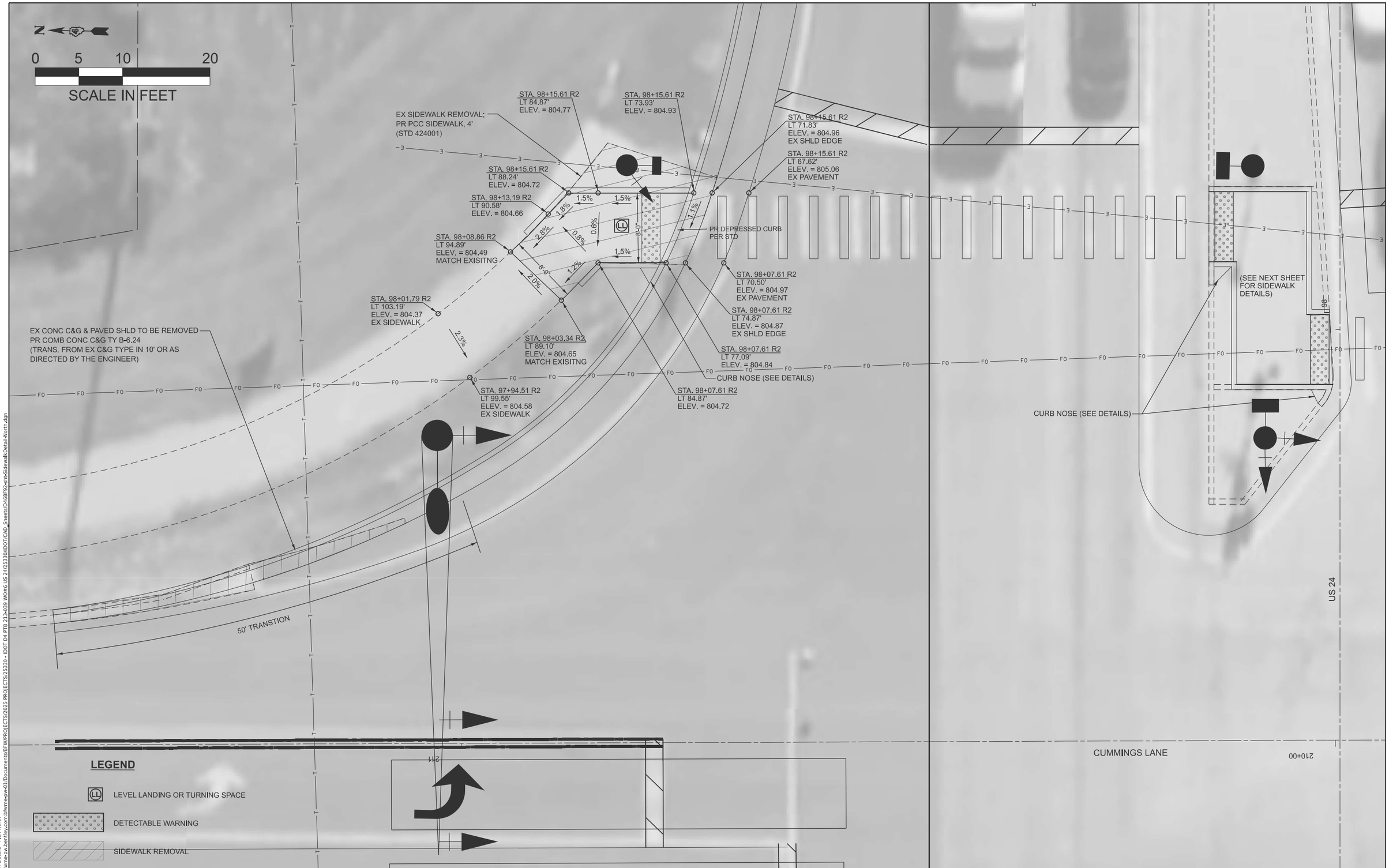

MODEL: Intersection Details - Plan North
FILE NAME: pw://bfwms-pw.bentley.com:bfwms-pw-01/Documents/BFW/PROJECTS/2025 PROJECTS/25330 - IDOT D4 PTB 213-039 WO#6 US 24/25330/IDOT/CAD_Sheets/D468F92-ehSidewalk-Detail-North.dgn

BFW ENGINEERING & CONSULTING	USER NAME = twilliams1	DESIGNED -	REVISED -	STATE OF ILLINOIS DEPARTMENT OF TRANSPORTATION	NORTH SIDEWALK DETAIL US 24
		DRAWN -	REVISED -		
	PLOT SCALE = $SCALE$	CHECKED -	REVISED -		
	PLOT DATE = 10/16/2025	DATE -	REVISED -		SCALE: 1"=5' SHEET 1 OF 2 SHEETS STA. 97+00.00 R2 TO STA. 100+00.00 R2

F.A.P. RTE.	SECTION	COUNTY	TOTAL SHEETS	SHEET NO.
317	17(RS-6,TS-2);18(RS,TS)-2	TAZEWELL	85	57
		CONTRACT NO. 68F92		
	ILLINOIS	FED. AID PROJECT		

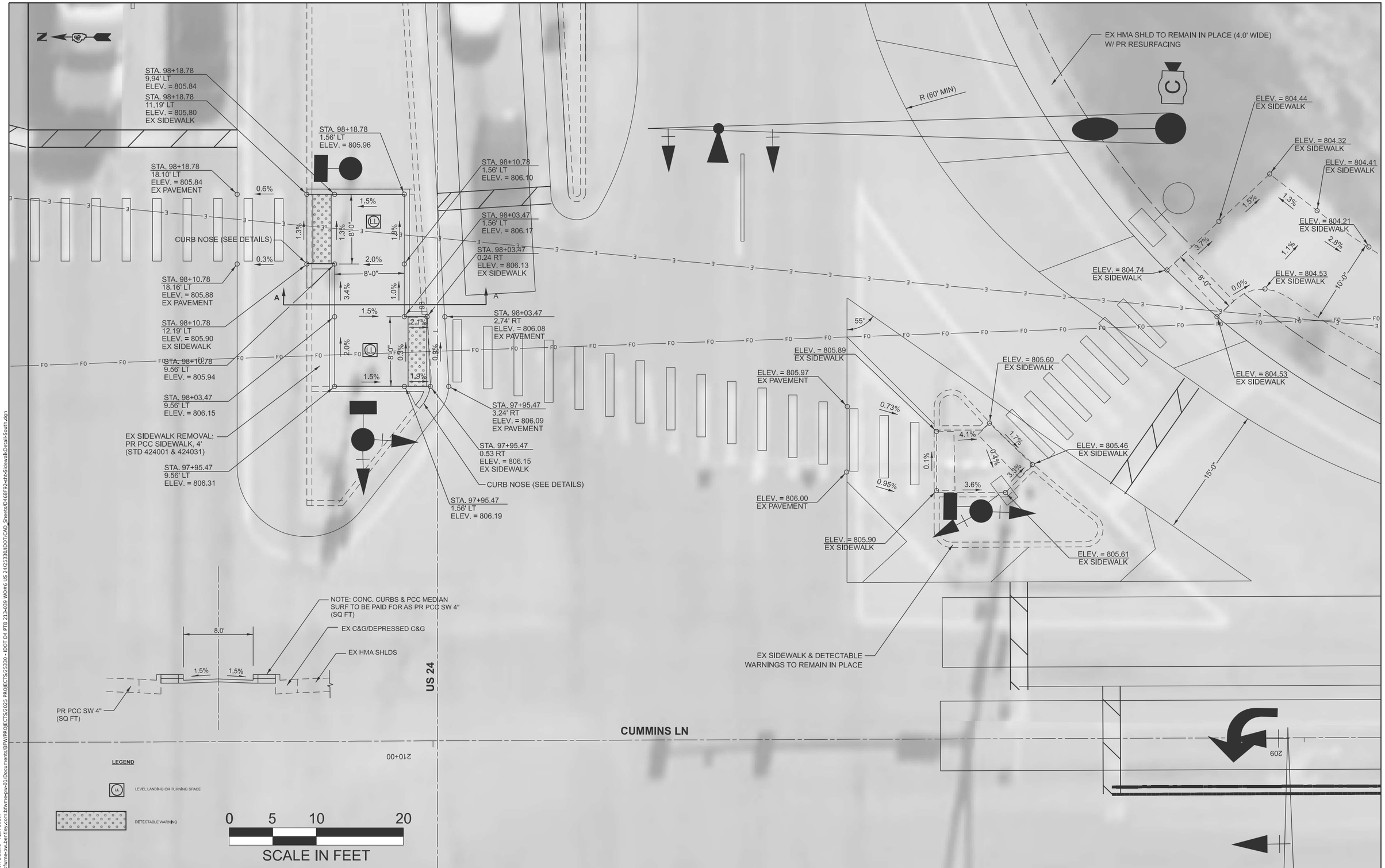

MODEL: Intersection Details - Plan South
FILE NAME: pw://bfwms-pw.bentley.com:bfwms-pw-01/Documents/BFW/PROJECTS/2025 PROJECTS/25330 - IDOT D4 PTB 213-039 WO#6 US 24/25330/IDOT/CAD_Sheets/D468F92-ehSidewalk-Detail-South.dgn

BFW ENGINEERING & CONSULTING

USER NAME = twilliams1	DESIGNED -	REVISED -	
	DRAWN -	REVISED -	
PLOT SCALE = $SCALE$	CHECKED -	REVISED -	
PLOT DATE = 10/16/2025	DATE -	REVISED -	

STATE OF ILLINOIS
DEPARTMENT OF TRANSPORTATION

SIDEWALK DETAIL SOUTH
US 24

SCALE: 1"=5' | SHEET 2 OF 2 SHEETS | STA. 97+00.00 R2 TO STA. 100+00.00 R2

F.A.P. RTE.	SECTION	COUNTY	TOTAL SHEETS	SHEET NO.
317	17(RS-6,TS-2);18(RS,TS)-2	TAZEWELL	85	58
		CONTRACT NO. 68F92		
	ILLINOIS	FED. AID PROJECT		

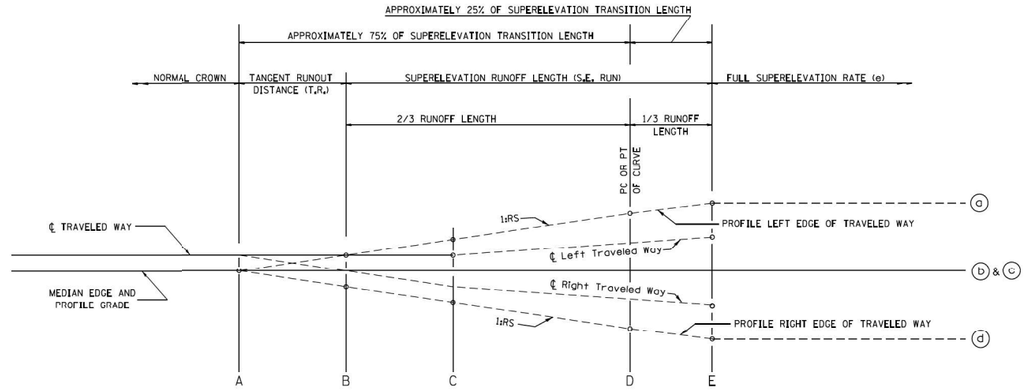

TYPICAL PROFILE - S.E. TRANSITION

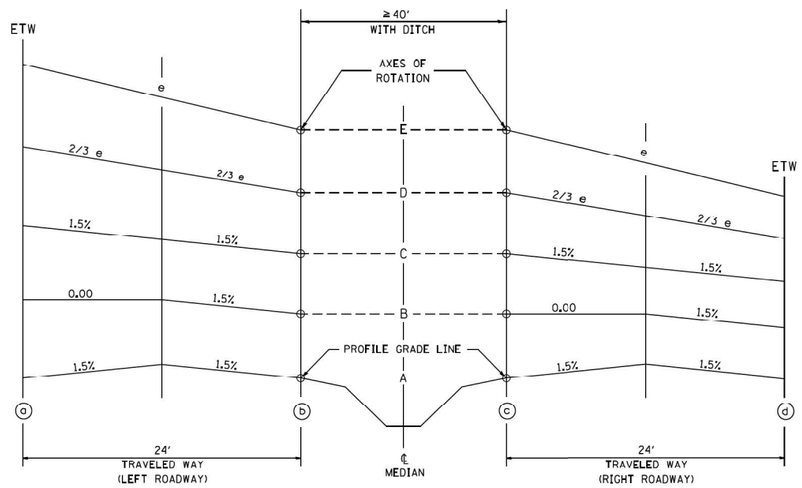

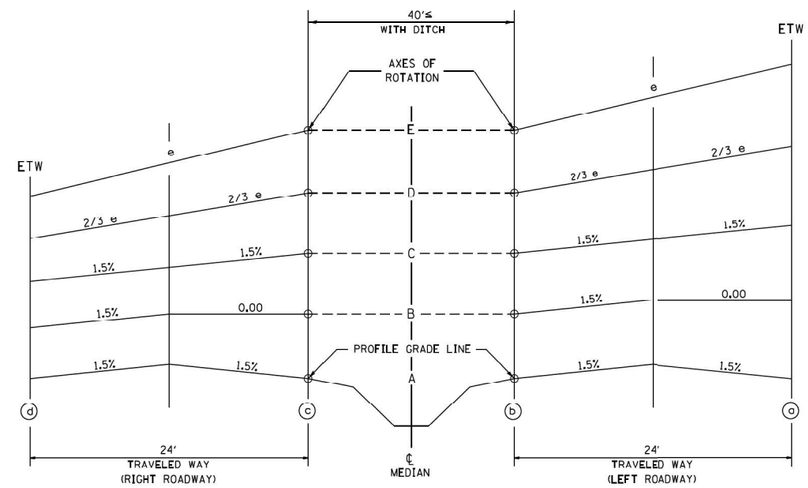

MAINLINE - FOUR-LANE DIVIDED HIGHWAY
TABLE OF SUPERELEVATION BREAK POINT LOCATIONS

CURVE NO.	e	DESIGN SPEED	L_{ML} (FOOT)	TR_{ML} (FOOT)	A	B	C	D (PC/PT)	E	TRANSITION
US 24 (PI 31+61.37)	3.40%	70 MPH	153	64.95	23+62.19	24+27.14	24+92.09	25+29.14	25+80.14	TRANS IN (NC TO 3.40%)
					39+55.56	38+90.61	38+25.66	37+88.61	37+37.61	TRANS OUT (3.40% TO NC)

Note: PGL for EB & WB Lanes is at the Median Edges of Pavement; therefore, treat SE Transition the same as for a normal four-lane roadway

MAINLINE - FOUR-LANE DIVIDED HIGHWAY
TABLE OF SUPERELEVATION BREAK POINT LOCATIONS

CURVE NO.	e	DESIGN SPEED	L_{ML} (FOOT)	TR_{ML} (FOOT)	A	B	C	D (PC/PT)	E	TRANSITION
US 24 (PI 81+38.40)	3.40%	70 MPH	153	64.95	72+52.15	73+17.10	73+82.05	74+19.10	74+70.10	TRANS IN (NC TO 3.40%)
					90+17.34	89+52.39	88+87.44	88+50.39	87+99.39	TRANS OUT (3.40% TO NC)

Note: PGL for EB & WB Lanes is at the Median Edges of Pavement; therefore, treat SE Transition the same as for a normal four-lane roadway

MODEL: Sheet 1
FILE NAME: c:\shelby_wsd\0215423\D468F92-sht-Details.dgn

BFW ENGINEERING & CONSULTING

USER NAME = sskinner	DESIGNED -	REVISED -
	DRAWN -	REVISED -
PLOT SCALE = 0.1667 ' / in.	CHECKED -	REVISED -
PLOT DATE = 8/27/2025	DATE -	REVISED -

STATE OF ILLINOIS
DEPARTMENT OF TRANSPORTATION

SUPERELEVATION TRANSITION FOR US 24 MAILINE DETAIL

SCALE: N.T.S. | SHEET 1 OF 1 SHEETS | STA. TO STA.

F.A.P. RTE.	SECTION	COUNTY	TOTAL SHEETS	SHEET NO.
317	17(RS-6,TS-2);18(RS,TS)-2	TAZEWELL	85	59
		CONTRACT NO. 68F92		
		ILLINOIS	FED. AID PROJECT	

	TRAFFIC SIGNAL CONSTRUCTION STAGING NOTES
1.	THE CONTRACTOR WILL BE ALLOWED TO PLACE THE INTERSECTION INTO ALL-RED FLASH MODE TO FACILITATE THE INSTALLATION OF THE PROPOSED TRAFFIC SIGNAL MAST ARMS, POSTS, SIGNAL HEADS, ELECTRICAL CABLE AND OTHER COMPONENTS.
2.	THE CONTRACTOR SHALL FURNISH AND INSTALL A MINIMUM OF TWO STOP SIGNS PER APPROACH WHEN THE INTERSECTION IS OPERATING IN ALL-RED FLASH MODE. THE TRAFFIC SIGNALS MAY BE PLACED INTO ALL-RED FLASH MODE BETWEEN THE HOURS OF 8:30AM AND 3:00PM ONLY.
3.	THE CONTRACTOR SHALL RESTORE THE TRAFFIC SIGNALS TO NORMAL OPERATION AT ALL OTHER TIMES, UNLESS SPECIFICALLY DIRECTED OTHERWISE BY THE ENGINEER.
4.	THE CONTRACTOR WILL BE ALLOWED TO PLACE THE INTERSECTION INTO FLASH FOR A MAXIMUM OF FIVE DAYS PER EACH LOCATION.
5.	THE CONTRACTOR WILL BE ALLOWED TO MAKE TEMPORARY SPLICES AS NEEDED TO FACILITATE THE INSTALLATION OF THE PROPOSED TRAFFIC SIGNAL EQUIPMENT.
6.	ALL COSTS (LABOR, MATERIALS, AND EQUIPMENT) ASSOCIATED WITH THESE REQUIREMENTS SHALL BE INCLUDED IN THE CONTRACT BID PRICE FOR THE PAY ITEM "TRAFFIC CONTROL AND PROTECTION, (SPECIAL)." THERE WILL BE NO ADDITIONAL COMPENSATION FOR ITEMS REQUIRED TO IMPLEMENT STAGING, INCLUDING, BUT NOT LIMITED TO, TEMPORARY CABLE SPLICES, TEMPORARY TRAFFIC POSTS, AND PREMIUM TIME HOURS.
	TRAFFIC SIGNAL CONSTRUCTION NOTES
1.	THE LOCATION OF ALL UTILITIES AND PRIVATELY OWNED FACILITIES SHALL BE FIELD VERIFIED BY THE CONTRACTOR PRIOR TO THE INSTALLATION OF ANY COMPONENTS.
2.	THE CONTRACTOR SHALL BE RESPONSIBLE FOR LOCATING EXISTING IDOT ELECTRICAL FACILITIES AT HIS/HER OWN EXPENSE IF REQUIRED. THE CONTRACTOR SHALL ALSO BE LIABLE FOR ANY DAMAGE TO IDOT FACILITIES RESULTING FROM INACCURATE LOCATING.
3.	ELECTRICAL WORK SHALL CONFORM WITH NATIONAL, STATE, AND LOCAL CODES.
4.	THE LOCATIONS FOR HANDHOLES AND CONCRETE FOUNDATIONS ARE PROVIDED FOR REFERENCE ONLY. THE ENGINEER OF TRAFFIC SHALL BE NOTIFIED FOR LOCATION VERIFICATION BEFORE INSTALLATION.
5.	ALL TRAFFIC SIGNAL SECTIONS SHALL HAVE 12" SINGLE LED LENSES.
6.	THE RED SECTIONS OF THE SIGNAL HEADS SHARING THE SAME MAST ARM SHALL BE LEVEL WITH ONE ANOTHER AND MAINTAIN A 16 FT. MINIMUM CLEARANCE FROM THE HIGHEST POINT OF THE ROADWAY TO BOTTOM OF THE SIGNAL BACKPLATE.
7.	ALL TRAFFIC SIGNAL HEAD BRACKETS ARE TO BE GALVANIZED STEEL WITH A NATURAL FINISH.
8.	ALL TRAFFIC SIGNAL STRUCTURES SHALL BE BONDED IN ACCORDANCE WITH NEC REQUIREMENTS. THIS WORK SHALL BE PAID FOR AT THE CONTRACT UNIT PRICE FOR "ELECTRIC CABLE IN CONDUIT, EQUIPMENT GROUNDING CONDUCTOR, NO. 6 1C" AND SHALL INCLUDE ALL LABOR, EQUIPMENT, AND MATERIALS (INCLUDING CLAMPS, HARDWARE, ELECTRICAL CABLE, AND ALL OTHER ITEMS REQUIRED TO BOND THE STRUCTURES).
9.	SDR 13.5 HDPE COILABLE DUCT MAY BE USED IN PLACE OF SCHEDULE 40 PVC CONDUIT.
10.	THE CONTRACTOR SHALL PROVIDE ELECTRICAL CABLE SLACK IN ACCORDANCE WITH ARTICLE 873.03.
11.	ELECTRICAL CABLE WILL BE MEASURED FOR PAYMENT IN ACCORDANCE WITH ARTICLE 873.04.
12.	THE CONTRACTOR SHALL VERIFY FIELD CONDITIONS PRIOR TO BIDDING. THERE WILL BE NO ADDITIONAL COMPENSATION PAID FOR CLAIMS THAT ARISE FROM A FAILURE TO FULLY INVESTIGATE EXISTING FIELD CONDITIONS.
13.	THE EXISTING TRAFFIC SIGNALS SHALL REMAIN IN OPERATION DURING THE CONSTRUCTION OF THE PROPOSED TRAFFIC SIGNALS.
14.	ANY MAINTENANCE OF EXISTING TRAFFIC SIGNALS WILL BE CONSIDERED EXTRA WORK IN ACCORDANCE WITH ARTICLE 109.04 OF THE STANDARD SPECIFICATIONS.
15.	THE HANDHOLES SHALL BE CONSTRUCTED SO THAT THE TOP OF THE FRAME WILL BE FLUSH WITH THE SURFACE OF THE SHOULDER, ISLAND PAVEMENT, SIDEWALK OR GROUND LINE.
16.	ALL SURPLUS MATERIALS SHALL BE DISPOSED OF IN ACCORDANCE WITH ARTICLE 202.03 OF THE STANDARD SPECIFICATIONS.
17.	COILABLE POLYETHYLENE DUCT MAY BE SUBSTITUTED FOR PVC PUSHED OR TRENCHED.
18.	NO ADDITIONAL COMPENSATION WILL BE ALLOWED FOR PLACING CONDUIT AT GREATER THAN 2 FT. MINIMUM DEPTH TO AVOID OBSTACLES SUCH AS UNDERGROUND UTILITIES.
19.	THE CONTRACTOR IS RESPONSIBLE FOR THE COST OF UNCOVERING OR HAND DIGGING AROUND UTILITIES AS NECESSARY. THIS COST OF THIS WORK SHALL BE INCLUDED IN THE UNIT PRICES FOR THE CONDUITS.
20.	THE CONTRACTOR SHALL FURNISH AND INSTALL GROUT AROUND ALL DRILLED CONDUITS LOCATED INSIDE OF HANDHOLES TO PREVENT WATER AND DIRT INTRUSION INTO THE HANDHOLE. THE COST OF THIS WORK SHALL BE INCLUDED IN THE COST OF "DRILL EXISTING HANDHOLE."
21.	WITHIN THIRTY CALENDAR DAYS AFTER CONTRACT EXECUTION, THE CONTRACTOR SHALL SUBMIT J.U.L.I.E. TICKETS TO HAVE THE UNDERGROUND UTILITIES MARKED AT THE INTERSECTION AND THEN SCHEDULE AN ON-SITE MEETING WITH THE RESIDENT ENGINEER AND IDOT D4 TRAFFIC OPERATIONS TO DETERMINE AND MARK THE EXACT PLACEMENT OF THE PROPOSED TRAFFIC SIGNAL COMPONENTS.
22.	THE CONTRACTOR SHALL FURNISH AND INSTALL ONE 20A 1-POLE CIRCUIT BREAKER, BUTTON PHOTOCELL, TERMINAL BLOCK WIRING, AND ALL OTHER ITEMS REQUIRED TO PROVIDE POWER TO THE PROPOSED LUMINAIRES. THESE ITEMS SHALL BE INSTALLED IN THE PROPOSED TRAFFIC SIGNAL CABINET. ALL LUMINAIRES SHALL BE WIRED TO 120V. THE COST OF THIS WORK SHALL BE INCLUDED IN THE BID PRICE FOR THE PROPOSED CONTROLLER CABINET.

TRAFFIC SIGNAL SCHEDULE OF QUANTITIES				TAZEWELL COUNTY	
				EAST PEORIA	WASHINGTON
				US 24 & GRANGE	US 24 & CUMMINGS
ITEM NUMBER	ITEM DESCRIPTION	UNIT	TOTAL QTY.	QTY.	QTY.
72000100	SIGN PANEL - TYPE 1	SQ FT	10.0		10.0
72000200	SIGN PANEL - TYPE 2	SQ FT	160.2	77.6	82.6
80400100	ELECTRIC SERVICE INSTALLATION	EACH	2.0	1.0	1.0
81028350	UNDERGROUND CONDUIT, PVC, 2" DIA.	FOOT	80.0		80.0
81028370	UNDERGROUND CONDUIT, PVC, 3" DIA.	FOOT	632.0	297.0	335.0
81028380	UNDERGROUND CONDUIT, PVC, 3 1/2" DIA.	FOOT	497.0	185.0	312.0
81400700	HANDHOLE, PORTLAND CEMENT CONCRETE	EACH	2.0	1.0	1.0
81400720	DOUBLE HANDHOLE, PORTLAND CEMENT CONCRETE	EACH	1.0	1.0	
81702110	ELECTRIC CABLE IN CONDUIT, 600V (XLP-TYPE USE) 1/C NO. 10	FOOT	3904.0	1739.0	2165.0
82110008	LUMINAIRE, LED, ROADWAY, OUTPUT DESIGNATION H	EACH	8.0	4.0	4.0
86300400	CONTROLLER CABINET TYPE IV	EACH	2.0	1.0	1.0
87301225	ELECTRIC CABLE IN CONDUIT, SIGNAL NO. 14 3C	FOOT	130.5		130.5
87301245	ELECTRIC CABLE IN CONDUIT, SIGNAL NO. 14 5C	FOOT	7762.5	2752.5	5010.0
87301255	ELECTRIC CABLE IN CONDUIT, SIGNAL NO. 14 7C	FOOT	1158.0		1158.0
87301515	ELECTRIC CABLE IN CONDUIT, LEAD-IN, NO. 18 3 PAIR	FOOT	2248.5	834.5	1414.0
87301900	ELECTRIC CABLE IN CONDUIT, EQUIPMENT GROUNDING CONDUCTOR, NO. 6 1C	FOOT	1528.5	603.0	925.5
87502460	TRAFFIC SIGNAL POST, GALVANIZED STEEL 12 FT.	EACH	1.0		1.0
87502500	TRAFFIC SIGNAL POST, GALVANIZED STEEL 16 FT.	EACH	4.0		4.0

TRAFFIC SIGNAL SCHEDULE OF QUANTITIES - CONTINUED				TAZEWELL COUNTY	
				EAST PEORIA	WASHINGTON
				US 24 & GRANGE	US 24 & CUMMINGS
ITEM NUMBER	ITEM DESCRIPTION	UNIT	TOTAL QTY.	QTY.	QTY.
87502520	TRAFFIC SIGNAL POST, GALVANIZED STEEL 18 FT.	EACH	1.0		1.0
87700290	STEEL MAST ARM ASSEMBLY AND POLE, 50 FT.	EACH	1.0	1.0	
87700300	STEEL MAST ARM ASSEMBLY AND POLE, 52 FT.	EACH	1.0		1.0
87702970	STEEL COMBINATION MAST ARM ASSEMBLY AND POLE 48 FT.	EACH	1.0		1.0
87702980	STEEL COMBINATION MAST ARM ASSEMBLY AND POLE 50 FT.	EACH	1.0	1.0	
87703000	STEEL COMBINATION MAST ARM ASSEMBLY AND POLE 55 FT.	EACH	2.0	2.0	
87703020	STEEL COMBINATION MAST ARM ASSEMBLY AND POLE 58 FT.	EACH	1.0		1.0
87703030	STEEL COMBINATION MAST ARM ASSEMBLY AND POLE 60 FT.	EACH	1.0		1.0
87800415	CONCRETE FOUNDATION, TYPE E 36-INCH DIAMETER	FOOT	91.0	63.0	28.0
87800420	CONCRETE FOUNDATION, TYPE E 42-INCH DIAMETER	FOOT	42.0		42.0
87900100	DRILL EXISTING FOUNDATION	EACH	4.0	2.0	2.0
87900200	DRILL EXISTING HANDHOLE	EACH	22.0	4.0	18.0
88040070	SIGNAL HEAD, POLYCARBONATE, LED, 1-FACE, 3-SECTION, BRACKET MOUNTED	EACH	16.0	6.0	10.0
88040090	SIGNAL HEAD, POLYCARBONATE, LED, 1-FACE, 3-SECTION, MAST ARM MOUNTED	EACH	14.0	8.0	6.0
88040110	SIGNAL HEAD, POLYCARBONATE, LED, 1-FACE, 4-SECTION, BRACKET MOUNTED	EACH	2.0		2.0
88040120	SIGNAL HEAD, POLYCARBONATE, LED, 1-FACE, 4-SECTION, MAST ARM MOUNTED	EACH	2.0		2.0

TRAFFIC SIGNAL SCHEDULE OF QUANTITIES - CONTINUED				TAZEWELL COUNTY	
				EAST PEORIA	WASHINGTON
				US 24 & GRANGE	US 24 & CUMMINGS
ITEM NUMBER	ITEM DESCRIPTION	UNIT	TOTAL QTY.	QTY.	QTY.
88102825	PEDESTRIAN SIGNAL HEAD, POLYCARBONATE, LED, 1-FACE, BRACKET MOUNTED WITH COUNT DOWN TIMER	EACH	4.0		4.0
88200100	TRAFFIC SIGNAL BACKPLATE	EACH	34.0	14.0	20.0
88500500	INDUCTION LOOP DETECTOR AMPLIFIER	EACH	10.0	4.0	6.0
88600100	DETECTOR LOOP, TYPE I	FOOT	1799.0	750.0	1049.0
89500200	RELOCATE EXISTING PEDESTRIAN SIGNAL HEAD	EACH	1.0		1.0
89500300	RELOCATE EXISTING ILLUMINATED SIGN	EACH	1.0		1.0
89500400	RELOCATE EXISTING PEDESTRIAN PUSH-BUTTON	EACH	3.0		3.0
89502220	MODIFY EXISTING CONCRETE FOUNDATION	EACH	2.0		2.0
89502375	REMOVE EXISTING TRAFFIC SIGNAL EQUIPMENT	EACH	2.0	1.0	1.0
89502380	REMOVE EXISTING HANDHOLE	EACH	2.0	2.0	
89502385	REMOVE EXISTING CONCRETE FOUNDATION	EACH	5.0	4.0	1.0
X0320023	CLOSED CIRCUIT TELEVISION DOME CAMERA, HD	EACH	2.0	1.0	1.0
X0326812	CAT 5 ETHERNET CABLE	FOOT	209.5	83.5	126.0
X1400434	DILEMMA ZONE DETECTION SYSTEM	EACH	4.0	2.0	2.0
X4402815	ISLAND PAVEMENT REMOVAL AND REPLACEMENT	SQ FT	80.0		80.0
X7010216	TRAFFIC CONTROL AND PROTECTION, (SPECIAL)	L SUM	1.0	0.5	0.5
X8140234	REPLACE HANDHOLE COVER	EACH	2.0	2.0	
Z0033068	TRAFFIC SIGNAL BATTERY BACKUP SYSTEM	EACH	2.0	1.0	1.0

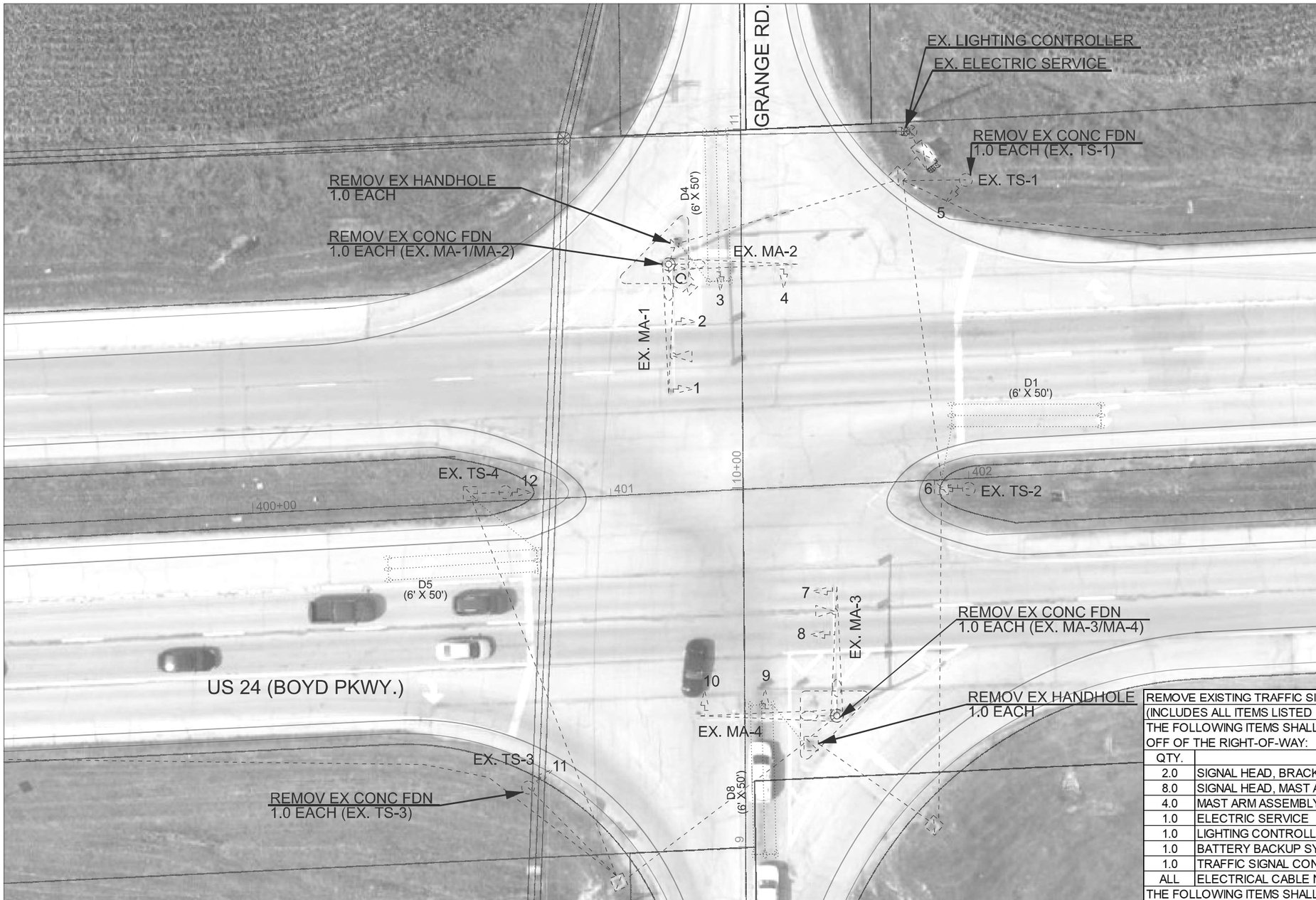

TRAFFIC SIGNALS LEGEND

⌐ - - - - -	EX. MAST ARM ASSEMBLY
⊠	EX. TRAFFIC SIGNAL CONTROLLER
BBS	EX. BATTERY BACKUP SYSTEM
-⊏	EX. ELECTRIC SERVICE INSTALLATION
⊠	EX. HANDHOLE
◌	EX. WOOD POLE
○	EX. TRAFFIC SIGNAL POST
⊣	EX. SIGNAL HEAD WITH BACKPLATE
C	EX. CCTV CAMERA
⊏	EX. MICROWAVE VEHICLE DETECTOR
○- - ◯	EX. ROADWAY LUMINAIRE
▭	EX. QUADRAPOLE DETECTOR LOOP
- - - - -	EX. CONDUIT
——A——	EX. AERIAL UTILITIES

NOTES:

1. THE CONTRACTOR SHALL NOT REMOVE THE EXISTING TRAFFIC SIGNAL ITEMS UNTIL THE PROPOSED TRAFFIC SIGNAL ITEMS ARE INSTALLED AND OPERATIONAL. SEE STAGING PLANS FOR DETAILS.

REMOVE EXISTING TRAFFIC SIGNAL EQUIPMENT - QTY. 1.0 EACH (INCLUDES ALL ITEMS LISTED BELOW)	
THE FOLLOWING ITEMS SHALL BE REMOVED AND DISPOSED OF BY THE CONTRACTOR OFF OF THE RIGHT-OF-WAY:	
QTY.	ITEM DESCRIPTION
2.0	SIGNAL HEAD, BRACKET MOUNTED (SIGNAL HEADS 5, 11)
8.0	SIGNAL HEAD, MAST ARM MOUNTED (SIGNAL HEADS 1, 2, 3, 4, 7, 8, 9, 10)
4.0	MAST ARM ASSEMBLY AND POLE (MA-1, MA-2, MA-3, MA-4)
1.0	ELECTRIC SERVICE
1.0	LIGHTING CONTROLLER
1.0	BATTERY BACKUP SYSTEM
1.0	TRAFFIC SIGNAL CONTROLLER CABINET
ALL	ELECTRICAL CABLE NOT USED IN PROPOSED PLANS
THE FOLLOWING ITEMS SHALL BE REMOVED AND DELIVERED TO THE IDOT TRAFFIC BUILDING AT 1025 W. DETWEILLER DR. PEORIA:	
QTY.	ITEM DESCRIPTION
4.0	LED LUMINAIRES
1.0	CCTV CAMERA
2.0	DILEMMA ZONE DETECTION SYSTEM (2 SENSORS AND ALL CABINET EQUIPMENT)
THE FOLLOWING ITEMS SHALL BE REMOVED AND DELIVERED TO THE IDOT PEORIA WEST MAINTENANCE FACILITY AT 6500 WEST HIGHWAY 150, EDWARDS :	
QTY.	ITEM DESCRIPTION
2.0	TRAFFIC SIGNAL POST (TS-1, TS-3)

NOT TO SCALE

BILL OF MATERIALS

US 24 & GRANGE RD. - REMOVAL

ITEM DESCRIPTION	UNIT	QTY.
REMOVE EXISTING TRAFFIC SIGNAL EQUIPMENT	EACH	1.0
REMOVE EXISTING CONCRETE FOUNDATION (MA-1/MA-2, MA-3/MA-4, TS-1, TS-3)	EACH	4.0
REMOVE EXISTING HANDHOLE	EACH	2.0

MODEL: Default [Sheet] - 5
FILE NAME: c:\pw_work\pwidot\[illegible]\D468F92-sht-TS.dgn

USER NAME = [illegible]	DESIGNED -	REVISED -	
	DRAWN -	REVISED -	
	CHECKED -	REVISED -	
PLOT DATE = 5/7/2025	DATE -	REVISED -	

STATE OF ILLINOIS
DEPARTMENT OF TRANSPORTATION

EXISTING TRAFFIC SIGNAL PLANS & REMOVAL ITEMS
US 24 (BOYD PKWY.) & GRANGE RD.

SCALE: SHEET 5 OF 17 SHEETS STA. TO STA.

F.A.P RTE.	SECTION	COUNTY	TOTAL SHEETS	SHEET NO.
317	17(RS-6,TS-2);18(RS,TS)-2	TAZEWELL	85	64
CONTRACT NO. 68F92				
ILLINOIS	FED. AID PROJECT			

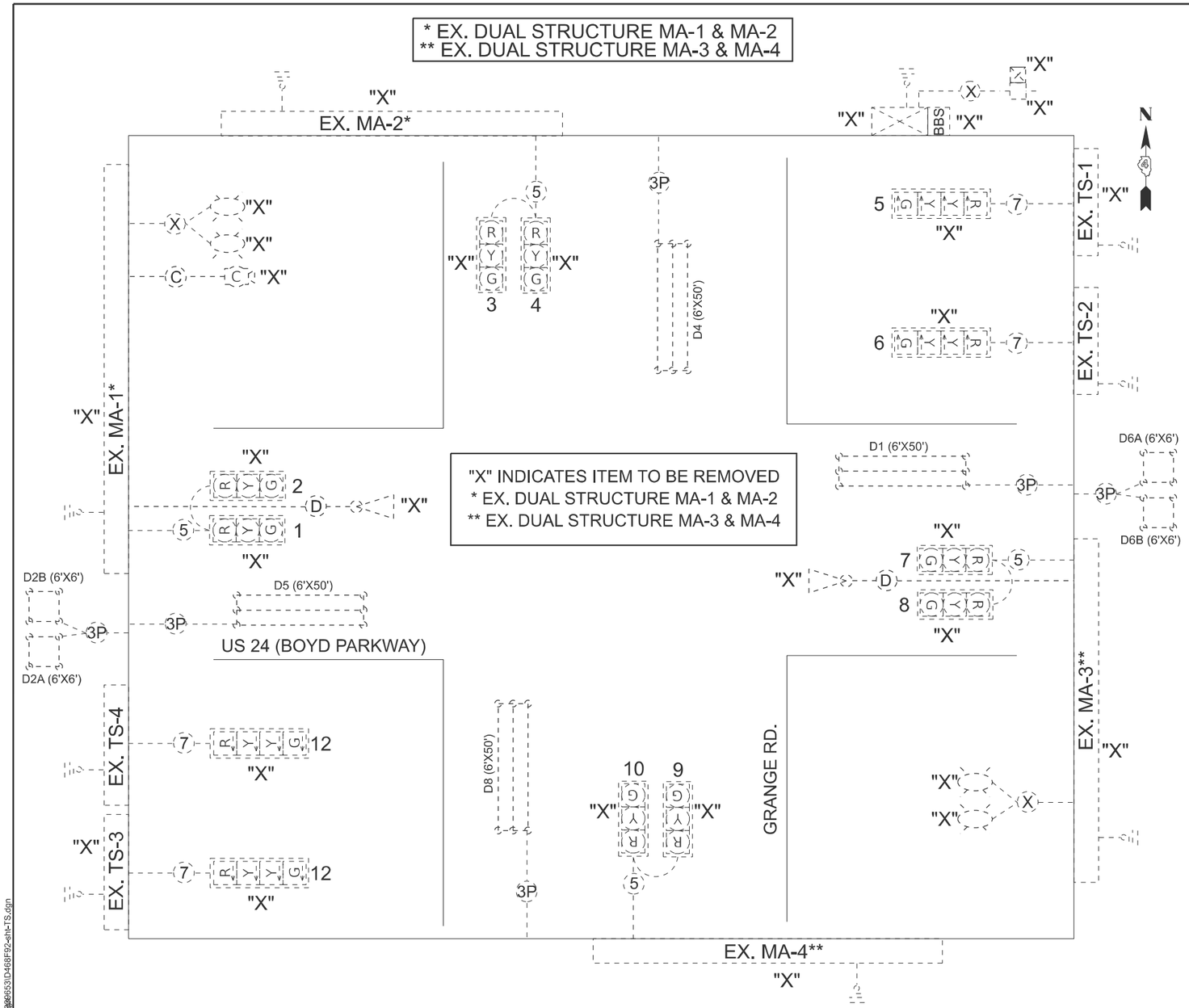

EXISTING PHASE DIAGRAM

NAME OF INTERSECTION US 24 (BOYD PKWY.) & GRANGE RD.

EXISTING CONTROLLER: EX. ECONOLITE COBALT (TS-2 TYPE 2) IN EX. TYPE IV TS-2 CABINET (16 POS. LOAD BAY)

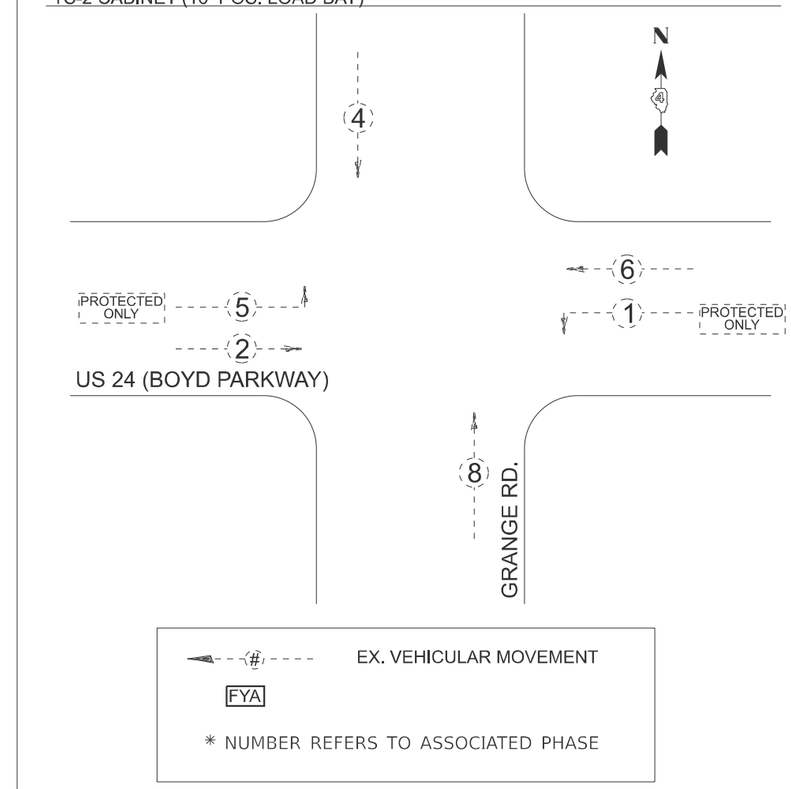

TRAFFIC SIGNALS LEGEND

- EX. TRAFFIC SIGNAL CONTROLLER CABINET
- EX. BATTERY BACKUP SYSTEM
- EX. ELECTRIC SERVICE
- EX. GROUND/SAFETY BOND
- EX. QUADRAPOLE DETECTOR LOOP
- EX. DETECTOR LOOP
- EX. 3 SEC. SIGNAL HEAD WITH BACKPLATE
- EX. 3 SEC. SIGNAL HEAD WITHOUT BACKPLATE
- EX. ROADWAY LUMINAIRE (RELOCATED)
- EX. CCTV CAMERA
- EX. MICROWAVE VEHICLE DETECTOR (RELOCATED)
- EX. LIGHTING CONTROLLER
- EX. 5/C NO. 14 SIGNAL CABLE
- EX. 7/C NO. 14 SIGNAL CABLE
- EX. 1/C NO. 6 CABLE
- EX. CAT 5 ETHERNET CABLE
- EX. MICROWAVE DETECTOR CABLE

NOT TO SCALE

MODEL: D9(SIGSheet) - 6
FILE NAME: c:\pw_work\pwidot\illinois\d0928068\dgn\d0928068_sht-TS.dgn

USER NAME = thevrabusson	DESIGNED -	REVISED -	
	DRAWN -	REVISED -	
	CHECKED -	REVISED -	
PLOT DATE = 5/20/2025	DATE -	REVISED -	

STATE OF ILLINOIS
DEPARTMENT OF TRANSPORTATION

EXISTING CABLE AND PHASE DIAGRAM
US 24 (BOYD PKWY.) & GRANGE RD.

SCALE: | SHEET 6 OF 17 SHEETS | STA. | TO STA.

F.A.P RTE.	SECTION	COUNTY	TOTAL SHEETS	SHEET NO.
317	17(RS-6,TS-2);18(RS,TS)-2	TAZEWELL	85	65

CONTRACT NO. 68F92

ILLINOIS | FED. AID PROJECT

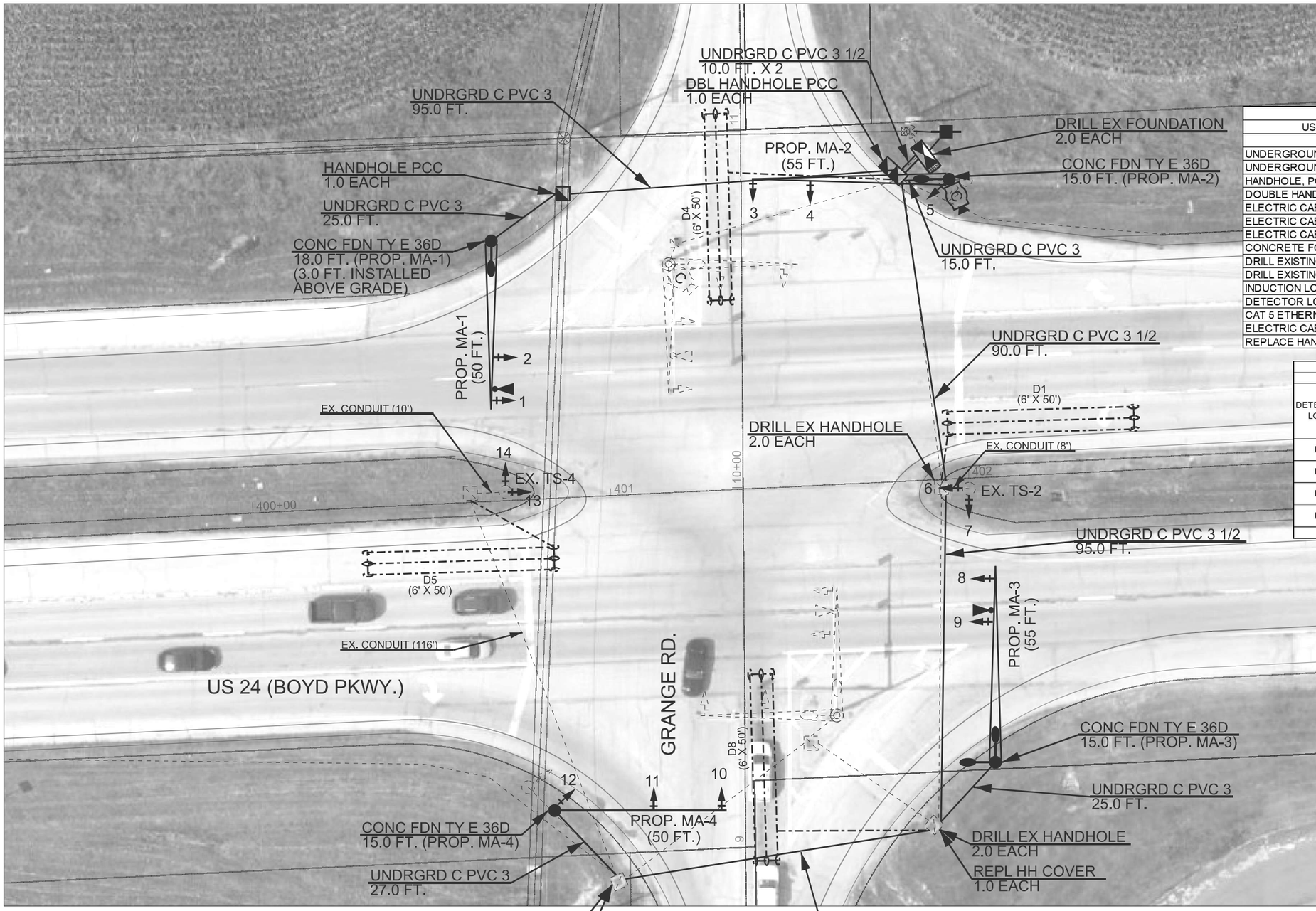

BILL OF MATERIALS		
US 24 & GRANGE RD. - PROPOSED (AT AND BELOW GRADE)		
ITEM DESCRIPTION	UNIT	QTY.
UNDERGROUND CONDUIT, PVC, 3" DIA.	FOOT	277.0
UNDERGROUND CONDUIT, PVC, 3 1/2" DIA.	FOOT	205.0
HANDHOLE, PORTLAND CEMENT CONCRETE	EACH	1.0
DOUBLE HANDHOLE, PORTLAND CEMENT CONCRETE	EACH	1.0
ELECTRIC CABLE IN CONDUIT, 600V (XLP-TYPE USE) 1/C NO. 10	FOOT	1739.0
ELECTRIC CABLE IN CONDUIT, SIGNAL NO. 14 5C	FOOT	2752.5
ELECTRIC CABLE IN CONDUIT, EQUIPMENT GROUNDING	FOOT	603.0
CONCRETE FOUNDATION, TYPE E 36-INCH DIAMETER	FOOT	63.0
DRILL EXISTING FOUNDATION	EACH	2.0
DRILL EXISTING HANDHOLE	EACH	4.0
INDUCTION LOOP DETECTOR AMPLIFIER	EACH	4.0
DETECTOR LOOP, TYPE I	FOOT	750.0
CAT 5 ETHERNET CABLE	FOOT	83.5
ELECTRIC CABLE IN CONDUIT, LEAD-IN, NO. 18 3 PAIR	FOOT	834.5
REPLACE HANDHOLE COVER	EACH	2.0

DETECTOR LOOP SCHEDULE					
US 24 & GRANGE RD.					
DETECTOR LOOP	TYPE	ASSIGNED PHASE	DETECTOR LOOP, TYPE I	ELECTRIC CABLE IN CONDUIT, LEAD-IN, NO. 18 3 PAIR	INDUCTION LOOP DETECTOR AMPLIFIER
			QTY. (FOOT)	QTY. (FOOT)	QTY. (EACH)
D1	6' X 50' (QUAD)	1	169.0	127	1.0
D4	6' X 50' (QUAD)	4	208.0	22.5	1.0
D5	6' X 50' (QUAD)	5	175.0	453.5	1.0
D8	6' X 50' (QUAD)	8	198.0	231.5	1.0
TOTAL			**750.0**	**834.5**	**4.0**

TRAFFIC SIGNALS LEGEND

- PROP. MAST ARM ASSEMBLY (COMBINATION)
- PROP. MAST ARM ASSEMBLY
- PROP. TRAFFIC SIGNAL CONTROLLER CABINET
- PROP. BATTERY BACKUP SYSTEM
- PROP. ELECTRIC SERVICE INSTALLATION
- EX. HANDHOLE
- PROP. HANDHOLE, PCC
- PROP. DOUBLE HANDHOLE, PCC
- EX. WOOD POLE
- EX. TRAFFIC SIGNAL POST
- PROP. TRAFFIC SIGNAL POST
- EX. SIGNAL HEAD WITH BACKPLATE
- PROP. SIGNAL HEAD WITH BACKPLATE
- PROP. CCTV CAMERA
- PROP. MICROWAVE VEHICLE DETECTOR
- PROP. ROADWAY LUMINAIRE
- PROP. QUADRAPOLE DETECTOR LOOP
- EX. CONDUIT
- PROP. CONDUIT
- EX. AERIAL UTILITIES

NOTES:

1. THE CONCRETE FOUNDATION FOR PROP. MA-1 SHALL BE INSTALLED WITH AN ADDITIONAL 3 FT. ABOVE GRADE IN ORDER TO MEET VERTICAL CLEARANCE REQUIREMENTS BETWEEN THE SIGNAL HEADS AND ROADWAY PAVEMENT.

NOT TO SCALE

MODEL: [illegible] - 7
FILE NAME: c:\pw_work\pwidot\illinois\dpw\08989684\Sign\@All\Contract\08989653\D468F92-sht-TS.dgn

USER NAME = thevadamson	DESIGNED -	REVISED -	
	DRAWN -	REVISED -	
	CHECKED -	REVISED -	
PLOT DATE = 5/2/2025	DATE -	REVISED -	

STATE OF ILLINOIS
DEPARTMENT OF TRANSPORTATION

PROPOSED TRAFFIC SIGNAL PLANS (AT AND BELOW GRADE)
US 24 (BOYD PKWY.) & GRANGE RD.

SCALE: | SHEET 7 OF 17 SHEETS | STA. | TO STA.

F.A.P RTE.	SECTION	COUNTY	TOTAL SHEETS	SHEET NO.
317	17(RS-6,TS-2);18(RS,TS)-2	TAZEWELL	85	66
		CONTRACT NO. 68F92		
		ILLINOIS FED. AID PROJECT		

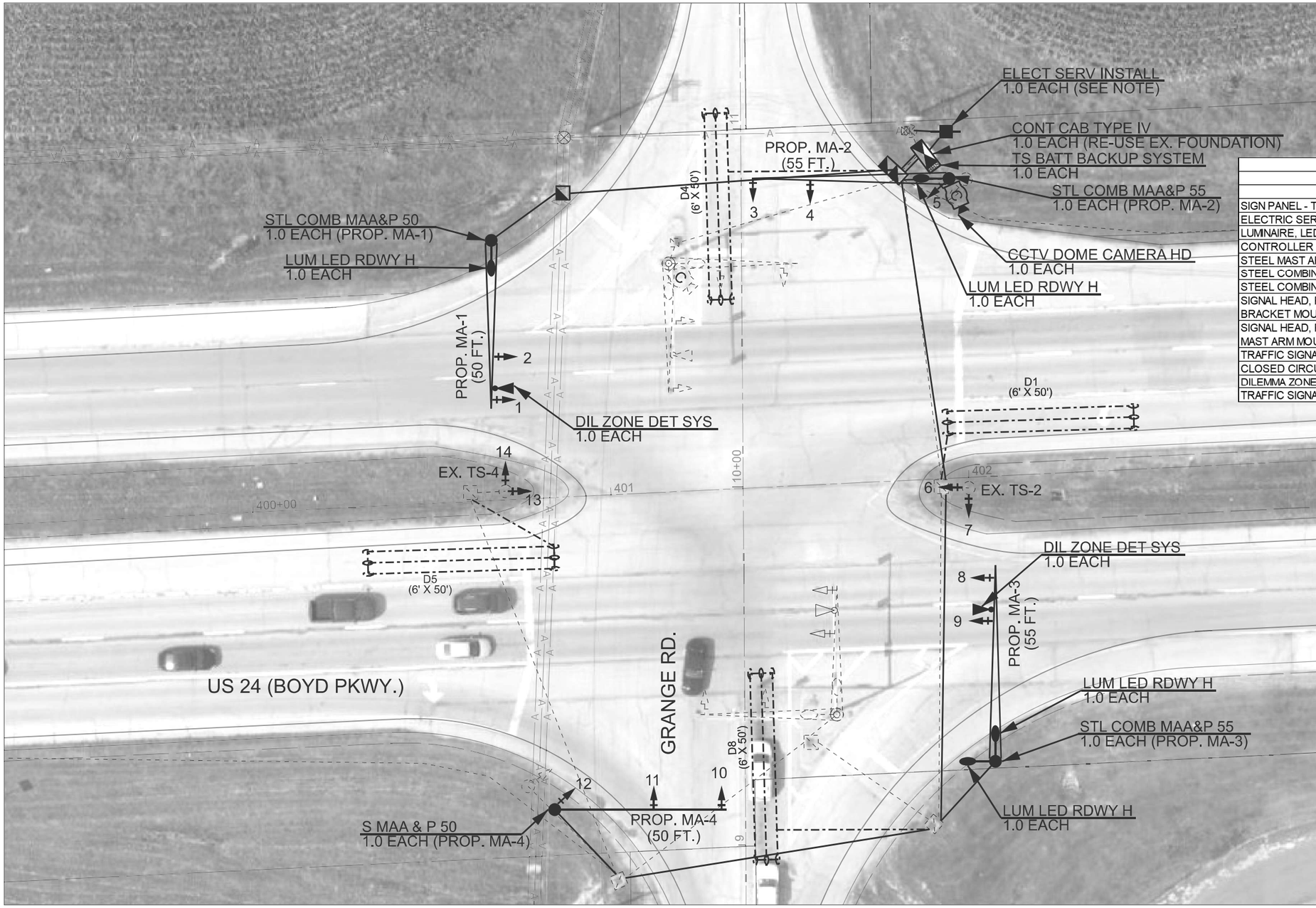

BILL OF MATERIALS		
US 24 & GRANGE RD. - PROPOSED (ABOVE GRADE)		
ITEM DESCRIPTION	UNIT	QTY.
SIGN PANEL - TYPE 2	SQ FT	77.6
ELECTRIC SERVICE INSTALLATION	EACH	1.0
LUMINAIRE, LED, ROADWAY, OUTPUT DESIGNATION H	EACH	4.0
CONTROLLER CABINET TYPE IV	EACH	1.0
STEEL MAST ARM ASSEMBLY AND POLE, 50 FT.	EACH	1.0
STEEL COMBINATION MAST ARM ASSEMBLY AND POLE 50 FT.	EACH	1.0
STEEL COMBINATION MAST ARM ASSEMBLY AND POLE 55 FT.	EACH	2.0
SIGNAL HEAD, POLYCARBONATE, LED, 1-FACE, 3-SECTION, BRACKET MOUNTED	EACH	6.0
SIGNAL HEAD, POLYCARBONATE, LED, 1-FACE, 3-SECTION, MAST ARM MOUNTED	EACH	8.0
TRAFFIC SIGNAL BACKPLATE	EACH	12.0
CLOSED CIRCUIT TELEVISION DOME CAMERA, HD	EACH	1.0
DILEMMA ZONE DETECTION SYSTEM	EACH	2.0
TRAFFIC SIGNAL BATTERY BACKUP SYSTEM	EACH	1.0

TRAFFIC SIGNALS LEGEND

- PROP. MAST ARM ASSEMBLY (COMBINATION)
- PROP. MAST ARM ASSEMBLY
- PROP. TRAFFIC SIGNAL CONTROLLER CABINET
- PROP. BATTERY BACKUP SYSTEM
- PROP. ELECTRIC SERVICE INSTALLATION
- EX. HANDHOLE
- EX. WOOD POLE
- EX. TRAFFIC SIGNAL POST
- PROP. TRAFFIC SIGNAL POST
- EX. SIGNAL HEAD WITH BACKPLATE
- PROP. SIGNAL HEAD WITH BACKPLATE
- PROP. CCTV CAMERA
- PROP. MICROWAVE VEHICLE DETECTOR
- PROP. ROADWAY LUMINAIRE
- PROP. QUADRAPOLE DETECTOR LOOP
- EX. CONDUIT
- PROP. CONDUIT
- EX. AERIAL UTILITIES

TRAFFIC SIGNAL HEAD SCHEDULE			
US 24 (BOYD PKWY.) & GRANGE RD.			
PROP. QTY.	UNIT	ITEM	LOCATION
4.0	EACH	SH P LED 1F 3S BM	5,7,12,14
8.0	EACH	SH P LED 1F 3S MAM	1,2,3,4,8,9,10,11
12.0	EACH	TS BACKPLATE	1,2,3,4,5,7,8,9,10,11,12,14

MAST ARM AND TRAFFIC SIGNAL POST SCHEDULE						
US 24 (BOYD PKWY.) & GRANGE RD.						
NAME	DESCRIPTION	LENGTH	FOUNDATION DETAILS			LOCATION
			DIAMETER	TYPE	DEPTH	
MA-1	COMB. MAA&P	50 FT.	36 IN.	E	18 FT.	NW QUAD
MA-2	COMB. MAA&P	55 FT.	36 IN.	E	15 FT.	NE QUAD
MA-3	COMB. MAA&P	55 FT.	36 IN.	E	15 FT.	SE QUAD
MA-4	MAA&P	50 FT.	36 IN.	E	15 FT.	SW QUAD

NOTES:
1. THE CONCRETE FOUNDATION FOR PROP. MA-1 SHALL BE INSTALLED WITH AN ADDITIONAL 3 FT. ABOVE GRADE IN ORDER TO MEET VERTICAL CLEARANCE REQUIREMENTS BETWEEN THE SIGNAL HEADS AND ROADWAY PAVEMENT.

NOT TO SCALE

MODEL: Default
FILE NAME: c:\pw_work\pwidot\thanson\d0939664\Signals Complete.dgn

USER NAME = trevor.hanson	DESIGNED -	REVISED -	
	DRAWN -	REVISED -	
	CHECKED -	REVISED -	
PLOT DATE = 1/7/2025	DATE -	REVISED -	

STATE OF ILLINOIS
DEPARTMENT OF TRANSPORTATION

PROPOSED TRAFFIC SIGNAL PLANS (ABOVE GRADE)
US 24 (BOYD PKWY.) & GRANGE RD.

SCALE: | SHEET OF SHEETS | STA. TO STA.

F.A. RTE.	SECTION	COUNTY	TOTAL SHEETS	SHEET NO.
317	17(RS-6,TS-2);18(RS,TS)-2	TAZEWELL	85	67
		CONTRACT NO.		
		ILLINOIS FED. AID PROJECT		

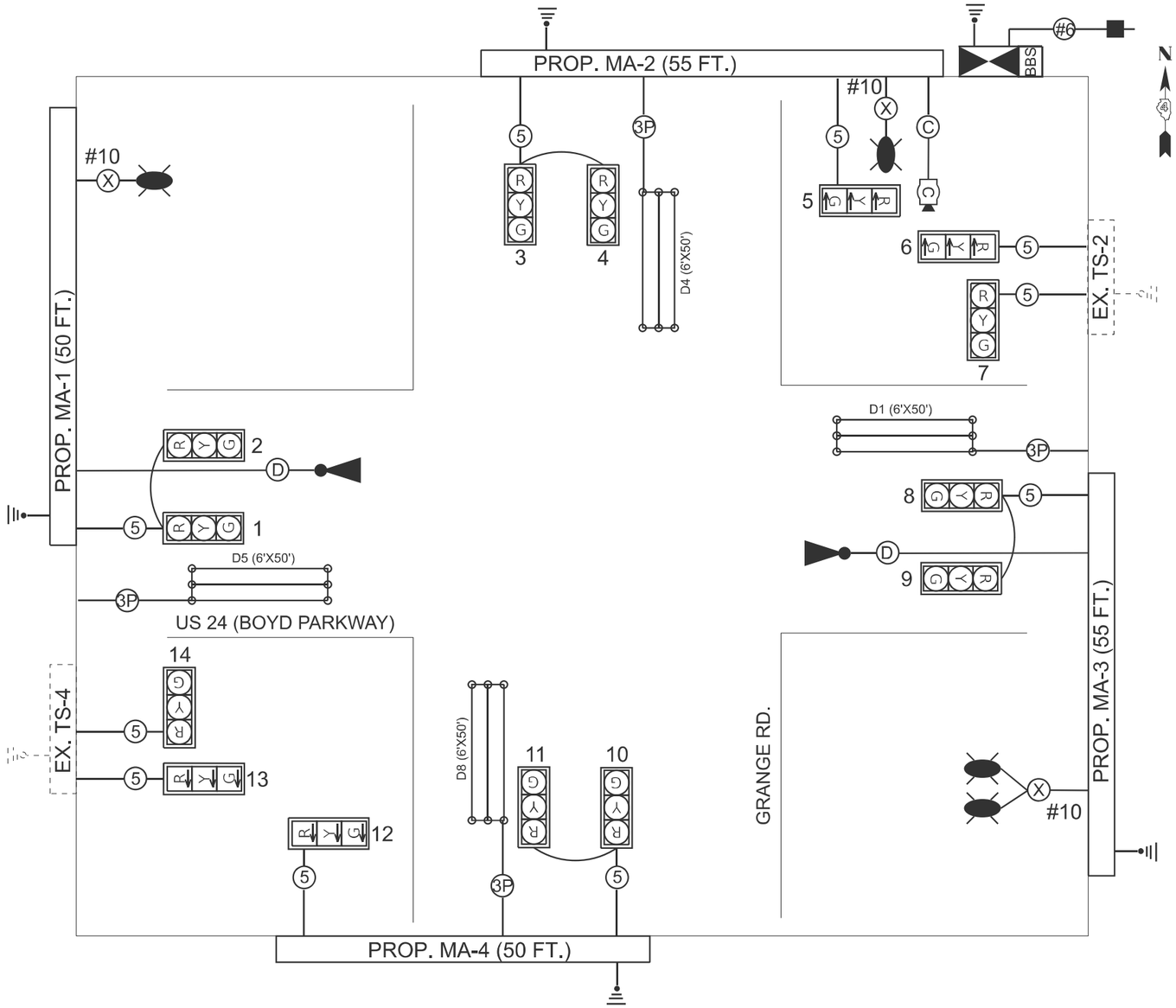

PROPOSED PHASE DIAGRAM

NAME OF INTERSECTION US 24 (BOYD PKWY.) & GRANGE RD.

PROPOSED CONTROLLER: EXISTING ECONOLITE COBALT (TS-2 TYPE 2) IN PROPOSED TYPE IV TS-2 CABINET (16 POSITION LOAD BAY)

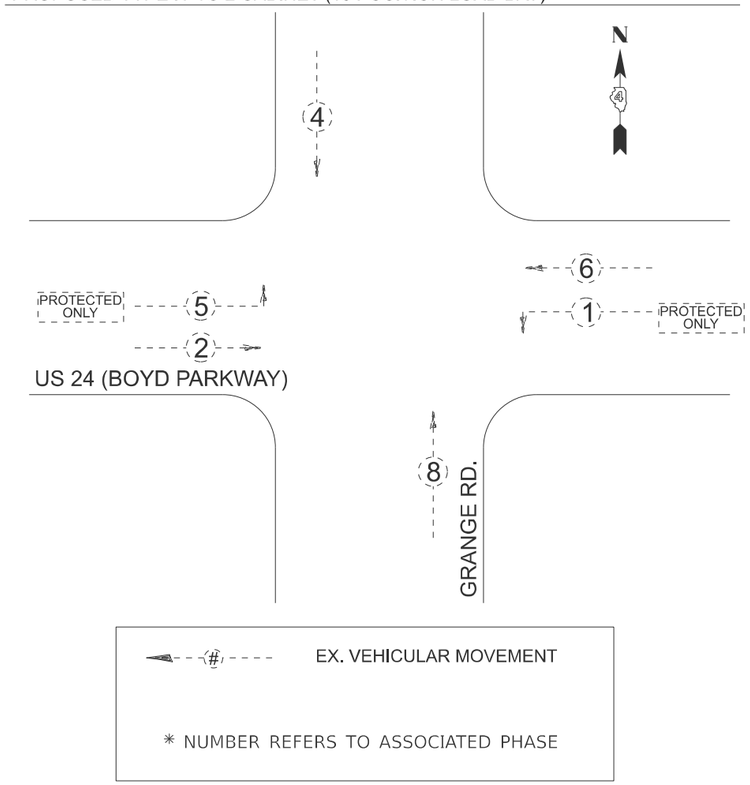

TRAFFIC SIGNALS LEGEND

- PROP. TRAFFIC SIGNAL CONTROLLER CABINET
- PROP. BATTERY BACKUP SYSTEM
- PROP. ELECTRIC SERVICE
- EX. GROUND/SAFETY BOND
- PROP. GROUND/SAFETY BOND
- EX. QUADRAPOLE DETECTOR LOOP
- EX. 3-SECTION SIGNAL HEAD WITH BACKPLATE
- PROP. 3-SECTION SIGNAL HEAD WITH BACKPLATE
- PROP. LED ROADWAY LUMINAIRE
- PROP. CCTV CAMERA
- PROP. MICROWAVE VEHICLE DETECTOR
- PROP. 1/C NO. 6 CABLE
- (5) PROP. 5/C NO. 14 SIGNAL CABLE
- (7) PROP. 7/C NO. 14 SIGNAL CABLE
- (X) PROP. 1/C NO. 10 CABLE
- (C) PROP. CAT 5 ETHERNET CABLE
- (D) PROP. MICROWAVE DETECTOR CABLE
- (V) PROP. VIDEO DETECTION CABLE
- (3P) PROP. LEAD-IN, NO. 18, 3-PAIR

NOT TO SCALE

MODEL: [illegible] - 9
FILE NAME: c:\pw_work\pwidot\[illegible]\d1468f92-sht-TS.dgn

USER NAME = [illegible]	DESIGNED -	REVISED -	
	DRAWN -	REVISED -	
	CHECKED -	REVISED -	
PLOT DATE = 5/2/2025	DATE -	REVISED -	

STATE OF ILLINOIS
DEPARTMENT OF TRANSPORTATION

PROPOSED CABLE AND PHASE DIAGRAM
US 24 (BOYD PKWY.) & GRANGE RD.

SCALE: | SHEET 9 OF 17 SHEETS | STA. | TO STA.

F.A.P RTE.	SECTION	COUNTY	TOTAL SHEETS	SHEET NO.
317	17(RS-6,TS-2);18(RS,TS)-2	TAZEWELL	85	68

CONTRACT NO. 68F92

ILLINOIS | FED. AID PROJECT

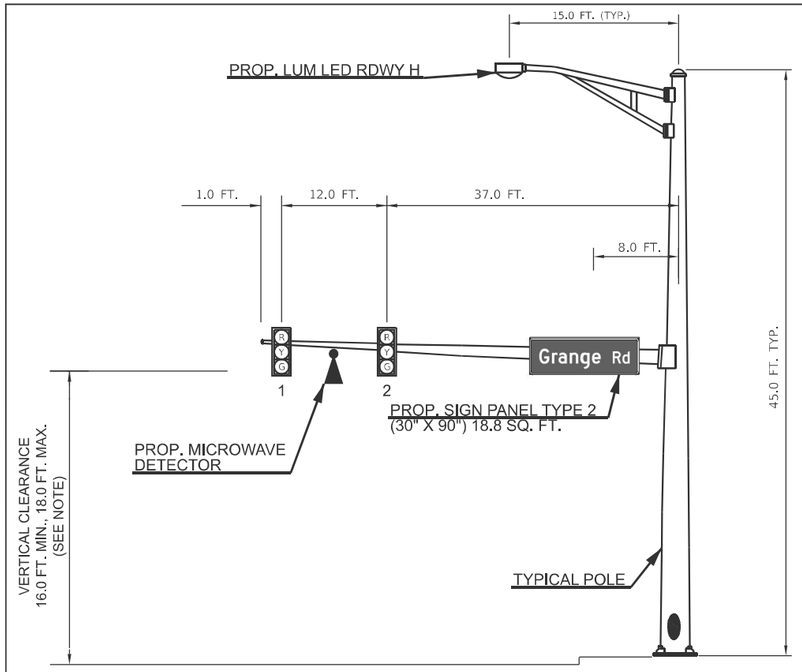

WESTBOUND TRAFFIC SIGNAL
PROP. MA-1 (50 FT.)
NORTHWEST QUADRANT

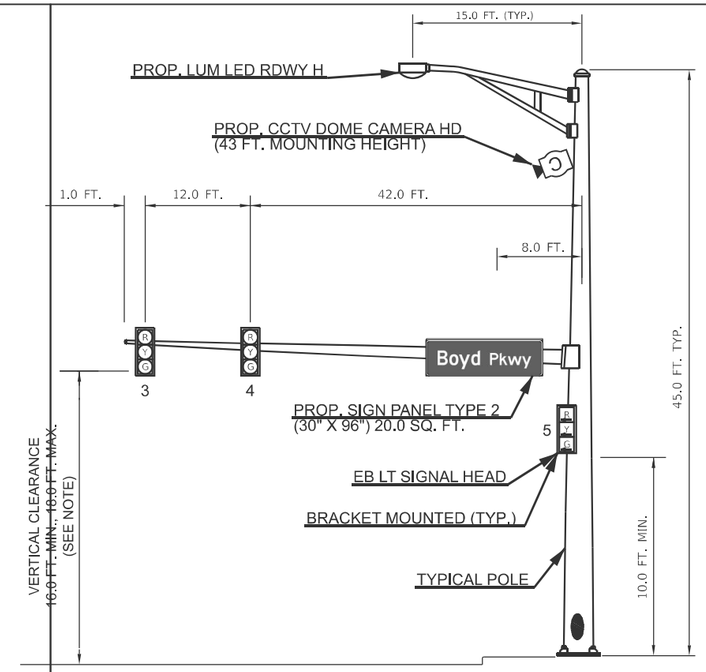

NORTHBOUND TRAFFIC SIGNAL
PROP. MA-2 (55 FT.)
NORTHEAST QUADRANT

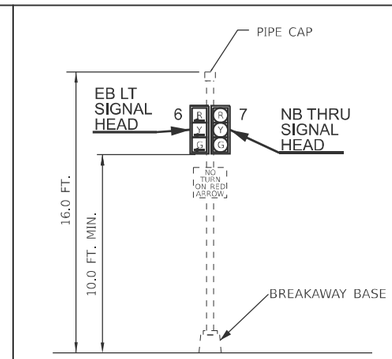

EX. TS-2
US 24 CENTER MEDIAN EAST OF INTERSECTION

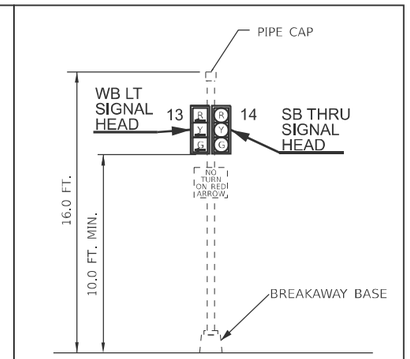

EX. TS-4
US 24 CENTER MEDIAN WEST OF INTERSECTION

NOTES:
1. ONLY ONE OF THE TWO PROPOSED LED LUMINAIRES (INSTALLED 90° APART) IS SHOWN IN THIS DETAIL.
2. THE PROPOSED MAST ARM IS TO BE FURNISHED WITH DUAL LUMINAIRE ARMS.

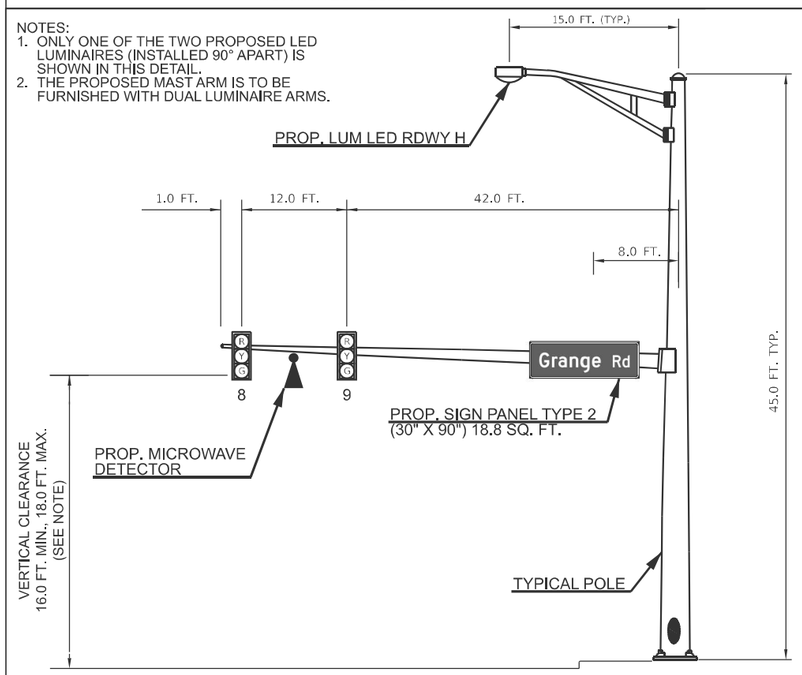

WESTBOUND TRAFFIC SIGNAL
PROP. MA-3 (55 FT.)
SOUTHEAST QUADRANT

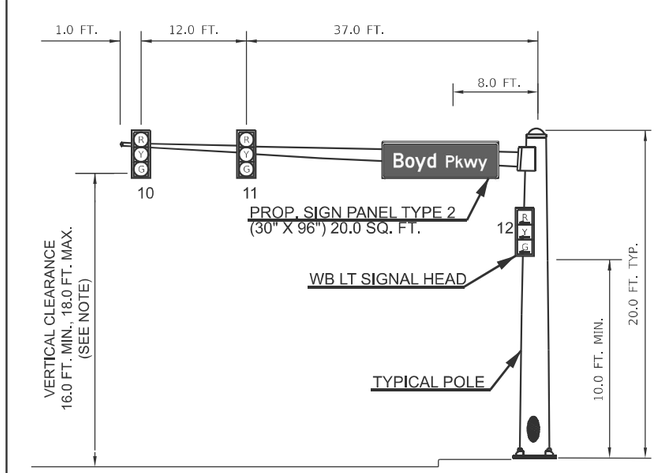

SOUTHBOUND TRAFFIC SIGNAL
PROP. MA-4 (50 FT.)
SOUTHWEST QUADRANT

NOTES:
1. THE VERTICAL CLEARANCE REQUIREMENTS BETWEEN THE BOTTOM OF THE LOWEST SIGNAL HEAD BACKPLATE AND THE HIGHEST POINT OF THE PAVEMENT ARE AS FOLLOWS: 16.0 FT. MINIMUM AND 18.0 FT. MAXIMUM.
2. ALL TRAFFIC SIGNAL SECTIONS SHALL HAVE 12" SINGLE RED LENSES.
3. THE RED SECTIONS OF THE SIGNAL HEADS SHARING THE SAME MAST ARM SHALL BE LEVEL WITH ONE ANOTHER.
4. THE CONTRACTOR SHALL RELOCATE ALL OTHER EXISTING SIGNS FROM THE REMOVED MAST ARMS AND TRAFFIC SIGNAL POSTS TO THE PROPOSED MAST ARMS AND TRAFFIC SIGNAL POSTS. THIS WORK WILL NOT BE PAID FOR SEPERATELY, BUT SHALL BE INCLUDED IN THE COST OF THE PROPOSED ITEMS.
5. THE CONTRACTOR SHALL FURNISH AND INSTALL DUAL 15 FT. LUMINAIRE ARMS FOR THE PROPOSED MAST ARM MA-3. THE COST OF THE LUMINAIRE ARMS SHALL BE INCLUDED IN THE COST OF THE MAST ARM ASSEMBLY.

NOT TO SCALE

MODEL: D8(Sheet) - 10
FILE NAME: c:\pw_work\pwidot\illinois\d0\0806\dms25\ent@illinois.edu\0806253\D468F92-sht-TS.dgn

USER NAME = thevrabusson	DESIGNED -	REVISED -	
	DRAWN -	REVISED -	
	CHECKED -	REVISED -	
PLOT DATE = 5/20/2025	DATE -	REVISED -	

STATE OF ILLINOIS
DEPARTMENT OF TRANSPORTATION

PROPOSED MAST ARM AND TRAFFIC SIGNAL DETAILS
US 24 (BOYD PKWY.) & GRANGE RD.

SCALE: | SHEET 10 OF 17 SHEETS | STA. | TO STA.

F.A.P RTE.	SECTION	COUNTY	TOTAL SHEETS	SHEET NO.
317	17(RS-6,TS-2);18(RS,TS)-2	TAZEWELL	85	69
		CONTRACT NO. 68F92		
		ILLINOIS FED. AID PROJECT		

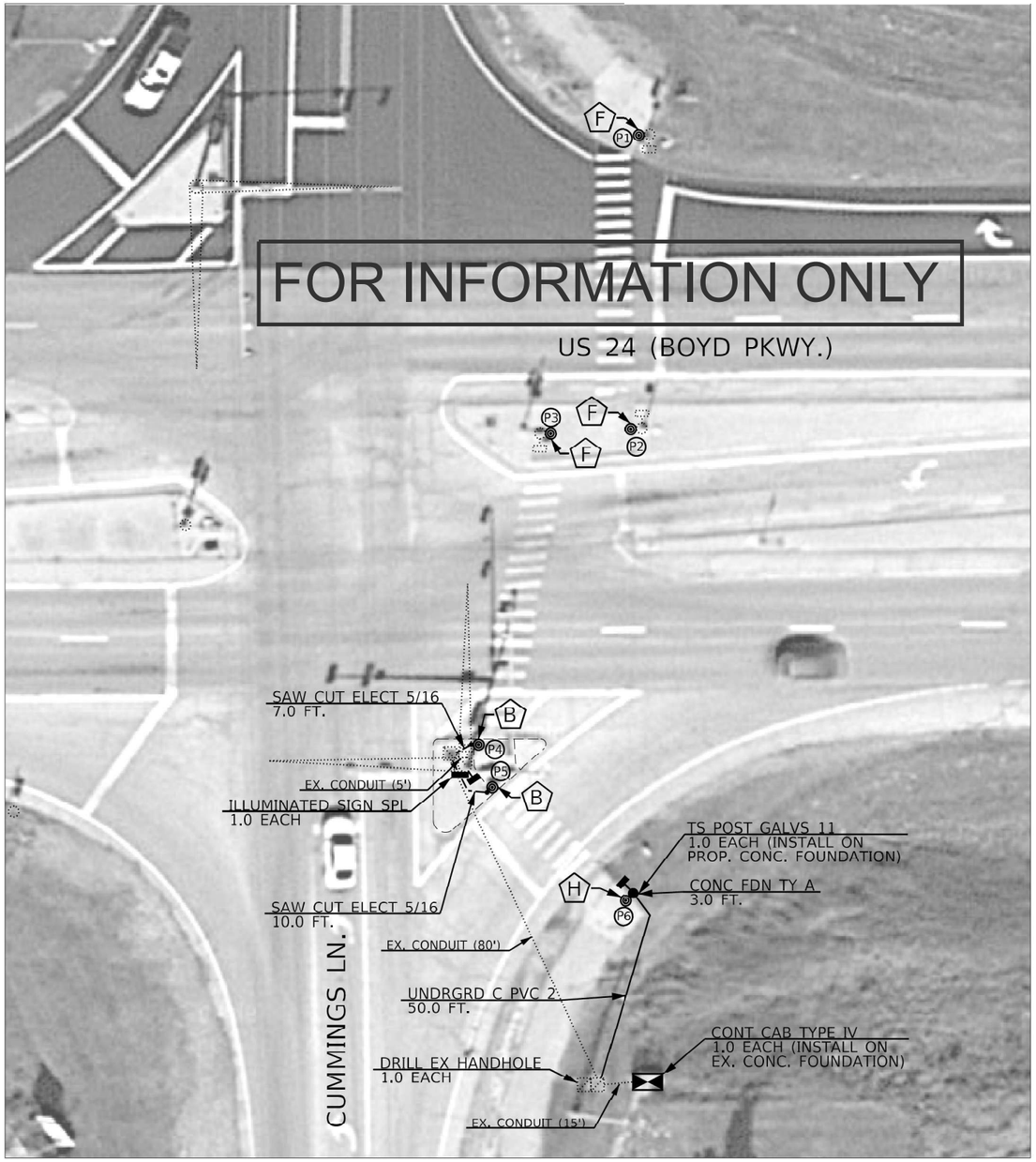

WASHINGTON TOWNSHIP
40.719482, -89.445667

N

~~BILL OF MATERIALS~~		
~~US 24 (BOYD) & CUMMINGS~~		
~~ITEM DESCRIPTION~~	~~UNIT~~	~~QTY.~~
~~ACCESSIBLE PEDESTRIAN SIGNALS~~	~~EACH~~	~~6.0~~
~~PEDESTRIAN PUSH-BUTTON POST (NO FOUNDATION)~~	~~EACH~~	~~2.0~~
~~ANCHOR BOLT SET, 1/2 DIAMETER, WITH WEDGE ANCHORS~~	~~EACH~~	~~2.0~~
~~UNDERGROUND CONDUIT, PVC, 2" DIA.~~	~~FOOT~~	~~50.0~~
~~DRILL EXISTING HANDHOLE~~	~~EACH~~	~~1.0~~
~~TRAFFIC SIGNAL POST, GALVANIZED STEEL 11 FT.~~	~~EACH~~	~~1.0~~
~~CONCRETE FOUNDATION, TYPE A~~	~~FOOT~~	~~3.0~~
~~ELECTRIC CABLE IN CONDUIT, SIGNAL NO. 14 3C~~	~~FOOT~~	~~363.0~~
~~ELECTRIC CABLE IN CONDUIT, SIGNAL NO. 14 5C~~	~~FOOT~~	~~100.0~~
~~ELECTRIC CABLE IN CONDUIT, EQUIPMENT GROUNDING CONDUCTOR, NO. 6 1C~~	~~FOOT~~	~~69.0~~
~~ILLUMINATED SIGN (SPECIAL)~~	~~EACH~~	~~1.0~~
~~SAW CUT FOR ELECTRICAL CABLE INSTALLATION, 5/16"~~	~~FOOT~~	~~17.0~~
~~THHN WIRE ENCASED IN PVC TUBE, NO. 19/27 AWG~~	~~FOOT~~	~~116.0~~
~~TRAFFIC SIGNAL BACKPLATE, RETROREFLECTIVE~~	~~EACH~~	~~2.0~~
~~CONTROLLER CABINET TYPE IV~~	~~EACH~~	~~1.0~~
~~PEDESTRIAN SIGNAL HEAD, POLYCARBONATE, LED, 1-FACE, BRACKET MOUNTED WITH COUNT DOWN TIMER~~	~~EACH~~	~~2.0~~

APS SCHEDULE							
US 24 (BOYD) & CUMMINGS							
LABEL	LOCATION	INSTALLATION TYPE	MOUNTING BRACKET	CROSSING	WALK INDICATION	WIRING NOTES	NOTES
P1	NE QUAD	EX. TS POST	SINGLE	BOYD	TONE	RE-USE EXISTING WIRE	
P2	MEDIAN	EX. TS POST	SINGLE	BOYD	TONE	RE-USE EXISTING WIRE	
P3	MEDIAN	EX. TS POST	SINGLE	BOYD	TONE	RE-USE EXISTING WIRE	
P4	NB RT ISLAND	PROP. PEDESTRIAN PUSHBUTTON POST (NO FOUNDATION)	SINGLE	BOYD	TONE	INSTALL NEW WIRE FROM APS TO EX. MAST ARM AND SPLICE WITH EX. WIRE IN MAST ARM BASE	PROP. SAW CUT FROM PROP. PUSHBUTTON POST TO EX. HANDHOLE
P5	NB RT ISLAND	PROP. PEDESTRIAN PUSHBUTTON POST (NO FOUNDATION)	SINGLE	CUMMINGS RIGHT TURN LANE	TONE	INSTALL NEW WIRE FROM APS TO CONTROLLER	PROP. SAW CUT FROM PROP. PUSHBUTTON POST TO EX. HANDHOLE
P6	SE QUAD	PROP. TS POST	SINGLE	CUMMINGS RIGHT TURN LANE	TONE	INSTALL NEW WIRE FROM APS TO CONTROLLER	PROP. SAW CUT FROM PROP. TS POST TO EX. DOUBLE HANDHOLE

US 24 (BOYD) & CUMMINGS

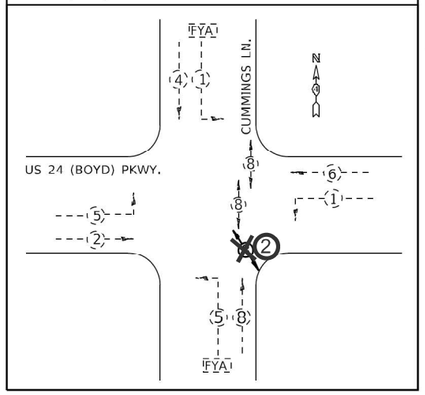

THE CONTRACTOR SHALL FIELD VERIFY PHASE DIAGRAM <u>PRIOR TO</u> ORDERING PROPOSED CONTROLLER CABINET.

PHASE DIAGRAM LEGEND

—#— PROP. PEDESTRIAN PHASE	—#— PROP. VEHICLE PHASE
- -#- - EX. PEDESTRIAN PHASE	- -#- - EX. VEHICLE PHASE

APS LEGEND

A	PROP. APS INSTALLED ON PROP. PEDESTRIAN PUSHBUTTON POST (NO FOUNDATION) ON EX. SIDEWALK, WITH ANCHOR BOLT SET, 1/2 DIAMETER, WITH WEDGE ANCHORS
B	PROP. APS INSTALLED ON PROP. PEDESTRIAN PUSHBUTTON POST (NO FOUNDATION) ON EX. ISLAND SURFACE, WITH ANCHOR BOLT SET, 1/2 DIAMETER, WITH WEDGE ANCHORS
C	PROP. APS INSTALLED ON PROP. PEDESTRIAN PUSHBUTTON POST (NO FOUNDATION) ON EX. SIDEWALK CURB, WITH ANCHOR BOLT SET 1/2 DIAMETER, WITH WEDGE ANCHORS
D	PROP. APS INSTALLED ON PROP. PEDESTRIAN PUSHBUTTON POST (CONCRETE FOUNDATION)
E	PROP. APS INSTALLED ON EX. MAST ARM STRAIN POLE
F	PROP. APS INSTALLED ON EX. TRAFFIC SIGNAL POST OR LIGHT POLE
G	PROP. APS INSTALLED ON EX. PEDESTRIAN PUSHBUTTON POST
H	PROP. APS INSTALLED ON PROP. TRAFFIC SIGNAL POST

NOT TO SCALE

MODEL: Default
FILE NAME: S:\GEN\WINWORD\DESPLAN\Hanson\# APS\68H77 (D4 ADA Pushbuttons 2024-1) (08-22-23).dgn

USER NAME = Trevor.Hanson	DESIGNED -	REVISED -	
	DRAWN -	REVISED -	
PLOT SCALE = 23.8272 ' / in.	CHECKED -	REVISED -	
PLOT DATE = 8/22/2023	DATE -	REVISED -	

STATE OF ILLINOIS
DEPARTMENT OF TRANSPORTATION

PROPOSED ACCESSIBLE PEDESTRIAN SIGNALS
US 24 (BOYD PKWY.) & CUMMINGS LN. - WASHINGTON

SCALE: SHEET OF SHEETS STA. TO STA.

F.A.P. RTE.	SECTION	COUNTY	TOTAL SHEETS	SHEET NO.
VAR.	D4 ADA PUSHBUTTONS 2024-1	TAZEWELL	76	65
		CONTRACT NO. 68H77		
	ILLINOIS FED. AID PROJECT			

MODEL: [illegible] - 11
FILE NAME: c:\pw_work\pwidot\[illegible]\D468F92-sht-TS.dgn

USER NAME = [illegible]	DESIGNED -	REVISED -
	DRAWN -	REVISED -
	CHECKED -	REVISED -
PLOT DATE = [illegible]	DATE -	REVISED -

STATE OF ILLINOIS
DEPARTMENT OF TRANSPORTATION

EXISTING TRAFFIC SIGNAL PLANS
US 24 (BOYD PKWY.) & CUMMINGS LN.

SCALE: SHEET 11 OF 17 SHEETS STA. TO STA.

F.A.P RTE.	SECTION	COUNTY	TOTAL SHEETS	SHEET NO.
317	17(RS-6,TS-2);18(RS,TS)-2	TAZEWELL	85	70
		CONTRACT NO. 68F92		
	ILLINOIS FED. AID PROJECT			

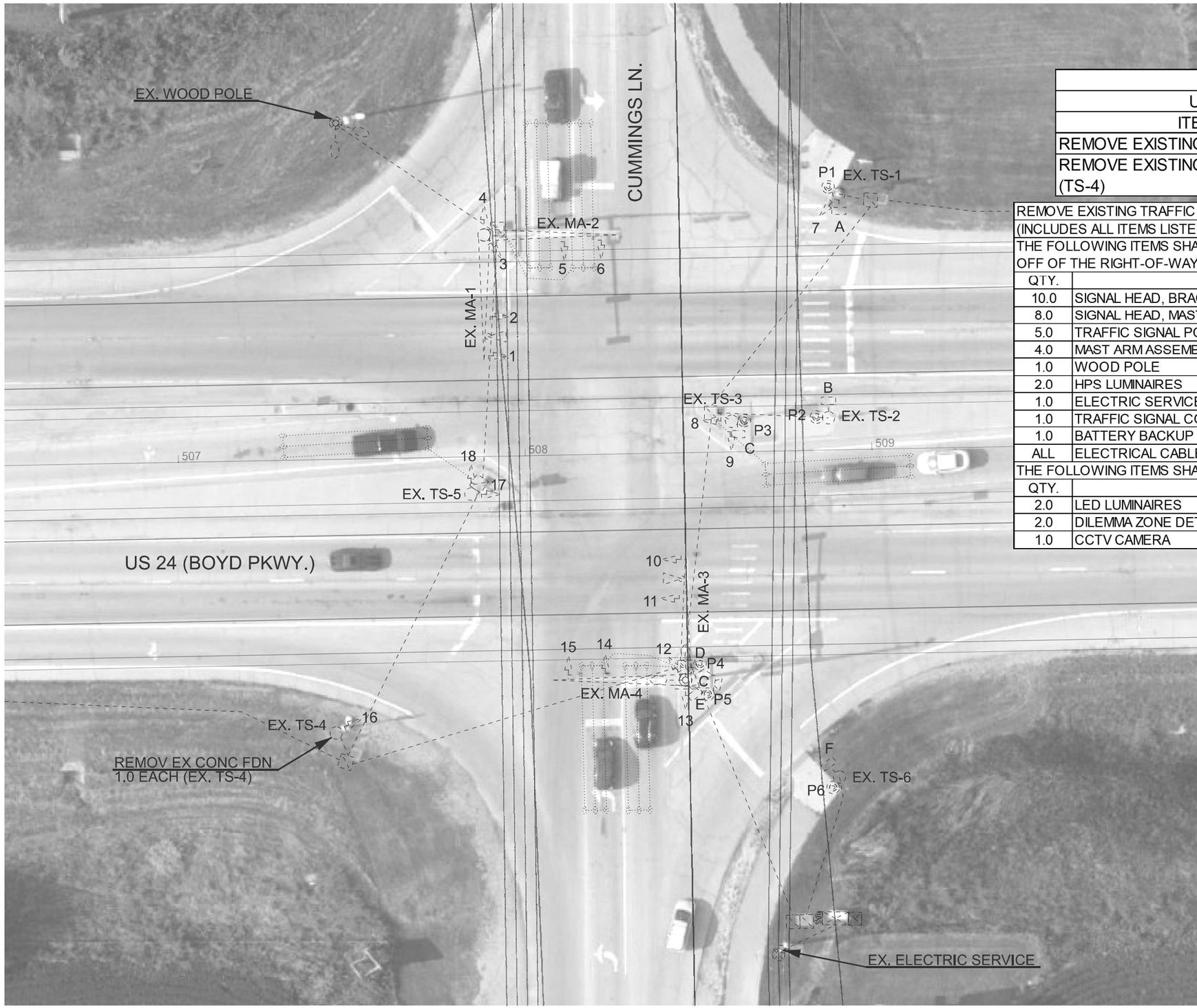

BILL OF MATERIALS		
US 24 & CUMMINGS LN. - REMOVAL		
ITEM DESCRIPTION	UNIT	QTY.
REMOVE EXISTING TRAFFIC SIGNAL EQUIPMENT	EACH	1.0
REMOVE EXISTING CONCRETE FOUNDATION (TS-4)	EACH	1.0

REMOVE EXISTING TRAFFIC SIGNAL EQUIPMENT - QTY. 1.0 EACH
(INCLUDES ALL ITEMS LISTED BELOW)

THE FOLLOWING ITEMS SHALL BE REMOVED AND DISPOSED OF BY THE CONTRACTOR OFF OF THE RIGHT-OF-WAY:

QTY.	ITEM DESCRIPTION
10.0	SIGNAL HEAD, BRACKET MOUNTED (SIGNAL HEADS 3, 4, 7, 8, 9, 12, 13, 16, 17, 18)
8.0	SIGNAL HEAD, MAST ARM MOUNTED (SIGNAL HEADS 1, 2, 5, 6, 10, 11, 14, 15)
5.0	TRAFFIC SIGNAL POST (TS-1, TS-2, TS-3, TS-4, TS-5)
4.0	MAST ARM ASSEMBLY AND POLE (MA-1, MA-2, MA-3, MA-4)
1.0	WOOD POLE
2.0	HPS LUMINAIRES
1.0	ELECTRIC SERVICE
1.0	TRAFFIC SIGNAL CONTROLLER CABINET
1.0	BATTERY BACKUP SYSTEM
ALL	ELECTRICAL CABLE NOT USED IN PROPOSED PLANS

THE FOLLOWING ITEMS SHALL BE REMOVED AND DELIVERED TO THE IDOT TRAFFIC

QTY.	ITEM DESCRIPTION
2.0	LED LUMINAIRES
2.0	DILEMMA ZONE DETECTION SYSTEM (2 SENSORS AND ALL CABINET EQUIPMENT)
1.0	CCTV CAMERA

TRAFFIC SIGNALS LEGEND

- EX. MAST ARM ASSEMBLY
- EX. TRAFFIC SIGNAL CONTROLLER
- EX. BATTERY BACKUP SYSTEM
- EX. ELECTRIC SERVICE INSTALLATION
- EX. HANDHOLE
- EX. DOUBLE HANDHOLE
- EX. WOOD POLE
- EX. TRAFFIC SIGNAL POST
- EX. SIGNAL HEAD WITH BACKPLATE
- EX. CCTV CAMERA
- EX. MICROWAVE VEHICLE DETECTOR
- EX. ROADWAY LUMINAIRE
- EX. QUADRAPOLE DETECTOR LOOP
- EX. CONDUIT
- EX. PEDESTRIAN SIGNAL HEAD
- EX. ACCESSIBLE PEDESTRIAN SIGNAL (APS)
- EX. AERIAL UTILITIES

NOT TO SCALE

MODEL: D68F92sheet1 - 12
FILE NAME: c:\pw_work\pwidot\illinois\dpu\0938f664\d0938f664d03.dgn

USER NAME = thevoladuson	DESIGNED -	REVISED -	
	DRAWN -	REVISED -	
	CHECKED -	REVISED -	
PLOT DATE = 5/20/2025	DATE -	REVISED -	

STATE OF ILLINOIS
DEPARTMENT OF TRANSPORTATION

EXISTING TRAFFIC SIGNAL PLANS & REMOVAL ITEMS
US 24 (BOYD PKWY.) & CUMMINGS LN.

SCALE: SHEET 12 OF 17 SHEETS STA. TO STA.

F.A.P RTE.	SECTION	COUNTY	TOTAL SHEETS	SHEET NO.
317	17(RS-6,TS-2);18(RS,TS)-2	TAZEWELL	85	71
		CONTRACT NO. 68F92		
		ILLINOIS	FED. AID PROJECT	

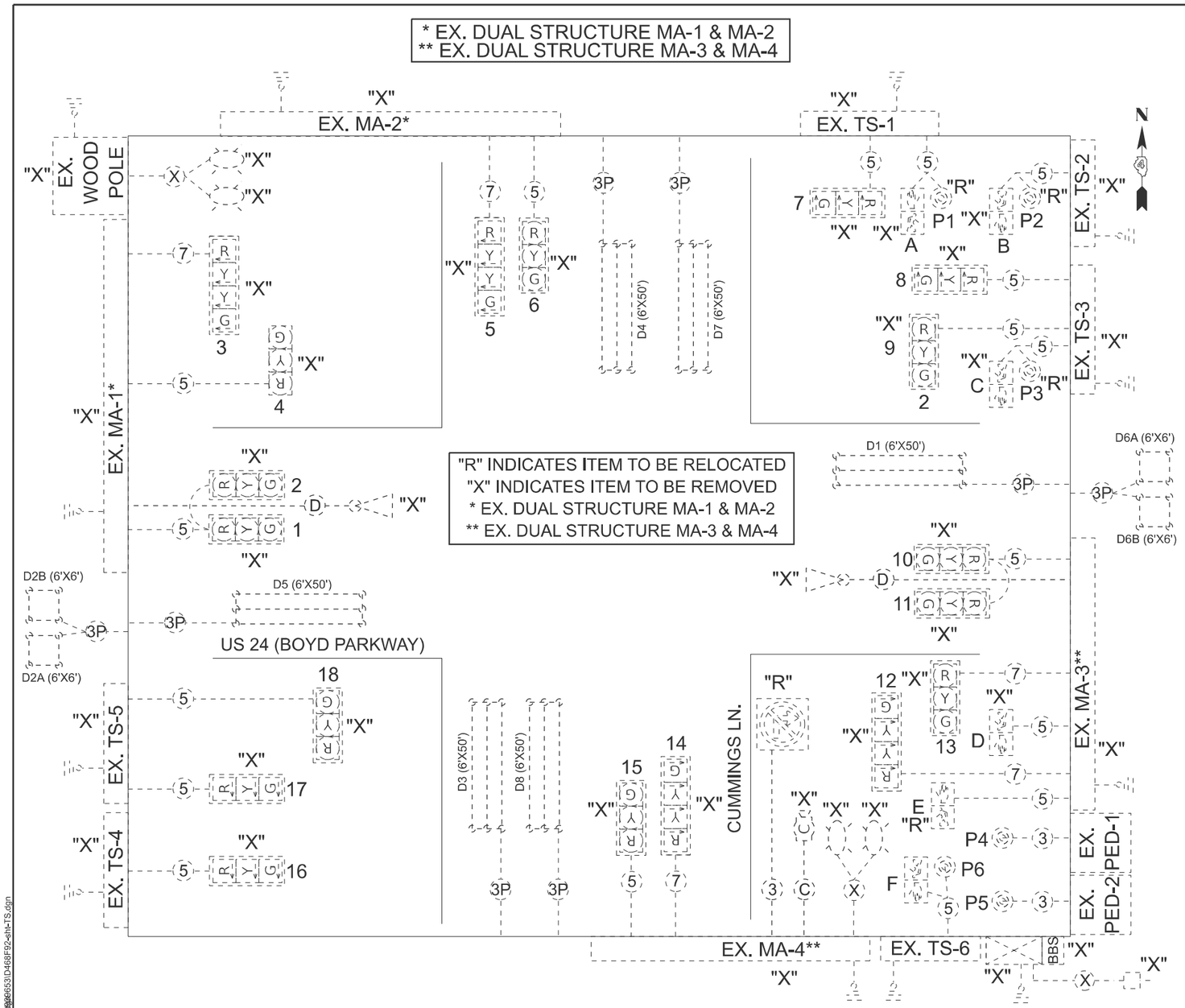

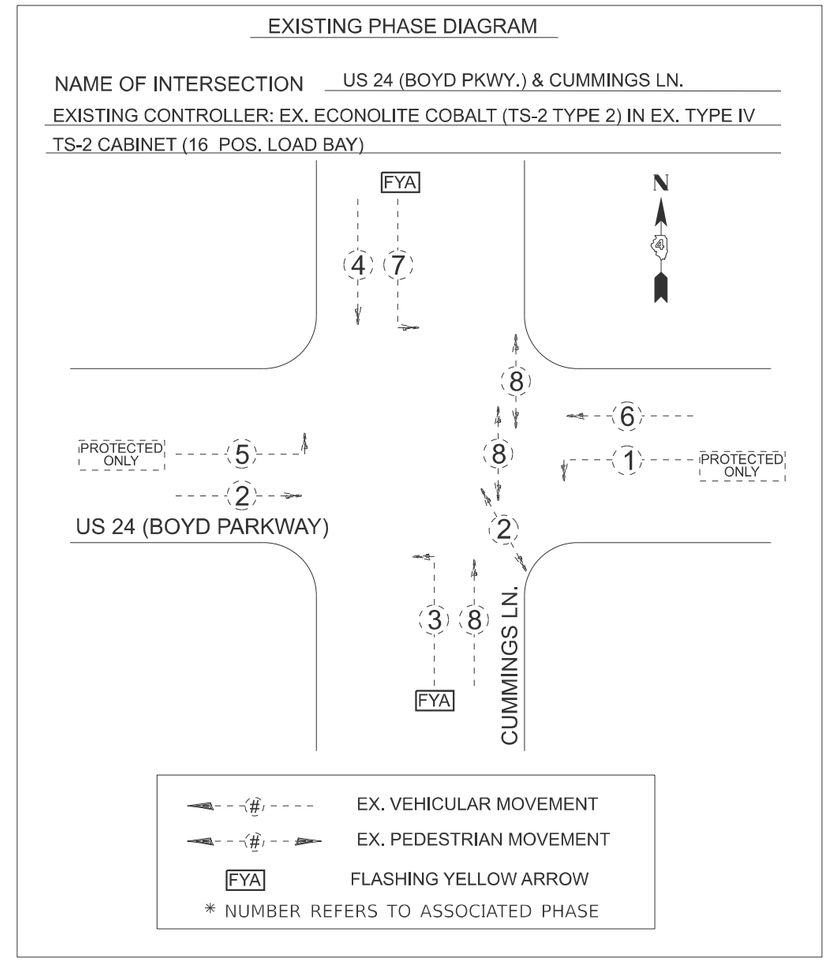

TRAFFIC SIGNALS LEGEND

- EX. TRAFFIC SIGNAL CONTROLLER CABINET
- EX. BATTERY BACKUP SYSTEM
- EX. ELECTRIC SERVICE
- EX. GROUND/SAFETY BOND
- EX. QUADRAPOLE DETECTOR LOOP
- EX. DETECTOR LOOP
- EX. 3 SEC. SIGNAL HEAD WITH BACKPLATE
- EX. 3 SEC. SIGNAL HEAD WITHOUT BACKPLATE
- EX. ROADWAY LUMINAIRE (RELOCATED)
- EX. CCTV CAMERA
- EX. MICROWAVE VEHICLE DETECTOR (RELOCATED)
- EX. 5/C NO. 14 SIGNAL CABLE
- EX. 7/C NO. 14 SIGNAL CABLE
- EX. 1/C NO. 6 CABLE
- EX. CAT 5 ETHERNET CABLE
- EX. MICROWAVE DETECTOR CABLE

NOT TO SCALE

MODEL: D18(Sheet) - 13
FILE NAME: c:\pw_work\pwidot\illinois\d0\0989\dms25\sig\dms0989d53\D468F92-sht-TS.dgn

USER NAME = thevrabusson	DESIGNED -	REVISED -	STATE OF ILLINOIS DEPARTMENT OF TRANSPORTATION
	DRAWN -	REVISED -	
	CHECKED -	REVISED -	
PLOT DATE = 5/20/2025	DATE -	REVISED -	

EXISTING CABLE AND PHASE DIAGRAM
US 24 (BOYD PKWY.) & CUMMINGS LN.

SCALE: | SHEET 13 OF 17 SHEETS | STA. | TO STA.

F.A.P RTE.	SECTION	COUNTY	TOTAL SHEETS	SHEET NO.
317	17(RS-6,TS-2);18(RS,TS)-2	TAZEWELL	85	72

CONTRACT NO. 68F92

ILLINOIS | FED. AID PROJECT

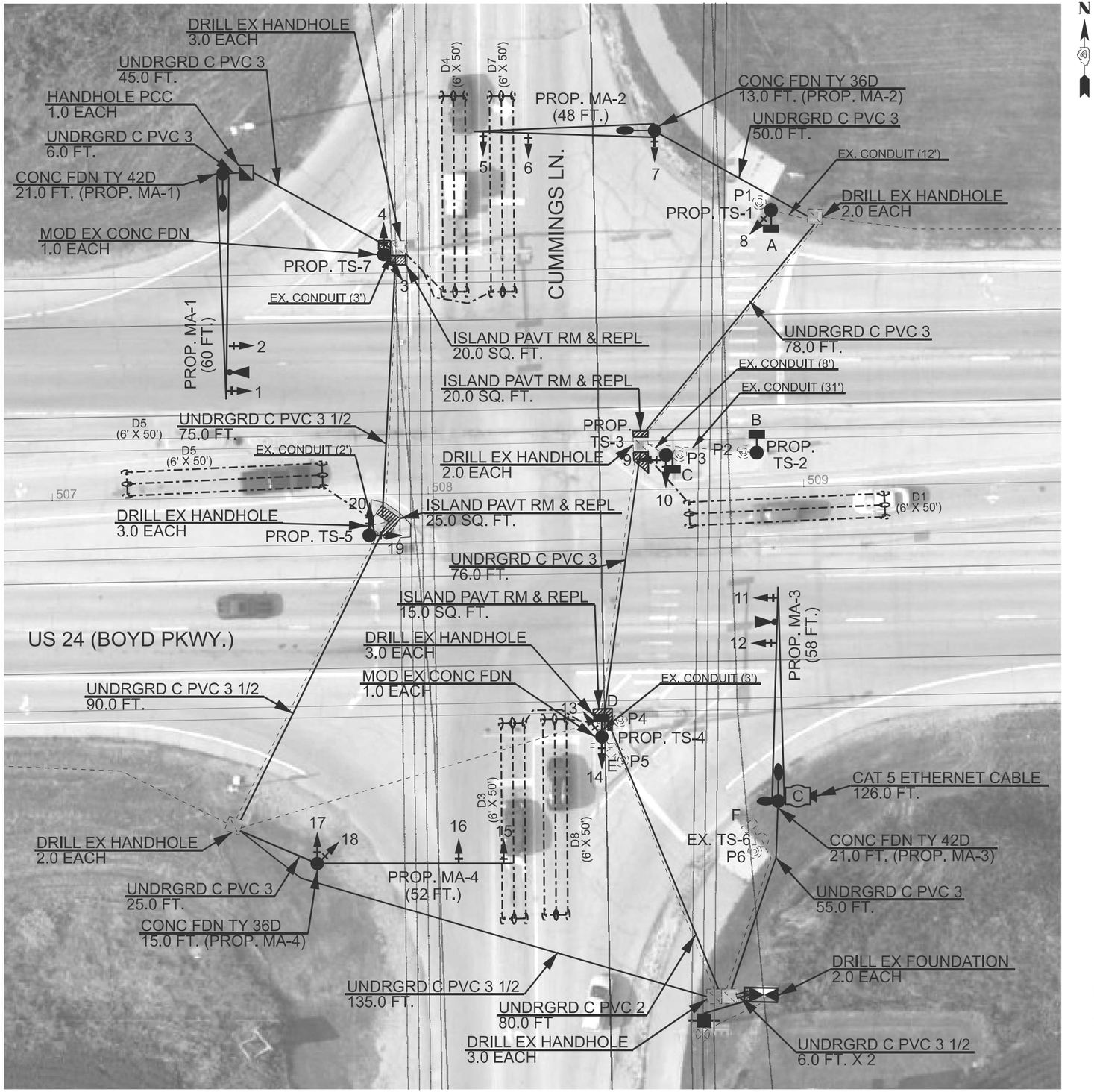

DETECTOR LOOP SCHEDULE					
US 24 & CUMMINGS LN.					
DETECTOR LOOP	TYPE	ASSIGNED PHASE	DETECTOR LOOP, TYPE I	ELECTRIC CABLE IN CONDUIT, LEAD-IN, NO. 12, 1 PAIR	INDUCTION LOOP DETECTOR AMPLIFIER
			QTY. (FOOT)	QTY. (FOOT)	QTY. (EACH)
D1	6' X 50' (QUAD)	1	173.0	200.0	1.0
D3	6' X 50' (QUAD)	1	182.0	117.5	1.0
D4	6' X 50' (QUAD)	4	171.0	350.5	1.0
D5	6' X 50' (QUAD)	5	169.0	278.0	1.0
D7	6' X 50' (QUAD)	8	186.0	350.5	1.0
D8	6' X 50' (QUAD)	8	168.0	117.5	1.0
TOTAL			**1049.0**	**1414.0**	**6.0**

BILL OF MATERIALS		
US 24 & CUMMINGS LN. - PROPOSED (AT AND BELOW GRADE)		
ITEM DESCRIPTION	UNIT	QTY.
UNDERGROUND CONDUIT, PVC, 2" DIA.	FOOT	80.0
UNDERGROUND CONDUIT, PVC, 3" DIA.	FOOT	335.0
UNDERGROUND CONDUIT, PVC, 3 1/2" DIA.	FOOT	312.0
HANDHOLE, PORTLAND CEMENT CONCRETE	EACH	1.0
ELECTRIC CABLE IN CONDUIT, 600V (XLP-TYPE USE) 1/C NO. 10	FOOT	2165.0
ELECTRIC CABLE IN CONDUIT, SIGNAL NO. 14 3C	FOOT	130.5
ELECTRIC CABLE IN CONDUIT, SIGNAL NO. 14 5C	FOOT	5010.0
ELECTRIC CABLE IN CONDUIT, SIGNAL NO. 14 7C	FOOT	1158.0
ELECTRIC CABLE IN CONDUIT, LEAD-IN, NO. 18 3 PAIR	FOOT	1414.0
ELECTRIC CABLE IN CONDUIT, EQUIPMENT GROUNDING CONDUCTOR, NO. 6 1C	FOOT	925.5
CONCRETE FOUNDATION, TYPE E 36-INCH DIAMETER	FOOT	28.0
CONCRETE FOUNDATION, TYPE E 42-INCH DIAMETER	FOOT	42.0
DRILL EXISTING FOUNDATION	EACH	1.0
DRILL EXISTING HANDHOLE	EACH	18.0
INDUCTION LOOP DETECTOR AMPLIFIER	EACH	6.0
DETECTOR LOOP, TYPE I	FOOT	1049.0
MODIFY EXISTING CONCRETE FOUNDATION	EACH	2.0
CAT 5 ETHERNET CABLE	FOOT	126.0
ISLAND PAVEMENT REMOVAL AND REPLACEMENT	SQ FT	80.0

TRAFFIC SIGNALS LEGEND

- PROP. MAST ARM ASSEMBLY (COMBINATION)
- PROP. MAST ARM ASSEMBLY
- PROP. TRAFFIC SIGNAL CONTROLLER CABINET
- PROP. BATTERY BACKUP SYSTEM
- PROP. ELECTRIC SERVICE INSTALLATION
- EX. HANDHOLE
- EX. WOOD POLE
- EX. TRAFFIC SIGNAL POST
- PROP. TRAFFIC SIGNAL POST
- EX. SIGNAL HEAD WITH BACKPLATE
- PROP. SIGNAL HEAD WITH BACKPLATE
- PROP. CCTV CAMERA
- PROP. MICROWAVE VEHICLE DETECTOR
- PROP. ROADWAY LUMINAIRE
- PROP. QUADRAPOLE DETECTOR LOOP
- EX. CONDUIT
- PROP. CONDUIT
- EX. PEDESTRIAN SIGNAL HEAD
- PROP. PEDESTRIAN SIGNAL HEAD
- EX. ACCESSIBLE PEDESTRIAN SIGNAL (APS)
- EX. AERIAL UTILITIES

NOTES:
1. THE CONTRACTOR SHALL COORDINATE WORK WITH IDOT CONTRACT 68H77.
2. THE PROPOSED TRAFFIC SIGNAL POST (TS-4) SHALL BE INSTALLED ON THE MODIFIED CONCRETE FOUNDATION ON THE SAME DAY THAT THE EXISTING MAST ARM MA-3/MA-4 IS REMOVED.

NOT TO SCALE

MODEL: D68F92-sht-14
FILE NAME: c:\pw_work\pwidot\illinois\dot\d0968f92\Sheets\D68F92-sht-TS.dgn

USER NAME = thevealsson	DESIGNED -	REVISED -	
	DRAWN -	REVISED -	
	CHECKED -	REVISED -	
PLOT DATE = 5/20/2025	DATE -	REVISED -	

STATE OF ILLINOIS
DEPARTMENT OF TRANSPORTATION

PROPOSED TRAFFIC SIGNAL PLANS (AT AND BELOW GRADE)
US 24 (BOYD PKWY.) & CUMMINGS LN.

SCALE: | SHEET 14 OF 17 SHEETS | STA. | TO STA.

F.A.P RTE.	SECTION	COUNTY	TOTAL SHEETS	SHEET NO.
317	17(RS-6,TS-2);18(RS,TS)-2	TAZEWELL	85	73
		CONTRACT NO. 68F92		
		ILLINOIS FED. AID PROJECT		

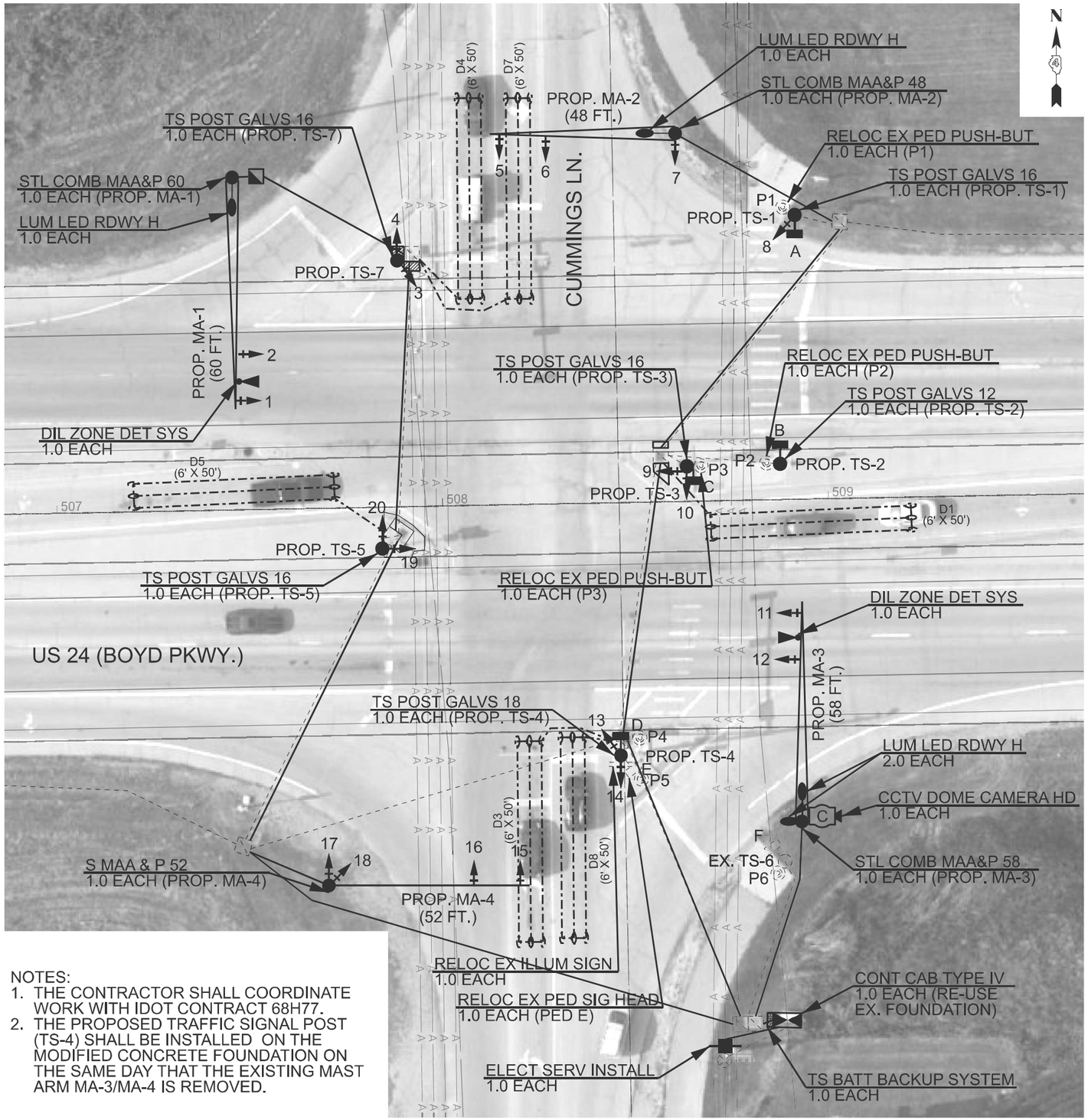

NOTES:
1. THE CONTRACTOR SHALL COORDINATE WORK WITH IDOT CONTRACT 68H77.
2. THE PROPOSED TRAFFIC SIGNAL POST (TS-4) SHALL BE INSTALLED ON THE MODIFIED CONCRETE FOUNDATION ON THE SAME DAY THAT THE EXISTING MAST ARM MA-3/MA-4 IS REMOVED.

BILL OF MATERIALS		
US 24 & CUMMINGS LN. - PROPOSED (ABOVE GRADE)		
ITEM DESCRIPTION	UNIT	QTY.
SIGN PANEL - TYPE 1	SQ FT	10.0
SIGN PANEL - TYPE 2	SQ FT	82.6
ELECTRIC SERVICE INSTALLATION	EACH	1.0
LUMINAIRE, LED, ROADWAY, OUTPUT DESIGNATION H	EACH	4.0
CONTROLLER CABINET TYPE IV	EACH	1.0
TRAFFIC SIGNAL POST, GALVANIZED STEEL 12 FT.	EACH	1.0
TRAFFIC SIGNAL POST, GALVANIZED STEEL 16 FT.	EACH	4.0
TRAFFIC SIGNAL POST, GALVANIZED STEEL 18 FT.	EACH	1.0
STEEL MAST ARM ASSEMBLY AND POLE, 52 FT.	EACH	1.0
STEEL COMBINATION MAST ARM ASSEMBLY AND POLE 48 FT.	EACH	1.0
STEEL COMBINATION MAST ARM ASSEMBLY AND POLE 58 FT.	EACH	1.0
STEEL COMBINATION MAST ARM ASSEMBLY AND POLE 60 FT.	EACH	1.0
SIGNAL HEAD, POLYCARBONATE, LED, 1-FACE, 3-SECTION, BRACKET MOUNTED	EACH	10.0
SIGNAL HEAD, POLYCARBONATE, LED, 1-FACE, 3-SECTION, MAST ARM MOUNTED	EACH	6.0
SIGNAL HEAD, POLYCARBONATE, LED, 1-FACE, 4-SECTION, BRACKET MOUNTED	EACH	2.0
SIGNAL HEAD, POLYCARBONATE, LED, 1-FACE, 4-SECTION, MAST ARM MOUNTED	EACH	2.0
PEDESTRIAN SIGNAL HEAD, POLYCARBONATE, LED, 1-FACE, BRACKET MOUNTED WITH COUNT DOWN TIMER	EACH	4.0
TRAFFIC SIGNAL BACKPLATE	EACH	20.0
RELOCATE EXISTING PEDESTRIAN SIGNAL HEAD	EACH	1.0
RELOCATE EXISTING ILLUMINATED SIGN	EACH	1.0
RELOCATE EXISTING PEDESTRIAN PUSH-BUTTON	EACH	3.0
CLOSED CIRCUIT TELEVISION DOME CAMERA, HD	EACH	1.0
DILEMMA ZONE DETECTION SYSTEM	EACH	2.0
TRAFFIC SIGNAL BATTERY BACKUP SYSTEM	EACH	1.0

MAST ARM AND TRAFFIC SIGNAL POST SCHEDULE						
US 24 (BOYD PKWY.) & CUMMINGS LN.						
NAME	DESCRIPTION	LENGTH	FOUNDATION DETAILS			LOCATION
			DIAMETER	TYPE	DEPTH	
MA-1	COMB. MAA&P	60 FT.	42 IN.	E	21 FT.	NW QUAD
MA-2	COMB. MAA&P	48 FT.	36 IN.	E	13 FT.	NE QUAD
MA-3	COMB. MAA&P	58 FT.	42 IN.	E	21 FT.	SE QUAD
MA-4	MAA&P	52 FT.	36 IN.	E	15 FT.	SW QUAD
TS-1	TS POST	16 FT.	INSTALL ON EX. FOUNDATION			NE QUAD
TS-2	TS POST	12 FT.	INSTALL ON EX. FOUNDATION			MEDIAN EAST OF INTERSECTION
TS-3	TS POST	16 FT.	INSTALL ON EX. FOUNDATION			MEDIAN EAST OF INTERSECTION
TS-4	TS POST	18 FT.	INSTALL ON MODIFIED CONC. FOUNDATION			SE CORNER ISLAND
TS-5	TS POST	16 FT.	INSTALL ON EX. FOUNDATION			MEDIAN WEST OF INTERSECTION
TS-7	TS POST	16 FT.	INSTALL ON MODIFIED CONC. FOUNDATION			NW CORNER ISLAND

TRAFFIC SIGNAL HEAD SCHEDULE			
US 24 (BOYD PKWY.) & CUMMINGS LN.			
PROP. QTY.	UNIT	ITEM	LOCATION
10.0	EACH	SH P LED 1F 3S BM	4,7,8,9,10,14,17,18,19,20
6.0	EACH	SH P LED 1F 3S MAM	1,2,6,11,12,16
2.0	EACH	SH P LED 1F 4S BM	3,13
2.0	EACH	SH P LED 1F 4S MAM	5,15
4.0	EACH	PED SH P LED 1F BM CT	A,B,C,D
20.0	EACH	TS BACKPLATE	1,2,3,4,5,6,7,8,9,10,11,12,13,14, 15,16,17,18,19,20

TRAFFIC SIGNALS LEGEND

- PROP. MAST ARM ASSEMBLY (COMBINATION)
- PROP. MAST ARM ASSEMBLY
- PROP. TRAFFIC SIGNAL CONTROLLER CABINET
- PROP. BATTERY BACKUP SYSTEM
- PROP. ELECTRIC SERVICE INSTALLATION
- EX. HANDHOLE
- EX. WOOD POLE
- EX. TRAFFIC SIGNAL POST
- PROP. TRAFFIC SIGNAL POST
- EX. SIGNAL HEAD WITH BACKPLATE
- PROP. SIGNAL HEAD WITH BACKPLATE
- PROP. CCTV CAMERA
- PROP. MICROWAVE VEHICLE DETECTOR
- PROP. ROADWAY LUMINAIRE
- PROP. QUADRAPOLE DETECTOR LOOP
- EX. CONDUIT
- PROP. CONDUIT
- EX. PEDESTRIAN SIGNAL HEAD
- PROP. PEDESTRIAN SIGNAL HEAD
- EX. ACCESSIBLE PEDESTRIAN SIGNAL (APS)
- EX. AERIAL UTILITIES

NOT TO SCALE

MODEL: Default
FILE NAME: c:\pw_work\pwidot\hanson\d0939664\Signals Complete.dgn

USER NAME = trevor.hanson	DESIGNED -	REVISED -
	DRAWN -	REVISED -
	CHECKED -	REVISED -
PLOT DATE = 1/7/2025	DATE -	REVISED -

STATE OF ILLINOIS
DEPARTMENT OF TRANSPORTATION

PROPOSED TRAFFIC SIGNAL PLANS (ABOVE GRADE)
US 24 (BOYD PKWY.) & CUMMINGS LN.

SCALE: SHEET OF SHEETS STA. TO STA.

F.A. RTE.	SECTION	COUNTY	TOTAL SHEETS	SHEET NO.
317	17(RS-6,TS-2);18(RS,TS)-2	TAZEWELL	85	74
		CONTRACT NO.		
		ILLINOIS FED. AID PROJECT		

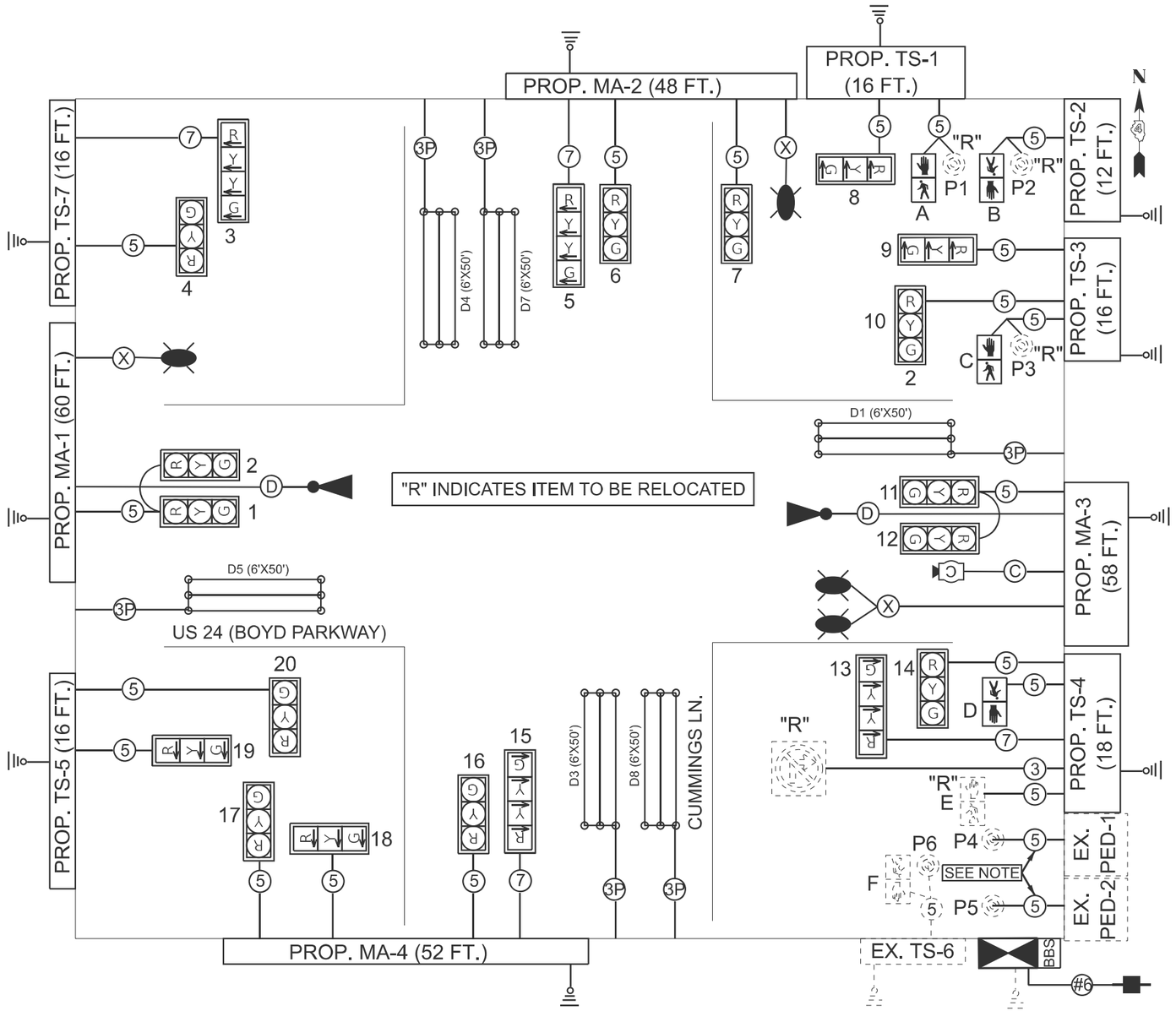

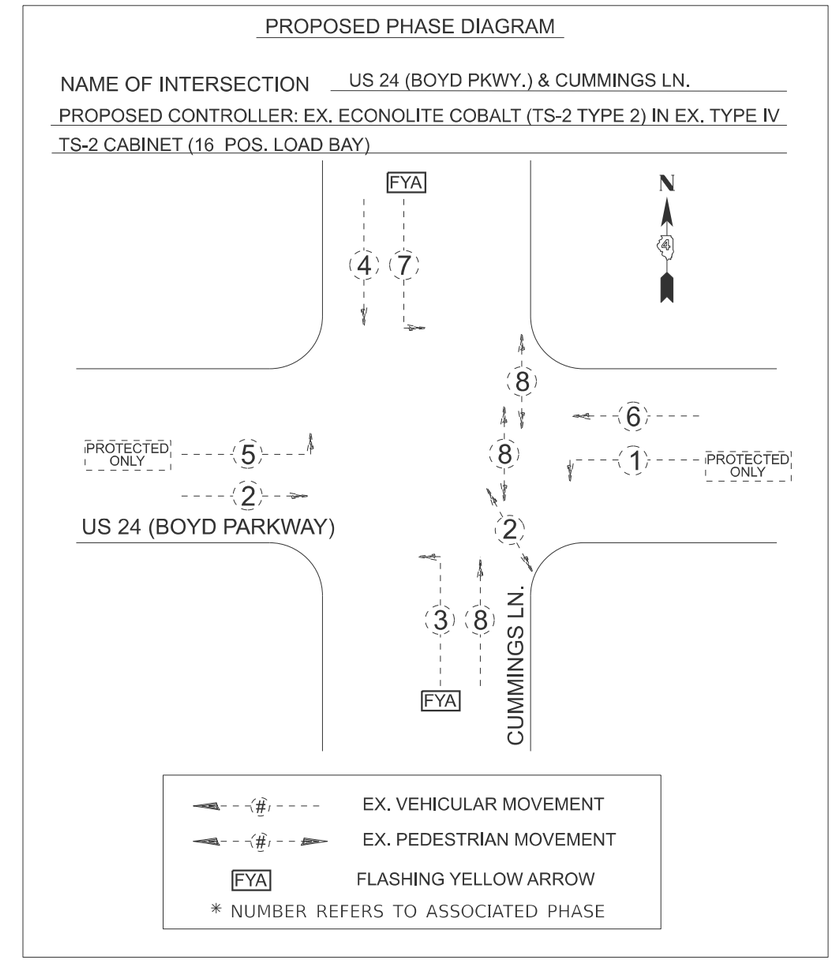

NOTES:
1. THE CONTRACTOR SHALL COORDINATE WORK WITH IDOT CONTRACT 68H77.
2. THE CONTRACTOR SHALL INSTALL ONE (1) 5/C CABLE FROM THE CONTROLLER CABINET TO THE BASE OF THE PROPOSED TS-4. THE CONTRACTOR SHALL CONNECT THE EXISTING SAW CUT WIRING FROM THE APS (P4 AND P5) TO THE PROPOSED 5/C CABLE.

TRAFFIC SIGNALS LEGEND

- PROP. TRAFFIC SIGNAL CONTROLLER CABINET
- PROP. BATTERY BACKUP SYSTEM
- PROP. ELECTRIC SERVICE
- EX. GROUND/SAFETY BOND
- PROP. GROUND/SAFETY BOND
- EX. QUADRAPOLE DETECTOR LOOP
- EX. 3-SECTION SIGNAL HEAD WITH BACKPLATE
- PROP. 3-SECTION SIGNAL HEAD WITH BACKPLATE
- PROP. LED ROADWAY LUMINAIRE
- PROP. CCTV CAMERA
- PROP. MICROWAVE VEHICLE DETECTOR
- (3) PROP. 3/C NO. 14 SIGNAL CABLE
- (5) PROP. 5/C NO. 14 SIGNAL CABLE
- (7) PROP. 7/C NO. 14 SIGNAL CABLE
- (X) PROP. 1/C NO. 10 CABLE
- (C) PROP. CAT 5 ETHERNET CABLE
- (D) PROP. MICROWAVE DETECTOR CABLE
- (V) PROP. VIDEO DETECTION CABLE
- (3P) PROP. LEAD-IN, NO. 18, 3-PAIR
- (#6) PROP. 1/C NO. 6 CABLE

NOT TO SCALE

MODEL: D68F92-sht-TS
FILE NAME: c:\pw_work\pwidot\dlamse\d0\D68F92\sht\D468F92-sht-TS.dgn

USER NAME = thevealsson	DESIGNED -	REVISED -	STATE OF ILLINOIS DEPARTMENT OF TRANSPORTATION
	DRAWN -	REVISED -	
	CHECKED -	REVISED -	
PLOT DATE = 5/7/2025	DATE -	REVISED -	

PROPOSED CABLE AND PHASE DIAGRAM
US 24 (BOYD PKWY.) & CUMMINGS LN.

SCALE: | SHEET 16 OF 17 SHEETS | STA. | TO STA.

F.A.P RTE.	SECTION	COUNTY	TOTAL SHEETS	SHEET NO.
317	17(RS-6,TS-2);18(RS,TS)-2	TAZEWELL	85	75
		CONTRACT NO. 68F92		
		ILLINOIS	FED. AID PROJECT	

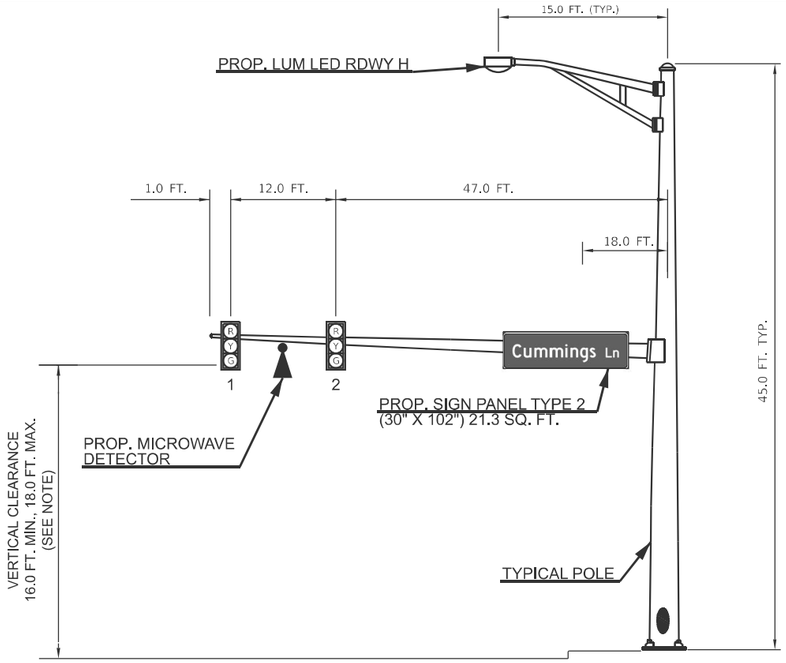

WESTBOUND TRAFFIC SIGNAL
PROP. MA-1 (60 FT.)
NORTHWEST QUADRANT

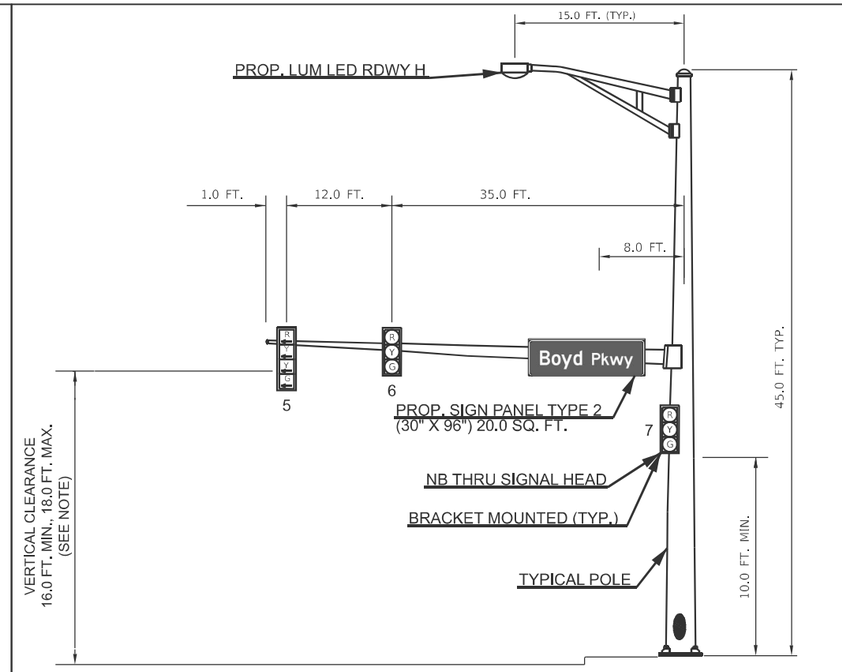

NORTHBOUND TRAFFIC SIGNAL
PROP. MA-2 (48 FT.)
NORTHEAST QUADRANT

NOTES:
1. ONLY ONE OF THE TWO PROPOSED LED LUMINAIRES (INSTALLED 90° APART) IS SHOWN IN THIS DETAIL.
2. THE PROPOSED MAST ARM IS TO BE FURNISHED WITH TWO LUMINAIRE ARMS (ONE 15 FT. AND ONE 2 FT.)

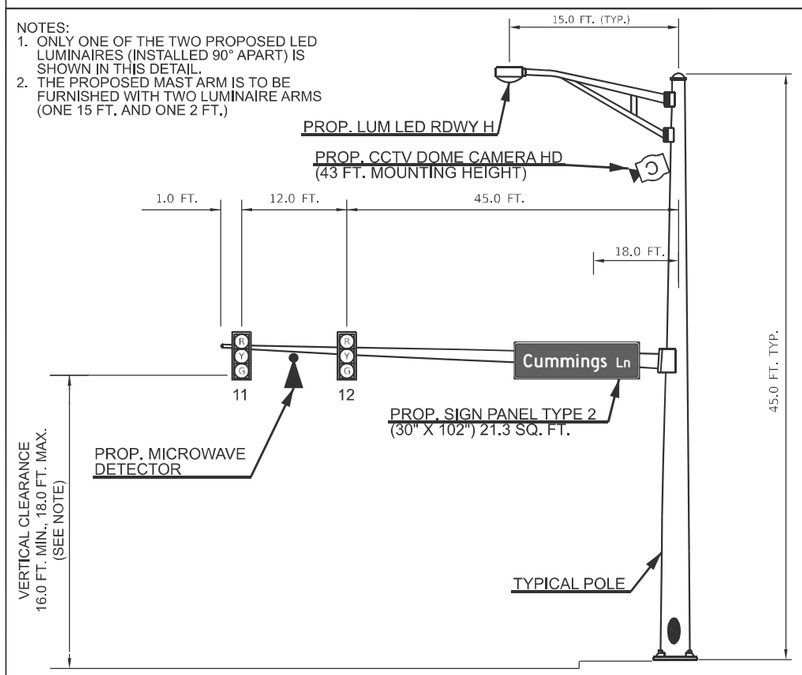

WESTBOUND TRAFFIC SIGNAL
PROP. MA-3 (58 FT.)
SOUTHEAST QUADRANT

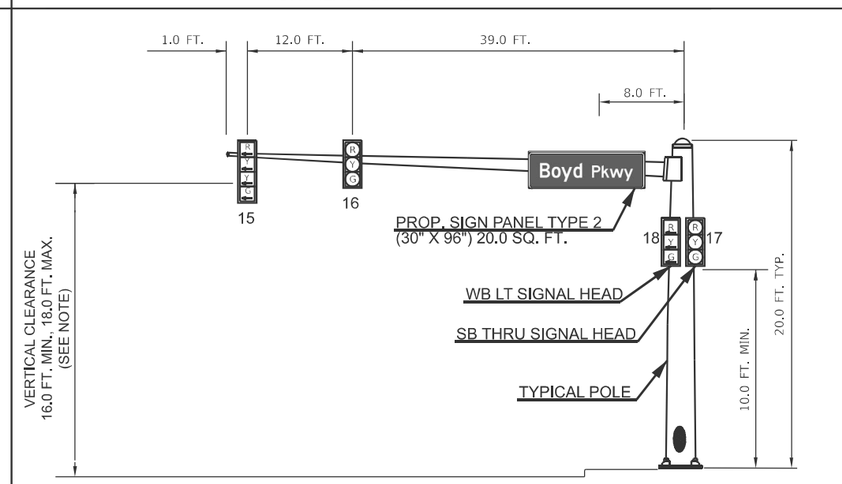

SOUTHBOUND TRAFFIC SIGNAL
PROP. MA-4 (52 FT.)
SOUTHWEST QUADRANT

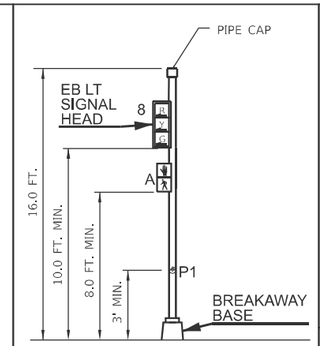

PROP. TS-1 (16 FT.)
INSTALL ON EX. FOUNDATION
NORTHEAST QUADRANT

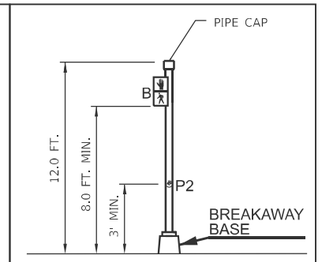

PROP. TS-2 (12 FT.)
INSTALL ON EX. FOUNDATION
MEDIAN EAST OF INTERSECTION

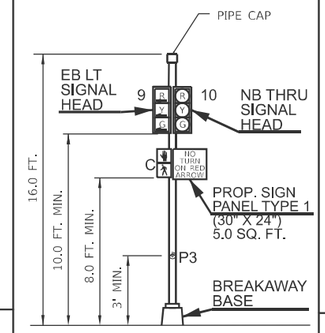

PROP. TS-3 (16 FT.)
INSTALL ON EX. FOUNDATION
MEDIAN EAST OF INTERSECTION

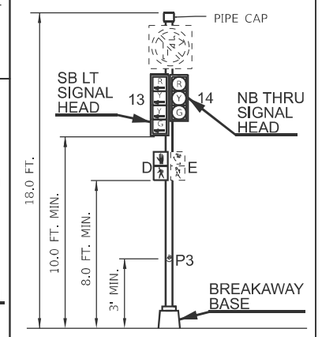

PROP. TS-4 (18 FT.)
INSTALL ON MOD. FOUNDATION
SOUTHEAST CORNER ISLAND

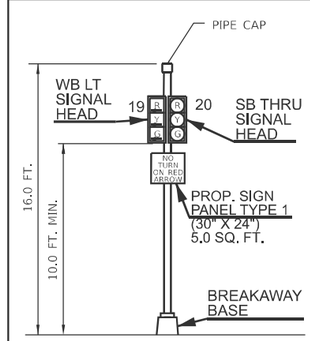

PROP. TS-5 (16 FT.)
INSTALL ON EX. FOUNDATION
MEDIAN WEST OF INTERSECTION

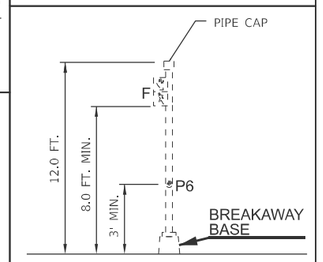

EX. TS-6 (12 FT.)
SOUTHEAST QUADRANT

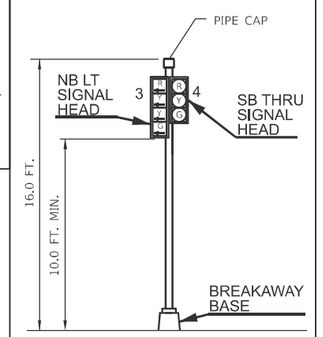

PROP. TS-7 (16 FT.)
INSTALL ON MOD. FOUNDATION
NORTHWEST CORNER ISLAND

NOTES:
1. THE VERTICAL CLEARANCE REQUIREMENTS BETWEEN THE BOTTOM OF THE LOWEST SIGNAL HEAD BACKPLATE AND THE HIGHEST POINT OF THE PAVEMENT ARE AS FOLLOWS: 16.0 FT. MINIMUM AND 18.0 FT. MAXIMUM.
2. ALL TRAFFIC SIGNAL SECTIONS SHALL HAVE 12" SINGLE RED LENSES.
3. THE RED SECTIONS OF THE SIGNAL HEADS SHARING THE SAME MAST ARM SHALL BE LEVEL WITH ONE ANOTHER.
4. THE CONTRACTOR SHALL RELOCATE ALL OTHER EXISTING SIGNS FROM THE REMOVED MAST ARMS AND TRAFFIC SIGNAL POSTS TO THE PROPOSED MAST ARMS AND TRAFFIC SIGNAL POSTS. THIS WORK WILL NOT BE PAID FOR SEPERATELY, BUT SHALL BE INCLUDED IN THE COST OF THE PROPOSED ITEMS.
5. THE CONTRACTOR SHALL FURNISH AND INSTALL TWO LUMINAIRE ARMS (ONE 15 FT. AND ONE 2 FT.) FOR THE PROPOSED MAST ARM MA-3. THE COST OF THE LUMINAIRE ARMS SHALL BE INCLUDED IN THE COST OF THE MAST ARM ASSEMBLY.
6. THE CONTRACTOR SHALL COORDINATE WORK WITH IDOT CONTRACT 68H77.

NOT TO SCALE

MODEL: D468F92_sheet1 - 17
FILE NAME: c:\pw_work\pwidot\illinois\dgn\0\93f664\93a\@\ill\60\ctsgpbwt\0\93f6553\D468F92-sht-TS.dgn

USER NAME = thevodusson	DESIGNED -	REVISED -	
	DRAWN -	REVISED -	
	CHECKED -	REVISED -	
PLOT DATE = 5/2/2025	DATE -	REVISED -	

STATE OF ILLINOIS
DEPARTMENT OF TRANSPORTATION

PROPOSED MAST ARM AND TRAFFIC SIGNAL DETAILS
US 24 (BOYD PKWY.) & CUMMINGS LN.

SCALE: | SHEET 17 OF 17 SHEETS | STA. | TO STA.

F.A.P RTE.	SECTION	COUNTY	TOTAL SHEETS	SHEET NO.
317	17(RS-6,TS-2);18(RS,TS)-2	TAZEWELL	85	76
		CONTRACT NO. 68F92		
		ILLINOIS	FED. AID PROJECT	

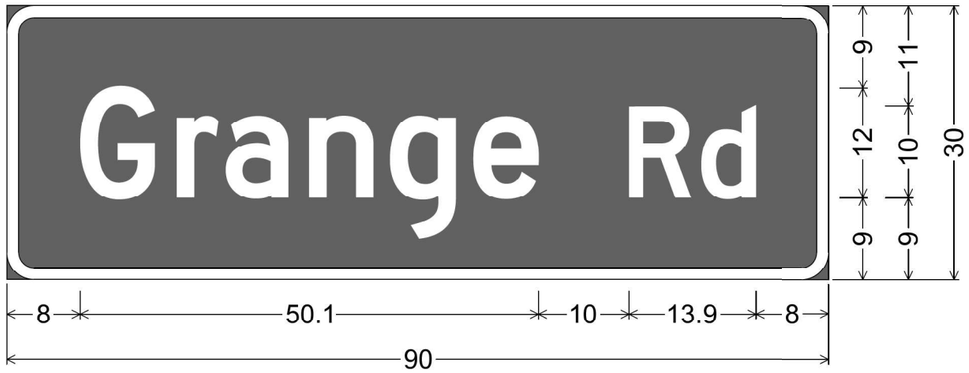

3.0" Radius, 1.3" Border, White on Green;
"Grange Rd", D 2K;
Table of distances between letter and object lefts

	G	r	a	n	g	e	R	d	
8.0	10.5	5.4	9.1	8.9	9.1	17.1	7.9	6.0	8.0

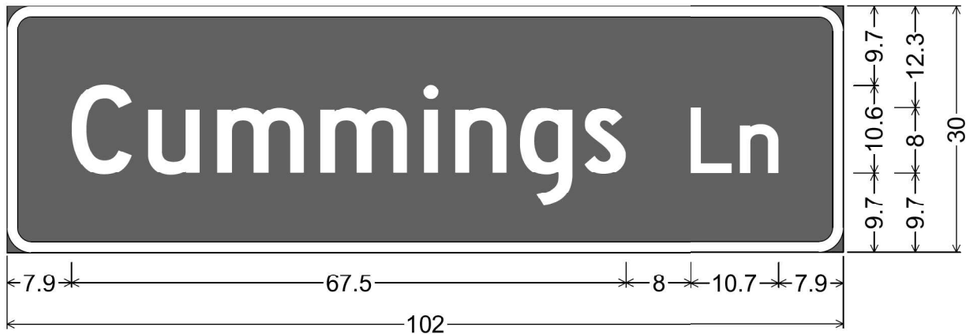

3.0" Radius, 1.3" Border, White on Green;
"Cummings Ln", D 2K;
Table of distances between letter and object lefts

	C	u	m	m	i	n	g	s	L	n	
7.9	9.3	8.4	12.6	12.6	3.8	7.9	7.9	13.0	6.0	4.7	7.9

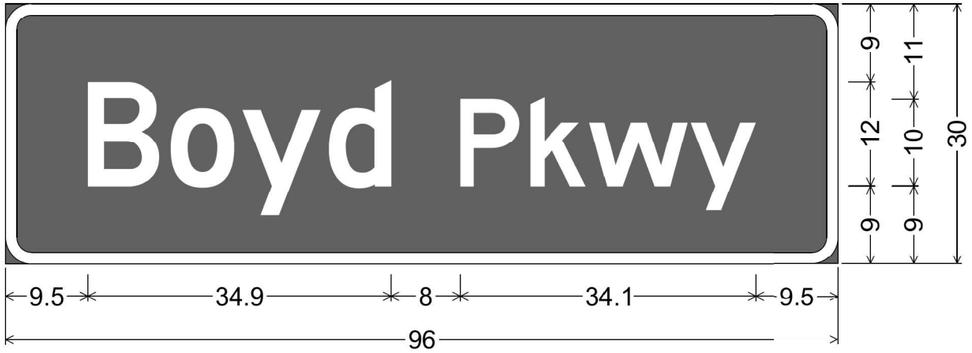

3.0" Radius, 1.3" Border, White on Green;
"Boyd Pkwy", D 2K;
Table of distances between letter and object lefts

	B	o	y	d	P	k	w	y	
9.5	9.5	8.2	10.0	15.2	8.1	6.8	11.7	7.5	9.5

NOT TO SCALE

MODEL: Default
FILE NAME: c:\pw_work\pwidot\hanson\d0939664\Signals Complete.dgn

USER NAME = trevor.hanson	DESIGNED -	REVISED -	
	DRAWN -	REVISED -	
	CHECKED -	REVISED -	
PLOT DATE = 1/7/2025	DATE -	REVISED -	

STATE OF ILLINOIS
DEPARTMENT OF TRANSPORTATION

PROPOSED SIGN PANEL DETAILS

SCALE: SHEET OF SHEETS STA. TO STA.

F.A. RTE.	SECTION	COUNTY	TOTAL SHEETS	SHEET NO.
317	17(RS-6,TS-2);18(RS,TS)-2	TAZEWELL	85	77
		CONTRACT NO.		
	ILLINOIS	FED. AID PROJECT		

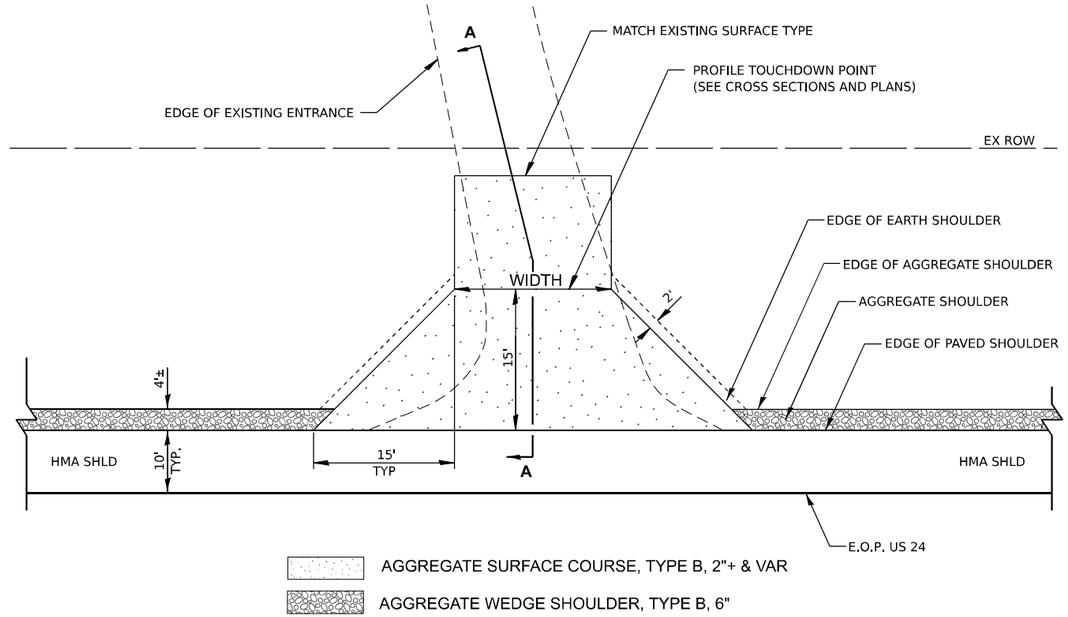

ENTRANCE PLAN DETAIL

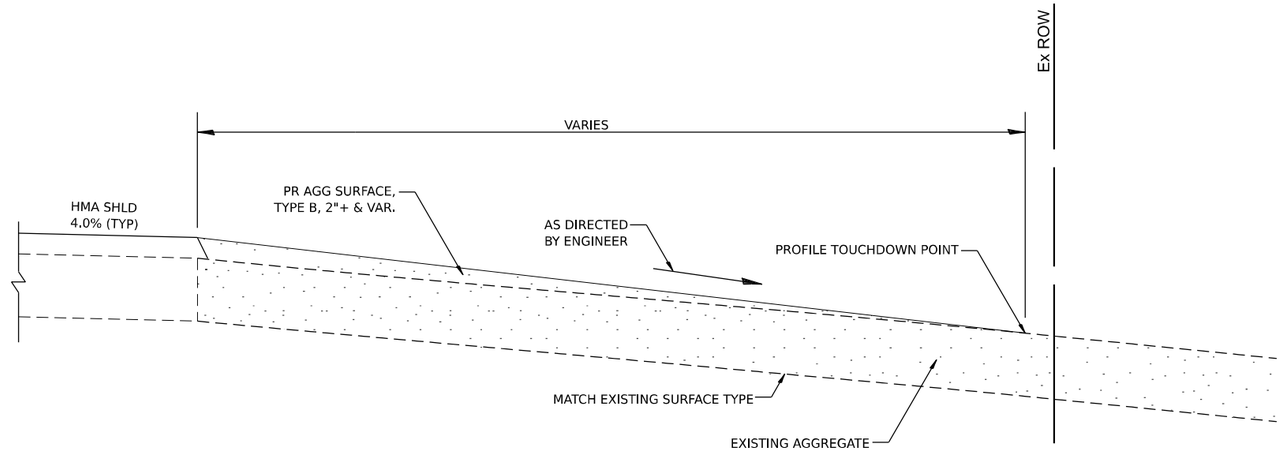

SECTION A–A

RURAL ENTRANCE
(EXISTING ENTRANCE LOWER THAN PROPOSED SURFACE)

All dimensions are in inches
unless otherwise noted.

MODEL: Sheet 7
FILE NAME: c:\shelby_ws\d0215423\D468F92-sh-Details.dgn

BFW ENGINEERING & CONSULTING

USER NAME = sskinner	DESIGNED -	REVISED -	
	DRAWN -	REVISED -	
PLOT SCALE = 0.1667 ' / in.	CHECKED -	REVISED -	
PLOT DATE = 10/07/2025	DATE -	REVISED -	

STATE OF ILLINOIS
DEPARTMENT OF TRANSPORTATION

RURAL ENTRANCES FOR "3P" PROJECTS
US 24

SCALE: N.T.S. | SHEET 1 OF 1 SHEETS | STA. | TO STA.

F.A.P. RTE.	SECTION	COUNTY	TOTAL SHEETS	SHEET NO.
317	17(RS6,TS-2);18(RS,TS)-2	TAZEWELL	85	78
DISTRICT 4 DETAIL NO. 635003		CONTRACT NO. 68F92		
	ILLINOIS	FED. AID PROJECT		

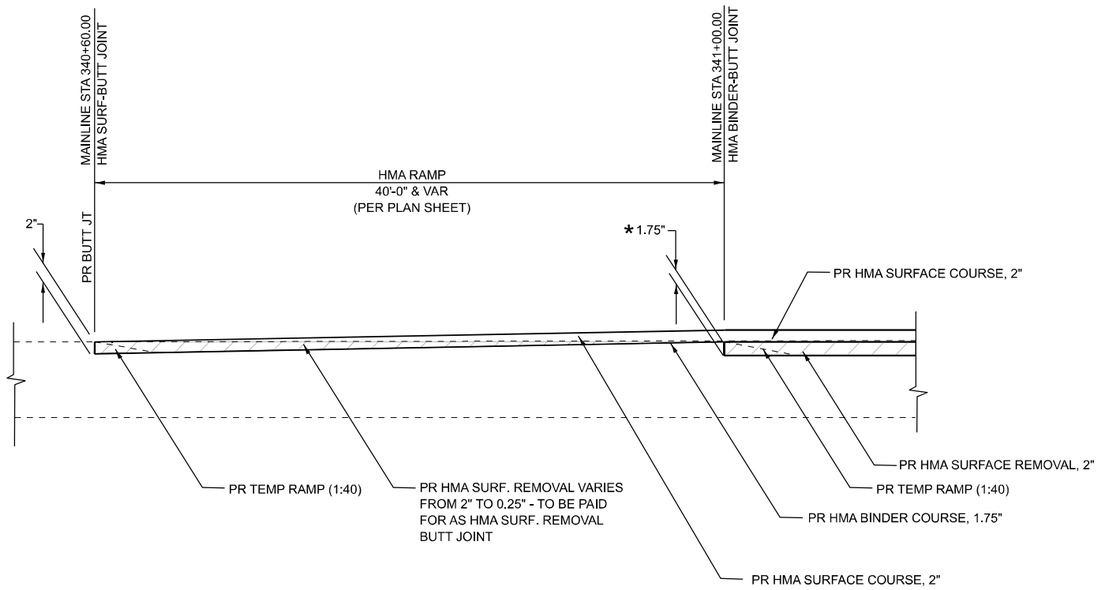

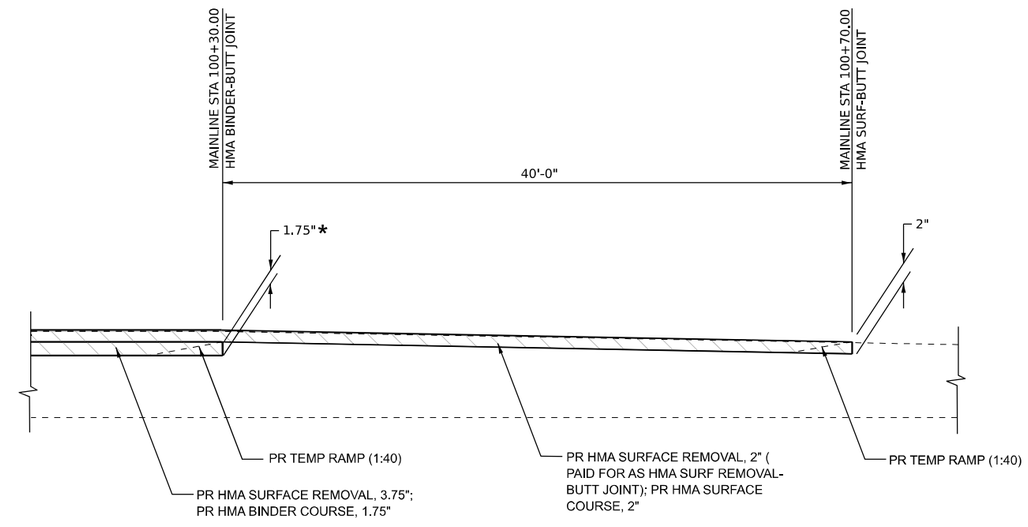

HMA RAMP DETAIL

* PR BUTT JOINT FOR HMA BINDER TO BE CONSIDERED AS PART OF NORMAL HMA SURFACE REMOVAL

HMA BUTT JOINT DETAIL

HMA RAMP LOCATIONS

US 24
STA 340+60.00 TO STA 341+00.00

GROSENBACH ROAD
STA 11+37.00 TO STA 11+77.00

HOLLAND GROVE ROAD
STA 10+82.00 TO STA 11+22.00

GRANGE ROAD
STA 8+00.00 TO STA 8+40.00
STA 11+30.00 TO STA 11+70.00

RAMP C (EXIT RAMP TO SB BL-24)
STA 6+90.00 TO STA 7+30.00

RAMP B (ENTRANCE RAMP FROM NB BL-24)
STA 23+20.00 TO STA 23+60.00

RAMP D
STA 0+50.00 TO STA 0+90.00

RAMP A
STA 16+50.00 TO STA 16+90.00

HMA BUTT JOINT LOCATIONS

US 24
STA 100+30.00 TO STA 100+70.00

SPRING CREEK ROAD
STA 12+37.00 TO STA 12+77.00
STA 7+47.00 TO STA 7+87.00

CUMMINGS LANE
STA 208+00.00 TO STA 208+40.00

MODEL: Sheet 2
FILE NAME: c:\shelby_ws\d0215423\D468F92-sht-Details.dgn

BFW ENGINEERING & CONSULTING

USER NAME = sskinner	DESIGNED -	REVISED -
	DRAWN -	REVISED -
PLOT SCALE = 0.1667 ' / in.	CHECKED -	REVISED -
PLOT DATE = 10/07/2025	DATE -	REVISED -

STATE OF ILLINOIS
DEPARTMENT OF TRANSPORTATION

HMA RAMP DETAIL
US 24

SCALE: N.T.S. | SHEET 1 OF 1 SHEETS | STA. | TO STA.

F.A.P. RTE.	SECTION	COUNTY	TOTAL SHEETS	SHEET NO.
317	17(RS-6,TS-2);18(RS,TS)-2	TAZEWELL	85	79
		CONTRACT NO. 68F92		
	ILLINOIS	FED. AID PROJECT		

GRANGE ROAD

EXISTING CORNER ISLANDS TO BE REMOVED (SQ FT) & REPLACED WITH PCC BASE COURSE, 12" (SQ YD) & NORMAL HMA RESURFACING

GROSENBACH RD & HOLLAND GROVE RD

EXISTING CORNER ISLANDS TO BE REM. & REPLACED (REPLACEMENT TO MATCH EXISTING PERIMETER)
PR ISLAND REMOVAL (SQ FT); PR CONC. MED. TY SM 6.24 (SQ FT)

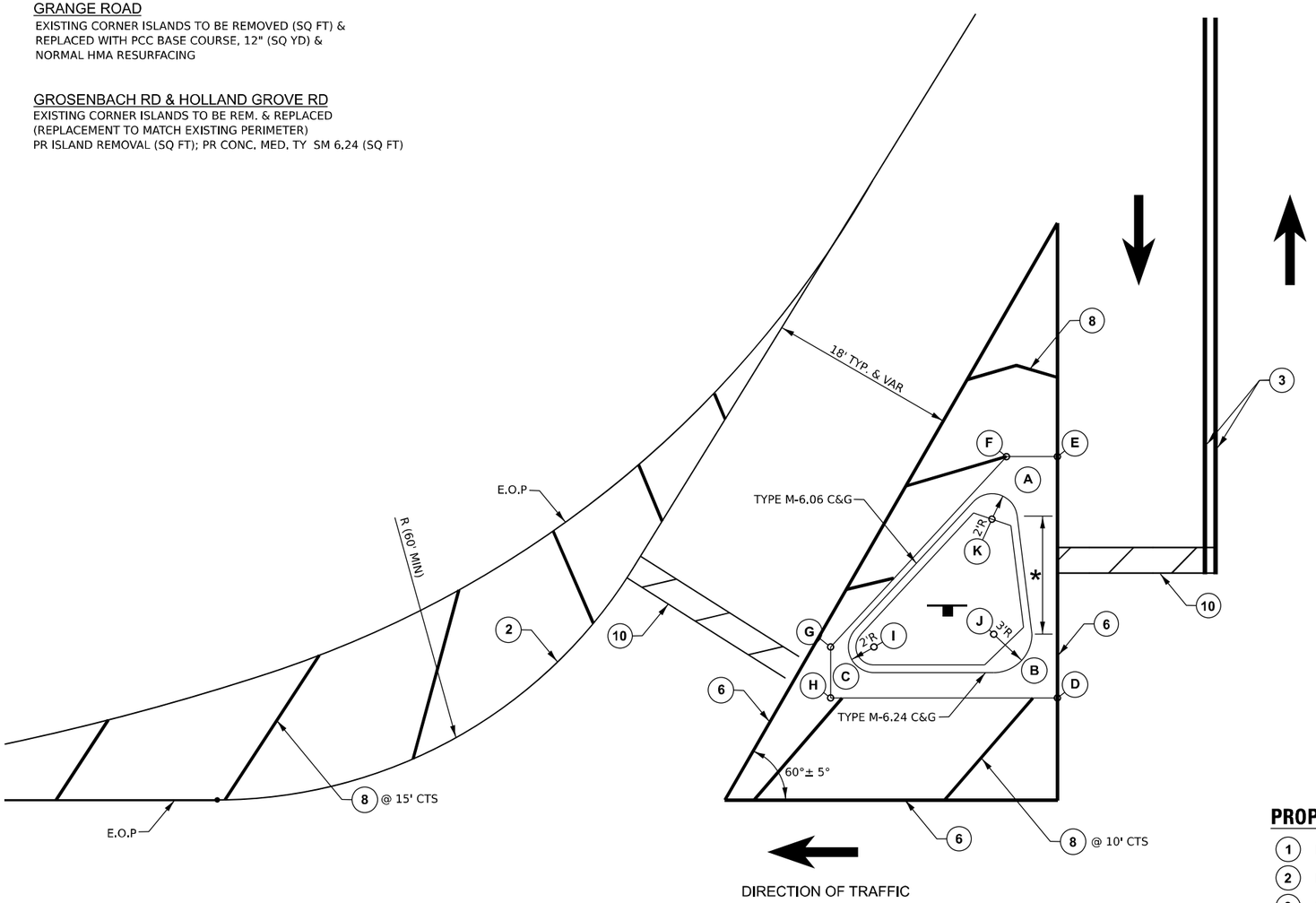

CORNER ISLAND DETAILS

NOTES:

(A) RAMP THE 1 & 2 NOSES OF THE CURBED ISLAND INLESS THE CURB FUNCTION IS TO PROTECT PEDESTRIANS, SIGNALS, LIGHT STANDARDS, OR SIGN TRUSS SUPPORTS.

(B) SEE IDOT HIGHWAY STDS FOR DETAILS OF RAMPING NOSES.

(C) ALL CORNER RADII ARE TO FACE OF CURB.

*TYPE M-6.24 TO 6.48 C&G (VARY GUTTER FLAG WIDTH FROM 24" TO 48")

CORNER LAYOUT INFORMATION		
POINTS	STATION	OFFSET
GROSENBACH ROAD		
D	10+52.00	12.00'
E	10+68.00	12.00'
F	10+68.00	16.00'
G	10+56.00	28.00'
H	10+52.00	28.00'
I	10+56.00	24.46'
J	10+57.00	17.05'
K	10+63.29	17.18'
HOLLANDS GROVE ROAD		
D	10+55.00	12.00'
E	10+71.00	12.00'
F	10+71.00	16.00'
G	10+59.00	28.00'
H	10+55.00	28.00'
I	10+59.00	24.46'
J	10+60.00	17.05'
K	10+66.29	17.18'

NOTE: NO SURVEYS WERE ACTUALLY COMPLETED ON THE EXISTING CORNER ISLAND LOCATIONS. THE INTENT OF THIS DESIGN IS TO MATCH THE EXISTING CORNER ISLAND AREA AS MUCH AS POSSIBLE, SO THE STATION AND OFFSETS SHOWN ABOVE WERE ROUGHED IN FROM AERIAL PHOTOS. THE CONTRACTOR AS PART OF CONSTRUCTION LAYOUT SHALL BE RESPONSIBLE FOR LAYING OUT AND ADJUSTING PROPOSED ISLAND LOCATIONS AS NECESSARY WITH APPOVAL OF THE ENGINEER PRIOR TO ACTUAL CONSTRUCTION. IF PAVEMENT REMOVAL IS REQUIRED FOR THE NEW ISLAND LAYOUT, THEN THE PAVEMENT REMOVAL WILL BE MEASURED AND PAID FOR PER SQUARE FOOT FOR ISLAND REMOVAL. NO ADDITIONAL COMPENSATION WILL BE ALLOWED FOR SAWING.

PROPOSED PAVEMENT MARKING LEGEND

1. MODIFIED URETHANE PAVEMENT MARKING - LINE 4" - WHITE, 30' SKIP - 10' DASH
2. MODIFIED URETHANE PAVEMENT MARKING - LINE 4" - SOLID WHITE
3. MODIFIED URETHANE PAVEMENT MARKING - LINE 4" - SOLID YELLOW
4. MODIFIED URETHANE PAVEMENT MARKING - LINE 6" - SOLID WHITE
5. MODIFIED URETHANE PAVEMENT MARKING - LINE 6" - WHITE, 6' SKIP - 2' DASH
6. MODIFIED URETHANE PAVEMENT MARKING - LINE 8" - SOLID WHITE
7. MODIFIED URETHANE PAVEMENT MARKING - LINE 8" - SOLID YELLOW
8. MODIFIED URETHANE PAVEMENT MARKING - LINE 12" - SOLID WHITE
9. MODIFIED URETHANE PAVEMENT MARKING - LINE 12" - SOLID YELLOW
10. MODIFIED URETHANE PAVEMENT MARKING - LINE 24" - SOLID WHITE; STOP BAR
11. MODIFIED URETHANE PAVEMENT MARKING - LETTERS AND SYMBOLS - SOLID WHITE; LARGE TURN ARROWS

NOTE: PROPOSED RAISED PAVEMENT MARKERS ARE NOT SHOWN ON PLAN SHEETS, BUT TO BE INSTALLED PER HIGHWAY STD 781001 = 1 @ 80' CTS ON EB & WB CENTERLINES; 1 @ 40' CTS ON SOLID TURN LANE LINES; 1 @ 20' CTS ON OUTSIDE RAMP EDGE LINES; 1 @ 40' CTS ON EDGE LINES OF RAMP GORE AREAS.

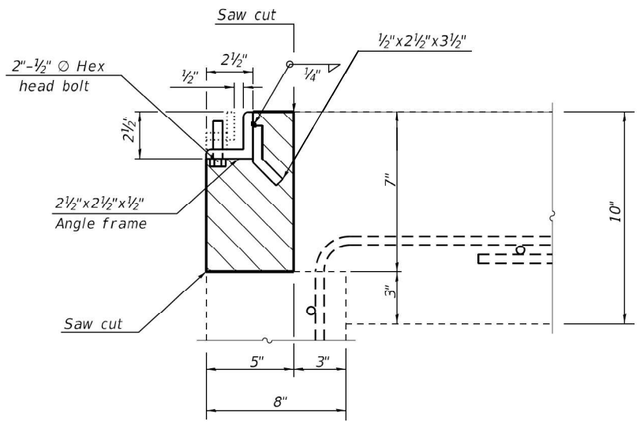

DETAIL "A" - EXISTING

Concrete Removal

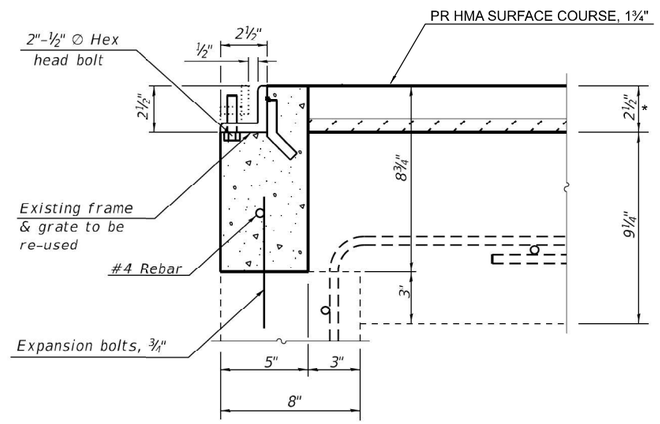

DETAIL "A" - PROPOSED

Class S.I. Concrete

* PRIOR TO GRINDING

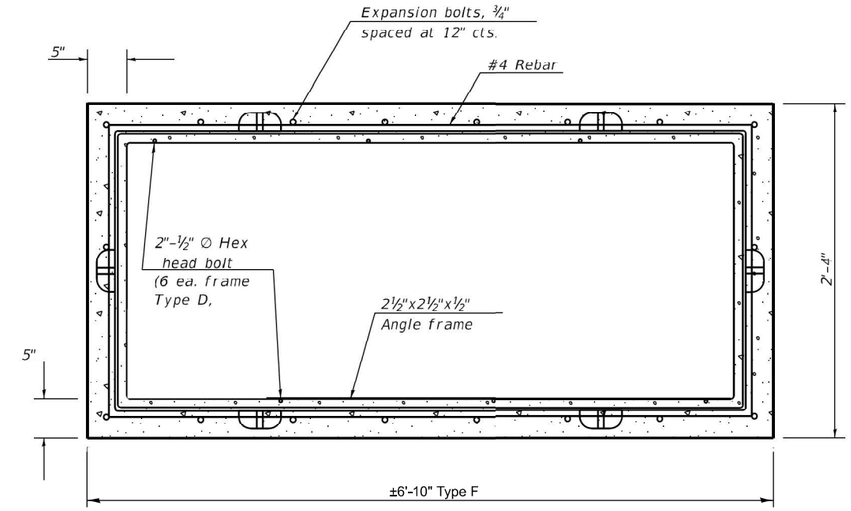

PLAN - PROPOSED
(GRATING OMITTED FOR CLARITY)

NOTES:
TYPE F FRAMES (3 GRATES) PER STD 610001 OCCUR AT 10' - WIDE SHOULDERS

EXPANSION BOLTS SHALL EXTEND A MINIMUM OF 4" INTO THE PROPOSED CONCRETE.

ALL WORK AND MATERIALS SHALL BE IN ACCORDANCE WITH APPLICABLE PORTIONS OF SECTION 602 & 610.

THIS WORK WILL BE PAID FOR AT THE CONTRACT UNIT PRICE EACH FOR "INLET BOXES TO BE ADJUSTED (SPECIAL)" WHICH SHALL INCLUDE ALL LABOR, EQIUPMENT AND MATERIAL NECESSARY TO COMPLETE THE WORK

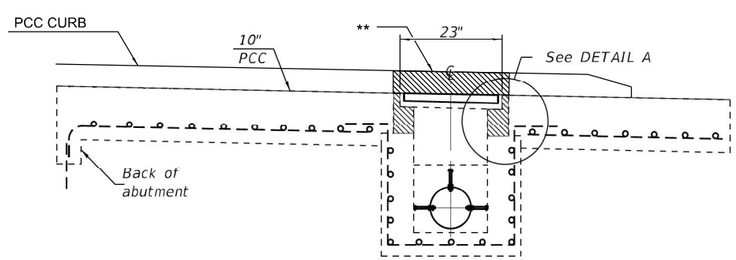

EXISTING PROFILE
BRIDGE APPROACH SHOULDER PAVEMENT AND DRAIN

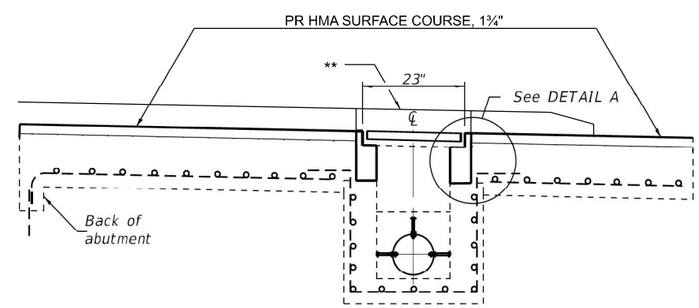

** REMOVE & REPLACE PCC CURB IF REQUIRED TO ADJUST GRATE.

PROPOSED PROFILE
BRIDGE APPROACH SHOULDER PAVEMENT AND DRAIN

ESTIMATED QUANTITIES

ITEM	UNIT	TYPE D TOTAL
CONCRETE REMOVAL	CU YD	0.12
REINFORCEMENT BARS (EPOXY)	POUND	11
CLASS S.I. CONCRETE	CU YD	0.18
EXPANSION BOLTS, ¾"	EACH	18

BILL OF MATERIAL

	ITEM	UNIT	TOTAL
*	INLET BOXES TO BE ADJUSTED (SPECIAL)	EACH	4.0

* QUANTITY INCLUDES 4 TYPE D

MODEL: Sheet 4
FILE NAME: c:\shelby_ws\d0215423\D468F92-sht-Details.dgn

BFW ENGINEERING & CONSULTING

USER NAME = sskinner	DESIGNED -	REVISED -
	DRAWN -	REVISED -
PLOT SCALE = 0.1667 ' / in.	CHECKED -	REVISED -
PLOT DATE = 10/07/2025	DATE -	REVISED -

STATE OF ILLINOIS
DEPARTMENT OF TRANSPORTATION

INLET BOX TO BE ADJUSTED
US 24

SCALE: N.T.S. | SHEET 1 OF 1 SHEETS | STA. | TO STA.

F.A.P. RTE.	SECTION	COUNTY	TOTAL SHEETS	SHEET NO.
317	17(RS-6,TS-2);18(RS,TS)-2	TAZEWELL	85	81

CONTRACT NO. 68F92

ILLINOIS | FED. AID PROJECT

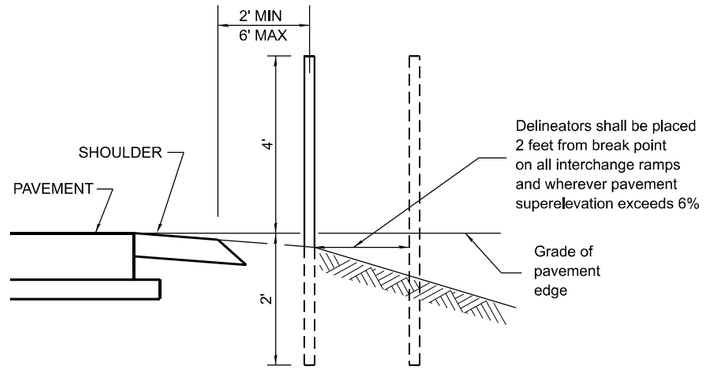

SECTIONAL VIEW

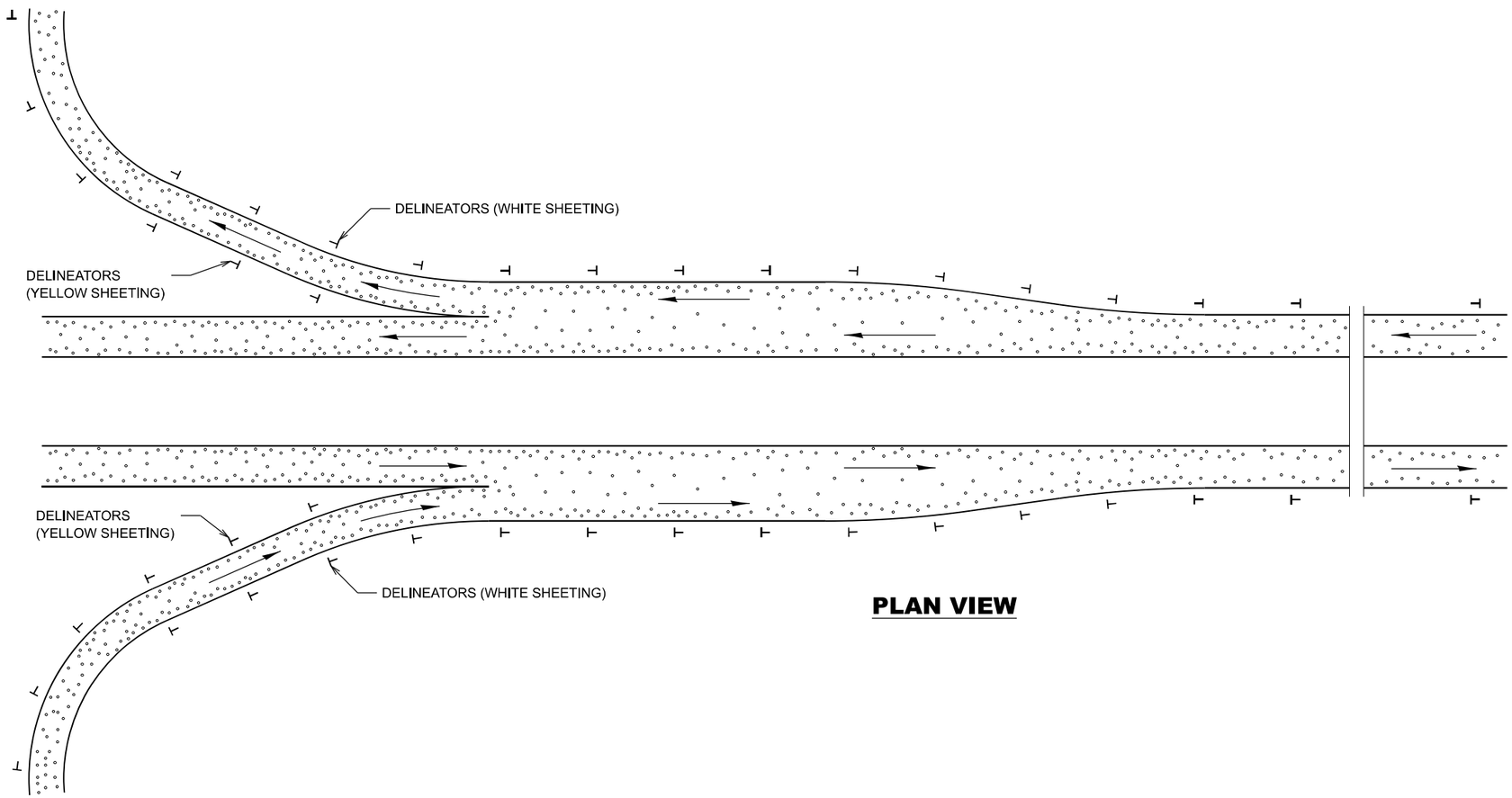

PLAN VIEW

SPACING FOR RECOVERABLE DELINEATORS ON HORIZONTAL CURVES ON RAMPS

Radius of Curve Feet	Spacing on Curve Feet	Spacing in Advance and Beyond Curve Feet		
		1st. Space	2nd. Space	3rd. Space
Less than 100	20	40	65	125
100 - 174	30	60	90	180
175 - 224	35	70	110	200
225 - 274	40	85	125	200
275 - 349	50	95	145	200
350 - 449	55	110	170	200
450 - 549	65	125	190	200
550 - 649	70	140	200	200
650 - 749	75	150	200	200
750 - 849	80	165	200	200
850 - 949	85	175	200	200
950 - 1049	90	185	200	200
1050 - 1299	100	200	200	200
1300 - 1999	125	200	200	300
2000 - 2999	150	200	200	300
3000 - 3999	175	200	300	300
4000 or greater	400	400	400	400

GENERAL NOTES

Delineators on mainline shall be placed at 400' spacing on tangent sections, and 200' spacing on curved sections. (Radius < 4000')

Delineators on ramps, shall be placed as follows:
1. On tangent sections, acceleration lanes and deceleration lanes at maximum spacing of 100'.
2. On outside of all curved sections.
(See table above for spacing)

MODEL: Sheet 5
FILE NAME: c:\shelby_ws\d0215423\D-68F92-sht-Details.dgn

BFW ENGINEERING & CONSULTING

USER NAME = sskinner	DESIGNED -	REVISED -	
	DRAWN -	REVISED -	
PLOT SCALE = 0.1667 ' / in.	CHECKED -	REVISED -	
PLOT DATE = 10/07/2025	DATE -	REVISED -	

STATE OF ILLINOIS
DEPARTMENT OF TRANSPORTATION

RECOVERABLE DELINEATORS DETAIL
US 24

SCALE: N.T.S. | SHEET 1 OF 1 SHEETS | STA. | TO STA.

F.A.P. RTE.	SECTION	COUNTY	TOTAL SHEETS	SHEET NO.
317	17(RS-6,TS-2);18(RS,TS)-2	TAZEWELL	85	82
DISTRICT 4 DETAIL NO. 635002		CONTRACT NO. 68F92		
		ILLINOIS FED. AID PROJECT		

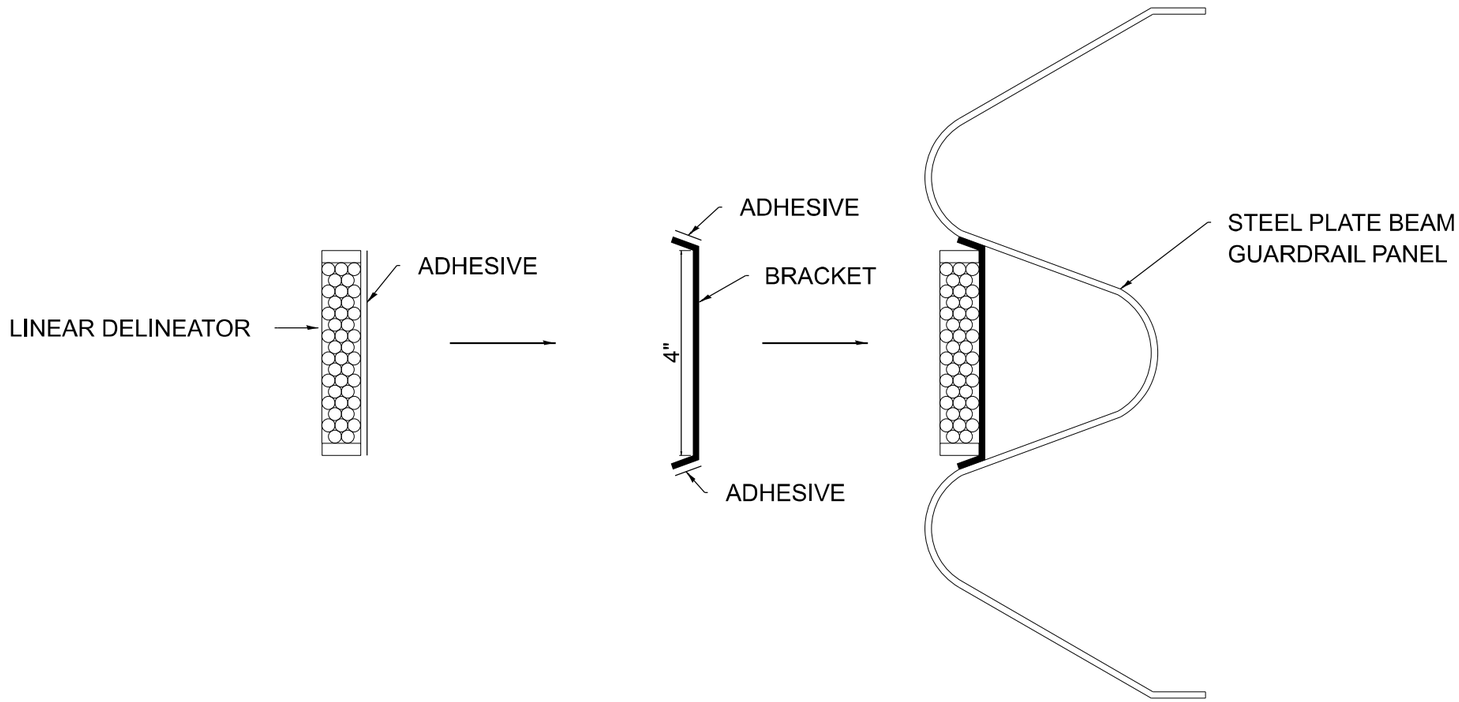

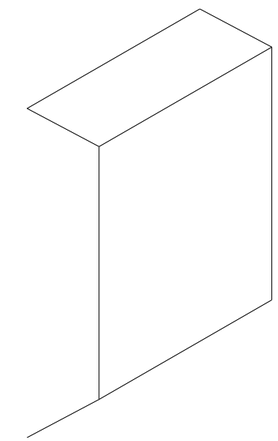

4" BRACKET

LINEAR DELINEATOR APPLICATION TO STANDARD GALVANIZED GUARDRAIL

LINEAR DELINEATOR SHALL BE APPLIED ACCORDING TO THE MANUFACTURER'S RECOMMENDATIONS

MODEL: Sheet 6
FILE NAME: c:\shelby_wsd\02154231D468F92-sht-Details.dgn

BFW ENGINEERING & CONSULTING	USER NAME = sskinner	DESIGNED -	REVISED -
		DRAWN -	REVISED -
	PLOT SCALE = 0.1667 ' / in.	CHECKED -	REVISED -
	PLOT DATE = 10/07/2025	DATE -	REVISED -

STATE OF ILLINOIS
DEPARTMENT OF TRANSPORTATION

LINEAR DELINEATOR APPLICATION DETAIL
US 24

SCALE: N.T.S. | SHEET 1 OF 1 SHEETS | STA. | TO STA.

F.A.P. RTE.	SECTION	COUNTY	TOTAL SHEETS	SHEET NO.
317	17(RS-6,TS-2);18(RS,TS)-2	TAZEWELL	85	83
	DISTRICT 4 DETAIL NO. 635003	CONTRACT NO. 68F92		
	ILLINOIS	FED. AID PROJECT		

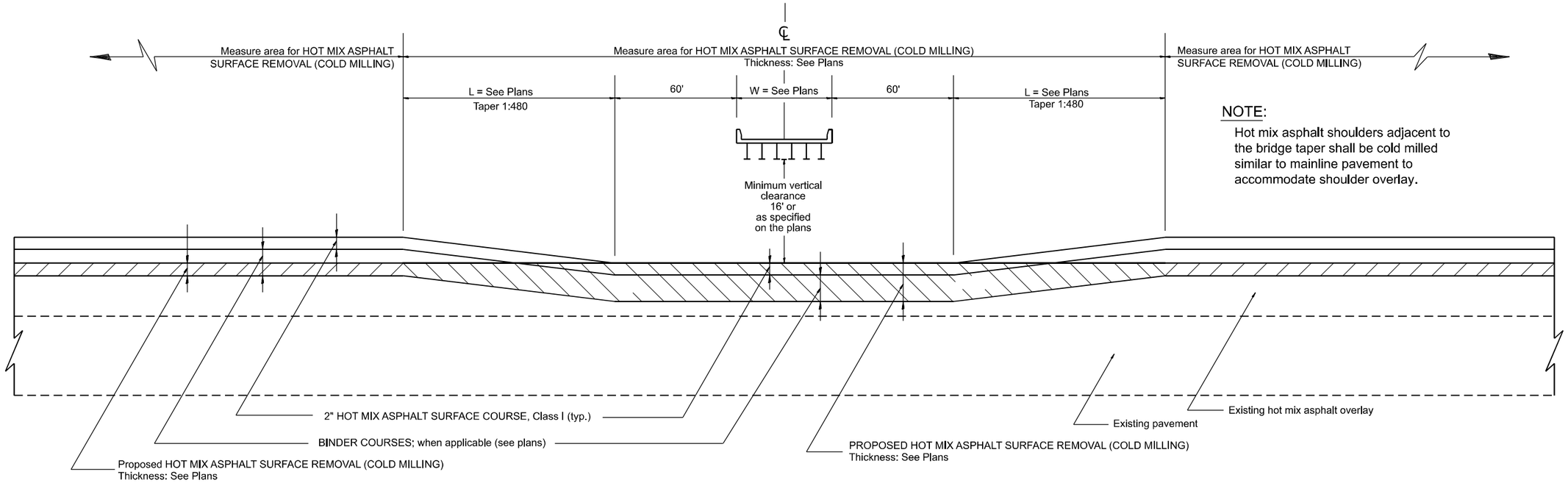

NOTE:

Hot mix asphalt shoulders adjacent to the bridge taper shall be cold milled similar to mainline pavement to accommodate shoulder overlay.

CASE 1: WITH HOT MIX ASPHALT SURFACE REMOVAL (COLD MILLING)

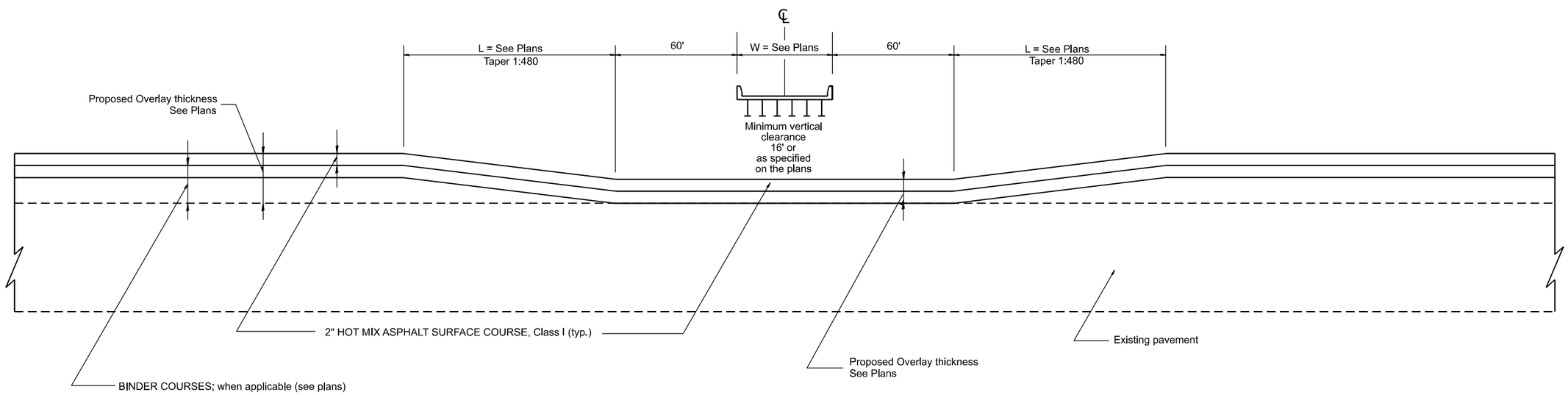

CASE 2: NO HOT MIX ASPHALT SURFACE REMOVAL (COLD MILLING)

All dimensions are in inches unless otherwise noted.

MODEL: Sheet 8
FILE NAME: c:\shelby_ws\d0215423\D468F92-sht-Details.dgn

BFW ENGINEERING & CONSULTING

USER NAME = sskinner	DESIGNED -	REVISED -	
	DRAWN -	REVISED -	
PLOT SCALE = 0.1667 ' / in.	CHECKED -	REVISED -	
PLOT DATE = 10/07/2025	DATE -	REVISED -	

STATE OF ILLINOIS
DEPARTMENT OF TRANSPORTATION

PAVEMENT OVERLAY UNDER STRUCTURES SPECIAL TREATMENT
US 24

SCALE: N.T.S. | SHEET 1 OF 1 SHEETS | STA. | TO STA.

F.A.P. RTE.	SECTION	COUNTY	TOTAL SHEETS	SHEET NO.
317	17(RS-6,TS-2);18(RS,TS)-2	TAZEWELL	85	84
DISTRICT 4 DETAIL NO. 635003		CONTRACT NO. 68F92		
	ILLINOIS	FED. AID PROJECT		

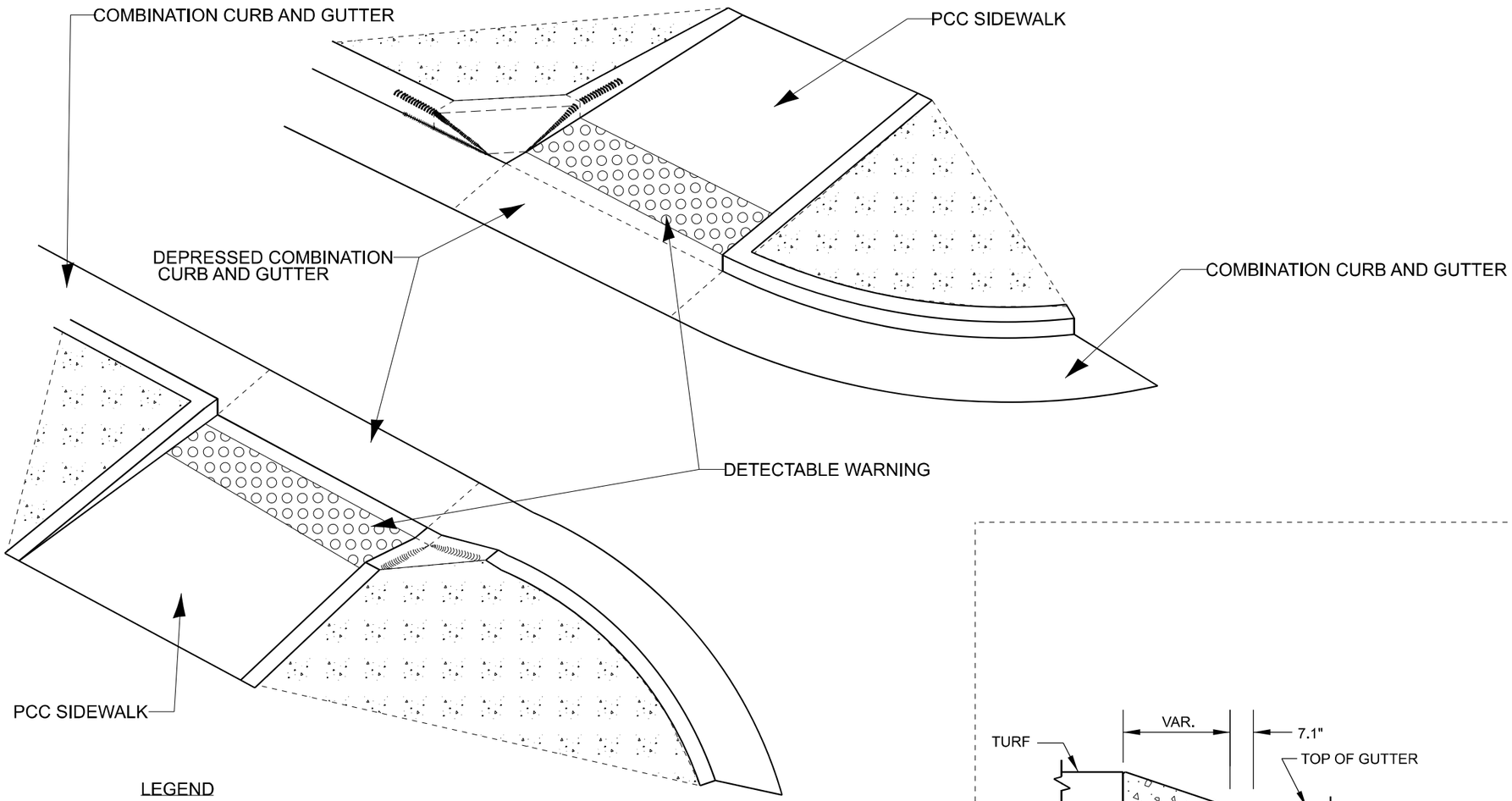

LEGEND

CONCRETE OR TURF

SIDE CURB

Notes:

if contractor or local agency requests
a variation of the approach nose, approval
must be made by both resident engineer
and district ada coordinator.

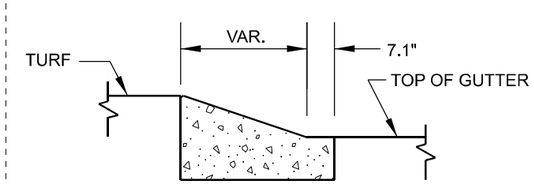

SECTION A-A

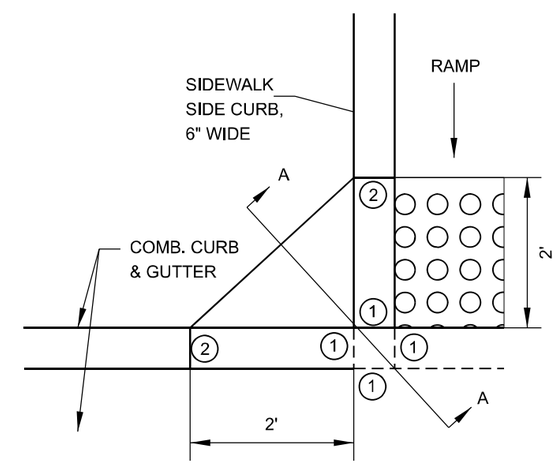

(1) 0" CURB HEIGHT

(2) FULL CURB HEIGHT

APPROACH NOSE DETAIL

MODEL: Sheet 9
FILE NAME: c:\shelby_ws\d0215423\D468F92-sht-Details.dgn

BFW ENGINEERING & CONSULTING	USER NAME = sskinner	DESIGNED -	REVISED -	STATE OF ILLINOIS DEPARTMENT OF TRANSPORTATION	SIDEWALK SIDE CURB APPROACH NOSE DETAIL	F.A.P. RTE.	SECTION	COUNTY	TOTAL SHEETS / SHEET NO.
		DRAWN -	REVISED -			317	17(RS-6,TS-2);18(RS,TS)-2	TAZEWELL	85 / 85
	PLOT SCALE = 0.1667 ' / in.	CHECKED -	REVISED -			DISTRICT 4 DETAIL NO. 424201		CONTRACT NO. 68F92	
	PLOT DATE = 10/07/2025	DATE -	REVISED -		SCALE: N.T.S. SHEET 1 OF 1 SHEETS STA. TO STA.		ILLINOIS	FED. AID PROJECT	