#88216 #1X 6-1-97 FAP 315 Fulton/Mason Co. Sec. 140B-I-4 I&R Copy #1X

1X

95%
8-22-98

F.A.P. RTE.	SECTION	COUNTY	TOTAL SHEETS	SHEET NO.
315	140B-I-4	MASON/FULTON		1
FED. ROAD DIST. NO.		ILLINOIS	FED. AID PROJECT	

D-94-143-89

STATE OF ILLINOIS
DEPARTMENT OF TRANSPORTATION
DIVISION OF HIGHWAYS

PLANS FOR PROPOSED FEDERAL AID HIGHWAY

F.A.P. ROUTE 315 (US 136)
SECTION 140B-I-4
PROJECT NO. ACBHF-315(18)
FULTON/MASON COUNTIES
BRIDGE REPAIR – IL RIVER BRIDGE
C-94-154-89

INDEX OF SHEETS

LIST OF STANDARDS

STANDARD NO.

000001 542401 701001 702001
280001 630001 701006 720006
420101 631011 701301 667101
515001 631026 701311

SURVEY BOOK NOS.
2737

METRIC RATIOS

1 m 0 2 m — 1 : 50
0 5 m 10 m — 1 : 100
10 m 0 20 m — 1 : 250
5 m 0 20 m — 1 : 500

FULL SIZE PLANS HAVE BEEN PREPARED USING STANDARD ENGINEERING SCALES, REDUCED SIZED PLANS WILL NOT CONFORM TO STANDARD SCALES, IN MAKING MEASUREMENTS ON REDUCED PLANS, THE ABOVE SCALES MAY BE USED.

J.U.L.I.E.
JOINT UTILITY LOCATION INFORMATION FOR EXCAVATION
1-800-892-0123

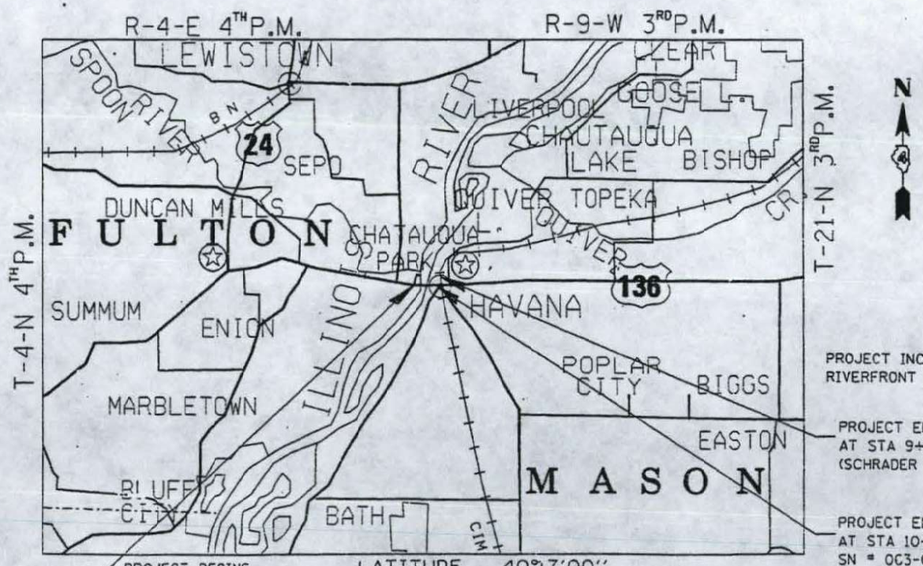

LOCATION OF SECTION INDICATED THUS:-

4-209

STATE OF ILLINOIS
DEPARTMENT OF TRANSPORTATION
DIVISION OF HIGHWAYS

SUBMITTED 6-3 19 97
D. E. Thompson
DISTRICT ENGINEER
19
ENGINEER OF PROJECT DEVELOPMENT AND IMPLEMENTATION
June 27, 1997
Bill Merkle
ENGINEER OF DESIGN AND ENVIRONMENT
June 27, 1997
James C. Sky
DIRECTOR, DIVISION OF HIGHWAYS

ADT = 5,600 (1995)
MU% = 13.4

FOR UTILITY INFORMATION CALL J.U.L.I.E. PHONE 800 892 0123

QC/QA CONCRETE

PRINTED BY THE AUTHORITY OF THE STATE OF ILLINOIS

STA EQUATION 38+077.000 (BK) = 10+268.000 (AHD)

GROSS LENGTH OF IMPROVEMENT = 630.57m = 0.63km
NET LENGTH OF IMPROVEMENT = 630.57m = 0.63km

CONTRACT NO. 88216
CATALOG NO. 030003-01D

063-0002

DESIGN BY: GEORGE MERKLE PHONE # (309)671-3451
PROJECT ENGINEER: GARY McCONKEY PHONE: (309)671-3455

/usr/project/havabr1/plm%.01?.dgn

063-0002

Bench Mark: B.M. #62 - S. & W. vertical in 457 mm Elm - 30.48 m Lt. of Sta. 10+855.47 Elev. 142.366 U.S.G.S. (1929) Datum.
B.M. #61 - S. & N. Horiz. in power pole #4 - 30.48 m Lt. of Sta. 10+500.38 Elev. 134.844 - U.S.G.S. (1929) Datum.

Existing Structure: S.N. 063-0002. The 3 span continuous truss with a single span truss and a 4 span continuous wide flange beam approach was built in 1935 as S.B.I. Route 78, Section 140B. It was rehabilitated in 1962 and 1970. The existing bridge width is ±8.4 m face to face of a curb and a sidewalk and length is ±526.3 m back to back of abutments.
The truss floor system and approach superstructures shall be removed and replaced along with other substructure repairs. The structure shall be closed during construction using ferry service for traffic.

No salvage.

Note: All dimensions are in millimeters (mm) except as noted.

STATE OF ILLINOIS
DEPARTMENT OF TRANSPORTATION

F.A.P. 315	140B-1-4	FULTON & MASON		19	SHEET NO. 1 / 123 SHEETS

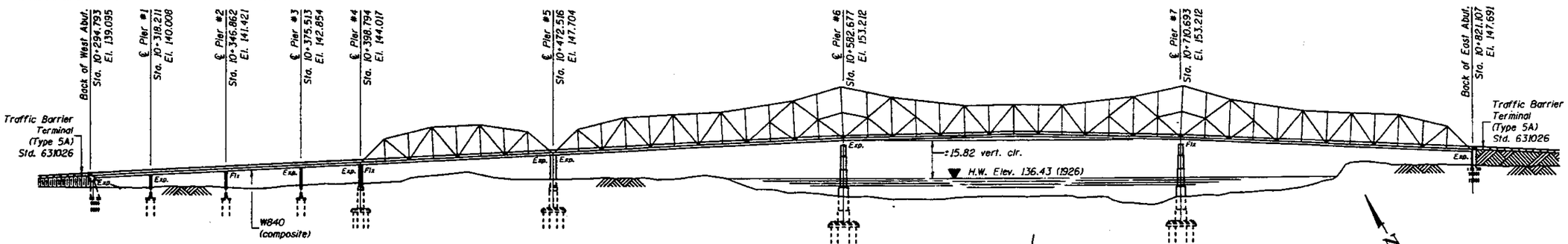

Note: The elevations are along the P.G. line.

ELEVATION

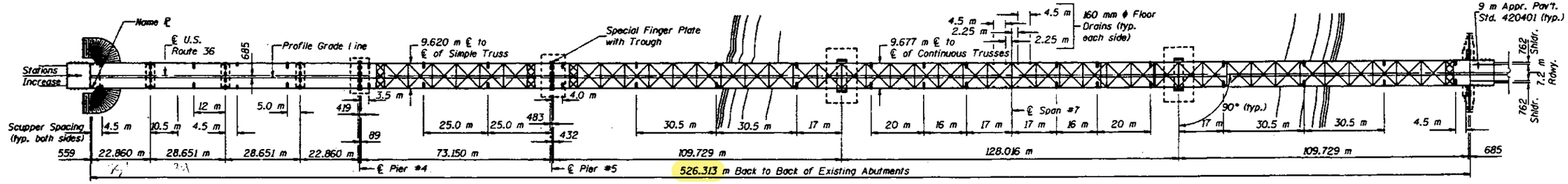

PLAN

Note: New P.G. elevations are resulting from raising existing P.G. elevations (from survey) by 50 mm (±2").

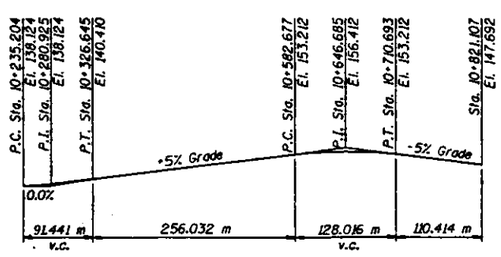

PROFILE GRADE
(685 mm South of New ℄ Rdwy.)

LOADING MS18 (New Construction)
No future wearing surface allowed.

DESIGN SPECIFICATIONS
1992 A.A.S.H.T.O., 1993, 1994 and 1995 Interims and 1995 Seismic Retrofitting Manual for Highway Bridges (FHWA-RD-94-052)

DESIGN STRESSES

FIELD UNITS (New Construction)
f'_c = 24 MPa
f_y = 400 MPa (reinforcement)
f_y = 250 MPa (structural steel M270, Gr. 250)
f_y = 345 MPa (structural steel M270, Gr. 345)
f_y = 485 MPa (structural steel M270, Gr. 485)

EXISTING STRUCTURE
f'_c = 8 MPa
f_s = 125 MPa (structural steel truss)
f_s = 140 MPa (reinforcement)

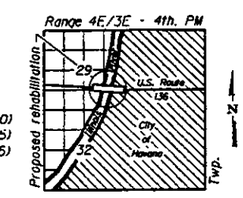

LOCATION SKETCH

U.S. 136 OVER THE ILLINOIS RIVER AT HAVANA
F.A.P. ROUTE 315 - SEC. 140B-I-4
FULTON AND MASON COUNTIES
STA. 10+646.69
STRUCTURE NO. 063-0002

DESIGNED	
CHECKED	THM
DRAWN	R. Doty
CHECKED	THM, JLC

June 26, 1997
EXAMINED
PASSED
EXPIRES 11-30-98

STATE OF ILLINOIS
DEPARTMENT OF TRANSPORTATION

ROUTE NO.	SECTION	COUNTY	TOTAL SHEETS	SHEET NO.
F.A.P. 315	140B-1-4	FULTON & MASON		21
FED. ROAD DIST. NO. 7	ILLINOIS	FED. AID PROJECT-		

SHEET NO. 2
123 SHEETS

GENERAL NOTES

The Inorganic zinc rich primer / Acrylic / Acrylic Paint System shall be used for shop and field painting of new structural steel except where otherwise noted. The color of the acrylic finish coat shall be Blue, Munsell No. 10B 3/6. See Special Provision "Cleaning and Painting New Metal Structures".

Cleaning and painting of the existing structural steel shall be as specified in the Special Provision "Cleaning and Painting Existing Steel Structures." All existing structural steel between the bottom of the bottom chord to a point 3m above the deck shall be cleaned by Method 1. The remaining portions of existing structural steel do not require any cleaning or painting. The Aluminum Epoxy Mastic / Acrylic Paint System shall be used for painting of existing structural steel. The prime and intermediate coats shall be applied as specified in the special provision, followed by a full final finish coat over all designated steel surfaces. The color of the final finish coat shall be Blue, Munsell No. 10B 3/6.

All exposed contact surface areas of existing structural steel shall be free of paint or lacquer prior to attaching new structural steel except where otherwise noted.

Fasteners shall be high strength bolts. Bolts M22, open holes 24 mm ϕ. unless otherwise noted.

Calculated mass of AASHTO M 270M, Grade 345 Structural Steel = 352400 kg.
Calculated mass of AASHTO M 270M, Grade 250 Structural Steel = 138140 kg.
Calculated mass of AASHTO M 270M, Grade 485 Structural Steel = 85750 kg.
} 526,290 kg
1,270,505

Roadway expansion guards shall be assembled in the proper position with the ends in place and shall be left assembled for shop inspection.

The approach span beams and corresponding splice plates, floor beam connection angles, stringers and stringer connection angles shall be AASHTO M 270M, Grade 345 Structural Steel. The floor beams shall be AASHTO M 270M, Grade 485 Structural Steel.

Field welding of construction accessories will not be permitted to the bottom flange of beams nor to the top flange for a distance equal to one-fourth the span length each way from the pier supports for the approach spans. Field welding of construction accessories will not be permitted to the bottom flange of stringers nor floor beams for the truss spans. Field welding in other areas will be permitted only when approved by the Engineer.

Anchor bolts shall be set before bolting diaphragms over supports.

The main load carrying member components subject to tensile stress shall conform to the Supplemental Requirements for Notch Toughness Zone 2. These Components are the truss floor beams, floor beam connection angles, stringers, stringer connection angles, all approach span beams and corresponding splice plates.

Reinforcement bars shall conform to the requirements of AASHTO M-31M, M-42M or M-53M Grade 400.

Plan dimensions and details relative to existing structure have been taken from existing plans and are subject to nominal construction variations. The Contractor shall verify dimensions and details in the field according to the Special Provisions for "Field Measurements".

Bridge Seat Sealer shall be applied to the seat area of the abutments and Piers 4 & 5.

Burning of rivet heads in removing existing rivets is not permitted, except as specified in the Special Provision.

All dimensions given along the horizontal except for stringer dimensions.

The Contractor shall take care not to damage truss members during removal of existing handrail.

The Contractor shall take care not to damage gusset plates and lateral bracing during removal of existing floor beams and stringers.

Bearing seat surfaces shall be constructed or adjusted to the designated elevations within a tolerance of 3 mm. Adjustment shall be made either by grinding the surface or by shimming the bearing. Two 3 mm adjusting shims, of the dimensions of the bottom bearing plate, shall be provided for each bearing in addition to all other plates or shims. For Type I Elastomeric Bearings, shims of the dimensions of the top plate shall be placed as detailed.

TOTAL BILL OF MATERIAL

	ITEM	UNIT	SUPER	SUB	TOTAL
*	Removal of Existing Superstructures	Each	1		1
	Concrete Removal	m^3		136.3	136.3
**	Removal of Existing Concrete Deck	L.S.	1		1
	Structure Excavation	m^3		78.9	78.9
	Floor Drains	Each	8		8
	Neoprene Expansion Joint 65 mm (Special)	m	17.9		17.9
	Concrete Superstructure	m^3	629.1		629.1
	Elastomeric Brg. Assembly, Type I	Each	12		12
	Elastomeric Brg. Assembly, Type II	Each	12		12
	Elastomeric Brg. Assembly, Type II (Modified)	Each	84		84
	Concrete Structures	m^3		165.6	165.6
	Furnishing & Erecting Structural Steel	L.S.	1		1
	Stud Shear Connectors	Each	22704		22704
**	Structural Steel Removal	kg	441900		441900
	Steel Bridge Rail, Type SM (Modified)	m	1052.6		1052.6
**	Handrail Removal	m	844.6		844.6
	Cleaning & Painting Steel Bridge	L.S.	1		1
	Reinforcement Bars, Epoxy Coated	kg	80070	14110	94180
	Name Plates	Each	1		1
	Bridge Seat Sealer	m^2		35.5	35.5
	Epoxy Crack Sealing	m		39.6	39.6
	Jacking and Cribbing	Each		12	12
	Drainage Scuppers, Modified	Each	8		8
	Drainage Scuppers, Special	Each	34		34
	Rivet Removal and Replacement	Each	537		537
	Reinforced Neoprene Expansion Joint Treatment	m	17.9		17.9
	Temporary Support System	Each		5	5
	Bridge Deck Grooving	m^2	4356.4		4356.4
	Composite Grid Deck System	m^2	3688.1		3688.1
	Floating Bearing, Fixed 1750kN	Each	2		2
	Floating Bearing, Guided Exp. 1750kN	Each	2		2
	Floating Bearing, Guided Exp. 2000kN	Each	4		4
	Floating Bearing, Guided Exp. 6000kN	Each	2		2
	Floating Bearing, Fixed 6000kN	Each	2		2
	Formed Concrete Repair (Depth Less Than or Equal to 125)	m^2		21.0	21.0
	Formed Concrete Repair (Depth Greater Than 125)	m^2		6.7	6.7
	Blasting Residue Containment & Disposal	L.S.	1		1
	Protective Coat	m^2	4670.4		4670.4
	Field Measurements	L.S.	1		1
	Preformed Joint Seal 45 mm	m	142.8		142.8

* All Approach Spans
** All Truss Spans

STATION 10+646.69
REBUILT 19 BY
STATE OF ILLINOIS
F.A.P. RT. 315 SEC. 140B-1-4
PROJECT:
LOADING MS18
STR. NO. 063-0002

NAME PLATE

See Std. 515001
For location, see sheet #1 of 123.
Existing Name Plate shall be cleaned and relocated next to New Name Plate. Cost included with "Name Plates."

DESIGNED	L.S.H.
CHECKED	T.P.B.
DRAWN	R. Daty
CHECKED	T.P.B. DJS

June 26, 1997
ENGINEER OF FIELD DESIGN
ENGINEER OF BRIDGES AND STRUCTURES

GENERAL DATA
F.A.P. RT. 315 SECTION 140B-1-4
FULTON AND MASON COUNTIES
STATION 10+646.69

STATE OF ILLINOIS
DEPARTMENT OF TRANSPORTATION

ROUTE NO.	SECTION	COUNTY	TOTAL SHEETS	SHEET NO.
F.A.P. 315	140B-1-4	FULTON & MASON		
FED. ROAD DIST. NO. 7		ILLINOIS	FED. AID PROJECT-	

SHEET NO. 2A
123 SHEETS

SEQUENCE OF CONSTRUCTION

I. Approach Units (Spans 1-4)
1. Remove Existing Concrete Deck
2. Remove Steel Girders
3. Concrete Removal, Repair and Placement Of New Concrete. Approach Step Placement Coordinated With Truss Work At Pier 4.
4. Erect New bearings and Structural Steel
5. Pour Concrete Superstructure

II. Truss Units (Spans 5-8)
1. Preliminary Truss Work
   - A. Remove Existing Concrete Deck
   - B. Perform Rivet Removal and Replacement
2. Floor Beam and Stringer Replacement To Be Performed According To The Special Provisions
3. Bottom Lateral Bracing Replacement May Be Performed During Stringer Replacement
4. Piers 4 and 7
   - A. Install Temporary Support System and Jacking and Cribbing
   - B. Replace Three Floor Beams (FB-1,2,3) and Two Bays Of Stringers At Pier 4 In Span 5
   - C. Jack Trusses 3 mm (1/8 Inch)
   - D. Remove Bearings
   - E. Perform Pier Repairs and New Construction. Approach Steps At Pier 4 To Be Placed After Temporary Support System Is Removed
   - F. Install Bearings
   - G. Lower Trusses Onto New Bearings
   - H. Remove Temporary Support System and Jacking and Cribbing
   - I. Pour Approach Steps At Pier 4
5. Pier 5 and East Abutment
   - A. Remove The Backwall Of The East Abutment
   - B. Install Temporary Support System and Jacking and Cribbing
   - C. Replace Three Floor Beams (FB-46,47,48) and Two Bays Of Stringers At East Abutment In Span 8
   - D. Jack Trusses 3 mm (1/8 Inch)
   - E. Remove Bearings
   - F. Perform Pier and Abutment Repairs and New Construction. Back Wall At East Abutment To Be Placed After Temporary Support System Is Removed
   - G. Install Bearings
   - H. Lower Trusses Onto New Bearings
   - I. Remove Temporary Support System and Jacking and Cribbing
   - J. Pour Back Wall At East Abutment
6. Pier 6
   - A. Install Temporary Support System and Jacking and Cribbing
   - B. Jack Trusses 3 mm (1/8 Inch)
   - C. Remove Bearings
   - D. Perform Pier Repairs and New Construction
   - E. Install Bearings At Pier
   - F. Lower Trusses Onto New Bearings
   - G. Remove Temporary Support System and Jacking and Cribbing
7. Deck Replacement
   - A. Install Grid Deck System
   - B. Pour Concrete For The Deck

Note: Items I and II May Be Worked Independently of Each Other.

INDEX OF SHEETS

SIGNED	TTBB
CHECKED	LSH
DRAWN	jrs
CHECKED	TTBB

June 26, 1997
EXAMINED [signature] ENGINEER OF BRIDGE DESIGN
PASSED [signature] ENGINEER OF BRIDGES AND STRUCTURES

GENERAL DATA
F.A.P. RT. 315 SECTION 140B-I-4
FULTON AND MASON COUNTIES
STATION 10+646.69

1 Revised 7-16-97 STD

projects\rad00012\0630002.dgn Jul. 21, 1997 15:30:08

STATE OF ILLINOIS
DEPARTMENT OF TRANSPORTATION

ROUTE NO.	SECTION	COUNTY	TOTAL SHEETS	SHEET NO.
F.A.P. 315	140B-1-4	FULTON & MASON	123	23

SHEET NO. 3
123 SHEETS

BEAMS #1 & #6

Location	Station	Offset	Theoretical Grade Elevations	Theoretical Grade Elevations Adjusted For Dead Load Deflection
Bk. W. Abut.	10294.793	4.075	139.044	139.044
℄ Brg. W. Abut.	10295.352	4.075	139.062	139.062
A	10298.352	4.075	139.165	139.170
B	10301.352	4.075	139.269	139.282
C	10304.352	4.075	139.380	139.394
D	10307.352	4.075	139.496	139.510
E	10310.352	4.075	139.617	139.627
F	10313.352	4.075	139.743	139.749
G	10316.352	4.075	139.873	139.876
℄ Brg. Pier #1	10318.212	4.075	139.957	139.957
H	10321.212	4.075	140.095	140.100
I	10324.212	4.075	140.239	140.248
J	10327.212	4.075	140.387	140.400
K	10330.212	4.075	140.537	140.553
L	10333.212	4.075	140.687	140.705
M	10336.212	4.075	140.837	140.851
N	10339.212	4.075	140.987	140.998
O	10342.212	4.075	141.137	141.144
P	10345.212	4.075	141.287	141.290
℄ Brg. Pier #2	10346.863	4.075	141.370	141.370
Q	10349.863	4.075	141.520	141.524
R	10352.863	4.075	141.670	141.678
S	10355.863	4.075	141.820	141.832
T	10358.863	4.075	141.970	141.985
U	10361.863	4.075	142.120	142.137
V	10364.863	4.075	142.270	142.284
W	10367.863	4.075	142.420	142.431
X	10370.863	4.075	142.570	142.577
Y	10373.863	4.075	142.720	142.722
℄ Brg. Pier #3	10375.514	4.075	142.802	142.802
Z	10378.514	4.075	142.952	142.956
A1	10381.514	4.075	143.102	143.110
B1	10384.514	4.075	143.252	143.264
C1	10387.514	4.075	143.402	143.417
D1	10390.514	4.075	143.552	143.566
E1	10393.514	4.075	143.702	143.713
F1	10396.514	4.075	143.852	143.856
℄ W. Brg. Pier #4	10398.374	4.075	143.945	143.945
℄ Pier #4	10398.793	4.075	143.966	143.966

BEAMS #2 & #5

Location	Station	Offset	Theoretical Grade Elevations	Theoretical Grade Elevations Adjusted For Dead Load Deflection
Bk. W. Abut.	10294.793	-2.445	139.068	139.068
℄ Brg. W. Abut.	10295.352	-2.445	139.086	139.086
A	10298.352	2.445	139.188	139.196
B	10301.352	-2.445	139.294	139.310
C	10304.352	-2.445	139.405	139.423
D	10307.352	-2.445	139.520	139.539
E	10310.352	-2.445	139.641	139.654
F	10313.352	-2.445	139.767	139.775
G	10316.352	-2.445	139.898	139.901
℄ Brg. Pier #1	10318.212	2.445	139.981	139.981
H	10321.212	-2.445	140.120	140.125
I	10324.212	-2.445	140.263	140.275
J	10327.212	-2.445	140.412	140.428
K	10330.212	-2.445	140.562	140.582
L	10333.212	-2.445	140.712	140.734
M	10336.212	-2.445	140.862	140.880
N	10339.212	-2.445	141.012	141.025
O	10342.212	-2.445	141.162	141.170
P	10345.212	-2.445	141.312	141.315
℄ Brg. Pier #2	10346.863	-2.445	141.394	141.394
Q	10349.863	-2.445	141.544	141.550
R	10352.863	-2.445	141.694	141.705
S	10355.863	-2.445	141.844	141.860
T	10358.863	-2.445	141.994	142.014
U	10361.863	-2.445	142.144	142.167
V	10364.863	-2.445	142.294	142.312
W	10367.863	-2.445	142.444	142.458
X	10370.863	-2.445	142.594	142.603
Y	10373.863	-2.445	142.744	142.747
℄ Brg. Pier #3	10375.514	-2.445	142.827	142.827
Z	10378.514	-2.445	142.977	142.982
A1	10381.514	-2.445	143.127	143.136
B1	10384.514	-2.445	143.277	143.292
C1	10387.514	-2.445	143.427	143.446
D1	10390.514	-2.445	143.577	143.594
E1	10393.514	-2.445	143.727	143.741
F1	10396.514	-2.445	143.877	143.882
℄ W. Brg. Pier #4	10398.374	-2.445	143.970	143.970
℄ Pier #4	10398.793	-2.445	143.991	143.991

BEAMS #3 & #4

Location	Station	Offset	Theoretical Grade Elevations	Theoretical Grade Elevations Adjusted For Dead Load Deflection
Bk. W. Abut.	10294.793	-.815	139.093	139.093
℄ Brg. W. Abut.	10295.352	-.815	139.111	139.111
A	10298.352	-.815	139.212	139.221
B	10301.352	-.815	139.318	139.334
C	10304.352	-.815	139.429	139.447
D	10307.352	-.815	139.545	139.563
E	10310.352	-.815	139.666	139.679
F	10313.352	-.815	139.791	139.799
G	10316.352	-.815	139.922	139.925
℄ Brg. Pier #1	10318.212	-.815	140.006	140.006
H	10321.212	-.815	140.144	140.150
I	10324.212	-.815	140.288	140.299
J	10327.212	-.815	140.436	140.452
K	10330.212	-.815	140.586	140.606
L	10333.212	-.815	140.736	140.758
M	10336.212	-.815	140.886	140.904
N	10339.212	-.815	141.036	141.050
O	10342.212	-.815	141.186	141.195
P	10345.212	-.815	141.336	141.339
℄ Brg. Pier #2	10346.863	-.815	141.419	141.419
Q	10349.863	-.815	141.569	141.574
R	10352.863	-.815	141.719	141.729
S	10355.863	-.815	141.869	141.884
T	10358.863	-.815	142.019	142.039
U	10361.863	-.815	142.169	142.191
V	10364.863	-.815	142.319	142.337
W	10367.863	-.815	142.469	142.483
X	10370.863	-.815	142.619	142.627
Y	10373.863	-.815	142.769	142.772
℄ Brg. Pier #3	10375.514	-.815	142.851	142.851
Z	10378.514	-.815	143.001	143.006
A1	10381.514	-.815	143.151	143.161
B1	10384.514	-.815	143.301	143.316
C1	10387.514	.815	143.451	143.470
D1	10390.514	-.815	143.601	143.619
E1	10393.514	-.815	143.751	143.765
F1	10396.514	-.815	143.901	143.907
℄ W. Brg. Pier #4	10398.374	-.815	143.994	143.994
℄ Pier #4	10398.793	-.815	144.015	144.015

℄ ROADWAY

Location	Station	Offset	Theoretical Grade Elevations	Theoretical Grade Elevations Adjusted For Dead Load Deflection
Bk. W. Abut.	10294.793	.000	139.105	139.105
℄ Brg. W. Abut.	10295.352	.000	139.123	139.123
A	10298.352	.000	139.224	139.233
B	10301.352	.000	139.330	139.347
C	10304.352	.000	139.441	139.459
D	10307.352	.000	139.557	139.576
E	10310.352	.000	139.678	139.691
F	10313.352	.000	139.804	139.811
G	10316.352	.000	139.934	139.937
℄ Brg. Pier #1	10318.212	.000	140.018	140.018
H	10321.212	.000	140.156	140.162
I	10324.212	.000	140.300	140.311
J	10327.212	.000	140.448	140.464
K	10330.212	.000	140.598	140.618
L	10333.212	.000	140.748	140.771
M	10336.212	.000	140.898	140.916
N	10339.212	.000	141.048	141.062
O	10342.212	.000	141.198	141.207
P	10345.212	.000	141.348	141.351
℄ Brg. Pier #2	10346.863	.000	141.431	141.431
Q	10349.863	.000	141.581	141.586
R	10352.863	.000	141.731	141.742
S	10355.863	.000	141.881	141.896
T	10358.863	.000	142.031	142.051
U	10361.863	.000	142.181	142.203
V	10364.863	.000	142.331	142.349
W	10367.863	.000	142.481	142.495
X	10370.863	.000	142.631	142.640
Y	10373.863	.000	142.781	142.784
℄ Brg. Pier #3	10375.514	.000	142.863	142.863
Z	10378.514	.000	143.013	143.018
A1	10381.514	.000	143.163	143.173
B1	10384.514	.000	143.313	143.329
C1	10387.514	.000	143.463	143.483
D1	10390.514	.000	143.613	143.631
E1	10393.514	.000	143.763	143.777
F1	10396.514	.000	143.913	143.919
℄ W. Brg. Pier #4	10398.374	.000	144.006	144.006
℄ Pier #4	10398.793	.000	144.027	144.027

PROFILE GRADE LINE

Location	Station	Offset	Theoretical Grade Elevations	Theoretical Grade Elevations Adjusted For Dead Load Deflection
Bk. W. Abut.	10294.793	.685	139.095	139.095
℄ Brg. W. Abut.	10295.352	.685	139.113	139.113
A	10298.352	.685	139.214	139.222
B	10301.352	.685	139.320	139.336
C	10304.352	.685	139.431	139.449
D	10307.352	.685	139.547	139.565
E	10310.352	.685	139.668	139.681
F	10313.352	.685	139.793	139.801
G	10316.352	.685	139.924	139.927
℄ Brg. Pier #1	10318.212	.685	140.008	140.008
H	10321.212	.685	140.146	140.152
I	10324.212	.685	140.290	140.301
J	10327.212	.685	140.438	140.454
K	10330.212	.685	140.588	140.608
L	10333.212	.685	140.738	140.760
M	10336.212	.685	140.888	140.906
N	10339.212	.685	141.038	141.052
O	10342.212	.685	141.188	141.196
P	10345.212	.685	141.338	141.341
℄ Brg. Pier #2	10346.863	.685	141.421	141.421
Q	10349.863	.685	141.571	141.576
R	10352.863	.685	141.721	141.731
S	10355.863	.685	141.871	141.886
T	10358.863	.685	142.021	142.041
U	10361.863	.685	142.171	142.193
V	10364.863	.685	142.321	142.339
W	10367.863	.685	142.471	142.485
X	10370.863	.685	142.621	142.629
Y	10373.863	.685	142.771	142.774
℄ Brg. Pier #3	10375.514	.685	142.853	142.853
Z	10378.514	.685	143.003	143.008
A1	10381.514	.685	143.153	143.163
B1	10384.514	.685	143.303	143.318
C1	10387.514	.685	143.453	143.472
D1	10390.514	.685	143.603	143.621
E1	10393.514	.685	143.753	143.767
F1	10396.514	.685	143.903	143.908
℄ W. Brg. Pier #4	10398.374	.685	143.996	143.996
℄ Pier #4	10398.793	.685	144.017	144.017

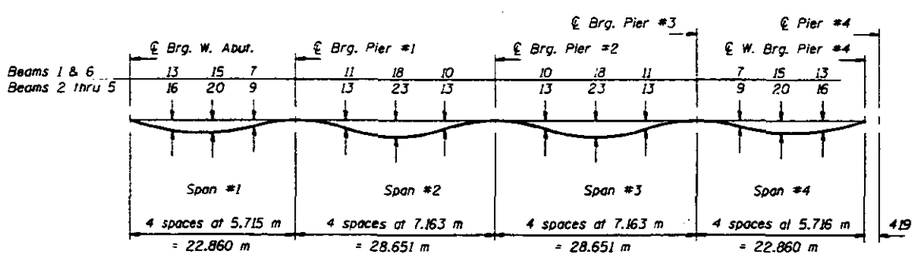

DEAD LOAD DEFLECTION DIAGRAM

(Includes weight of concrete only)

Note: The deflections shown in the diagram are not to be used in the field if the engineer is working from the grade elevations adjusted for dead load deflections as shown above.
All elevations, stations and offsets are in meters.
Work this sheet with sheet #4 of 123.

DESIGNED	JLC
CHECKED	TTPB
DRAWN	R. Doty
CHECKED	JLC TTPB

June 26, 1997

DIRECTOR OF HIGHWAYS ENGINEERING

ENGINEER OF SPECIAL DESIGN

PASSED

ENGINEER OF BRIDGES AND STRUCTURES

E-S (M) 7-1-94

TOP OF SLAB ELEVATIONS
SPANS #1 THRU #4
F.A.P. RT. 315 SECTION 140B-1-4
FULTON AND MASON COUNTIES
STATION 10+646.69

STATE OF ILLINOIS
DEPARTMENT OF TRANSPORTATION

F.A.P. 315	140B-I-4	FULTON & MASON		24

SHEET NO. 4
123 SHEETS

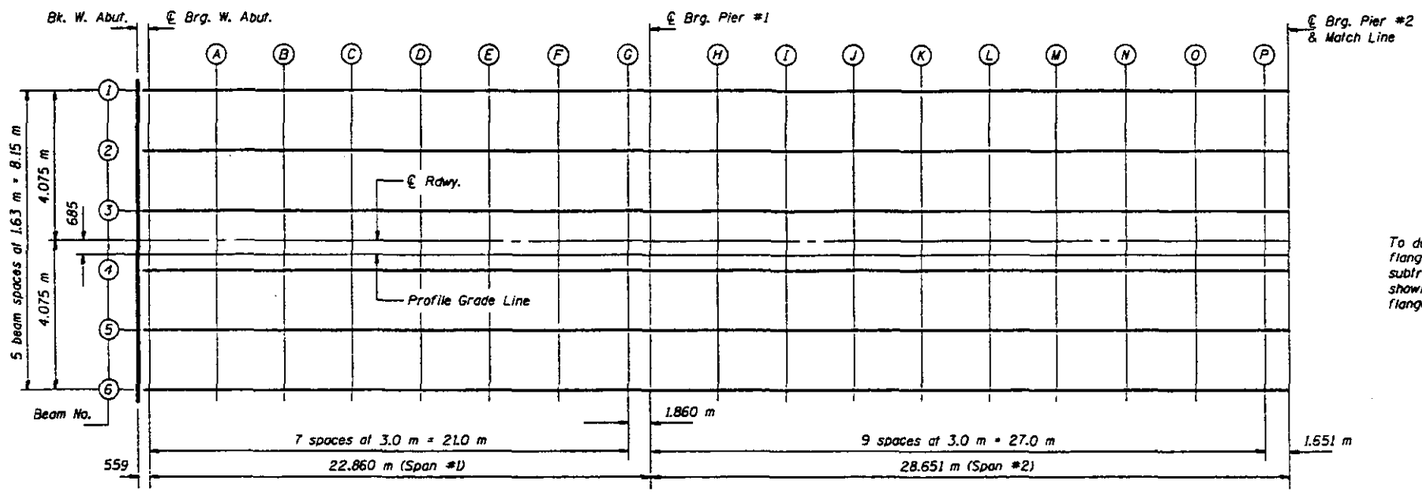

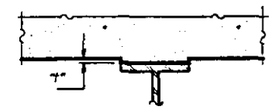

To determine "t": After all structural steel has been erected, elevations of the top flanges of the beams shall be taken at intervals shown on sheet #3 of 123. These elevations subtracted from the "Theoretical Grade Elevations Adjusted for Dead Load Deflections" shown on sheet #3 of 123, minus slab thickness, equals the fillet heights "t" above top flange of beams.

FILLET HEIGHTS

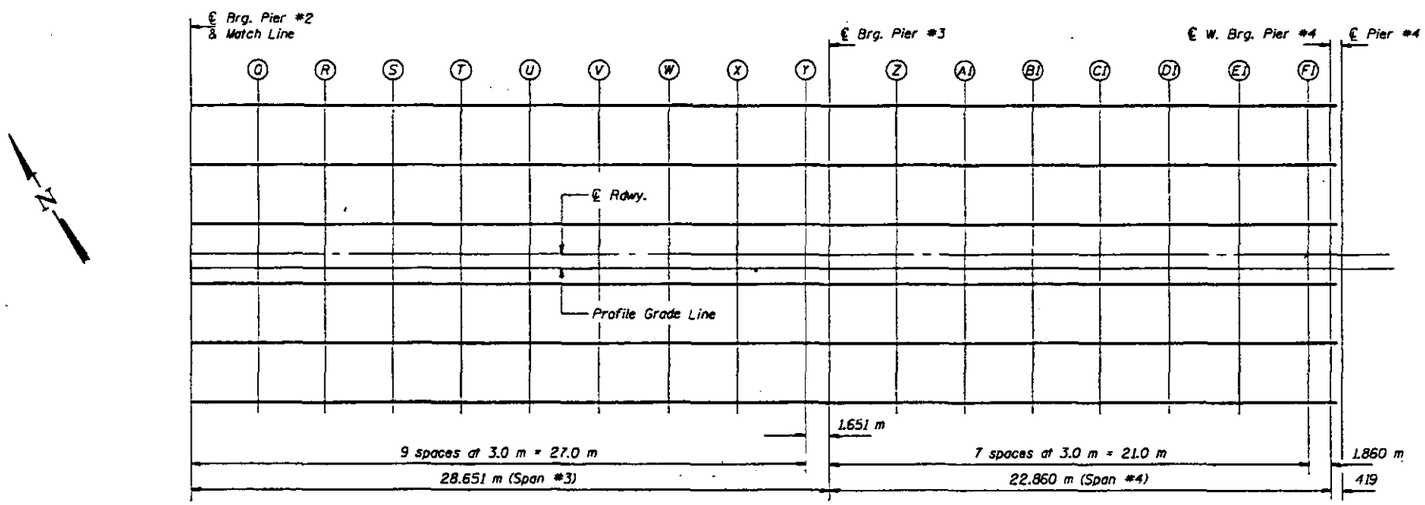

Note: Work this sheet with sheet #3 of 123.

PLAN-SPANS #1 THRU #4

DESIGNED	JLC
CHECKED	TTBB
DRAWN	R. Doty
CHECKED	JLC TTBB

June 26, 1997

ENGINEER OF BRIDGE DESIGN

ENGINEER OF BRIDGE AND STRUCTURES

TOP OF SLAB ELEVATIONS
SPANS #1 THRU #4
F.A.P. RT. 315 SECTION 140B-I-4
FULTON AND MASON COUNTIES
STATION 10+646.69

ROUTE NO.	SECTION	COUNTY	DISTRICT	SHEET NO.
F.A.P. 315	140B-I-4	FULTON & MASON		25
FED. ROAD DIST. NO. 7	ILLINOIS	FED. AID PROJECT-		

SHEET NO. 5
123 SHEETS

STATE OF ILLINOIS
DEPARTMENT OF TRANSPORTATION

STRINGERS #1 & #6

Location	Station	Offset	Theoretical Grade Elevations	Theoretical Grade Elevations Adjusted For Dead Load Deflection
℄ Pier #4	10398.794	4.075	143.966	143.966
℄ E. Brg. Pier #4	10398.883	4.075	143.971	143.971
G1	10399.183	4.075	143.986	143.986
H1	10403.455	4.075	144.199	144.205
I1	10407.727	4.075	144.413	144.424
℄ FB2	10408.027	4.075	144.428	144.440
J1	10408.327	4.075	144.443	144.455
K1	10412.599	4.075	144.657	144.674
L1	10416.871	4.075	144.870	144.893
℄ FB3	10417.171	4.075	144.885	144.908
M1	10417.471	4.075	144.900	144.923
N1	10421.743	4.075	145.114	145.139
O1	10426.015	4.075	145.327	145.353
℄ FB4	10426.315	4.075	145.342	145.369
P1	10426.615	4.075	145.357	145.384
Q1	10430.887	4.075	145.571	145.599
R1	10435.159	4.075	145.785	145.815
℄ FB5	10435.459	4.075	145.800	145.830
S1	10435.759	4.075	145.815	145.845
T1	10440.031	4.075	146.028	146.056
U1	10444.303	4.075	146.242	146.269
℄ FB6	10444.603	4.075	146.257	146.285
V1	10444.903	4.075	146.272	146.298
W1	10449.175	4.075	146.485	146.510
X1	10453.447	4.075	146.699	146.722
℄ FB7	10453.747	4.075	146.714	146.737
Y1	10454.047	4.075	146.729	146.752
Z1	10458.319	4.075	146.943	146.960
A2	10462.591	4.075	147.156	147.168
℄ FB8	10462.891	4.075	147.171	147.183
B2	10463.191	4.075	147.186	147.197
C2	10467.463	4.075	147.400	147.406
D2	10471.735	4.075	147.613	147.613
℄ W. Brg. Pier #5	10472.035	4.075	147.628	147.628
℄ Pier #5	10472.518	4.075	147.653	147.653

STRINGERS #2 & #5

Location	Station	Offset	Theoretical Grade Elevations	Theoretical Grade Elevations Adjusted For Dead Load Deflection
℄ Pier #4	10398.794	-2.445	143.991	143.991
℄ E. Brg. Pier #4	10398.883	-2.445	143.995	143.995
G1	10399.183	-2.445	144.010	144.010
H1	10403.455	-2.445	144.224	144.230
I1	10407.727	-2.445	144.437	144.448
℄ FB2	10408.027	2.445	144.452	144.464
J1	10408.327	-2.445	144.467	144.479
K1	10412.599	-2.445	144.681	144.698
L1	10416.871	-2.445	144.895	144.918
℄ FB3	10417.171	-2.445	144.910	144.933
M1	10417.471	-2.445	144.925	144.948
N1	10421.743	-2.445	145.138	145.163
O1	10426.015	-2.445	145.352	145.378
℄ FB4	10426.315	-2.445	145.367	145.394
P1	10426.615	-2.445	145.382	145.409
Q1	10430.887	-2.445	145.595	145.623
R1	10435.159	-2.445	145.809	145.839
℄ FB5	10435.459	-2.445	145.824	145.854
S1	10435.759	-2.445	145.839	145.869
T1	10440.031	-2.445	146.053	146.081
U1	10444.303	-2.445	146.266	146.293
℄ FB6	10444.603	-2.445	146.281	146.307
V1	10444.903	-2.445	146.296	146.322
W1	10449.175	-2.445	146.510	146.535
X1	10453.447	-2.445	146.723	146.746
℄ FB7	10453.747	-2.445	146.738	146.761
Y1	10454.047	-2.445	146.753	146.776
Z1	10458.319	-2.445	146.967	146.984
A2	10462.591	-2.445	147.181	147.193
℄ FB8	10462.891	-2.445	147.196	147.208
B2	10463.191	-2.445	147.211	147.222
C2	10467.463	-2.445	147.424	147.430
D2	10471.735	-2.445	147.638	147.638
℄ W. Brg. Pier #5	10472.035	-2.445	147.653	147.653
℄ Pier #5	10472.518	-2.445	147.677	147.677

STRINGERS #3 & #4

Location	Station	Offset	Theoretical Grade Elevations	Theoretical Grade Elevations Adjusted For Dead Load Deflection
℄ Pier #4	10398.794	-.815	144.015	144.015
℄ E. Brg. Pier #4	10398.883	-.815	144.020	144.020
G1	10399.183	-.815	144.035	144.035
H1	10403.455	-.815	144.248	144.254
I1	10407.727	-.815	144.462	144.473
℄ FB2	10408.027	-.815	144.477	144.489
J1	10408.327	-.815	144.492	144.504
K1	10412.599	-.815	144.705	144.722
L1	10416.871	-.815	144.919	144.942
℄ FB3	10417.171	-.815	144.934	144.957
M1	10417.471	-.815	144.949	144.972
N1	10421.743	-.815	145.163	145.188
O1	10426.015	-.815	145.376	145.402
℄ FB4	10426.315	-.815	145.391	145.418
P1	10426.615	-.815	145.406	145.433
Q1	10430.887	-.815	145.620	145.648
R1	10435.159	-.815	145.833	145.863
℄ FB5	10435.459	-.815	145.848	145.878
S1	10435.759	-.815	145.863	145.893
T1	10440.031	-.815	146.077	146.105
U1	10444.303	-.815	146.291	146.318
℄ FB6	10444.603	-.815	146.306	146.332
V1	10444.903	-.815	146.321	146.347
W1	10449.175	-.815	146.534	146.559
X1	10453.447	-.815	146.748	146.771
℄ FB7	10453.747	-.815	146.763	146.786
Y1	10454.047	-.815	146.778	146.801
Z1	10458.319	-.815	146.991	147.008
A2	10462.591	-.815	147.205	147.217
℄ FB8	10462.891	-.815	147.220	147.232
B2	10463.191	-.815	147.235	147.246
C2	10467.463	-.815	147.449	147.455
D2	10471.735	-.815	147.662	147.662
℄ W. Brg. Pier #5	10472.035	-.815	147.677	147.677
℄ Pier #5	10472.518	-.815	147.701	147.701

℄ ROADWAY

Location	Station	Offset	Theoretical Grade Elevations	Theoretical Grade Elevations Adjusted For Dead Load Deflection
℄ Pier #4	10398.794	.000	144.027	144.027
℄ E. Brg. Pier #4	10398.883	.000	144.032	144.032
G1	10399.183	.000	144.047	144.047
H1	10403.455	.000	144.261	144.267
I1	10407.727	.000	144.474	144.485
℄ FB2	10408.027	.000	144.489	144.501
J1	10408.327	.000	144.504	144.516
K1	10412.599	.000	144.718	144.735
L1	10416.871	.000	144.931	144.954
℄ FB3	10417.171	.000	144.946	144.969
M1	10417.471	.000	144.961	144.984
N1	10421.743	.000	145.175	145.200
O1	10426.015	.000	145.389	145.415
℄ FB4	10426.315	.000	145.404	145.431
P1	10426.615	.000	145.419	145.446
Q1	10430.887	.000	145.632	145.660
R1	10435.159	.000	145.846	145.876
℄ FB5	10435.459	.000	145.861	145.891
S1	10435.759	.000	145.876	145.906
T1	10440.031	.000	146.089	146.117
U1	10444.303	.000	146.303	146.330
℄ FB6	10444.603	.000	146.318	146.344
V1	10444.903	.000	146.333	146.359
W1	10449.175	.000	146.547	146.572
X1	10453.447	.000	146.760	146.783
℄ FB7	10453.747	.000	146.775	146.798
Y1	10454.047	.000	146.790	146.813
Z1	10458.319	.000	147.004	147.021
A2	10462.591	.000	147.217	147.229
℄ FB8	10462.891	.000	147.232	147.244
B2	10463.191	.000	147.247	147.258
C2	10467.463	.000	147.461	147.467
D2	10471.735	.000	147.675	147.675
℄ W. Brg. Pier #5	10472.035	.000	147.690	147.690
℄ Pier #5	10472.518	.000	147.714	147.714

PROFILE GRADE LINE

Location	Station	Offset	Theoretical Grade Elevations	Theoretical Grade Elevations Adjusted For Dead Load Deflection
℄ Pier #4	10398.794	.685	144.017	144.017
℄ E. Brg. Pier #4	10398.883	.685	144.022	144.022
G1	10399.183	.685	144.037	144.037
H1	10403.455	.685	144.250	144.256
I1	10407.727	.685	144.464	144.475
℄ FB2	10408.027	.685	144.479	144.491
J1	10408.327	.685	144.494	144.506
K1	10412.599	.685	144.707	144.724
L1	10416.871	.685	144.921	144.944
℄ FB3	10417.171	.685	144.936	144.959
M1	10417.471	.685	144.951	144.974
N1	10421.743	.685	145.165	145.190
O1	10426.015	.685	145.378	145.404
℄ FB4	10426.315	.685	145.393	145.420
P1	10426.615	.685	145.408	145.435
Q1	10430.887	.685	145.622	145.650
R1	10435.159	.685	145.835	145.865
℄ FB5	10435.459	.685	145.850	145.880
S1	10435.759	.685	145.865	145.895
T1	10440.031	.685	146.079	146.107
U1	10444.303	.685	146.293	146.320
℄ FB6	10444.603	.685	146.308	146.334
V1	10444.903	.685	146.323	146.349
W1	10449.175	.685	146.536	146.561
X1	10453.447	.685	146.750	146.773
℄ FB7	10453.747	.685	146.765	146.788
Y1	10454.047	.685	146.780	146.803
Z1	10458.319	.685	146.993	147.010
A2	10462.591	.685	147.207	147.219
℄ FB8	10462.891	.685	147.222	147.234
B2	10463.191	.685	147.237	147.248
C2	10467.463	.685	147.451	147.457
D2	10471.735	.685	147.664	147.664
℄ W. Brg. Pier #5	10472.035	.685	147.679	147.679
℄ Pier #5	10472.518	.685	147.703	147.703

Note: For Elevations Location Plan see sheet #6 of 123.

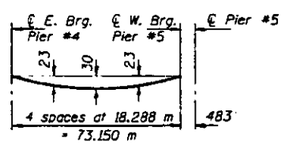

DEAD LOAD DEFLECTION DIAGRAM

(Includes weight of concrete only)

Note: The above deflections are not to be used in the field if the engineer is working from the grade elevations adjusted for dead load deflections as shown.

DESIGNED	LSH
CHECKED	TTP.S. JLC
DRAWN	R. Doty
CHECKED	TTP.S. LSH

June 26, 1997

CHECKED Jorge L. Kasper — ENGINEER OF STEEL DESIGN

PASSED Ralph E. Anderson — ENGINEER OF BRIDGE AND STRUCTURES

TOP OF SLAB ELEVATIONS
TRUSS SPAN #5
F.A.P. RT. 315 SECTION 140B-I-4
FULTON AND MASON COUNTIES
STATION 10+646.69

STATE OF ILLINOIS
DEPARTMENT OF TRANSPORTATION

ROUTE NO.	SECTION	COUNTY	TOTAL SHEETS	SHEET NO.	
F.A.P. 315	140B-I-4	FULTON & MASON		26	SHEET NO. 6 / 123 SHEETS

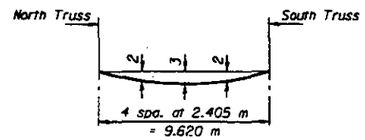

DEAD LOAD DEFLECTION DIAGRAM (FLOOR BEAM ONLY)

(Includes weight of concrete only)

Deflections for floor beams are shown above. These deflections are not included in the "Theoretical Grade Elevations Adjusted For Dead Load Deflection" listed in the Table of Deck Elevations.

Deflections for stringers are small enough to be neglected.

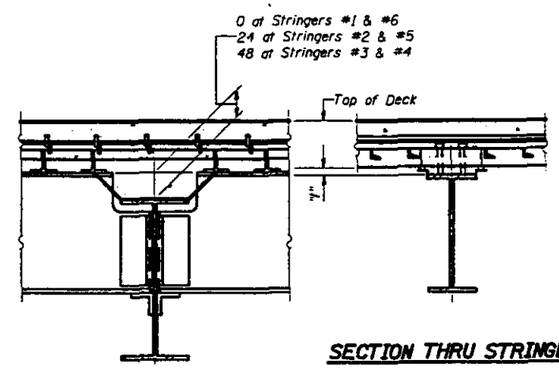

SECTION THRU STRINGER

SECTION THRU FLOOR BEAM

To determine "T": After all structural steel has been erected, elevations of the top flanges of the stringers shall be taken at intervals shown below.
These elevations subtracted from the "Theoretical Grade Elevations Adjusted for Dead Load Deflection" minus slab thickness, equals the fillet heights "T" above top flange of stringer.

FILLET HEIGHTS

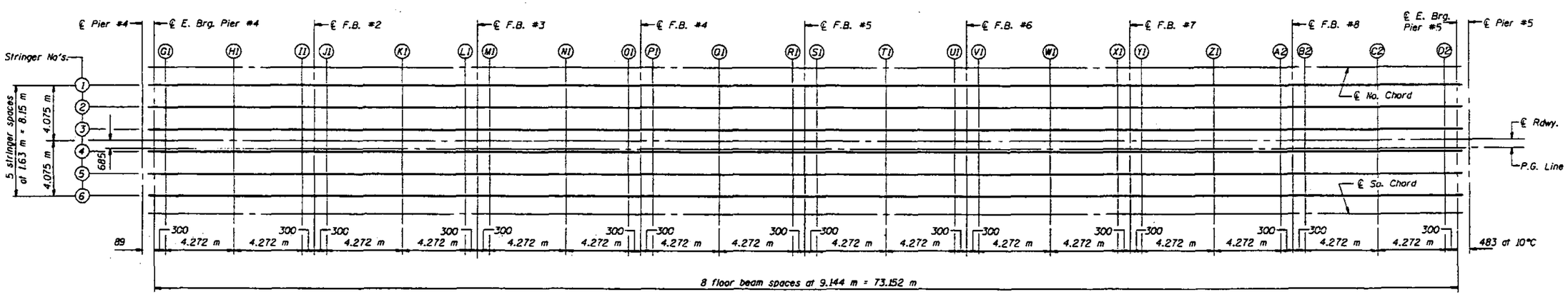

PLAN

DESIGNED	LSM
CHECKED	TBB JLC
DRAWN	R. Doty
CHECKED	TBB LSM

June 26, 1997

CHIEFS ENGINEER OF BRIDGE DESIGN

ENGINEER OF BRIDGES AND STRUCTURES

TOP OF SLAB ELEVATIONS
TRUSS SPAN #5
F.A.P. RT. 315 SECTION 140B-I-4
FULTON AND MASON COUNTIES
STATION 10+646.69

STATE OF ILLINOIS
DEPARTMENT OF TRANSPORTATION

ROUTE NO.	SECTION	COUNTY	TOTAL SHEETS	SHEET NO.
F.A.P. 315	140B-I-4	FULTON & MASON	27	7
FED. ROAD DIST. NO. 7	ILLINOIS	FED. AID PROJECT-		

SHEET NO. 7
123 SHEETS

STRINGERS #1 & #6

Location	Station	Offset	Theoretical Grade Elevations	Theoretical Grade Elevations Adjusted For Dead Load Deflection
℄ Pier #5	10472.518	4.075	147.653	147.653
℄ E. Brg. Pier #5	10472.950	4.075	147.674	147.674
E2	10473.250	4.075	147.689	147.689
F2	10477.522	4.075	147.903	147.907
G2	10481.794	4.075	148.116	148.124
℄ FB11	10482.094	4.075	148.131	148.140
H2	10482.394	4.075	148.146	148.155
I2	10486.666	4.075	148.360	148.373
J2	10490.938	4.075	148.574	148.591
℄ FB12	10491.238	4.075	148.589	148.606
K2	10491.538	4.075	148.604	148.622
L2	10495.810	4.075	148.817	148.839
M2	10500.082	4.075	149.031	149.057
℄ FB13	10500.382	4.075	149.046	149.072
N2	10500.682	4.075	149.061	149.087
O2	10504.954	4.075	149.274	149.301
P2	10509.226	4.075	149.488	149.516
℄ FB14	10509.526	4.075	149.503	149.531
Q2	10509.826	4.075	149.518	149.546
R2	10514.098	4.075	149.732	149.762
S2	10518.370	4.075	149.945	149.976
℄ FB15	10518.670	4.075	149.960	149.991
T2	10518.970	4.075	149.975	150.006
U2	10523.242	4.075	150.189	150.221
V2	10527.514	4.075	150.402	150.435
℄ FB16	10527.814	4.075	150.417	150.450
W2	10528.114	4.075	150.432	150.465
X2	10532.386	4.075	150.646	150.676
Y2	10536.658	4.075	150.860	150.888
℄ FB17	10536.958	4.075	150.875	150.902
Z2	10537.258	4.075	150.890	150.917
A3	10541.530	4.075	151.103	151.128
B3	10545.802	4.075	151.317	151.339
℄ FB18	10546.102	4.075	151.332	151.354
C3	10546.402	4.075	151.347	151.368
D3	10550.674	4.075	151.560	151.579
E3	10554.946	4.075	151.774	151.790
℄ FB19	10555.246	4.075	151.789	151.805
F3	10555.546	4.075	151.804	151.820
G3	10559.818	4.075	152.018	152.031
H3	10564.090	4.075	152.231	152.242
℄ FB20	10564.390	4.075	152.246	152.257
I3	10564.690	4.075	152.261	152.271
J3	10568.962	4.075	152.475	152.483
K3	10573.234	4.075	152.688	152.694
℄ FB21	10573.534	4.075	152.703	152.708
L3	10573.834	4.075	152.718	152.723
M3	10578.106	4.075	152.932	152.935
N3	10582.378	4.075	153.146	153.146
℄ Pier #6	10582.678	4.075	153.161	153.161
O3	10582.978	4.075	153.176	153.176
P3	10587.250	4.075	153.381	153.383
Q3	10591.522	4.075	153.572	153.576
℄ FB23	10591.822	4.075	153.585	153.589
R3	10592.122	4.075	153.598	153.602
S3	10596.394	4.075	153.773	153.779
T3	10600.666	4.075	153.934	153.942
℄ FB24	10600.966	4.075	153.944	153.953
U3	10601.266	4.075	153.955	153.964
V3	10605.538	4.075	154.099	154.110
W3	10609.810	4.075	154.230	154.243
℄ FB25	10610.110	4.075	154.238	154.251
X3	10610.410	4.075	154.247	154.260
Y3	10614.682	4.075	154.361	154.376
Z3	10618.954	4.075	154.460	154.477
℄ FB26	10619.254	4.075	154.467	154.484
A4	10619.554	4.075	154.473	154.490
B4	10623.826	4.075	154.557	154.576
C4	10628.098	4.075	154.626	154.647
℄ FB27	10628.398	4.075	154.630	154.651
D4	10628.698	4.075	154.634	154.656
E4	10632.970	4.075	154.687	154.711
F4	10637.242	4.075	154.726	154.752
℄ FB28	10637.542	4.075	154.728	154.754
G4	10637.842	4.075	154.730	154.756
H4	10642.114	4.075	154.753	154.781
I4	10646.386	4.075	154.761	154.791
℄ FB29	10646.686	4.075	154.761	154.791

STRINGERS #1 & #6 CONTINUED

Location	Station	Offset	Theoretical Grade Elevations	Theoretical Grade Elevations Adjusted For Dead Load Deflection
J4	10646.986	4.075	154.761	154.791
K4	10651.258	4.075	154.753	154.781
L4	10655.530	4.075	154.730	154.756
℄ FB30	10655.830	4.075	154.728	154.754
M4	10656.130	4.075	154.726	154.752
N4	10660.402	4.075	154.687	154.711
O4	10664.674	4.075	154.634	154.656
℄ FB31	10664.974	4.075	154.630	154.651
P4	10665.274	4.075	154.626	154.647
Q4	10669.546	4.075	154.557	154.576
R4	10673.818	4.075	154.473	154.490
℄ FB32	10674.118	4.075	154.467	154.484
S4	10674.418	4.075	154.460	154.477
T4	10678.690	4.075	154.361	154.376
U4	10682.962	4.075	154.247	154.260
℄ FB33	10683.262	4.075	154.238	154.251
V4	10683.562	4.075	154.230	154.243
W4	10687.834	4.075	154.099	154.110
X4	10692.106	4.075	153.955	153.964
℄ FB34	10692.406	4.075	153.944	153.953
Y4	10692.706	4.075	153.933	153.941
Z4	10696.978	4.075	153.773	153.779
A5	10701.250	4.075	153.598	153.602
℄ FB35	10701.550	4.075	153.585	153.589
B5	10701.850	4.075	153.572	153.576
C5	10706.122	4.075	153.381	153.383
D5	10710.394	4.075	153.175	153.175
℄ Pier #7	10710.694	4.075	153.160	153.160
E5	10710.994	4.075	153.145	153.145
F5	10715.266	4.075	152.932	153.935
G5	10719.538	4.075	152.718	152.723
℄ FB37	10719.838	4.075	152.703	152.708
H5	10720.138	4.075	152.688	152.694
I5	10724.410	4.075	152.475	152.483
J5	10728.682	4.075	152.261	152.271
℄ FB38	10728.982	4.075	152.246	152.257
K5	10729.282	4.075	152.231	152.242
L5	10733.554	4.075	152.017	152.030
M5	10737.826	4.075	151.804	151.820
℄ FB39	10738.126	4.075	151.789	151.805
N5	10738.426	4.075	151.774	151.790
O5	10742.698	4.075	151.560	151.579
P5	10746.970	4.075	151.347	151.368
℄ FB40	10747.270	4.075	151.332	151.354
Q5	10747.570	4.075	151.317	151.339
R5	10751.842	4.075	151.103	151.128
S5	10756.114	4.075	150.889	150.916
℄ FB41	10756.414	4.075	150.874	150.901
T5	10756.714	4.075	150.859	150.887
U5	10760.986	4.075	150.646	150.676
V5	10765.258	4.075	150.432	150.465
℄ FB42	10765.558	4.075	150.417	150.450
W5	10765.858	4.075	150.402	150.435
X5	10770.130	4.075	150.189	150.221
Y5	10774.402	4.075	149.975	150.006
℄ FB43	10774.702	4.075	149.960	149.991
Z5	10775.002	4.075	149.945	149.976
A6	10779.274	4.075	149.731	149.761
B6	10783.546	4.075	149.518	149.546
℄ FB44	10783.846	4.075	149.503	149.531
C6	10784.146	4.075	149.488	149.516
D6	10788.418	4.075	149.274	149.301
E6	10792.690	4.075	149.061	149.087
℄ FB45	10792.990	4.075	149.046	149.072
F6	10793.290	4.075	149.031	149.057
G6	10797.562	4.075	148.817	148.839
H6	10801.834	4.075	148.603	148.621
℄ FB46	10802.134	4.075	148.588	148.605
I6	10802.434	4.075	148.573	148.590
J6	10806.706	4.075	148.360	148.373
K6	10810.978	4.075	148.146	148.155
℄ FB47	10811.278	4.075	148.131	148.140
L6	10811.578	4.075	148.116	148.124
M6	10815.850	4.075	147.903	147.907
N6	10820.122	4.075	147.689	147.689
℄ Brg. E. Abut.	10820.422	4.075	147.674	147.674
Bk. E. Abut.	10821.107	4.075	147.640	147.640

STRINGERS #2 & #5

Location	Station	Offset	Theoretical Grade Elevations	Theoretical Grade Elevations Adjusted For Dead Load Deflection
℄ Pier #5	10472.518	-2.445	147.677	147.677
℄ E. Brg. Pier #5	10472.950	-2.445	147.699	147.699
E2	10473.250	-2.445	147.714	147.714
F2	10477.522	-2.445	147.927	147.931
G2	10481.794	-2.445	148.141	148.149
℄ FB11	10482.094	-2.445	148.156	148.165
H2	10482.394	-2.445	148.171	148.180
I2	10486.666	-2.445	148.384	148.397
J2	10490.938	-2.445	148.598	148.615
℄ FB12	10491.238	-2.445	148.613	148.630
K2	10491.538	-2.445	148.628	148.646
L2	10495.810	-2.445	148.842	148.864
M2	10500.082	-2.445	149.055	149.081
℄ FB13	10500.382	-2.445	149.070	149.096
N2	10500.682	-2.445	149.085	149.111
O2	10504.954	-2.445	149.299	149.326
P2	10509.226	-2.445	149.512	149.540
℄ FB14	10509.526	-2.445	149.527	149.555
Q2	10509.826	-2.445	149.542	149.570
R2	10514.098	-2.445	149.756	149.786
S2	10518.370	-2.445	149.970	150.001
℄ FB15	10518.670	-2.445	149.985	150.016
T2	10518.970	-2.445	150.000	150.031
U2	10523.242	-2.445	150.213	150.245
V2	10527.514	-2.445	150.427	150.460
℄ FB16	10527.814	-2.445	150.442	150.475
W2	10528.114	-2.445	150.457	150.490
X2	10532.386	-2.445	150.670	150.700
Y2	10536.658	-2.445	150.884	150.912
℄ FB17	10536.958	-2.445	150.899	150.926
Z2	10537.258	-2.445	150.914	150.941
A3	10541.530	-2.445	151.128	151.153
B3	10545.802	-2.445	151.341	151.363
℄ FB18	10546.102	-2.445	151.356	151.378
C3	10546.402	-2.445	151.371	151.392
D3	10550.674	-2.445	151.585	151.604
E3	10554.946	-2.445	151.798	151.814
℄ FB19	10555.246	-2.445	151.813	151.829
F3	10555.546	-2.445	151.828	151.844
G3	10559.818	-2.445	152.042	152.055
H3	10564.090	-2.445	152.256	152.267
℄ FB20	10564.390	-2.445	152.271	152.282
I3	10564.690	-2.445	152.286	152.296
J3	10568.962	-2.445	152.499	152.507
K3	10573.234	-2.445	152.713	152.719
℄ FB21	10573.534	-2.445	152.728	152.733
L3	10573.834	-2.445	152.743	152.748
M3	10578.106	-2.445	152.956	152.959
N3	10582.378	-2.445	153.170	153.170
℄ Pier #6	10582.678	-2.445	153.185	153.185
O3	10582.978	-2.445	153.200	153.200
P3	10587.250	-2.445	153.405	153.407
Q3	10591.522	-2.445	153.597	153.601
℄ FB23	10591.822	-2.445	153.610	153.614
R3	10592.122	-2.445	153.622	153.626
S3	10596.394	-2.445	153.797	153.803
T3	10600.666	-2.445	153.958	153.966
℄ FB24	10600.966	-2.445	153.969	153.978
U3	10601.266	-2.445	153.979	153.988
V3	10605.538	-2.445	154.124	154.135
W3	10609.810	-2.445	154.254	154.267
℄ FB25	10610.110	-2.445	154.263	154.276
X3	10610.410	-2.446	154.271	154.284
Y3	10614.682	-2.445	154.385	154.400
Z3	10618.954	-2.445	154.485	154.502
℄ FB26	10619.254	-2.445	154.491	154.508
A4	10619.554	-2.445	154.498	154.515
B4	10623.826	-2.445	154.581	154.600
C4	10628.098	-2.445	154.650	154.671
℄ FB27	10628.398	-2.445	154.655	154.676
D4	10628.698	-2.445	154.659	154.681
E4	10632.970	-2.445	154.712	154.736
F4	10637.242	-2.445	154.750	154.776
℄ FB28	10637.542	-2.445	154.752	154.778
G4	10637.842	2.445	154.755	154.781
H4	10642.114	-2.445	154.777	154.805
I4	10646.386	-2.445	154.785	154.815
℄ FB29	10646.686	-2.445	154.785	154.815

STRINGERS #2 & #5 CONTINUED

Location	Station	Offset	Theoretical Grade Elevations	Theoretical Grade Elevations Adjusted For Dead Load Deflection
J4	10646.986	-2.445	154.785	154.815
K4	10651.258	-2.445	154.777	154.805
L4	10655.530	-2.445	154.755	154.781
℄ FB30	10655.830	-2.445	154.752	154.778
M4	10656.130	-2.445	154.750	154.776
N4	10660.402	-2.445	154.712	154.736
O4	10664.674	-2.445	154.659	154.681
℄ FB31	10664.974	-2.445	154.654	154.675
P4	10665.274	-2.445	154.650	154.671
Q4	10669.546	-2.445	154.581	154.600
R4	10673.818	-2.445	154.498	154.515
℄ FB32	10674.118	-2.445	154.491	154.508
S4	10674.418	2.445	154.485	154.502
T4	10678.690	-2.445	154.385	154.400
U4	10682.962	-2.445	154.271	154.284
℄ FB33	10683.262	-2.445	154.263	154.276
V4	10683.562	-2.445	154.254	154.267
W4	10687.834	-2.445	154.124	154.135
X4	10692.106	-2.445	153.979	153.988
℄ FB34	10692.406	-2.445	153.969	153.978
Y4	10692.706	-2.445	153.958	153.966
Z4	10696.978	-2.445	153.797	153.803
A5	10701.250	-2.445	153.622	153.626
℄ FB35	10701.550	-2.445	153.609	153.613
B5	10701.850	-2.445	153.597	153.601
C5	10706.122	-2.445	153.405	153.407
D5	10710.394	2.445	153.200	153.200
℄ Pier #7	10710.694	-2.445	153.185	153.185
E5	10710.994	-2.445	153.170	153.170
F5	10715.266	-2.445	152.956	152.959
G5	10719.538	-2.445	152.743	152.748
℄ FB37	10719.838	-2.445	152.728	152.733
H5	10720.138	-2.445	152.713	152.719
I5	10724.410	-2.445	152.499	152.507
J5	10728.682	-2.445	152.285	152.295
℄ FB38	10728.982	-2.445	152.270	152.281
K5	10729.282	-2.445	152.255	152.266
L5	10733.554	-2.445	152.042	152.055
M5	10737.826	-2.445	151.828	151.844
℄ FB39	10738.126	-2.445	151.813	151.829
N5	10738.426	-2.445	151.798	151.814
O5	10742.698	-2.445	151.585	151.604
P5	10746.970	-2.445	151.371	151.392
℄ FB40	10747.270	-2.445	151.356	151.378
Q5	10747.570	-2.445	151.341	151.363
R5	10751.842	-2.445	151.127	151.152
S5	10756.114	-2.445	150.914	150.941
℄ FB41	10756.414	-2.445	150.899	150.926
T5	10756.714	-2.445	150.884	150.912
U5	10760.986	-2.445	150.670	150.700
V5	10765.258	-2.445	150.457	150.490
℄ FB42	10765.558	-2.445	150.442	150.475
W5	10765.858	-2.445	150.427	150.460
X5	10770.130	-2.445	150.213	150.245
Y5	10774.402	-2.445	149.999	150.030
℄ FB43	10774.702	-2.445	149.984	150.015
Z5	10775.002	-2.445	149.969	150.000
A6	10779.274	-2.445	149.756	149.786
B6	10783.546	-2.445	149.542	149.570
℄ FB44	10783.846	-2.445	149.527	149.555
C6	10784.146	-2.445	149.512	149.540
D6	10788.418	-2.445	149.299	149.326
E6	10792.690	-2.445	149.085	149.111
℄ FB45	10792.990	-2.445	149.070	149.096
F6	10793.290	-2.445	149.055	149.081
G6	10797.562	-2.445	148.841	148.863
H6	10801.834	-2.445	148.628	148.646
℄ FB46	10802.134	-2.445	148.615	148.630
I6	10802.434	-2.445	148.598	148.615
J6	10806.706	-2.445	148.384	148.397
K6	10810.978	-2.445	148.171	148.180
℄ FB47	10811.278	-2.445	148.156	148.165
L6	10811.578	-2.445	148.141	148.149
M6	10815.850	-2.445	147.927	147.931
N6	10820.122	-2.445	147.713	147.713
℄ Brg. E. Abut.	10820.422	-2.445	147.698	147.698
Bk. E. Abut.	10821.107	-2.445	147.664	147.664

Note: For Elevations Location Plan see sheets #10 and #11 of 123.

DESIGNED	LSH
CHECKED	TBB JLC
DRAWN	R. Daly
CHECKED	TBB LSH

June 26, 1997

EXAMINED Engr. of Highway Design
PASSED Engr. of Bridges and Structures

TOP OF SLAB ELEVATIONS
TRUSS SPANS #6 THRU #8
F.A.P. RT. 315 SECTION 140B-I-4
FULTON AND MASON COUNTIES
STATION 10+646.69

STATE OF ILLINOIS
DEPARTMENT OF TRANSPORTATION

ROUTE NO.	SECTION	COUNTY	TOTAL SHEETS	SHEET NO.
F.A.P. 315	140B-1-4	FULTON & MASON	28	SHEET NO. 8 / 123 SHEETS
PROJ. NUMB. SEQ. NO. 7		ALL PARTS	PROJ. NO. PREVIOUSLY	

STRINGERS #3 & #4

Location	Station	Offset	Theoretical Grade Elevations	Theoretical Grade Elevations Adjusted For Dead Load Deflection
℄ Pier #5	10472.518	-.815	147.701	147.701
℄ E. Brg. Pier #5	10472.950	-.815	147.723	147.723
E2	10473.250	-.815	147.738	147.738
F2	10477.522	-.815	147.952	147.956
G2	10481.794	-.815	148.165	148.173
℄ FB11	10482.094	-.815	148.180	148.189
H2	10482.394	-.815	148.195	148.204
I2	10486.666	-.815	148.409	148.422
J2	10490.938	-.815	148.622	148.639
℄ FB12	10491.238	-.815	148.637	148.654
K2	10491.538	-.815	148.652	148.670
L2	10495.810	-.815	148.866	148.888
M2	10500.082	-.815	149.080	149.106
℄ FB13	10500.382	-.815	149.095	149.121
N2	10500.682	-.815	149.110	149.136
O2	10504.954	-.815	149.323	149.350
P2	10509.226	-.815	149.537	149.565
℄ FB14	10509.526	-.815	149.552	149.580
Q2	10509.826	-.815	149.567	149.595
R2	10514.098	-.815	149.780	149.810
S2	10518.370	-.815	149.994	150.025
℄ FB15	10518.670	-.815	150.009	150.040
T2	10518.970	-.815	150.024	150.055
U2	10523.242	-.815	150.238	150.270
V2	10527.514	-.815	150.451	150.484
℄ FB16	10527.814	-.815	150.466	150.499
W2	10528.114	-.815	150.481	150.514
X2	10532.386	-.815	150.695	150.725
Y2	10536.658	-.815	150.908	150.936
℄ FB17	10536.958	-.815	150.923	150.950
Z2	10537.258	-.815	150.938	150.965
A3	10541.530	-.815	151.152	151.177
B3	10545.802	-.815	151.366	151.388
℄ FB18	10546.102	-.815	151.381	151.403
C3	10546.402	-.815	151.396	151.417
D3	10550.674	-.815	151.609	151.628
E3	10554.946	-.815	151.823	151.839
℄ FB19	10555.246	-.815	151.838	151.854
F3	10555.546	-.815	151.853	151.869
G3	10559.818	-.815	152.066	152.079
H3	10564.090	-.815	152.280	152.291
℄ FB20	10564.390	-.815	152.295	152.306
I3	10564.690	-.815	152.310	152.320
J3	10568.962	-.815	152.524	152.532
K3	10573.234	-.815	152.737	152.743
℄ FB21	10573.534	-.815	152.752	152.757
L3	10573.834	-.815	152.767	152.772
M3	10578.106	-.815	152.981	152.984
N3	10582.378	-.815	153.194	153.194
℄ Pier #6	10582.678	-.815	153.209	153.209
O3	10582.978	-.815	153.224	153.224
P3	10587.250	-.815	153.430	153.432
Q3	10591.522	-.815	153.621	153.625
℄ FB23	10591.822	-.815	153.634	153.638
R3	10592.122	-.815	153.647	153.651
S3	10596.394	-.815	153.822	153.828
T3	10600.666	-.815	153.982	153.990
℄ FB24	10600.966	-.815	153.993	154.002
U3	10601.266	-.815	154.004	154.013
V3	10605.538	-.815	154.148	154.159
W3	10609.810	-.815	154.278	154.291
℄ FB25	10610.110	-.815	154.287	154.300
X3	10610.410	-.815	154.296	154.309
Y3	10614.682	-.815	154.410	154.425
Z3	10618.954	-.815	154.509	154.526
℄ FB26	10619.254	-.815	154.516	154.533
A4	10619.554	-.815	154.522	154.539
B4	10623.826	-.815	154.605	154.624
C4	10628.098	-.815	154.675	154.696
℄ FB27	10628.398	-.815	154.679	154.700
D4	10628.698	-.815	154.683	154.705
E4	10632.970	-.815	154.736	154.760
F4	10637.242	-.815	154.775	154.801
℄ FB28	10637.542	-.815	154.777	154.803
G4	10637.842	-.815	154.779	154.805
H4	10642.114	-.815	154.801	154.829
I4	10646.386	-.815	154.810	154.840
℄ FB29	10646.686	-.815	154.810	154.840

STRINGERS #3 & #4 CONTINUED

Location	Station	Offset	Theoretical Grade Elevations	Theoretical Grade Elevations Adjusted For Dead Load Deflection
J4	10646.986	-.815	154.810	154.840
K4	10651.258	-.815	154.801	154.829
L4	10655.530	-.815	154.779	154.805
℄ FB30	10655.830	-.815	154.777	154.803
M4	10656.130	-.815	154.775	154.801
N4	10660.402	-.815	154.736	154.760
O4	10664.674	-.815	154.683	154.705
℄ FB31	10664.974	-.815	154.679	154.700
P4	10665.274	-.815	154.675	154.696
Q4	10669.546	-.815	154.605	154.624
R4	10673.818	-.815	154.522	154.539
℄ FB32	10674.118	-.815	154.516	154.533
S4	10674.418	-.815	154.509	154.526
T4	10678.690	-.815	154.410	154.425
U4	10682.962	-.815	154.296	154.309
℄ FB33	10683.262	-.815	154.287	154.300
V4	10683.562	-.815	154.278	154.291
W4	10687.834	-.815	154.148	154.159
X4	10692.106	-.815	154.004	154.013
℄ FB34	10692.406	-.815	153.993	154.002
Y4	10692.706	-.815	153.982	153.990
Z4	10696.978	-.815	153.822	153.828
A5	10701.250	-.815	153.647	153.651
℄ FB35	10701.550	-.815	153.634	153.638
B5	10701.850	-.815	153.621	153.625
C5	10706.122	-.815	153.430	153.432
D5	10710.394	-.815	153.224	153.224
℄ Pier #7	10710.694	-.815	153.209	153.209
E5	10710.994	-.815	153.194	153.194
F5	10715.266	-.815	152.981	152.984
G5	10719.538	-.815	152.767	152.772
℄ FB37	10719.838	-.815	152.752	152.757
H5	10720.138	-.815	152.737	152.743
I5	10724.410	-.815	152.524	152.532
J5	10728.682	-.815	152.310	152.320
℄ FB38	10728.982	-.815	152.295	152.306
K5	10729.282	-.815	152.280	152.291
L5	10733.554	-.815	152.066	152.079
M5	10737.826	-.815	151.853	151.869
℄ FB39	10738.126	-.815	151.838	151.854
N5	10738.426	-.815	151.823	151.839
O5	10742.698	-.815	151.609	151.628
P5	10746.970	-.815	151.396	151.417
℄ FB40	10747.270	-.815	151.381	151.403
Q5	10747.570	-.815	151.366	151.388
R5	10751.842	-.815	151.152	151.177
S5	10756.114	-.815	150.938	150.965
℄ FB41	10756.414	-.815	150.923	150.950
T5	10756.714	-.815	150.908	150.936
U5	10760.986	-.815	150.695	150.725
V5	10765.258	-.815	150.481	150.514
℄ FB42	10765.558	-.815	150.466	150.499
W5	10765.858	-.815	150.451	150.484
X5	10770.130	-.815	150.238	150.270
Y5	10774.402	-.815	150.024	150.055
℄ FB43	10774.702	-.815	150.009	150.040
Z5	10775.002	-.815	149.994	150.025
A6	10779.274	-.815	149.780	149.810
B6	10783.546	-.815	149.567	149.595
℄ FB44	10783.846	-.815	149.552	149.580
C6	10784.146	-.815	149.537	149.565
D6	10788.418	-.815	149.323	149.350
E6	10792.690	-.815	149.110	149.136
℄ FB45	10792.990	-.815	149.095	149.121
F6	10793.290	-.815	149.080	149.106
G6	10797.562	-.815	148.866	148.888
H6	10801.834	-.815	148.652	148.670
℄ FB46	10802.134	-.815	148.637	148.654
I6	10802.434	-.815	148.622	148.639
J6	10806.706	-.815	148.409	148.422
K6	10810.978	-.815	148.195	148.204
℄ FB47	10811.278	-.815	148.180	148.189
L6	10811.578	-.815	148.165	148.173
M6	10815.850	-.815	147.952	147.956
N6	10820.122	-.815	147.738	147.738
℄ Brg. E. Abut.	10820.422	-.815	147.723	147.723
Br. E. Abut.	10821.107	-.815	147.689	147.689

℄ ROADWAY

Location	Station	Offset	Theoretical Grade Elevations	Theoretical Grade Elevations Adjusted For Dead Load Deflection
℄ Pier #5	10472.518	.000	147.714	147.714
℄ E. Brg. Pier #5	10472.950	.000	147.735	147.735
E2	10473.250	.000	147.750	147.750
F2	10477.522	.000	147.964	147.968
G2	10481.794	.000	148.177	148.185
℄ FB11	10482.094	.000	148.192	148.201
H2	10482.394	.000	148.207	148.216
I2	10486.666	.000	148.421	148.434
J2	10490.938	.000	148.635	148.652
℄ FB12	10491.238	.000	148.650	148.667
K2	10491.538	.000	148.665	148.683
L2	10495.810	.000	148.878	148.900
M2	10500.082	.000	149.092	149.118
℄ FB13	10500.382	.000	149.107	149.133
N2	10500.682	.000	149.122	149.148
O2	10504.954	.000	149.335	149.362
P2	10509.226	.000	149.549	149.577
℄ FB14	10509.526	.000	149.564	149.592
Q2	10509.826	.000	149.579	149.607
R2	10514.098	.000	149.793	149.823
S2	10518.370	.000	150.006	150.037
℄ FB15	10518.670	.000	150.021	150.052
T2	10518.970	.000	150.036	150.067
U2	10523.242	.000	150.250	150.282
V2	10527.514	.000	150.463	150.496
℄ FB16	10527.814	.000	150.478	150.511
W2	10528.114	.000	150.493	150.526
X2	10532.386	.000	150.707	150.737
Y2	10536.658	.000	150.921	150.949
℄ FB17	10536.958	.000	150.936	150.963
Z2	10537.258	.000	150.951	150.978
A3	10541.530	.000	151.164	151.189
B3	10545.802	.000	151.378	151.400
℄ FB18	10546.102	.000	151.393	151.415
C3	10546.402	.000	151.408	151.429
D3	10550.674	.000	151.621	151.640
E3	10554.946	.000	151.835	151.851
℄ FB19	10555.246	.000	151.850	151.866
F3	10555.546	.000	151.865	151.881
G3	10559.818	.000	152.079	152.092
H3	10564.090	.000	152.292	152.303
℄ FB20	10564.390	.000	152.307	152.318
I3	10564.690	.000	152.322	152.332
J3	10568.962	.000	152.536	152.544
K3	10573.234	.000	152.749	152.755
℄ FB21	10573.534	.000	152.764	152.769
L3	10573.834	.000	152.779	152.784
M3	10578.106	.000	152.993	152.996
N3	10582.378	.000	153.207	153.207
℄ Pier #6	10582.678	.000	153.222	153.222
O3	10582.978	.000	153.237	153.237
P3	10587.250	.000	153.442	153.444
Q3	10591.522	.000	153.633	153.637
℄ FB23	10591.822	.000	153.646	153.650
R3	10592.122	.000	153.659	153.663
S3	10596.394	.000	153.834	153.840
T3	10600.666	.000	153.995	154.003
℄ FB24	10600.966	.000	154.005	154.014
U3	10601.266	.000	154.016	154.025
V3	10605.538	.000	154.161	154.172
W3	10609.810	.000	154.291	154.304
℄ FB25	10610.110	.000	154.299	154.312
X3	10610.410	.000	154.308	154.321
Y3	10614.682	.000	154.422	154.437
Z3	10618.954	.000	154.521	154.538
℄ FB26	10619.254	.000	154.528	154.545
A4	10619.554	.000	154.534	154.551
B4	10623.826	.000	154.618	154.637
C4	10628.098	.000	154.687	154.708
℄ FB27	10628.398	.000	154.691	154.712
D4	10628.698	.000	154.695	154.717
E4	10632.970	.000	154.748	154.772
F4	10637.242	.000	154.787	154.813
℄ FB28	10637.542	.000	154.789	154.815
G4	10637.842	.000	154.791	154.817
H4	10642.114	.000	154.814	154.842
I4	10646.386	.000	154.822	154.852
℄ FB29	10646.686	.000	154.822	154.852

℄ ROADWAY

Location	Station	Offset	Theoretical Grade Elevations	Theoretical Grade Elevations Adjusted For Dead Load Deflection
J4	10646.986	.000	154.822	154.852
K4	10651.258	.000	154.814	154.842
L4	10655.530	.000	154.791	154.817
℄ FB30	10655.830	.000	154.789	154.815
M4	10656.130	.000	154.787	154.813
N4	10660.402	.000	154.748	154.772
O4	10664.674	.000	154.695	154.717
℄ FB31	10664.974	.000	154.691	154.712
P4	10665.274	.000	154.687	154.708
Q4	10669.546	.000	154.618	154.637
R4	10673.818	.000	154.534	154.551
℄ FB32	10674.118	.000	154.528	154.545
S4	10674.418	.000	154.521	154.538
T4	10678.690	.000	154.422	154.437
U4	10682.962	.000	154.308	154.321
℄ FB33	10683.262	.000	154.299	154.312
V4	10683.562	.000	154.291	154.304
W4	10687.834	.000	154.160	154.171
X4	10692.106	.000	154.016	154.025
℄ FB34	10692.406	.000	154.005	154.014
Y4	10692.706	.000	153.995	154.003
Z4	10696.978	.000	153.834	153.840
A5	10701.250	.000	153.659	153.663
℄ FB35	10701.550	.000	153.646	153.650
B5	10701.850	.000	153.633	153.637
C5	10706.122	.000	153.442	153.444
D5	10710.394	.000	153.237	153.237
℄ Pier #7	10710.694	.000	153.222	153.222
E5	10710.994	.000	153.207	153.207
F5	10715.266	.000	152.993	152.996
G5	10719.538	.000	152.779	152.784
℄ FB37	10719.838	.000	152.764	152.769
H5	10720.138	.000	152.749	152.755
I5	10724.410	.000	152.536	152.544
J5	10728.682	.000	152.322	152.332
℄ FB38	10728.982	.000	152.307	152.318
K5	10729.282	.000	152.292	152.303
L5	10733.554	.000	152.079	152.092
M5	10737.826	.000	151.865	151.881
℄ FB39	10738.126	.000	151.850	151.866
N5	10738.426	.000	151.835	151.851
O5	10742.698	.000	151.621	151.640
P5	10746.970	.000	151.408	151.429
℄ FB40	10747.270	.000	151.393	151.415
Q5	10747.570	.000	151.378	151.400
R5	10751.842	.000	151.164	151.189
S5	10756.114	.000	150.951	150.978
℄ FB41	10756.414	.000	150.936	150.963
T5	10756.714	.000	150.921	150.949
U5	10760.986	.000	150.707	150.737
V5	10765.258	.000	150.493	150.526
℄ FB42	10765.558	.000	150.478	150.511
W5	10765.858	.000	150.463	150.496
X5	10770.130	.000	150.250	150.282
Y5	10774.402	.000	150.036	150.067
℄ FB43	10774.702	.000	150.021	150.052
Z5	10775.002	.000	150.006	150.037
A6	10779.274	.000	149.793	149.823
B6	10783.546	.000	149.579	149.607
℄ FB44	10783.846	.000	149.564	149.592
C6	10784.146	.000	149.549	149.577
D6	10788.418	.000	149.335	149.362
E6	10792.690	.000	149.122	149.148
℄ FB45	10792.990	.000	149.107	149.133
F6	10793.290	.000	149.092	149.118
G6	10797.562	.000	148.878	148.900
H6	10801.834	.000	148.665	148.683
℄ FB46	10802.134	.000	148.650	148.667
I6	10802.434	.000	148.635	148.652
J6	10806.706	.000	148.421	148.434
K6	10810.978	.000	148.207	148.216
℄ FB47	10811.278	.000	148.192	148.201
L6	10811.578	.000	148.177	148.185
M6	10815.850	.000	147.964	147.968
N6	10820.122	.000	147.750	147.750
℄ Brg. E. Abut.	10820.422	.000	147.735	147.735
Br. E. Abut.	10821.107	.000	147.701	147.701

Note: For Elevations Location Plan see sheets #10 and #11 of 123.

DESIGNED	L S H
CHECKED	T T B JLC
DRAWN	R. Daty
CHECKED	T T B L S H

June 26, 1997

ENGINEER OF BRIDGE AND STRUCTURE

TOP OF SLAB ELEVATIONS
TRUSS SPANS #6 THRU #8
F.A.P. RT. 315 SECTION 140B-I-4
FULTON AND MASON COUNTIES
STATION 10+646.69

F.A.P. 315	140B-I 4	FULTON & MASON		29

SHEET NO. 9
123 SHEETS

STATE OF ILLINOIS
DEPARTMENT OF TRANSPORTATION

PROFILE GRADE LINE

Location	Station	Offset	Theoretical Grade Elevations	Theoretical Grade Elevations Adjusted For Dead Load Deflection
℄ Pier #5	10472.518	.685	147.703	147.703
℄ E. Brg. Pier #5	10472.950	.685	147.725	147.725
F2	10473.250	.685	147.740	147.740
F2	10477.522	.685	147.954	147.958
G2	10481.794	.685	148.167	148.175
℄ FB11	10482.094	.685	148.182	148.191
H2	10482.394	.685	148.197	148.206
I2	10486.666	.685	148.411	148.424
J2	10490.938	.685	148.624	148.641
℄ FB12	10491.238	.685	148.639	148.656
K2	10491.538	.685	148.654	148.672
L2	10495.810	.685	148.868	148.890
M2	10500.082	.685	149.082	149.108
℄ FB13	10500.382	.685	149.097	149.123
N2	10500.682	.685	149.112	149.138
O2	10504.954	.685	149.325	149.352
P2	10509.226	.685	149.539	149.567
℄ FB14	10509.526	.685	149.554	149.582
Q2	10509.826	.685	149.569	149.597
R2	10514.098	.685	149.782	149.812
S2	10518.370	.685	149.996	150.027
℄ FB15	10518.670	.685	150.011	150.042
T2	10518.970	.685	150.026	150.057
U2	10523.242	.685	150.240	150.272
V2	10527.514	.685	150.453	150.486
℄ FB16	10527.814	.685	150.468	150.501
W2	10528.114	.685	150.483	150.516
X2	10532.386	.685	150.697	150.727
Y2	10536.658	.685	150.910	150.938
℄ FB17	10536.958	.685	150.925	150.952
Z2	10537.258	.685	150.940	150.967
A3	10541.530	.685	151.154	151.179
B3	10545.802	.685	151.368	151.390
℄ FB18	10546.102	.685	151.383	151.405
C3	10546.402	.685	151.398	151.419
D3	10550.674	.685	151.611	151.630
E3	10554.946	.685	151.825	151.841
℄ FB19	10555.246	.685	151.840	151.856
F3	10555.546	.685	151.855	151.871
G3	10559.818	.685	152.068	152.081
H3	10564.090	.685	152.282	152.293
℄ FB20	10564.390	.685	152.297	152.308
I3	10564.690	.685	152.312	152.322
J3	10568.962	.685	152.526	152.534
K3	10573.234	.685	152.739	152.745
℄ FB21	10573.534	.685	152.754	152.759
L3	10573.834	.685	152.769	152.774
M3	10578.106	.685	152.983	152.986
N3	10582.378	.685	153.196	153.196
℄ Pier #6	10582.678	.685	153.211	153.211
O3	10582.978	.685	153.226	153.226
P3	10587.250	.685	153.432	153.434
Q3	10591.522	.685	153.623	153.627
℄ FB23	10591.822	.685	153.636	153.640
R3	10592.122	.685	153.649	153.653
S3	10596.394	.685	153.824	153.830
T3	10600.666	.685	153.984	153.992
℄ FB24	10600.966	.685	153.995	154.004
U3	10601.266	.685	154.006	154.015
V3	10605.538	.685	154.150	154.161
W3	10609.810	.685	154.280	154.293
℄ FB25	10610.110	.685	154.289	154.302
X3	10610.410	.685	154.298	154.311
Y3	10614.682	.685	154.412	154.427
Z3	10618.954	.685	154.511	154.528
℄ FB26	10619.254	.685	154.518	154.535
A4	10619.554	.685	154.524	154.541
B4	10623.826	.685	154.607	154.626
C4	10628.098	.685	154.677	154.698
℄ FB27	10628.398	.685	154.681	154.702
D4	10628.698	.685	154.685	154.707
E4	10632.970	.685	154.738	154.762
F4	10637.242	.685	154.777	154.803
℄ FB28	10637.542	.685	154.779	154.805
G4	10637.842	.685	154.781	154.807
H4	10642.114	.685	154.803	154.831
I4	10646.386	.685	154.811	154.841
℄ FB29	10646.686	.685	154.812	154.842

PROFILE GRADE LINE

Location	Station	Offset	Theoretical Grade Elevations	Theoretical Grade Elevations Adjusted For Dead Load Deflection
J4	10646.986	.685	154.811	154.841
K4	10651.258	.685	154.803	154.831
L4	10655.530	.685	154.781	154.807
℄ FB30	10655.830	.685	154.779	154.805
M4	10656.130	.685	154.777	154.803
N4	10660.402	.685	154.738	154.762
O4	10664.674	.685	154.685	154.707
℄ FB31	10664.974	.685	154.681	154.702
P4	10665.274	.685	154.677	154.698
Q4	10669.546	.685	154.607	154.626
R4	10673.818	.685	154.524	154.541
℄ FB32	10674.118	.685	154.518	154.535
S4	10674.418	.685	154.511	154.528
T4	10678.690	.685	154.411	154.426
U4	10682.962	.685	154.298	154.311
℄ FB33	10683.262	.685	154.289	154.302
V4	10683.562	.685	154.280	154.293
W4	10687.834	.685	154.150	154.161
X4	10692.106	.685	154.006	154.015
℄ FB34	10692.406	.685	153.995	154.004
Y4	10692.706	.685	153.984	153.992
Z4	10696.978	.685	153.824	153.830
A5	10701.250	.685	153.649	153.653
℄ FB35	10701.550	.685	153.636	153.640
B5	10701.850	.685	153.623	153.627
C5	10706.122	.685	153.432	153.434
D5	10710.394	.685	153.226	153.226
℄ Pier #7	10710.694	.685	153.211	153.211
E5	10710.994	.685	153.196	153.196
F5	10715.266	.685	152.983	152.986
G5	10719.538	.685	152.769	152.774
℄ FB37	10719.838	.685	152.754	152.759
H5	10720.138	.685	152.739	152.745
I5	10724.410	.685	152.525	152.533
J5	10728.682	.685	152.312	152.322
℄ FB38	10728.982	.685	152.297	152.308
K5	10729.282	.685	152.282	152.293
L5	10733.554	.685	152.068	152.081
M5	10737.826	.685	151.855	151.871
℄ FB39	10738.126	.685	151.840	151.856
N5	10738.426	.685	151.825	151.841
O5	10742.698	.685	151.611	151.630
P5	10746.970	.685	151.397	151.418
℄ FB40	10747.270	.685	151.382	151.404
Q5	10747.570	.685	151.367	151.389
R5	10751.842	.685	151.154	151.179
S5	10756.114	.685	150.940	151.967
℄ FB41	10756.414	.685	150.925	151.952
T5	10756.714	.685	150.910	150.938
U5	10760.986	.685	150.697	150.727
V5	10765.258	.685	150.483	150.516
℄ FB42	10765.558	.685	150.468	150.501
W5	10765.858	.685	150.453	150.486
X5	10770.130	.685	150.239	150.271
Y5	10774.402	.685	150.026	150.057
℄ FB43	10774.702	.685	150.011	150.042
Z5	10775.002	.685	149.996	150.027
A6	10779.274	.685	149.782	149.812
B6	10783.546	.685	149.569	149.597
℄ FB44	10783.846	.685	149.554	149.582
C6	10784.146	.685	149.539	149.567
D6	10788.418	.685	149.325	149.352
E6	10792.690	.685	149.111	149.137
℄ FB45	10792.990	.685	149.096	149.122
F6	10793.290	.685	149.081	149.107
G6	10797.562	.685	148.868	148.890
H6	10801.834	.685	148.654	148.672
℄ FB46	10802.134	.685	148.639	148.656
I6	10802.434	.685	148.624	148.641
J6	10806.706	.685	148.411	148.424
K6	10810.978	.685	148.197	148.206
℄ FB47	10811.278	.685	148.182	148.191
L6	10811.578	.685	148.167	148.175
M6	10815.850	.685	147.953	147.957
N6	10820.122	.685	147.740	147.740
℄ Brg. E. Abut.	10820.422	.685	147.725	147.725
Bk. E. Abut.	10821.107	.685	147.691	147.691

Note: For Elevations Location Plan see sheets #10 and #11 of 123.

DESIGNED	LSH
CHECKED	JLC
DRAWN	R. Doty
CHECKED	LSH

June 26, 1997

ENGINEER OF BRIDGE DESIGN

ENGINEER OF BRIDGES AND STRUCTURES

TOP OF SLAB ELEVATIONS
TRUSS SPANS #6 THRU #8
F.A.P. RT. 315 SECTION 140B-I-4
FULTON AND MASON COUNTIES
STATION 10+646.69

STATE OF ILLINOIS
DEPARTMENT OF TRANSPORTATION

ROUTE NO.	SECTION	COUNTY	TOTAL SHEETS	SHEET NO.
F.A.P. 315	140B-1-4	FULTON & MASON		30

SHEET NO. 10
123 SHEETS

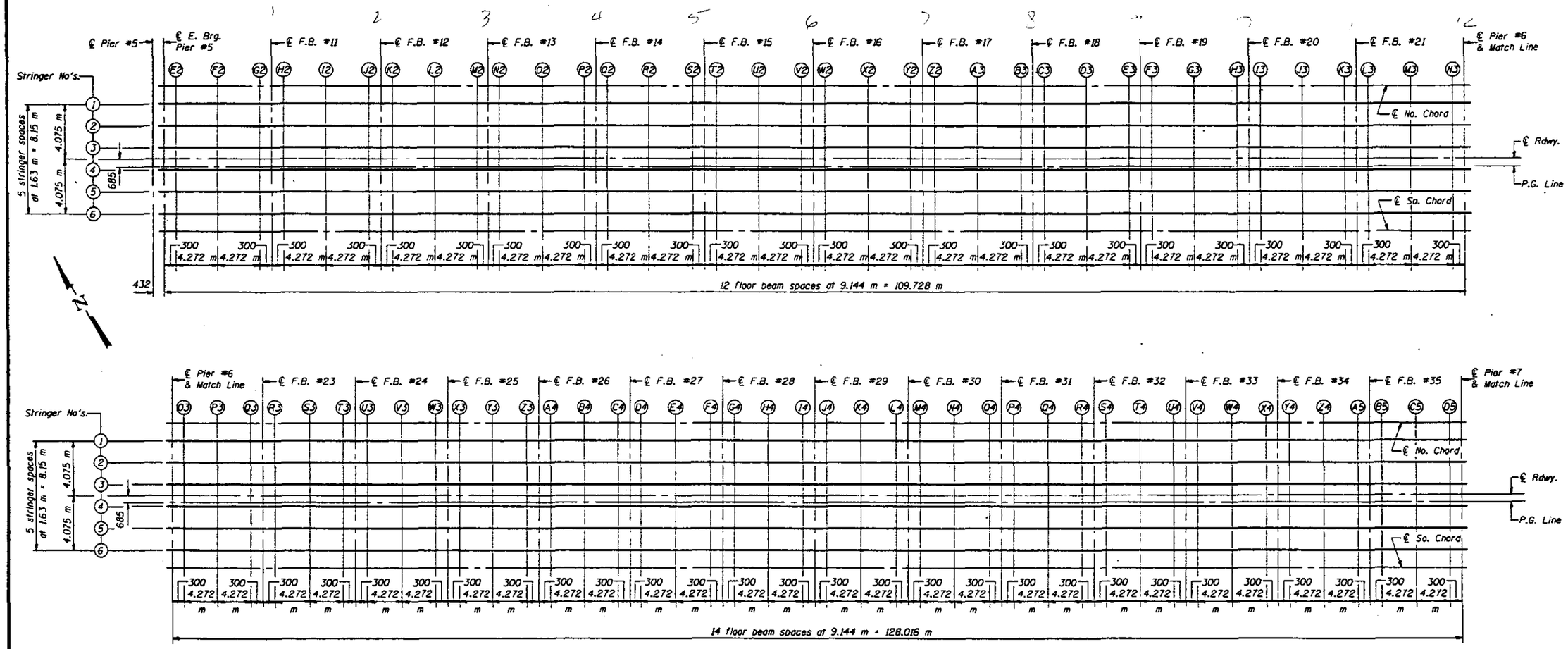

ELEVATIONS LOCATION PLAN

DESIGNED	LSH
CHECKED	TTB JLC
DRAWN	R. Daly
CHECKED	TTB LSH

June 26, 1997

DIRECTOR OF HIGHWAY DESIGN

ENGINEER OF BRIDGES AND STRUCTURES

TOP OF SLAB ELEVATIONS
TRUSS SPANS #6 AND #7
F.A.P. RT. 315 SECTION 140B-I-4
FULTON AND MASON COUNTIES
STATION 10+646.69

STATE OF ILLINOIS
DEPARTMENT OF TRANSPORTATION

ROUTE NO.	SECTION	COUNTY	TOTAL SHEETS	SHEET NO.
F.A.P. 315	140B-I-4	FULTON & MASON		
FED. ROAD DIST. NO. 7	ILLINOIS	FED. AID PROJECT-		

SHEET NO. 11
123 SHEETS

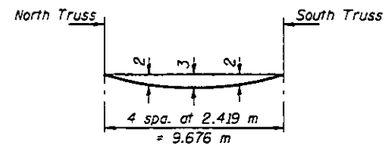

DEAD LOAD DEFLECTION DIAGRAM (FLOOR BEAM ONLY)

(Includes weight of concrete only)

Deflections for floor beams are shown above. These deflections are not included in the "Theoretical Grade Elevations Adjusted For Dead Load Deflection" listed in the Table of Deck Elevations.

Deflections for stringers are small enough to be neglected.

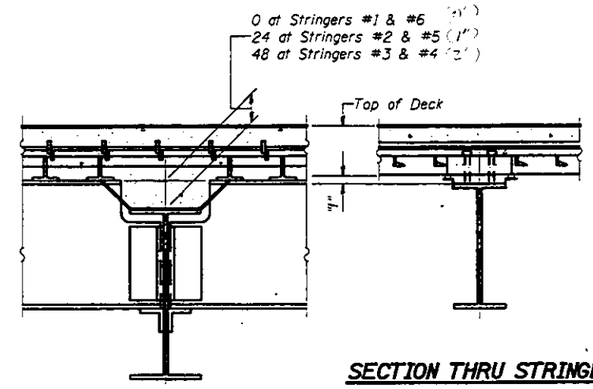

SECTION THRU STRINGER

SECTION THRU FLOOR BEAM

To determine "t": After all structural steel has been erected, elevations of the top flanges of the stringers shall be taken at intervals shown below.
These elevations subtracted from the "Theoretical Grade Elevations Adjusted for Dead Load Deflection" minus slab thickness, equals the fillet heights "t" above top flange of stringer.

FILLET HEIGHTS

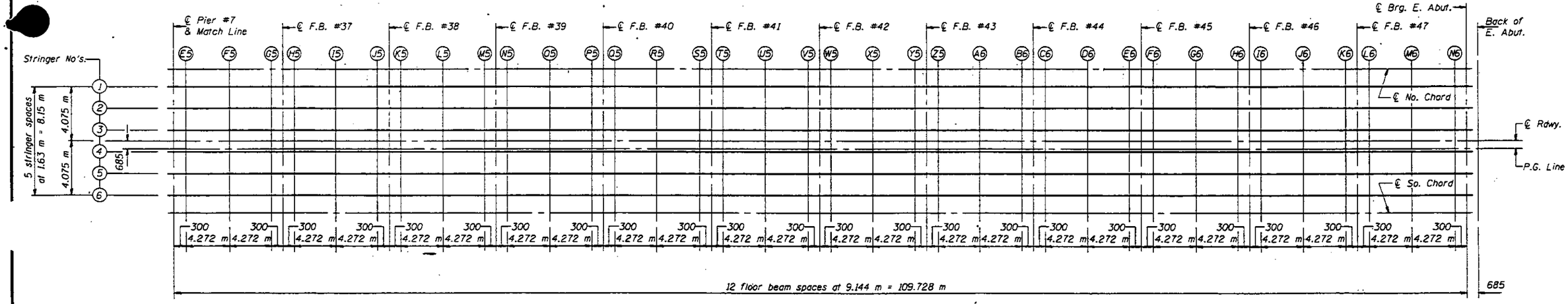

ELEVATIONS LOCATION PLAN

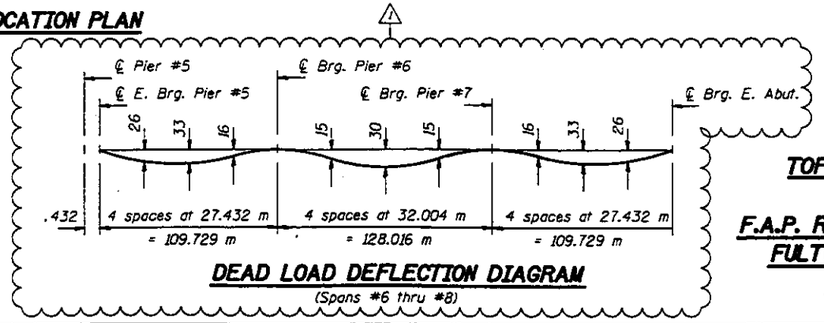

DEAD LOAD DEFLECTION DIAGRAM

(Spans #6 thru #8)

TOP OF SLAB ELEVATIONS
TRUSS SPAN #8
F.A.P. RT. 315 SECTION 140B-I-4
FULTON AND MASON COUNTIES
STATION 10+646.69

DESIGNED	LSH
CHECKED	TTBB JLC
DRAWN	R. Doty
CHECKED	TTBB LSH

June 26, 1997

EXAMINED Jorge D. Kespar — ENGINEER OF BRIDGE DESIGN

PASSED Ralph E. Anderson — ENGINEER OF BRIDGES AND STRUCTURES

△1 Revised 7-16-97 STD

STATE OF ILLINOIS
DEPARTMENT OF TRANSPORTATION

ROUTE NO.	SECTION	COUNTY	TOTAL SHEETS	SHEET NO.
F.A.P. 315	140B-I-4	FULTON & MASON		
FED. ROAD DIST. NO. 7		ILLINOIS	FED. AID PROJECT-	

SHEET NO. 12
123 SHEETS

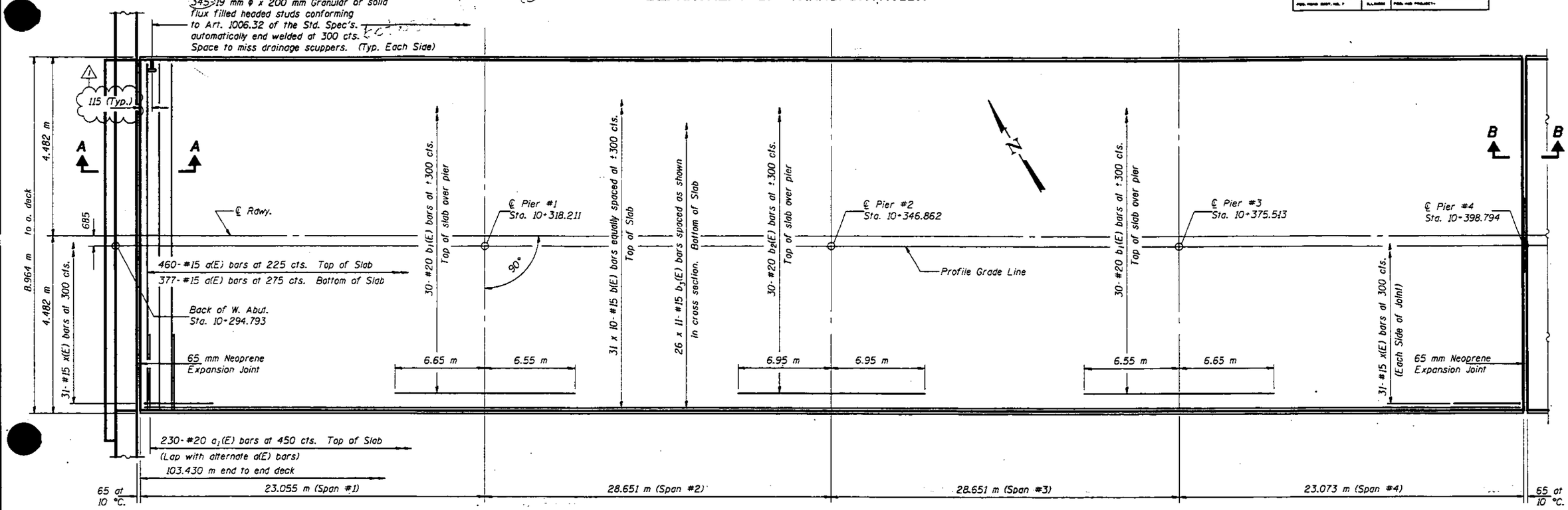

PLAN

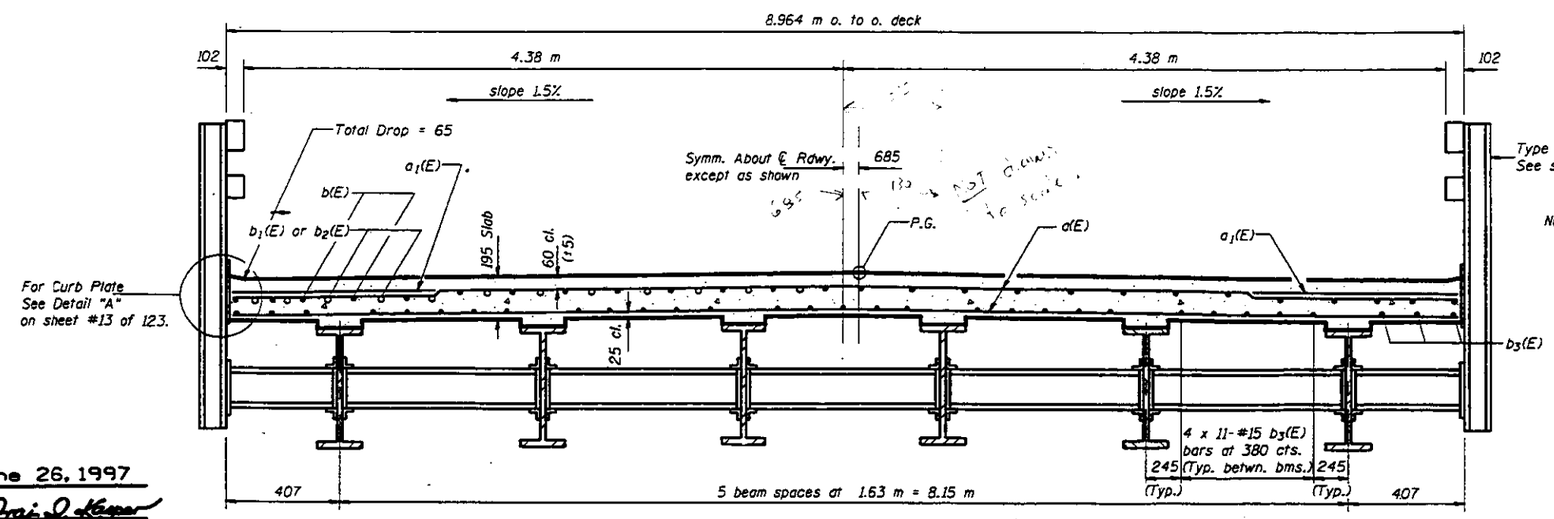

CROSS SECTION - SPANS 1 THRU 4
(Looking East)

MIN. BAR LAPS
#15 bars = 510

Notes: See sheet #13 of 123 for superstructure details, Section A-A, Section B-B and Bill of Material.
Reinforcement bars designated (E) shall be epoxy coated.
Bars indicated thus 20 x 3-#15 etc. indicates 20 lines of bars with 3 lengths per line.
Cut reinforcement bars to miss drainage scuppers.
For spacing of drainage scuppers see sheet #1 of 123.

SIGNED	JLC
CHECKED	TTBB
DRAWN	R. Doty
CHECKED	JLC TTBB

June 26, 1997
EXAMINED — ENGINEER OF GENERAL DESIGN
PASSED — ENGINEER OF BRIDGES AND STRUCTURES

SUPERSTRUCTURE
SPANS #1 THRU #4
F.A.P. RT. 315 SECTION 140B-I-4
FULTON AND MASON COUNTIES
STATION 10+646.69

Revised 7-16-97 STD

projects\rad00012\0630002.dgn Jul. 21, 1997 15:29:53

STATE OF ILLINOIS
DEPARTMENT OF TRANSPORTATION

F.A.P. 315	140B-I-4	FULTON & MASON		33

SHEET NO. 13
123 SHEETS

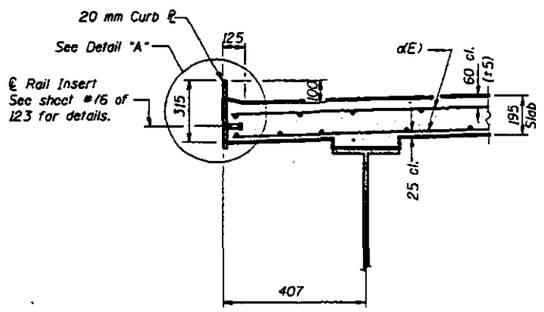

SECTION THRU CURB PLATE
(Appr. Spans)

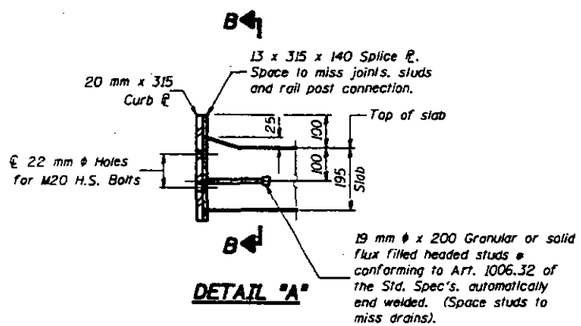

DETAIL "A"

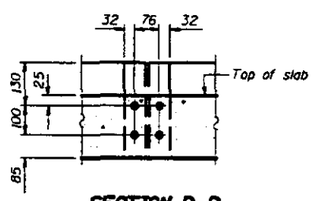

SECTION B-B

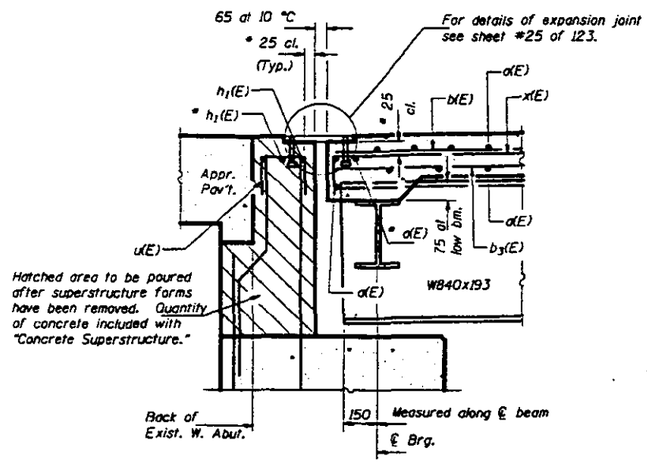

SECTION A-A
(Applies to D Diaphragms only)

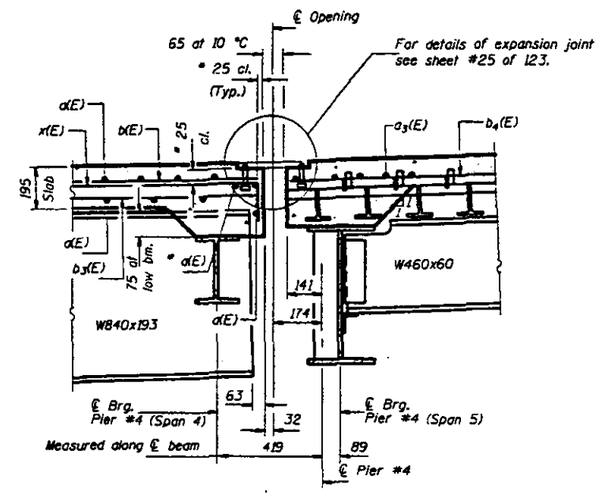

SECTION B-B
(Applies to D Diaphragms only in Span 4)

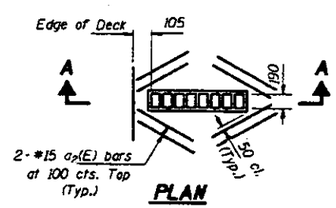

PLAN

* Place a(E) and h1(E) bars in in back of anchor bolt as shown if required to maintain 25 mm cl. (+0-3 mm). Anchor bolts should be tied to these bars.

Notes: Curb Plates including curb splice plates and attached studs shall be included in the cost of "Furnishing & Erecting Structural Steel."
All surfaces of the curb plates and curb splice plates shall be galvanized in accordance with AASHTO M111 and ASTM A123. Shear studs shall be welded to curb plate before galvanizing. Curb plates shall not be painted.
Reinforcement bars designated (E) shall be epoxy coated.

APPROACH SPANS
BILL OF MATERIAL

Bar	No.	Size	Length (m)	Shape
a(E)	839	#15	8.88	
a1(E)	462	#20	1.20	
a2(E)	64	#15	0.61	
b(E)	310	#15	10.82	
b1(E)	60	#20	13.20	
b2(E)	30	#20	13.90	
b3(E)	286	#15	9.88	
x(E)	62	#15	1.28	
Reinforcement Bars, Epoxy Coated			kg	25740
Concrete Superstructure			m³	186.1

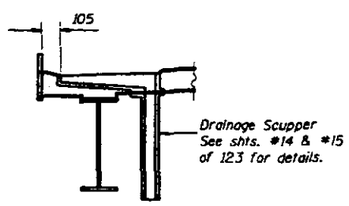

SECTION A-A

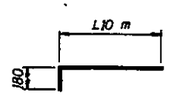

BAR x(E)

DESIGNED	JLC
CHECKED	TTBB
DRAWN	R. Doty
CHECKED	JLC TTBB

June 26, 1997

SUPERSTRUCTURE DETAILS
SPANS #1 THRU #4
F.A.P. RT. 315 SECTION 140B-I-4
FULTON AND MASON COUNTIES
STATION 10+646.69

STATE OF ILLINOIS
DEPARTMENT OF TRANSPORTATION

F.A.P. 315	140B-I-4	FULTON & MASON		34

SHEET NO. 14
123 SHEETS

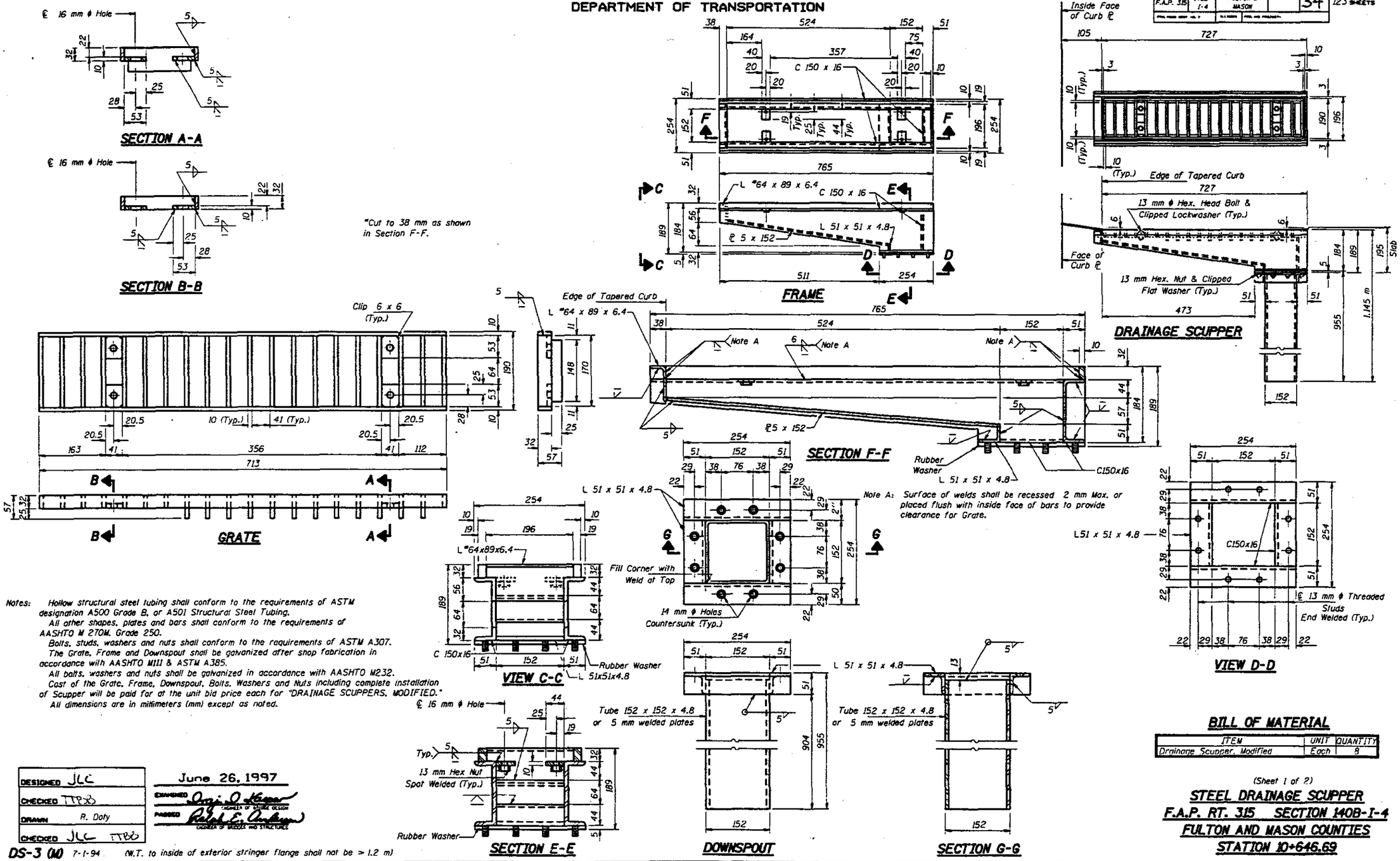

Notes: Hollow structural steel tubing shall conform to the requirements of ASTM designation A500 Grade B, or A501 Structural Steel Tubing.

All other shapes, plates and bars shall conform to the requirements of AASHTO M 270M, Grade 250.

Bolts, studs, washers and nuts shall conform to the requirements of ASTM A307.

The Grate, Frame and Downspout shall be galvanized after shop fabrication in accordance with AASHTO M111 & ASTM A385.

All bolts, washers and nuts shall be galvanized in accordance with AASHTO M232.

Cost of the Grate, Frame, Downspout, Bolts, Washers and Nuts including complete installation of Scupper will be paid for at the unit bid price each for "DRAINAGE SCUPPERS, MODIFIED."

All dimensions are in millimeters (mm) except as noted.

BILL OF MATERIAL

ITEM	UNIT	QUANTITY
Drainage Scupper, Modified	Each	8

DESIGNED	JLC
CHECKED	TTBB
DRAWN	R. Doty
CHECKED	JLC TTBB

June 26, 1997

EXAMINED Engineer of Bridge Design
PASSED Engineer of Bridges and Structures

DS-3 (M) 7-1-94 (W.T. to inside of exterior stringer flange shall not be > 1.2 m)

(Sheet 1 of 2)

STEEL DRAINAGE SCUPPER
F.A.P. RT. 315 SECTION 140B-I-4
FULTON AND MASON COUNTIES
STATION 10+646.69

STATE OF ILLINOIS
DEPARTMENT OF TRANSPORTATION

F.A.P. 315	140B-I-4	FULTON & MASON		35

SHEET NO. 15
123 SHEETS

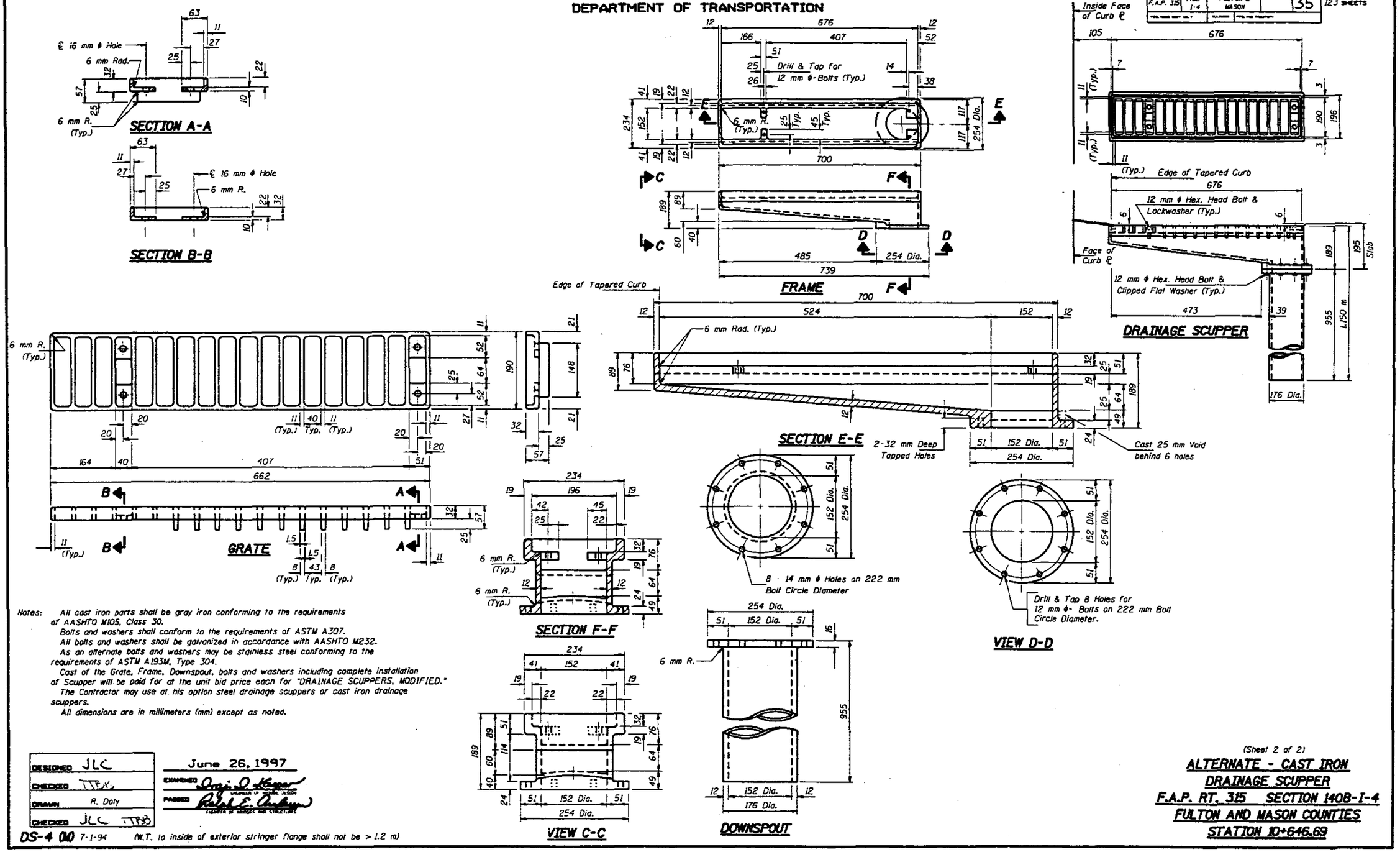

Notes: All cast iron parts shall be gray iron conforming to the requirements of AASHTO M105, Class 30.
Bolts and washers shall conform to the requirements of ASTM A307.
All bolts and washers shall be galvanized in accordance with AASHTO M232.
As an alternate bolts and washers may be stainless steel conforming to the requirements of ASTM A193M, Type 304.
Cost of the Grate, Frame, Downspout, bolts and washers including complete installation of Scupper will be paid for at the unit bid price each for "DRAINAGE SCUPPERS, MODIFIED."
The Contractor may use at his option steel drainage scuppers or cast iron drainage scuppers.
All dimensions are in millimeters (mm) except as noted.

DESIGNED	JLC
CHECKED	TTPB
DRAWN	R. Doty
CHECKED	JLC TTPB

June 26, 1997
ENGINEER OF BRIDGE AND STRUCTURE
ENGINEER OF BRIDGE AND STRUCTURE

DS-4 (M) 7-1-94 (N.T. to inside of exterior stringer flange shall not be > 1.2 m)

(Sheet 2 of 2)

ALTERNATE - CAST IRON DRAINAGE SCUPPER
F.A.P. RT. 315 SECTION 140B-I-4
FULTON AND MASON COUNTIES
STATION 10+646.69

STATE OF ILLINOIS
DEPARTMENT OF TRANSPORTATION

ROUTE NO.	SECTION	COUNTY	TOTAL SHEETS	SHEET NO.
F.A.P. 315	140B-I-4	FULTON & MASON	36	123 SHEETS
FED. ROAD DIST. NO. 7	ILLINOIS	FED. AID PROJECT-		

SHEET NO. 16

MIN. BAR LAPS
#10 bars = 360

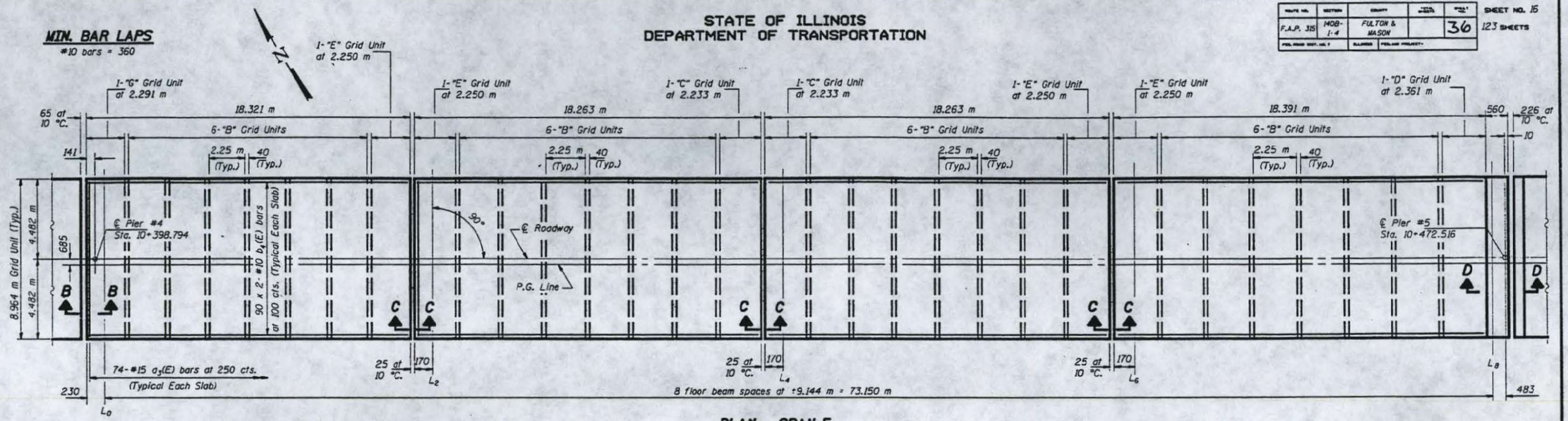

PLAN - SPAN 5

MIN. BAR LAPS
#10 bars = 360

Notes: For Sections C-C, D-D and Bill of Material see sheet #22 of 123.
See sheet #24 of 123 for Drainage Scuppers, Special Details. For location see sheet #1 of 123.
For Section B-B see sheet #13 of 123.
Bars indicated thus 90 x 2-#15 etc. indicates 90 lines of bars with 2 lengths per line.
For Grid Units see sheet #21 of 123.
Reinforcement bars designated (E) shall be epoxy coated.

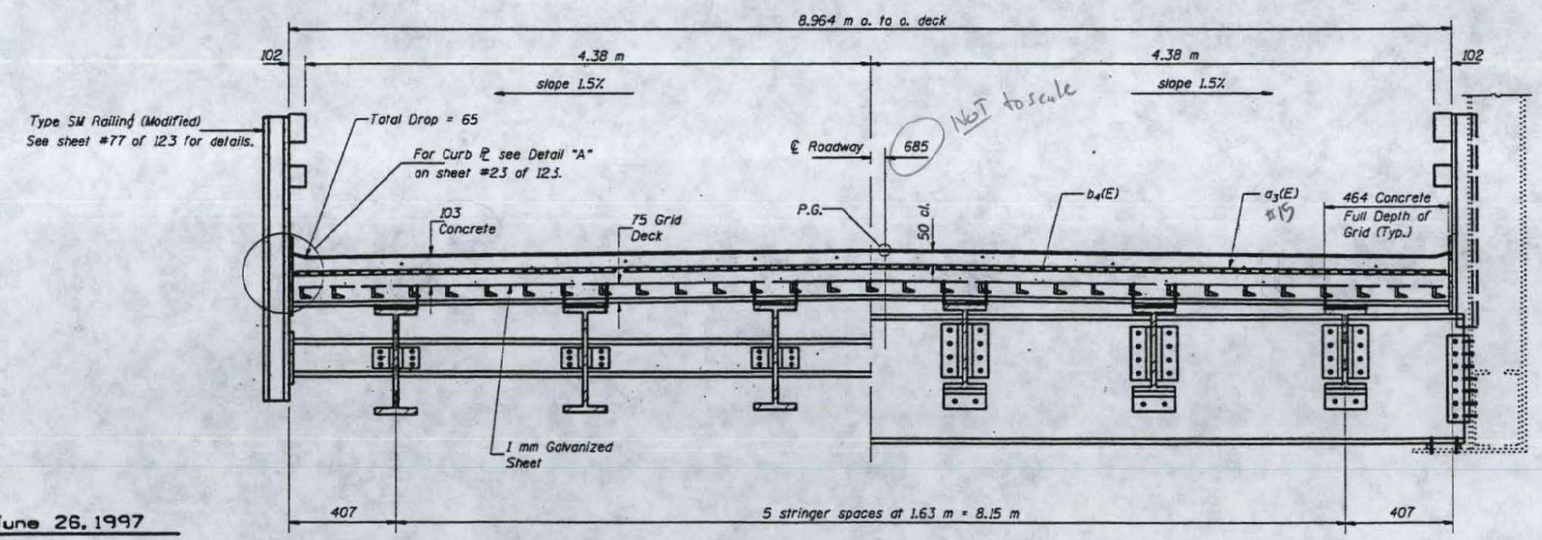

NEAR MIDPOINT OF PANEL

NEAR FLOOR BEAM

CROSS SECTION - SPANS 5 THRU 8
(Looking East)

DESIGNED	LSH
CHECKED	TTPB JLC
DRAWN	R. Doty
CHECKED	LSH TTBB

June 26, 1997
EXAMINED Engineer of Bridge Design
PASSED Engineer of Bridges and Structures

SUPERSTRUCTURE
SPAN 5
F.A.P. RT. 315 SECTION 140B-I-4
FULTON AND MASON COUNTIES
STATION 10+646.69

F.A.P. 315	140B-I-4	FULTON & MASON		37

SHEET NO. 17
123 SHEETS

STATE OF ILLINOIS
DEPARTMENT OF TRANSPORTATION

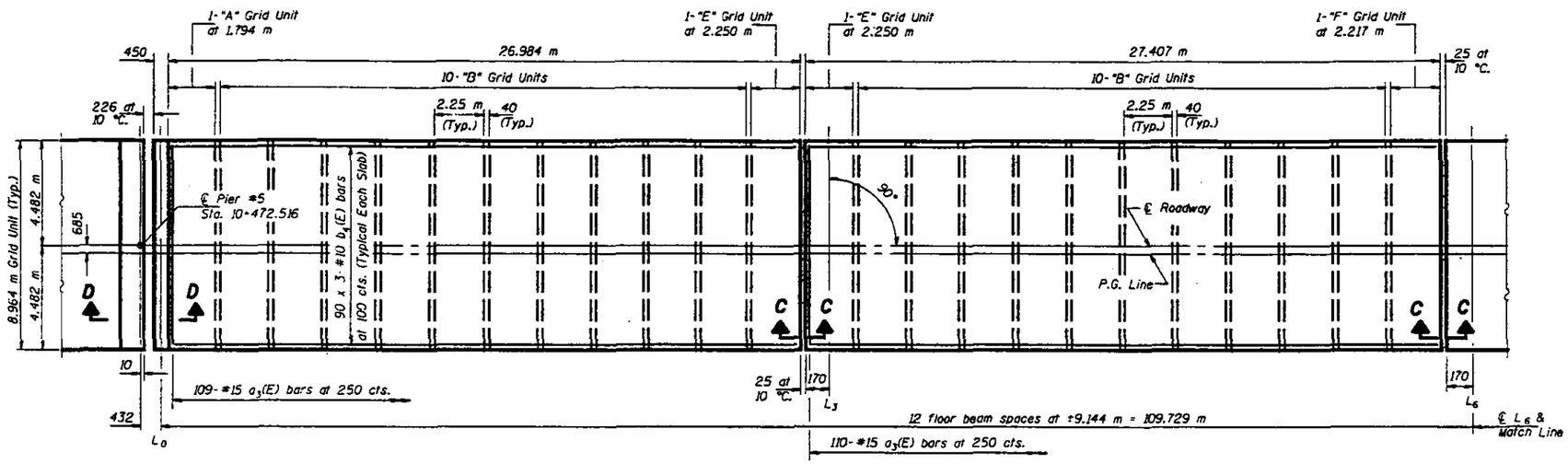

N

MIN. BAR LAPS
#10 bars = 360

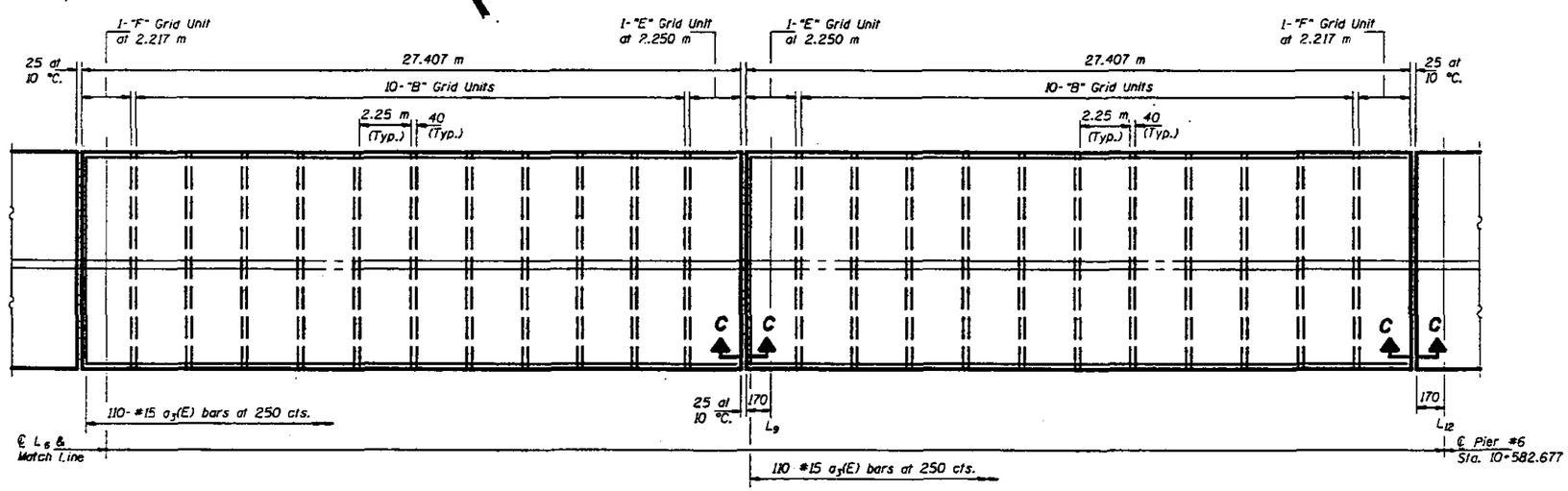

PLAN - SPAN 6

DESIGNED	LSH
CHECKED	TTBB JLC
DRAWN	R. Doty
CHECKED	LSH TTBB

June 26, 1997

DRAWING Engineer of Highway Design
PASSED Engineer of Bridges and Structures

Notes: For Cross Section see sheet #16 of 123.
For Section C-C, Section D-D and Bill of Material see sheet #22 of 123.
See sheet #24 of 123 for Drainage Scuppers, Special Details. For location see sheet #1 of 123.
Bars indicated thus 90 x 3-#15 etc. indicates 90 lines of bars with 3 lengths per line.
For Grid Units see sheet #21 of 123.
Reinforcement bars designated (E) shall be epoxy coated.

SUPERSTRUCTURE
SPAN 6
F.A.P. RT. 315 SECTION 140B-I-4
FULTON AND MASON COUNTIES
STATION 10+646.69

F.A.P. 315	140B-I-4	FULTON & MASON		38

SHEET NO. 18
123 SHEETS

STATE OF ILLINOIS
DEPARTMENT OF TRANSPORTATION

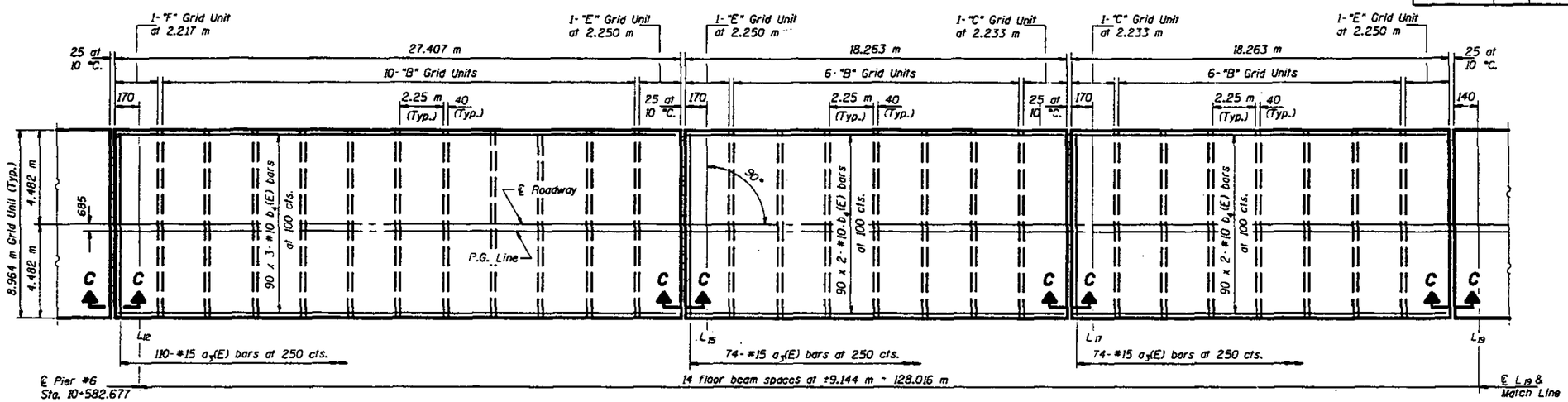

N

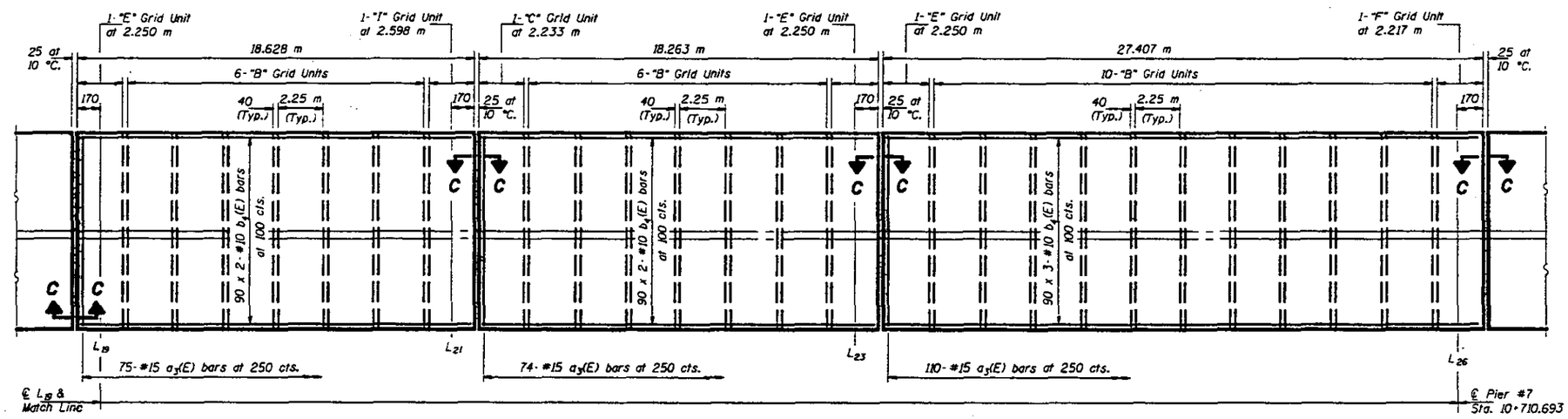

PLAN - SPAN 7

DESIGNED	LSH
CHECKED	TTBB JLC
DRAWN	R. Doty
CHECKED	LSH TTBB

June 26, 1997

DESIGNED Craig D. Koepke ENGINEER OF HIGH. DESIGN
PASSED Robert E. Anderson ENGINEER OF BRIDGES AND STRUCTURES

MIN. BAR LAPS
#10 bars = 360

Notes: For Cross Section see sheet #16 of 123.
For Section C-C and Bill of Material see sheet #22 of 123.
See sheet #24 of 123 for Drainage Scuppers, Special Details. For location see sheet #1 of 123.
Bars indicated thus 90 x 3-#15 etc. indicates 90 lines of bars with 3 lengths per line.
For Grid Units see sheet #21 of 123.
Reinforcement bars designated (E) shall be epoxy coated.

SUPERSTRUCTURE
SPAN 7
F.A.P. RT. 315 SECTION 140B-I-4
FULTON AND MASON COUNTIES
STATION 10+646.69

F.A.P. NO.	SECTION	COUNTY	TOTAL SHEETS	SHEET NO.
F.A.P. 315	140B-I-4	FULTON & MASON		39

SHEET NO. 19
123 SHEETS

STATE OF ILLINOIS
DEPARTMENT OF TRANSPORTATION

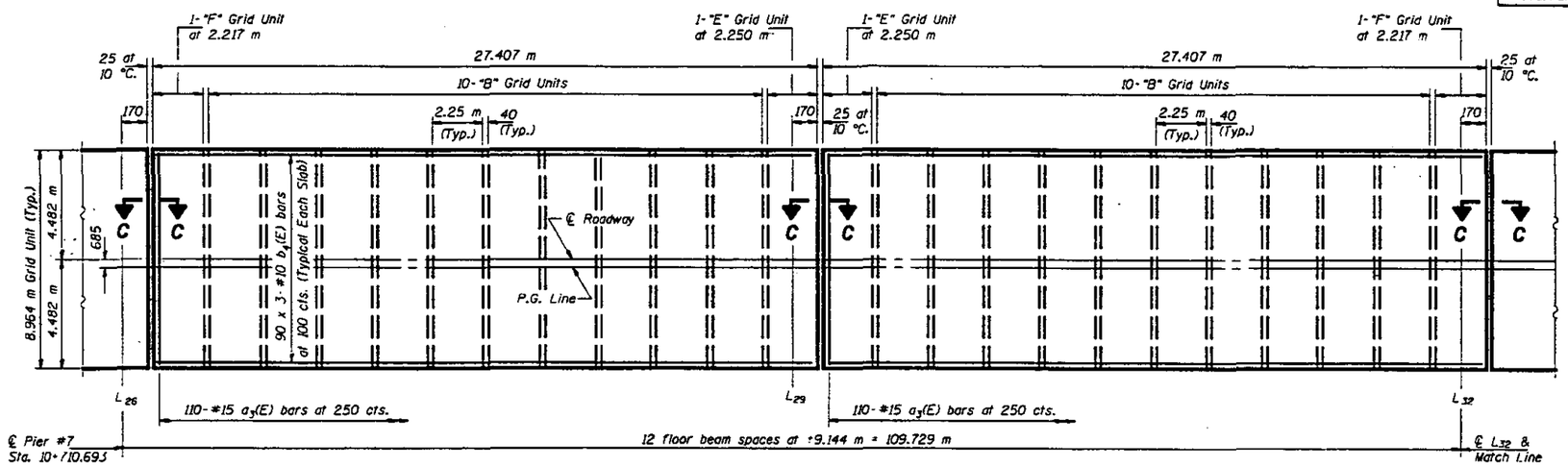

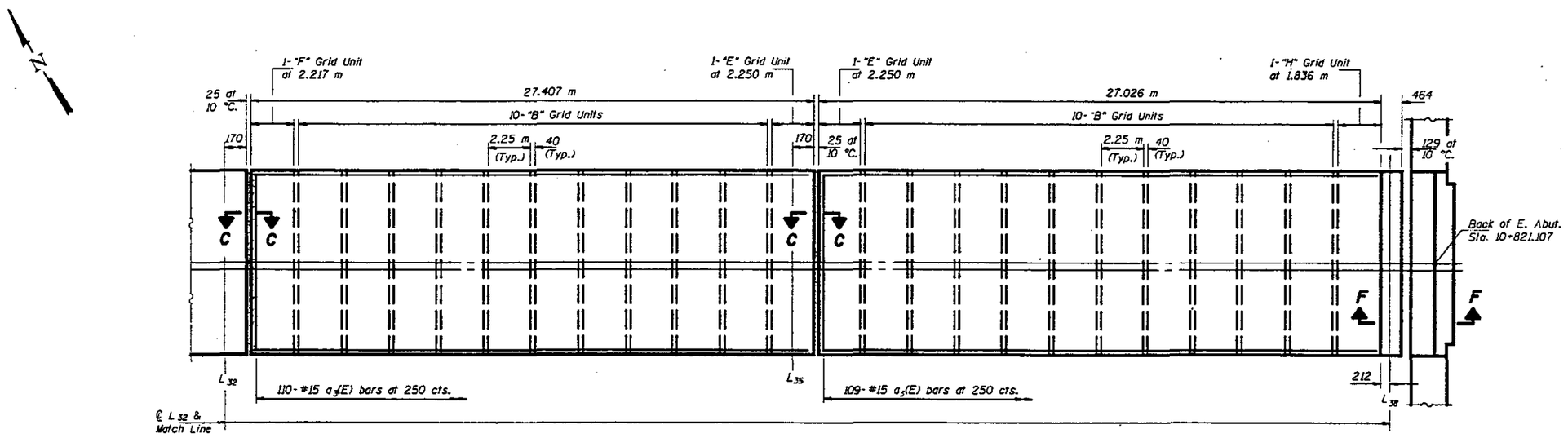

PLAN - SPAN 8

DESIGNED	LSH
CHECKED	TTP-B JLC
DRAWN	R. Daty
CHECKED	LSH TTP-B

June 26, 1997

DRAWING — ENGINEER OF BRIDGE DESIGN
PASSED — ENGINEER OF BRIDGES AND STRUCTURES

MIN. BAR LAPS
#10 bars = 360

Notes: For Cross Section see sheet #16 of 123.
For Sections C-C, F-F and Bill of Material see sheet #22 of 123.
See sheet #24 of 123 for Drainage Scuppers, Special Details. For location see sheet #1 of 123.
Bars indicated thus 90 x 3-#15 etc. indicates 90 lines of bars with 3 lengths per line.
For Grid Units see sheet #21 of 123.
Reinforcement bars designated (E) shall be epoxy coated.

SUPERSTRUCTURE
SPAN 8
F.A.P. RT. 315 SECTION 140B-I-4
FULTON AND MASON COUNTIES
STATION 10+646.69

STATE OF ILLINOIS
DEPARTMENT OF TRANSPORTATION

ROUTE NO.	SECTION	COUNTY	TOTAL SHEETS	SHEET NO.
F.A.P. 315	140B-I-4	FULTON & MASON		40

SHEET NO. 20
123 SHEETS

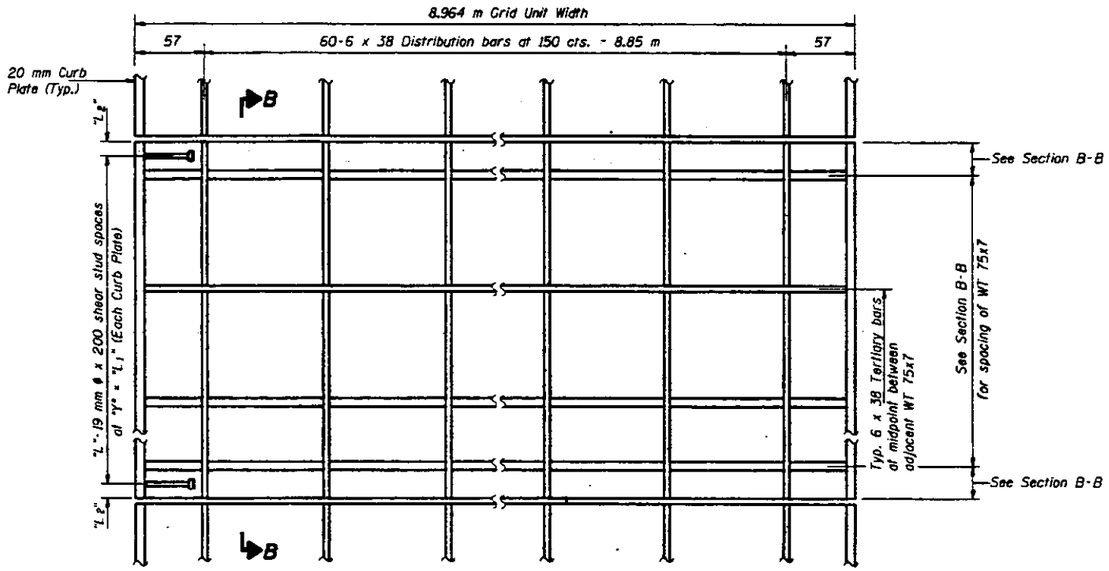

TYPICAL GRID UNIT PLAN

(Grid Unit "B" shown - other units similar)
(Fabricate Grid Units to crown)

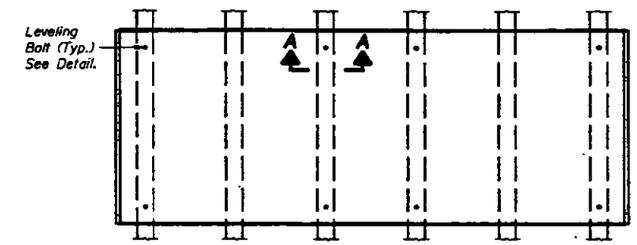

LEVELING BOLT LOCATION PLAN

(8 Required per grid unit)
(Place leveling bolts to miss shear studs)

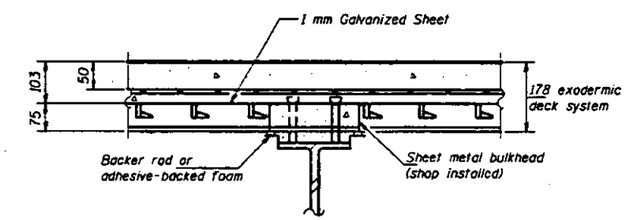

SECTION AT STRINGER

TABLE OF "L" DIMENSIONS

Unit	"L"	"L1"	"L2"	Y
"A"	5	1.50 m	±147	300
"B"	7	2.03 m	±110	290
"C"	7	2.10 m	±67	300
"D"	7	2.10 m	±131	300
"E"	7	2.03 m	±110	290
"F"	7	2.10 m	±59	300
"G"	7	2.10 m	±96	300
"H"	5	1.50 m	±168	300
"I"	8	2.40 m	±99	300

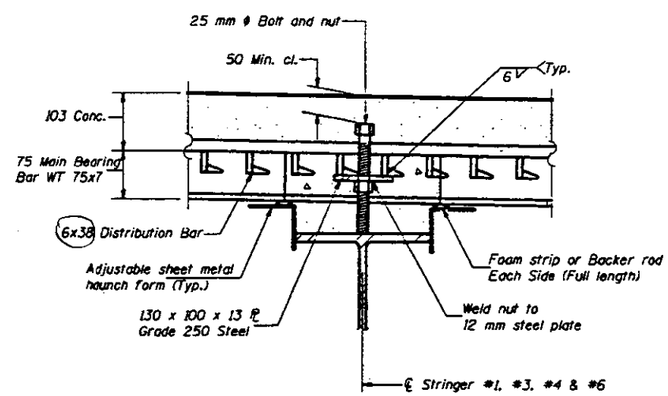

SECTION A-A

Note: For Section B-B see sheet # 21 of 123.

DESIGNED	LSH
CHECKED	TTBB JLC
DRAWN	R. Doty
CHECKED	LSH TTBB

June 26, 1997

ENGINEER OF BRIDGE DESIGN

ENGINEER OF BRIDGES AND STRUCTURES

SUPERSTRUCTURE DETAILS
F.A.P. RT. 315 SEC. 140B-I-4
FULTON AND MASON COUNTIES
STA. 10+646.69

STATE OF ILLINOIS
DEPARTMENT OF TRANSPORTATION

ROUTE NO.	SECTION	COUNTY	DESIGN	SHEET	SHEET NO. 21
F.A.P. 315	140B-1-4	FULTON & MASON		41	123 SHEETS
FED. ROAD DIST. NO. 7		ILLINOIS	FED. AID PROJECT		

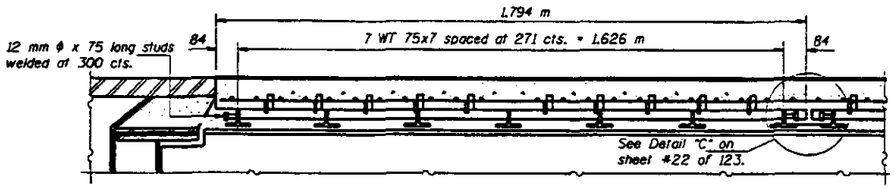

SECTION B-B - "A" GRID UNIT
No. Units Required = 1

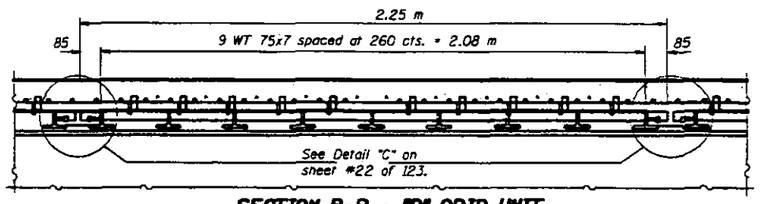

SECTION B-B - "B" GRID UNIT
No. Units Required = 148

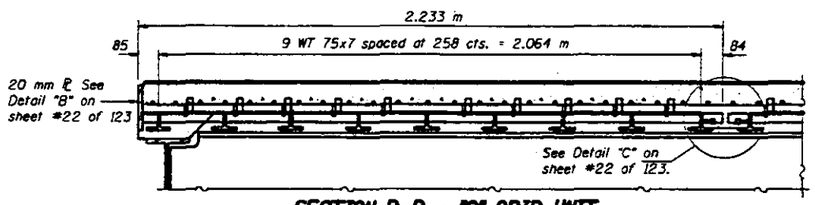

SECTION B-B - "C" GRID UNIT
* No. Units Required = 5
* 2-"C" Grid Units with floor beam along edge are shown. 3-"C" Grid Units with diaphragm along edge are similar.

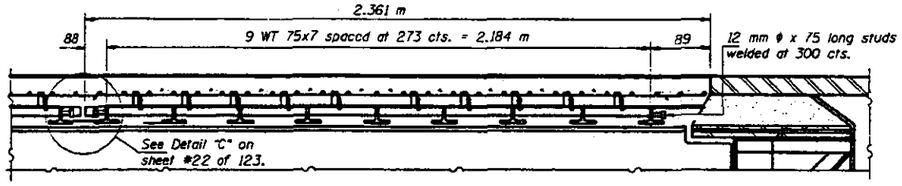

SECTION B-B - "D" GRID UNIT
No. Units Required = 1

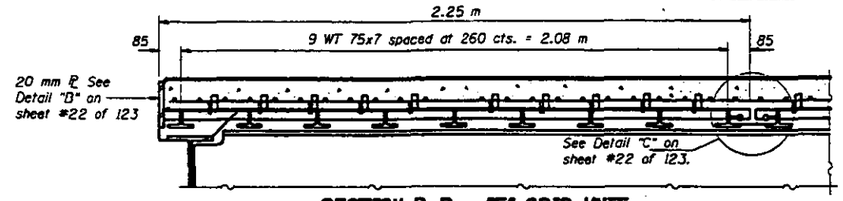

SECTION B-B - "E" GRID UNIT
** No. Units Required = 18
** 9-"E" Grid Units with floor beam along edge are shown. 9-"E" Grid Units with diaphragm along edge are similar.

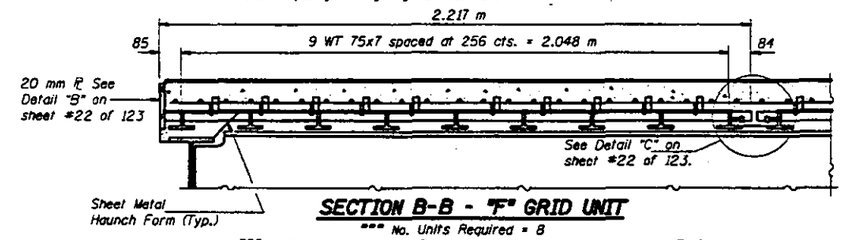

SECTION B-B - "F" GRID UNIT
*** No. Units Required = 8
*** 4-"F" Grid Units with floor beam along edge are shown. 4-"F" Grid Units with diaphragm along edge are similar.

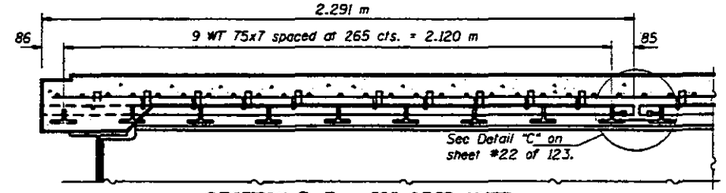

SECTION B-B - "G" GRID UNIT
No. Units Required = 1

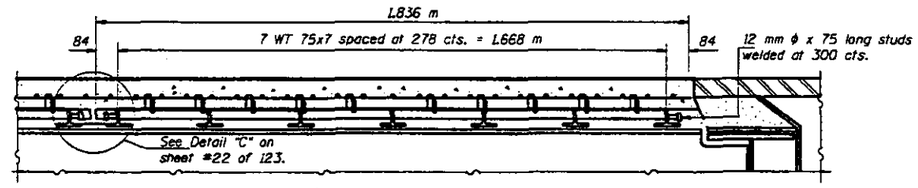

SECTION B-B - "H" GRID UNIT
No. Units Required = 1

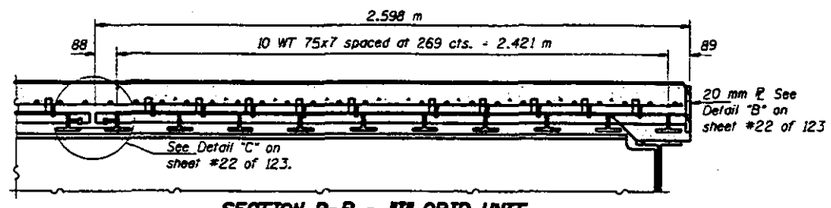

SECTION B-B - "I" GRID UNIT
No. Units Required = 1

Note: For Grid Units "A" and "D" see sheet #27 of 123 for limit of curb plates at Pier 5. For Grid Unit "H" see sheet #20 of 123 for limit of curb plates at East Abutment.

DESIGNED	LSH
CHECKED	TTKS JLC
DRAWN	R. Doty
CHECKED	LSH TTKS

June 26, 1997

DIRECTOR OF HIGHWAYS ENGINEERING

ENGINEER OF BRIDGE AND STRUCTURES

SUPERSTRUCTURE DETAILS
F.A.P. RT. 315 SEC. 140B-1-4
FULTON AND MASON COUNTIES
STA. 10+646.69

STATE OF ILLINOIS
DEPARTMENT OF TRANSPORTATION

F.A.P. 315	140B-1-4	FULTON & MASON		42

SHEET NO. 22
123 SHEETS

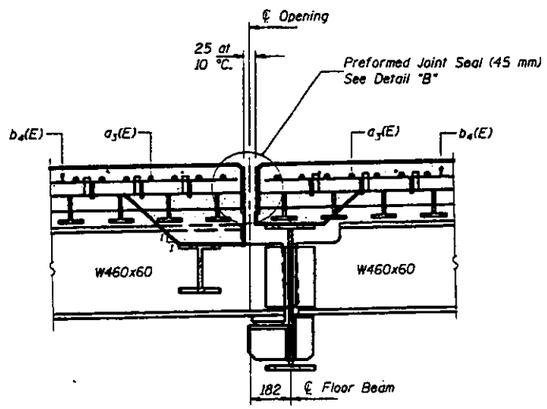

SECTION C-C

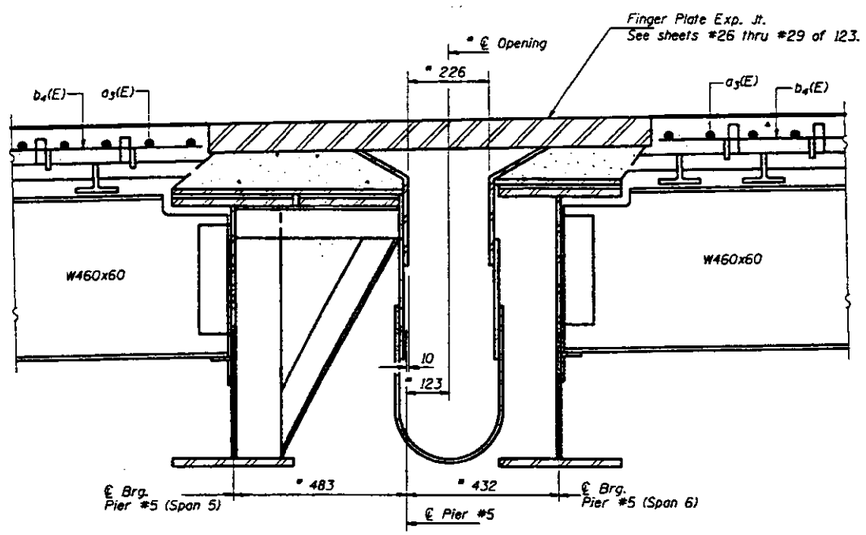

SECTION D-D

* at 10 °C.

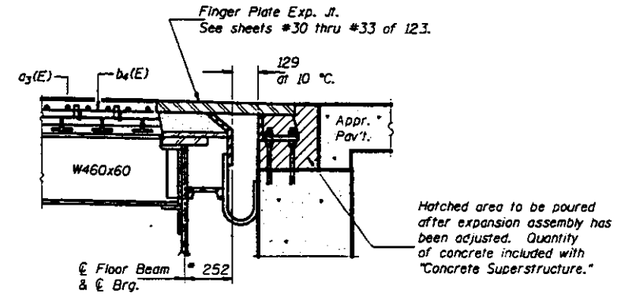

SECTION F-F

* at 10 °C.

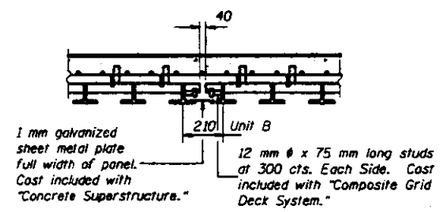

DETAIL "C"

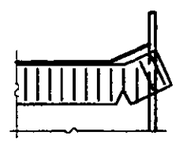

END OF SEAL TREATMENT

Cut PJS. Cost is included with "Preformed Joint Seal (45 mm)

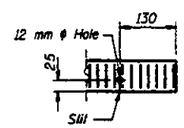

SEAL CUT-OUT

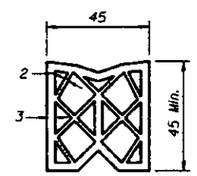

PREFORMED JOINT SEAL (45 mm)

** Furnish in segments of 6 m maximum length. Maximum space between installed segments shall be 5 mm. Seal space with Silicone Sealant suitable for Structural Steel.

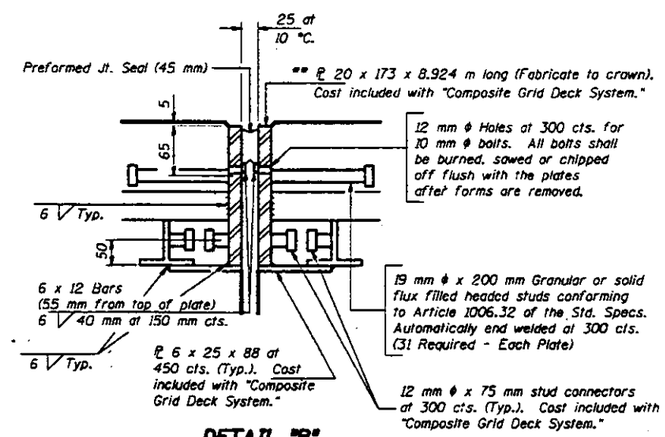

DETAIL "B"

TRUSS SPANS
BILL OF MATERIAL

Bar	No.	Size	Length (m)	Shape
a2(E)	136	#15	0.61	—
a3(E)	1691	#15	8.84	—
a4(E)	34	#15	1.00	⌣
b4(E)	4140	#10	9.44	—
Reinforcement Bars, Epoxy Coated			kg	54330
Concrete Superstructure			m³	443.0
Preformed Joint Seal 45 mm			m	142.8

Notes: All surfaces of the steel plates for relief joints shall be galvanized in accordance with AASHTO M111 and ASTM A123. Shear studs shall be welded to plates before galvanizing.
Reinforcement bars designated (E) shall be epoxy coated.

DESIGNED	LSH
CHECKED	TTPB
DRAWN	R. Doty
CHECKED	LSH TTPB

June 26, 1997
DRAWING — ENGINEER OF BRIDGE DESIGN
PASSED — ENGINEER OF BRIDGES AND STRUCTURES

SUPERSTRUCTURE DETAILS
SPANS #5 THRU #8
F.A.P. RT. 315 SECTION 140B-1-4
FULTON AND MASON COUNTIES
STATION 10+646.69

STATE OF ILLINOIS
DEPARTMENT OF TRANSPORTATION

F.A.P. 315	140B-1-4	FULTON & MASON		43

SHEET NO. 23
123 SHEETS

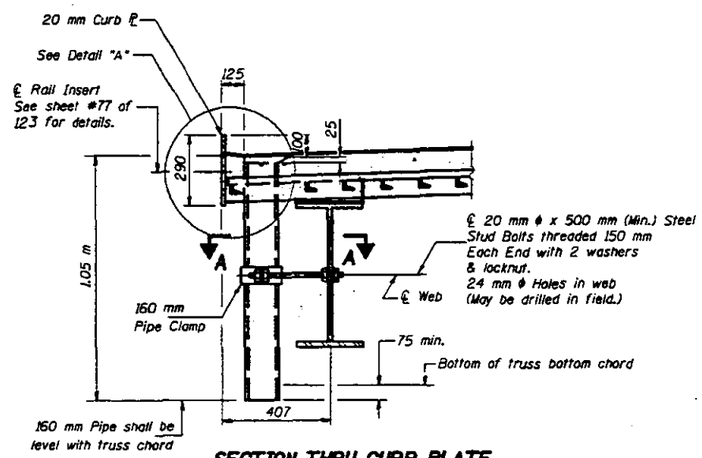

SECTION THRU CURB PLATE
(Span 7)

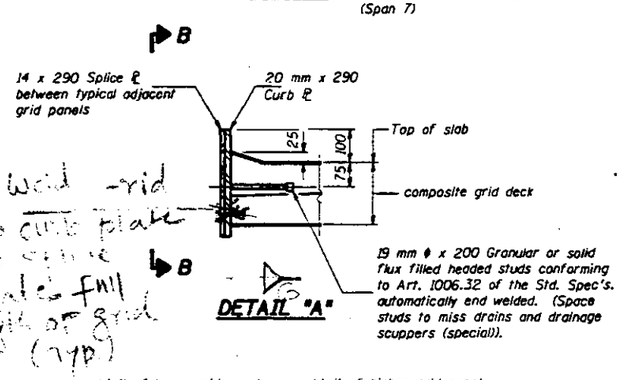

DETAIL "A"

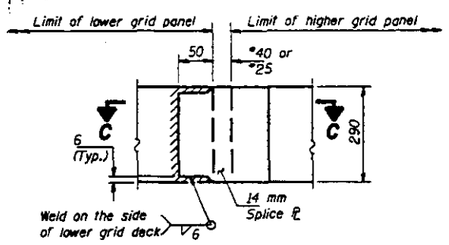

SECTION B-B
* At 10 °C

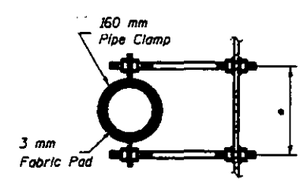

SECTION A-A

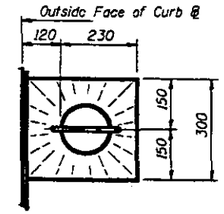

TOP PLAN
(Standard Floor Drain)

* Dimension as required by Pipe Clamp

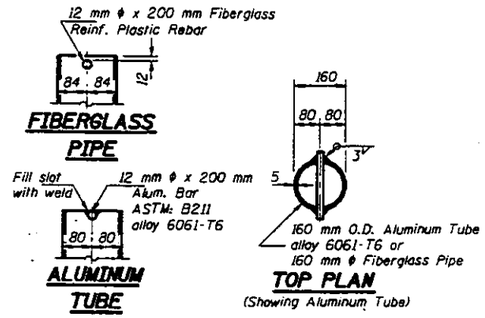

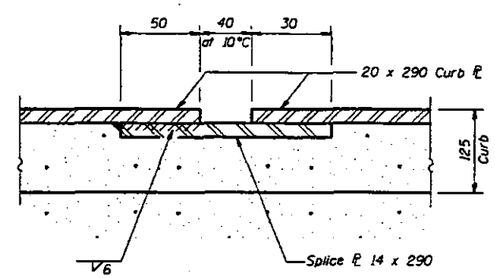

SECTION C-C
At 40 mm opening
(Showing splice ℄ inside the 20 mm curb ℄ - Splice ℄ outside the 20 mm curb ℄ is similar)

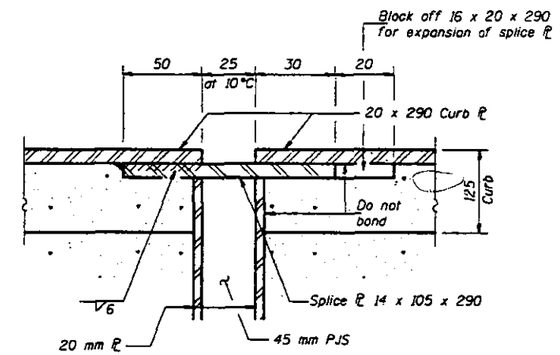

SECTION C-C
At 25 mm opening
(Showing splice ℄ inside the 20 mm curb ℄ - Splice ℄ outside the 20 mm curb ℄ is similar)

Curb plates including curb splice plates shall be galvanized in accordance with AASHTO M 111 and ASTM A123. Cost is included with "Composite Grid Deck System". Shear studs shall be welded to curb plate before galvanizing.

Notes:
The exterior surfaces of the Floor Drains and Drainage Scuppers, Special shall be painted with the final coat of the paint system specified for Structural Steel. The exterior surface of the drain shall be cleaned and given a washcoat pretreatment in accordance with Steel Structural Painting Council's Spec. SSPC-SP1 & SSPC-Paint 27 prior to painting. Fiberglass to have a prewash as per MIL-P-15328 prior to painting.
Fiberglass pipe shall conform to ASTM: D2996, with short-time rupture strength hoop tensile stress of 200 Mpa minimum. The surface of the Fiberglass pipe shall be free of bond inhibiting agents.

Notes: At location where rail post anchors may interfere with the 14 x 290 splice plate, place the splice plate inside of the 20 x 290 curb plate instead of on the outside as shown.

DESIGNED	LSM
CHECKED	TTBb
DRAWN	R. Doty
CHECKED	LSM TTBb

June 26, 1997
EXAMINED
CHIEF OF BRIDGE DESIGN
PASSED
CHIEF OF BRIDGES AND STRUCTURES

SUPERSTRUCTURE DETAILS
SPANS #5 THRU #8
F.A.P. RT. 315 SECTION 140B-1-4
FULTON AND MASON COUNTIES
STATION 10+646.69

STATE OF ILLINOIS
DEPARTMENT OF TRANSPORTATION

F.A.P. 315	1408 1-4	FULTON & MASON		44	SHEET NO. 24 / 123 SHEETS

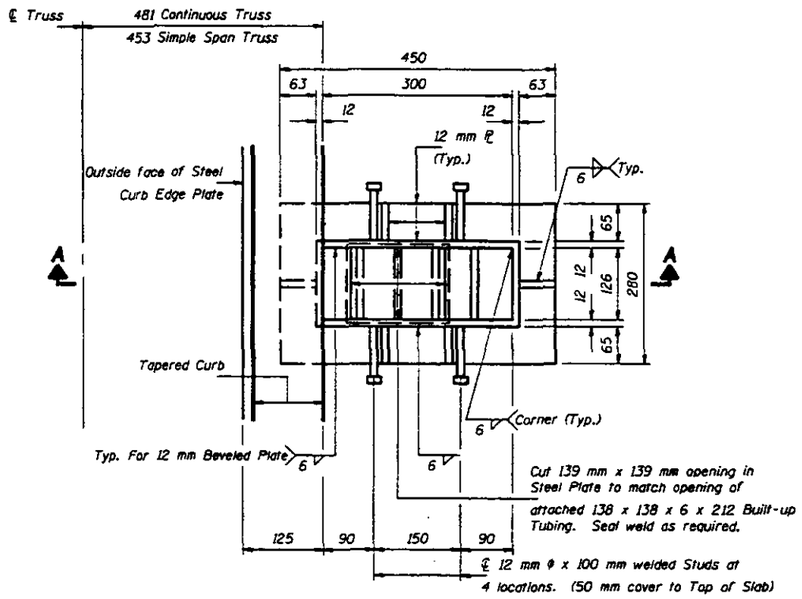

SCUPPER DETAIL PLAN VIEW

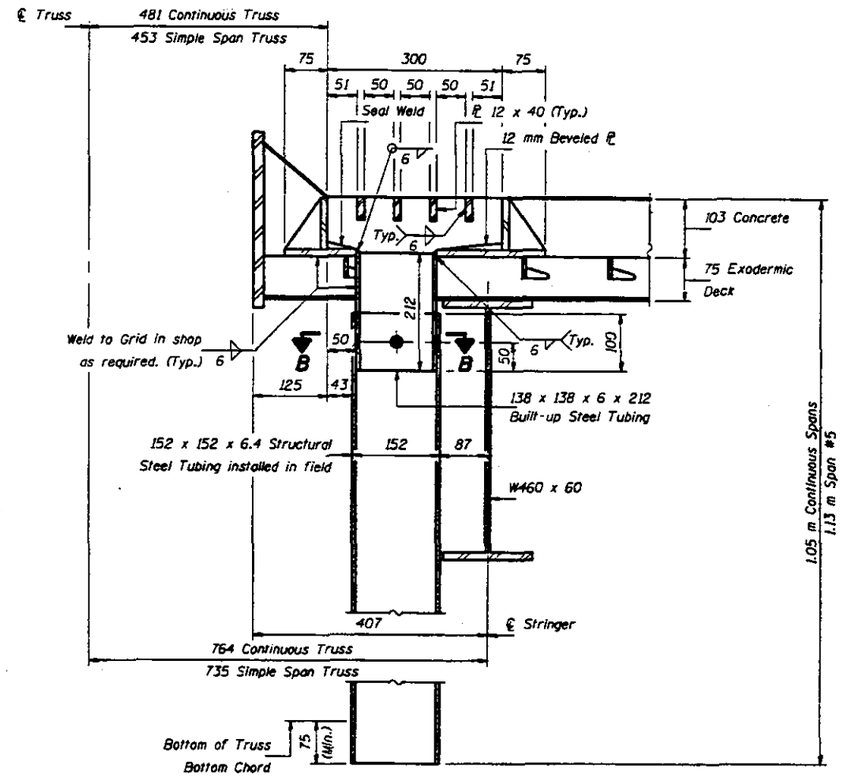

SECTION A-A

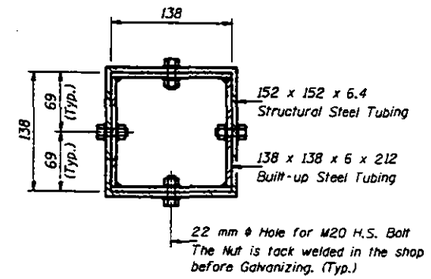

SECTION B-B

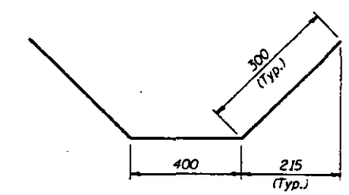

BAR a_4(E)

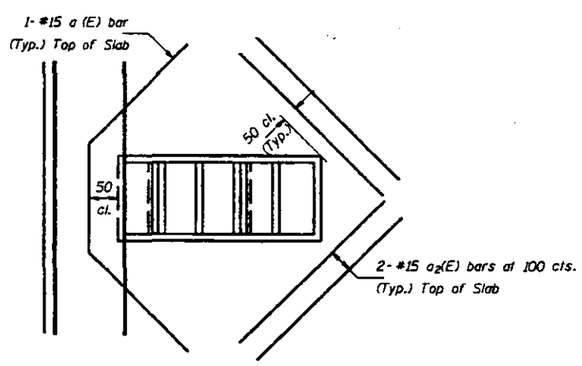

SCUPPER DETAIL PLAN VIEW
(Showing Reinforcement in top of slab.)

Notes: Hollow structural steel tubing shall conform to the requirements of ASTM designation A 500 Grade B. or A 501 Structural Steel Tubing.
All other shapes, plates and bars shall conform to the requirements of AASHTO M 270M Grade 250.
Bolts, studs, washers and nuts shall conform to the requirements of ASTM A 307.
The Grate, Frame and Downspout shall be galvanized after shop fabrication according to AASHTO M 111 & ASTM A 385.
All bolts, washers and nuts shall be galvanized according to AASHTO M 232.
Cost of the Grate, Frame, Downspout, Bolts, Washers and Nuts including complete installation of Scupper will be paid for at the unit bid price each for "DRAINAGE SCUPPERS SPECIAL."
Position Drainage Scupper (Special) to miss WT75 x 7 of grid deck.
Cut reinforcement bars 6 x 38 distribution bars and 6 x 38 tertiary bars in the shop to clear Drainage Scupper.
All dimensions are in millimeters (mm) except as noted.

BILL OF MATERIAL

Item	Unit	Total
Drainage Scupper (Special)	Each	34

DESIGNED	LSH
CHECKED	TTP.S.
DRAWN	John F. Schneller Jr.
CHECKED	LSH TTP.S.

June 26, 1997
ENGINEER OF BRIDGE DESIGN
ENGINEER OF BRIDGE AND STRUCTURE

DRAINAGE SCUPPER (SPECIAL)
F.A.P. RT. 315 SEC. 1408-I-4
FULTON AND MASON COUNTIES
STA. 10+646.69

F.A.P. 315	140B-1-4	FULTON & MASON		45	SHEET NO. 25 / 123 SHEETS

STATE OF ILLINOIS
DEPARTMENT OF TRANSPORTATION

Joint Size	"C" at 10 °C	"D" at 10 °C
50	50	40 Min.
65	65	45 Min.
100	75	65 Min.

INSTALLATION NOTES

1. Apply adhesive to metal surfaces prior to installation of seal.
2. Install continuous seal in roadway and curb plate.
3. Install anchor blocks as indicated.
4. 16 mm ϕ stainless steel bolts with washers and nuts. Provide brass grommet in elastomeric membrane.

NOTE A: Maximum spacing of anchor bolts shall be 300 centers.

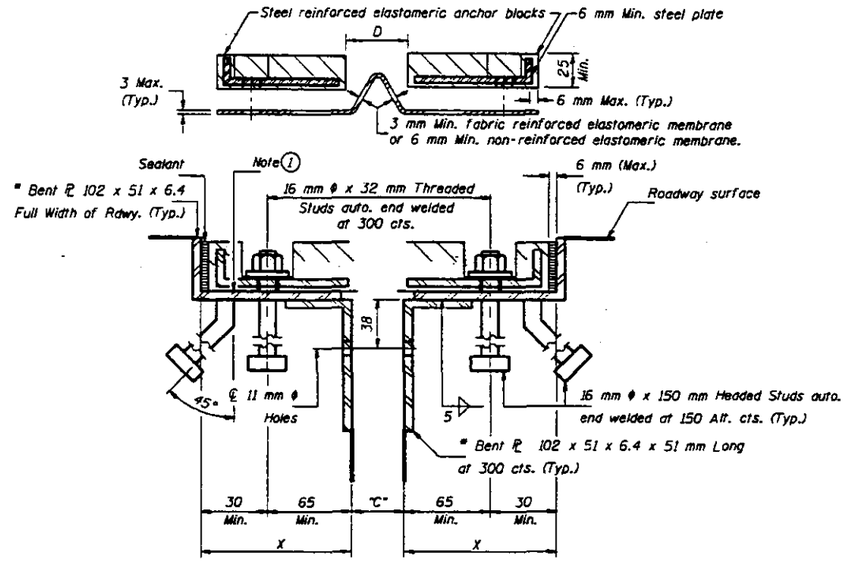

CROSS SECTION

* Equivalent clipped angle will be allowed in lieu of Bent ℞.

GENERAL NOTES

Continuous Seal Neoprene Expansion Joint shall consist of molded anchor blocks of elastomer and steel, field assembled over continuous lengths of elastomeric membrane.

The elastomeric membrane shall be premolded with a single or a double upward convolution that will have a "memory" to return to its molded position upon joint closure.

The convolution length shall be such that the extended length will not be greater than the manufactured length when the joint is fully expanded in its design range and will not protrude above the anchor blocks when the joint is fully compressed.

Joint openings shall be adjusted in accordance with Article 503.10(c) of the Standard Specifications when the deck is poured at an ambient temperature other than 10 °C.

The parapet and roadway membrane shall be made continuous by an approved vulcanizing process. Lapping will not be permitted.

This work shall consist of furnishing and installing the neoprene expansion joint and anchorage devices according to the details shown on the plans, Sections 503 and 505 of the Standard Specifications and as modified below.

Included in this work is the furnishing and installation of the structural steel anchorage devices shown. This structural steel shall be shop painted with the inorganic zinc rich primer per AASHTO M300, type I.

METHOD OF MEASUREMENT. The neoprene expansion joint (special) will be measured for payment in meters, in place, along the centerline of the joint. The structural steel anchorage devices will not be measured for payment.

BASIS OF PAYMENT. Neoprene expansion joints (special) will be paid for at the contract unit price per meter for NEOPRENE EXPANSION JOINT (SPECIAL), of the expansion range size specified. This price will be payment in full for the threaded studs, anchorage devices, installing hardware, sealant and adhesive, seat preparation and installation. No additional compensation will be allowed the Contractor for correction of the anchorage devices necessary to properly install the expansion device.

All dimensions are in millimeters (mm) except as noted.

All structural steel shall be galvanized in accordance with AASHTO M 111 and ASTM A123. Studs shall be welded to bent plates before galvanizing.

The estimated mass of structural steel is 458 kg. and is included for payment in the item NEOPRENE EXPANSION JOINT (SPECIAL), of the expansion range size specified.

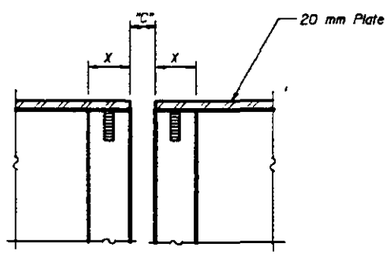

FORMING BLOCKOUT - SKETCH

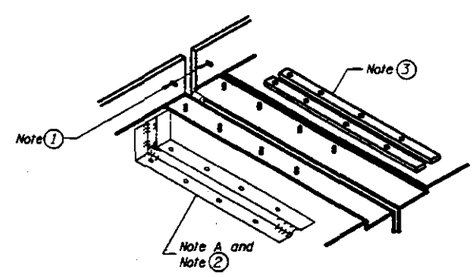

AT END OF SLAB

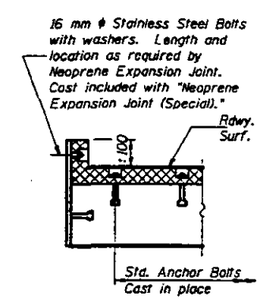

AT END OF SLAB

DESIGNED	JLC
CHECKED	TTBB
DRAWN	R. Doty
CHECKED	JLC TTBB

June 26, 1997

EXAMINED [signature] ENGINEER OF FIELD DESIGN

PASSED [signature] ENGINEER OF BRIDGES AND STRUCTURES

EJ-CS 00 7-1-94

CONTINUOUS SEAL TYPE NEOPRENE EXPANSION JOINTS(SPECIAL)
For 50, 65 and 100 Movement

F.A.P. RT. 315 SECTION 140B-1-4
FULTON AND MASON COUNTIES
STATION 10+646.69

STATE OF ILLINOIS
DEPARTMENT OF TRANSPORTATION

F.A.P. 315	140B-I-4	FULTON & MASON		46

SHEET NO. 26
123 SHEETS

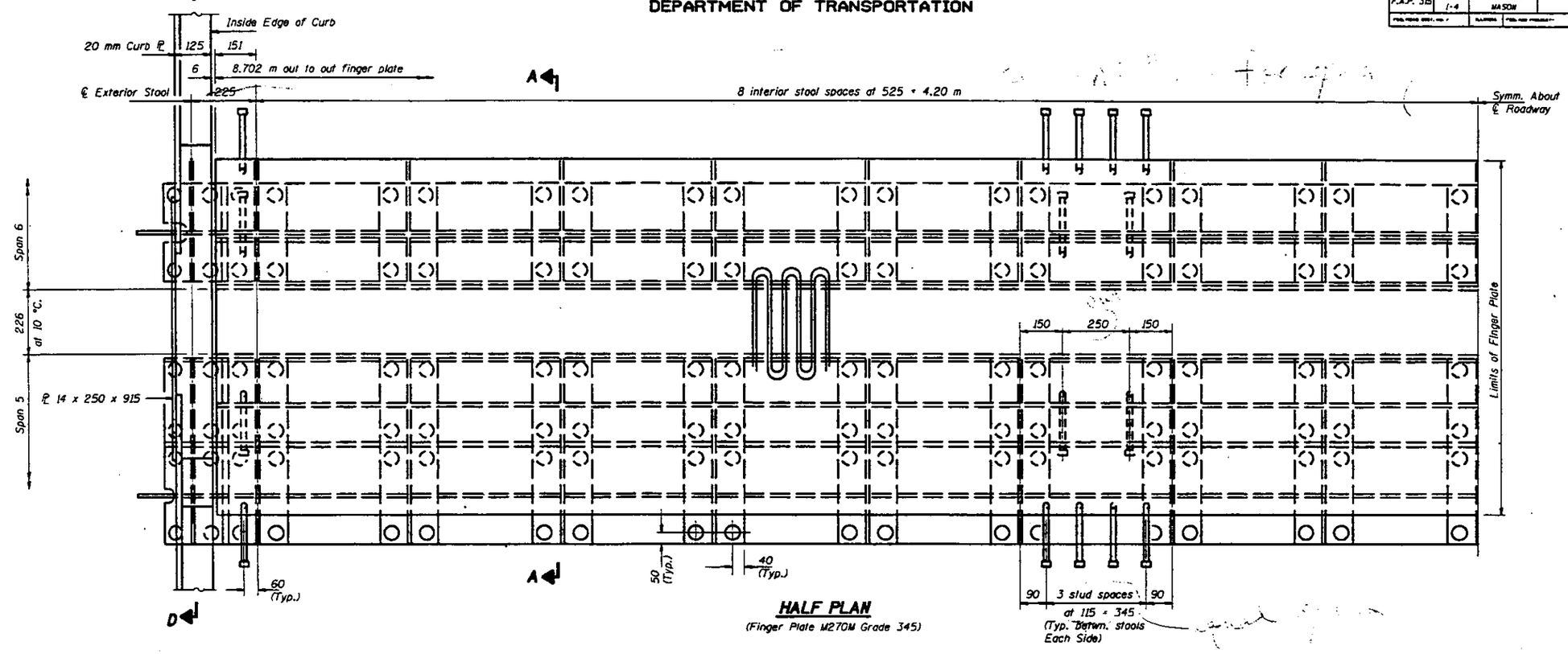

HALF PLAN
(Finger Plate M270M Grade 345)

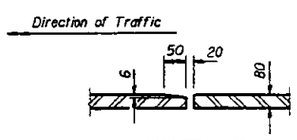

SECTION E-E

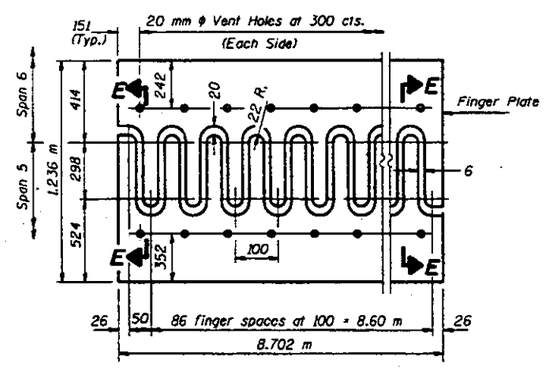

FLAME CUTTING DIAGRAM

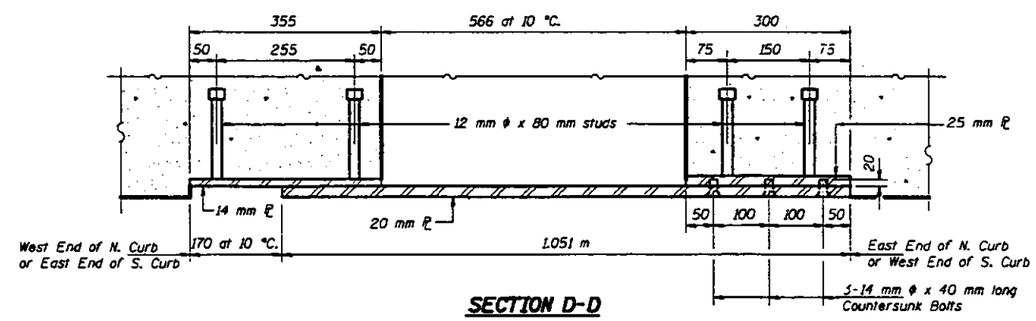

SECTION D-D

DESIGNED	LSH
CHECKED	DJS
DRAWN	R. Doty
CHECKED	LSH DJS

June 26, 1997

CHANGED [signature] ENGINEER OF NATURAL RESOURCES
PASSED [signature] ENGINEER OF BRIDGES AND STRUCTURES

Note: Work this sheet with sheets #27, #28 and #29 of 123.

EXP. JOINT AT PIER #5
F.A.P. RT. 315 SECTION 140B-I-4
FULTON AND MASON COUNTIES
STATION 10+646.69

F.A.P. 315	140B-I-4	FULTON & MASON		47	123 SHEETS

SHEET NO. 27

STATE OF ILLINOIS
DEPARTMENT OF TRANSPORTATION

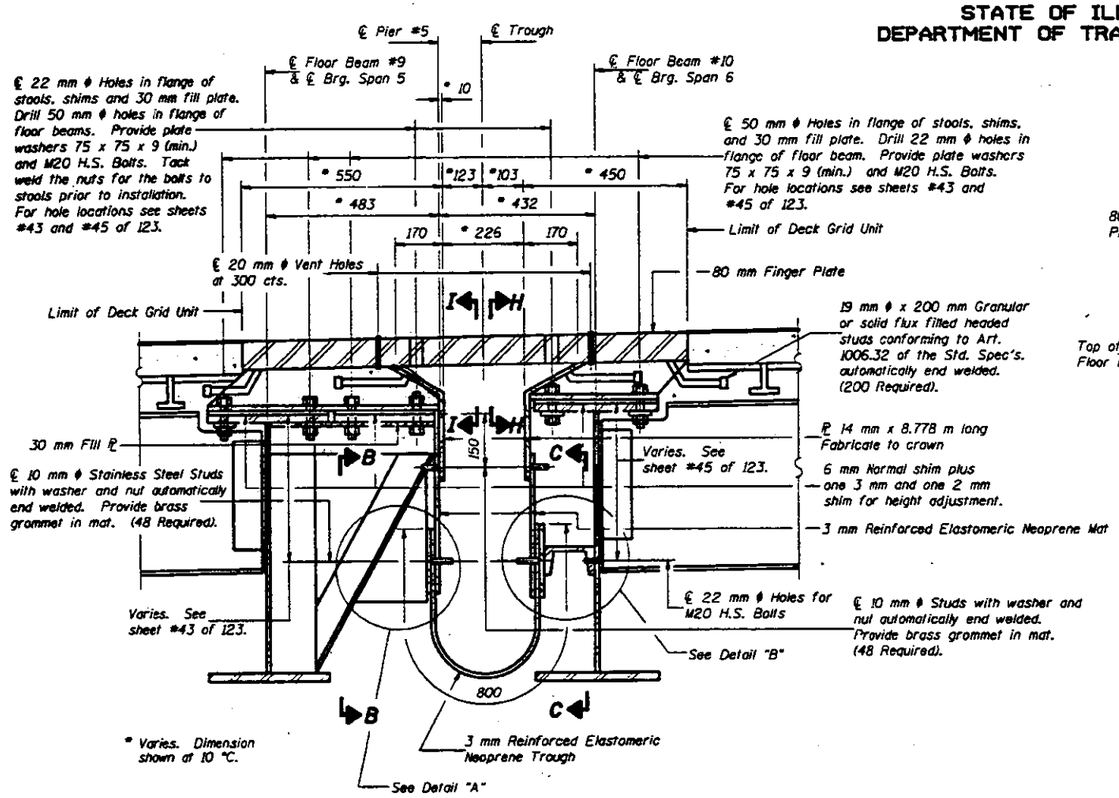

SECTION A-A
(Looking North)

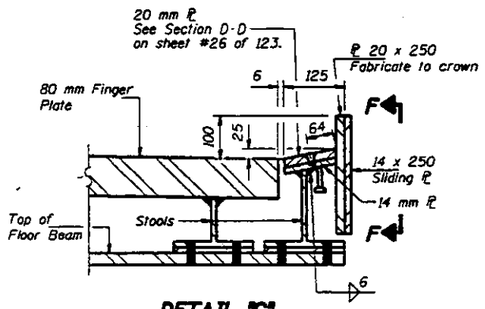

DETAIL "C"

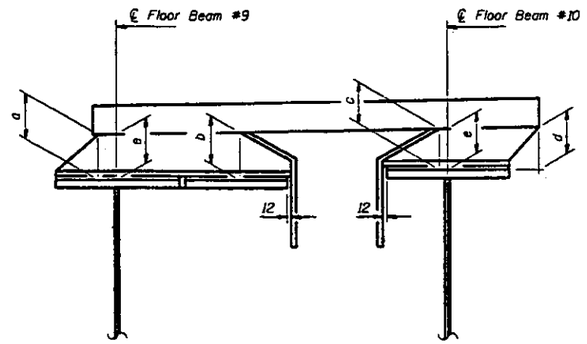

LAYOUT OF STOOL HEIGHTS

** TABLE OF a THRU e DIMENSIONS
(Dimensions are given at ℄ stool webs)

Dimension (mm)	Stool No. 1	2	3	4	5	6	7	8	9	10
a	155	101	109	117	125	132	140	148	156	163
b	175	122	130	137	145	153	160	168	176	184
c	157	104	111	119	127	135	142	150	158	165
d	172	118	126	134	141	149	157	165	172	180
e	159	105	113	121	128	136	144	152	159	167

** Dimensions shown do not include any shim plates or normal shims.

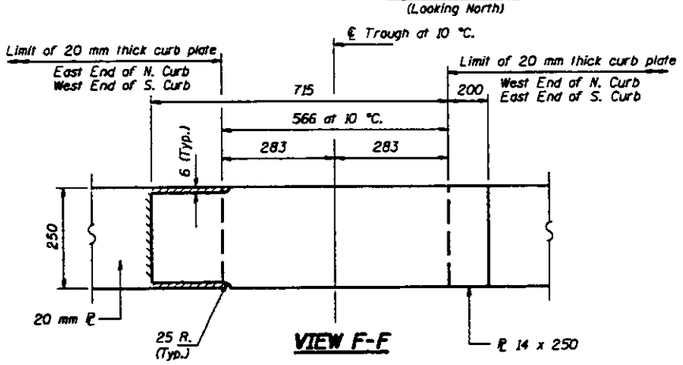

VIEW F-F

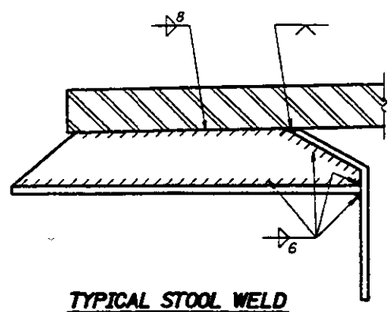

TYPICAL STOOL WELD

Note: Work this sheet with sheets #26, #28 and #29 of 123.

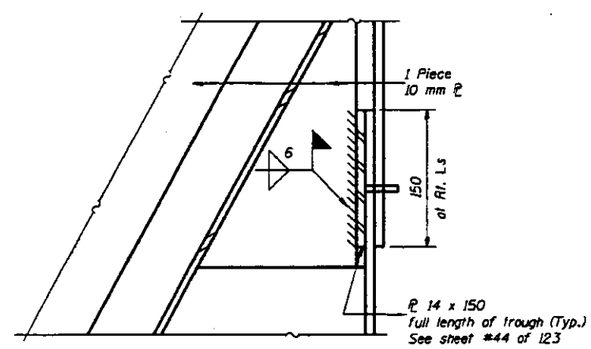

DETAIL "A"

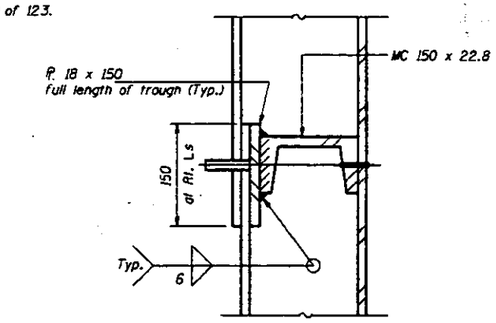

DETAIL "B"

DESIGNED	LSH
CHECKED	DJS
DRAWN	R. Doty
CHECKED	LSH DJS

June 26, 1997

CHECKED Engineer of State Bridge

PASSED Engineer of Bridge and Structures

EXP. JOINT AT PIER #5
F.A.P. RT. 315 SECTION 140B-I-4
FULTON AND MASON COUNTIES
STATION 10+646.69

STATE OF ILLINOIS
DEPARTMENT OF TRANSPORTATION

F.A.P. NO.	SECTION	COUNTY	TOTAL SHEETS	SHEET NO.
F.A.P. 315	140B-I-4	FULTON & MASON		48

SHEET NO. 28
123 SHEETS

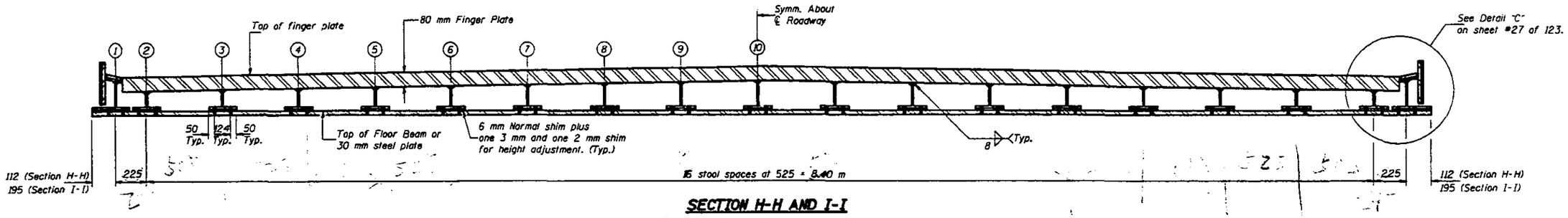

SECTION H-H AND I-I

For Table of stool heights see sheet

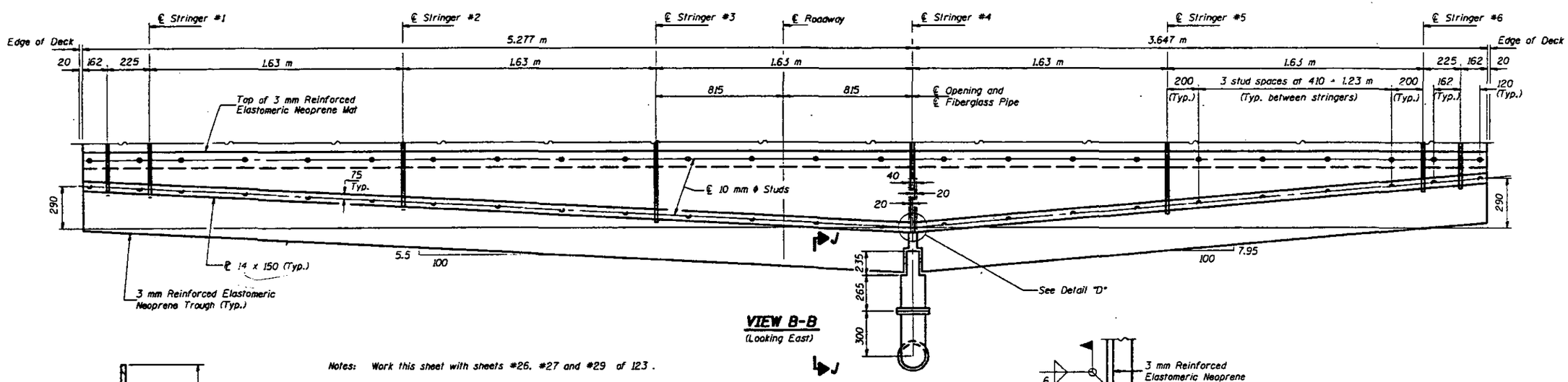

VIEW B-B

(Looking East)

Notes: Work this sheet with sheets #26, #27 and #29 of 123.

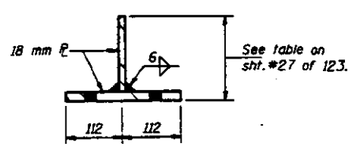

TYPICAL STOOL

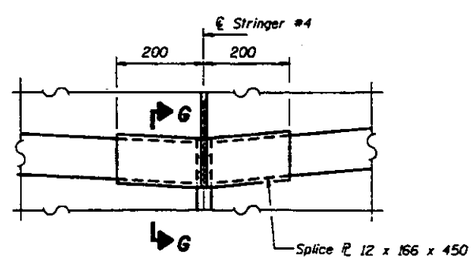

DETAIL "D"

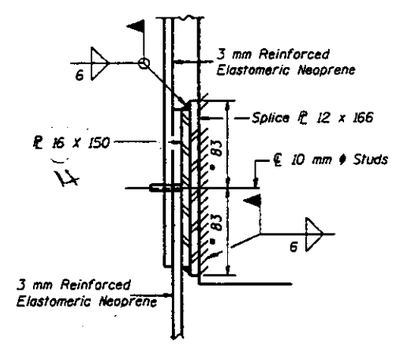

SECTION G-G

* At Rt. L's

DESIGNED	LSH
CHECKED	DJS
DRAWN	R. Doty
CHECKED	LSH DJS

June 26, 1997

DIVISION HEADER OF BRIDGE OFFICE

ENGINEER OF BRIDGES AND STRUCTURES

EXP. JOINT AT PIER #5
F.A.P. RT. 315 SECTION 140B-I-4
FULTON AND MASON COUNTIES
STATION 10+646.69

STATE OF ILLINOIS
DEPARTMENT OF TRANSPORTATION

F.A.P. 315	140B-1-4	FULTON & MASON		49	SHEET NO. 29 / 123 SHEETS

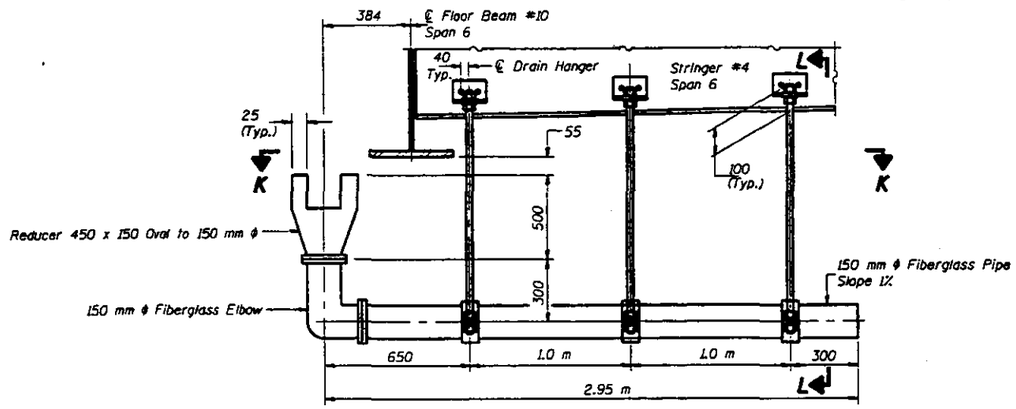

VIEW J-J

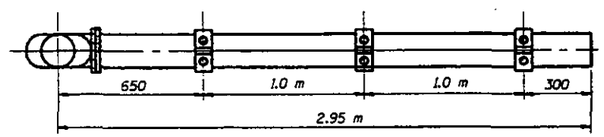

VIEW K-K

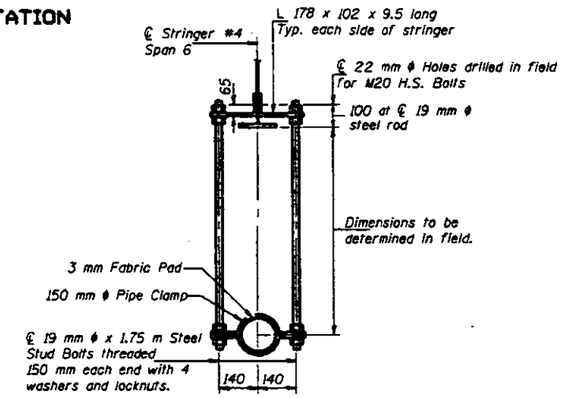

SECTION L-L

Notes: The exterior surfaces of the finger plate drain and attachments shall be painted in accordance with the paint system specified for Structural Steel.

Fiberglass pipe shall conform to ASTM: D2996, with short-time rupture strength hoop tensile stress of 200 MPa minimum.

Cost of 150 mm ϕ fiberglass pipe, elbow, reducer and hangers is included with "Reinforced Neoprene Expansion Joint Treatment".

Cost of field drilled holes is included with "Structural Steel".

Cost of the finger plate drain and attachments is included with "Reinforced Neoprene Expansion Joint Treatment."

Work this sheet with sheets #26, #27 and #28 of 123 .

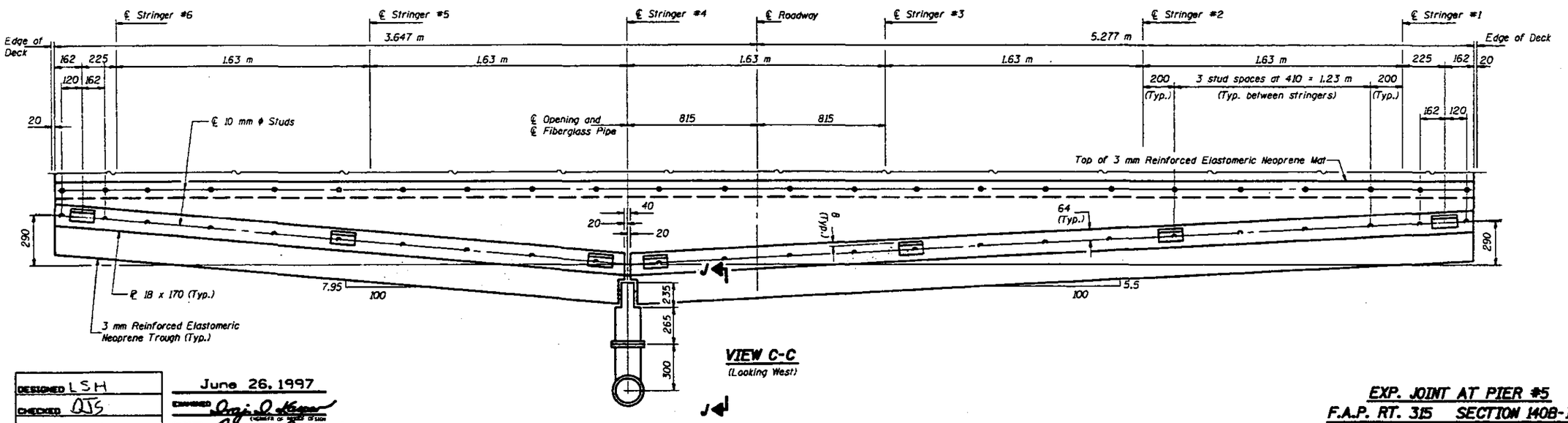

VIEW C-C
(Looking West)

DESIGNED	LSH
CHECKED	DJS
DRAWN	R. Daty
CHECKED	LSH DJS

June 26, 1997

ENGINEER OF MOBILE DESIGN

ENGINEER OF BRIDGES AND STRUCTURES

EXP. JOINT AT PIER #5
F.A.P. RT. 315 SECTION 140B-1-4
FULTON AND MASON COUNTIES
STATION 10+646.69

STATE OF ILLINOIS
DEPARTMENT OF TRANSPORTATION

RT. NO.	SECTION	COUNTY	TOTAL SHEETS	SHEET NO.
F.A.P. 315	140B-1-4	FULTON & MASON		
FED. ROAD DIST. NO. 7	ILLINOIS	FED. AID PROJECT-		

SHEET NO. 30
123 SHEETS

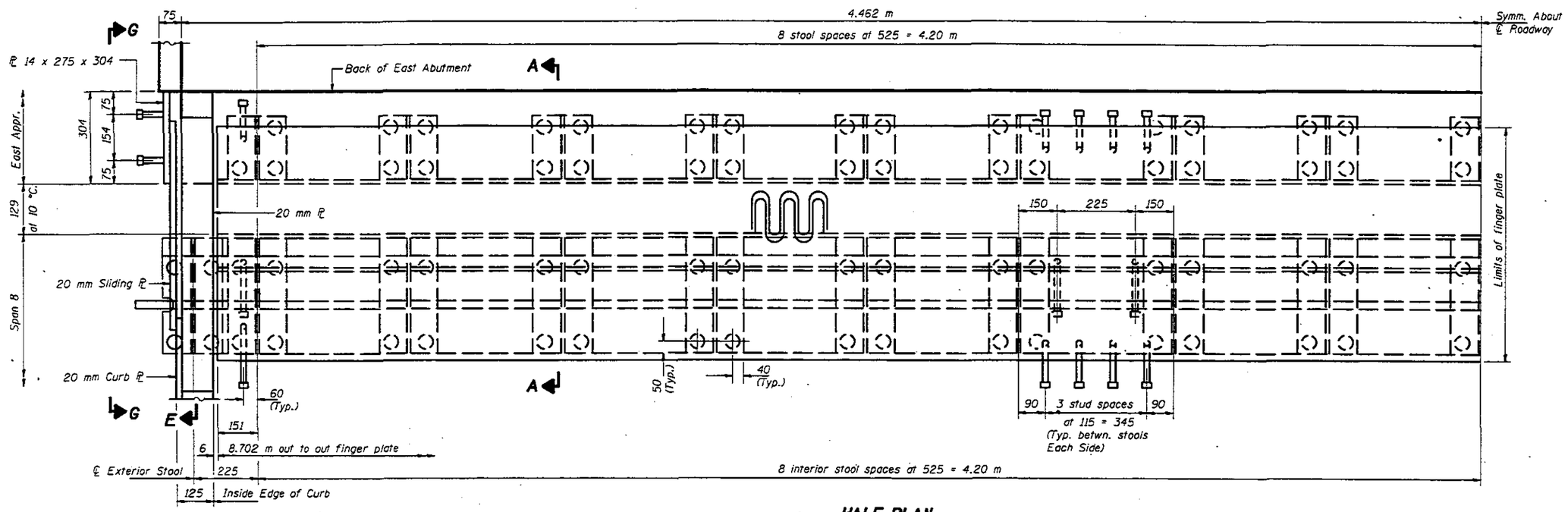

HALF PLAN
Finger Plate M270M Grade 345)
△1

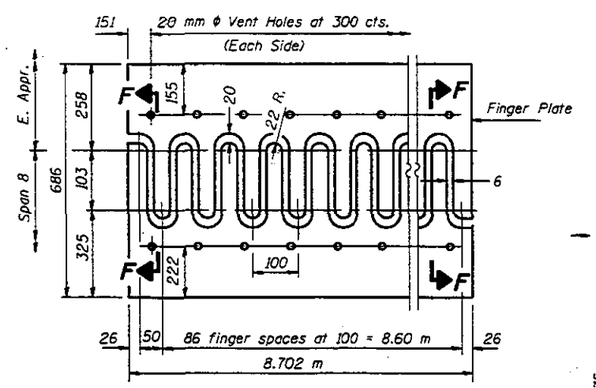

FLAME CUTTING DIAGRAM

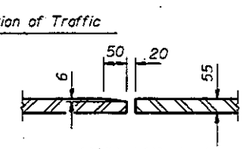

SECTION F-F

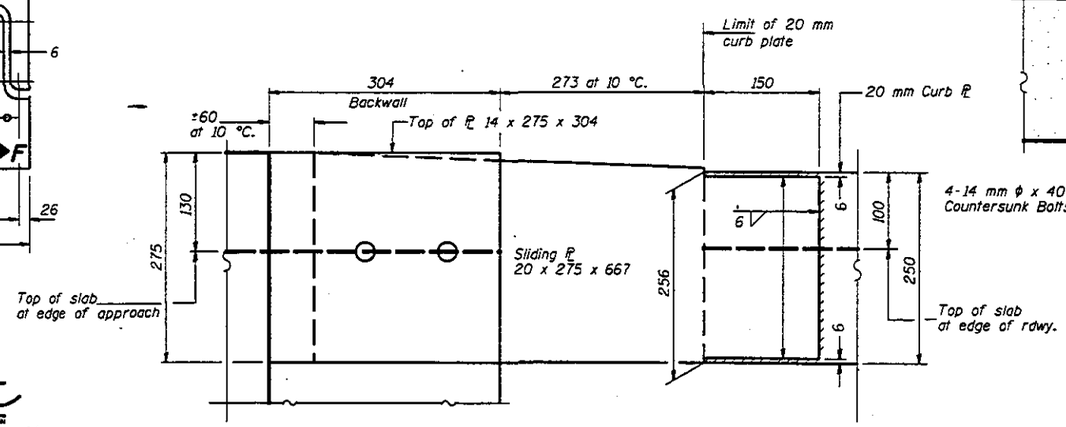

VIEW G-G

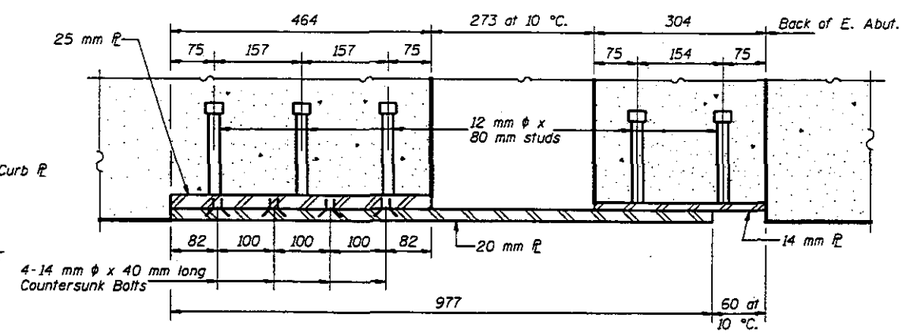

SECTION E-E

DESIGNED	LSH
CHECKED	DJS
DRAWN	R. Doty
CHECKED	DJS LSH

June 26, 1997
EXAMINED — ENGINEER OF BRIDGE DESIGN
PASSED — ENGINEER OF BRIDGES AND STRUCTURES

Work this sheet with sheets #31, #32 and #33 of 123.

EXPANSION JOINT AT EAST ABUTMENT
F.A.P. RT. 315 SECTION 140B-I-4
FULTON AND MASON COUNTIES
STATION 10+646.69

△1 Revised 7-16-97 STD

\projects\rad00012\0630002a.dgn Jul. 21, 1997 15:28:19

STATE OF ILLINOIS
DEPARTMENT OF TRANSPORTATION

F.A.P. NO.	SECTION	COUNTY	TOTAL SHEETS	SHEET NO.
F.A.P. 315	140B-I-4	FULTON & MASON		51

SHEET NO. 31
123 SHEETS

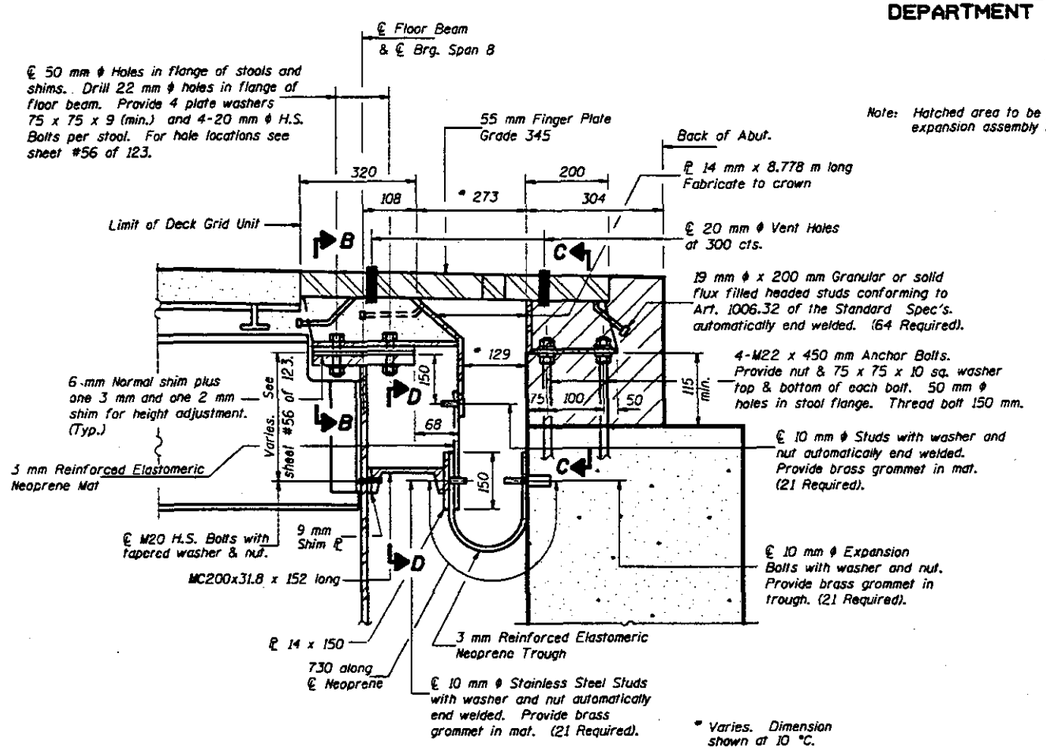

SECTION A-A
(Looking North)

* Varies. Dimension shown at 10 °C.

Note: Hatched area to be poured after expansion assembly has been adjusted.

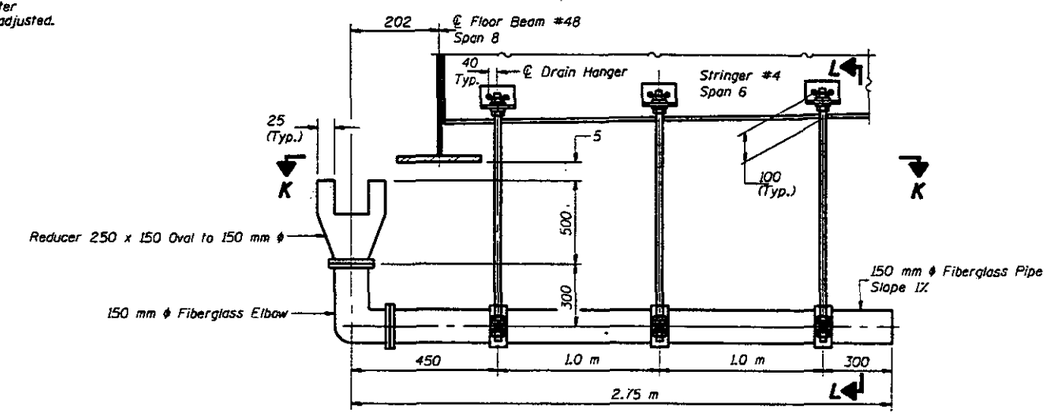

VIEW J-J

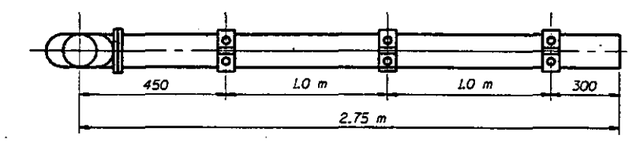

VIEW K-K

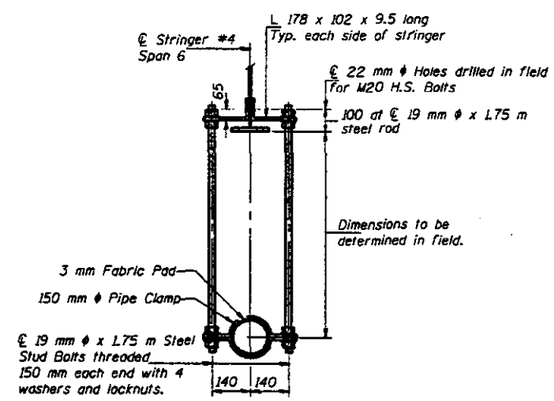

SECTION L-L

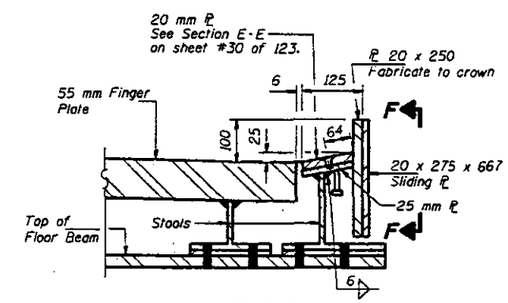

DETAIL "A"

Notes: The exterior surfaces of the finger plate drain and attachments shall be painted in accordance with the paint system specified for Structural Steel.

Fiberglass pipe shall conform to ASTM: D2996, with short-time rupture strength hoop tensile stress of 200 MPa minimum.

Cost of 150 mm ϕ fiberglass pipe, elbow, reducer and hangers is included with "Reinforced Neoprene Expansion Joint Treatment".

Cost of the finger plate drain and attachments is included with "Reinforced Neoprene Expansion Joint Treatment."

Work this sheet with sheets #30, #32 and #33 of 123.

See sheet #27 of 123 for "Typical Stool Weld" detail.

DESIGNED	LSH
CHECKED	DJS
DRAWN	R. Doty
CHECKED	LSH DJS

June 26, 1997

CHANGED [signature] ENGINEER OF HIGHWAY DESIGN

PASSED [signature] ENGINEER OF BRIDGES AND STRUCTURES

EXPANSION JOINT
AT EAST ABUTMENT
F.A.P. RT. 315 SECTION 140B-I-4
FULTON AND MASON COUNTIES
STATION 10+646.69

STATE OF ILLINOIS
DEPARTMENT OF TRANSPORTATION

F.A.P. RT.	SECTION	COUNTY	TOTAL SHEETS	SHEET NO.
F.A.P. 315	140B-I-4	FULTON & MASON		52

SHEET NO. 32
123 SHEETS

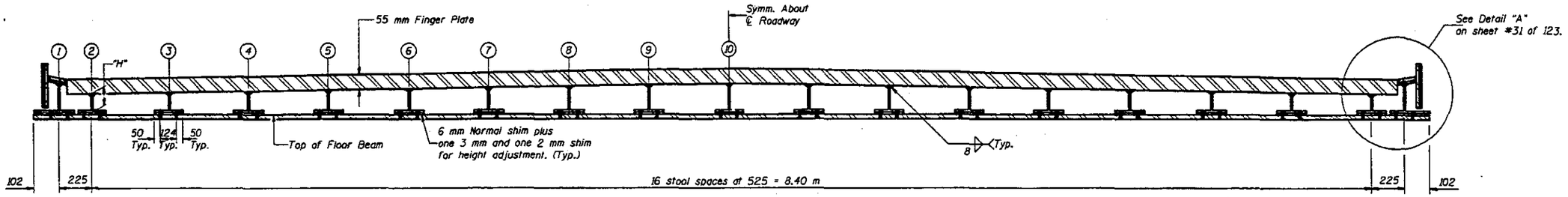

SECTION B-B

Vertical dimensions for stools varies. Dimensions in the table below are at ℄ of floor beam web and do not include any shim plates or normal shims.

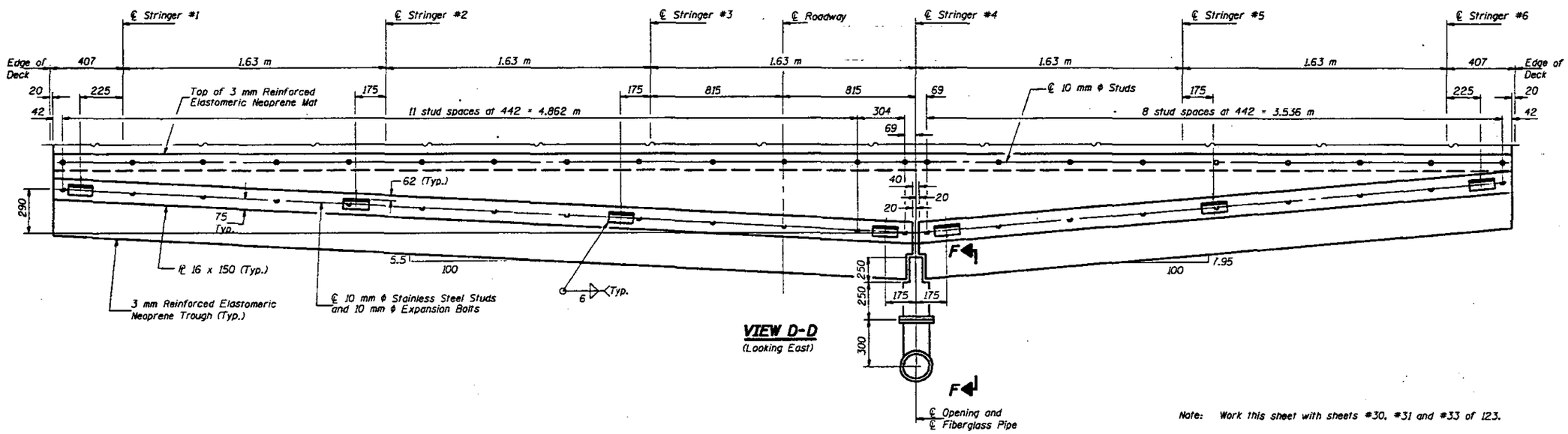

VIEW D-D
(Looking East)

Note: Work this sheet with sheets #30, #31 and #33 of 123.

* TABLE OF STOOL HEIGHTS "H"
(Dimensions are given at ℄ stool webs)

Location	Stool No.									
	1	2	3	4	5	6	7	8	9	10
"H" (mm)	153	130	138	146	153	161	169	177	184	192

* Dimensions shown do not include any shim plates or normal shims.

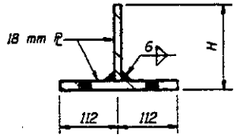

TYPICAL STOOL

DESIGNED	L S H
CHECKED	DJS
DRAWN	R. Doty
CHECKED	L S H DJS

June 26, 1997
EXAMINED Engineer of Bridge Design
PASSED Engineer of Bridges and Structures

EXPANSION JOINT AT EAST ABUTMENT
F.A.P. RT. 315 SECTION 140B-I-4
FULTON AND MASON COUNTIES
STATION 10+646.69

STATE OF ILLINOIS
DEPARTMENT OF TRANSPORTATION

F.A.P. 315	140B-I-4	FULTON & MASON		53

SHEET NO. 33
123 SHEETS

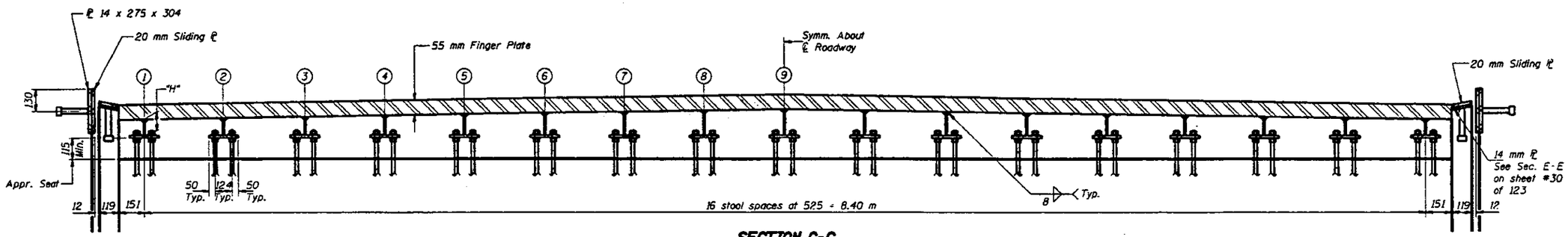

SECTION C-C

Vertical dimensions for stools varies. Dimensions shown are at front face of East Abut. backwall.

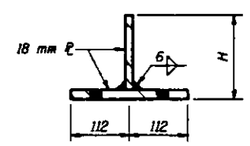

TYPICAL STOOL

* TABLE OF STOOL HEIGHTS "H"

(Dimensions are given at ℄ stool webs)

Location	Stool No.								
	1	2	3	4	5	6	7	8	9
"H" (mm)	110	118	126	133	141	149	157	164	172

* Dimensions shown do not include any shim plates or normal shims.

DESIGNED	LSH
CHECKED	DJS
DRAWN	R. Doty
CHECKED	LSH DJS

June 26, 1997

EXAMINED [signature] ENGINEER OF GENERAL DESIGN

PASSED [signature] ENGINEER OF BRIDGES AND STRUCTURES

Note: Work this sheet with sheets #30, #31 and #32 of 123.

EXPANSION JOINT
AT EAST ABUTMENT
F.A.P. RT. 315 SECTION 140B-I-4
FULTON AND MASON COUNTIES
STATION 10+646.69

STATE OF ILLINOIS
DEPARTMENT OF TRANSPORTATION

ROUTE NO.	SECTION	COUNTY	TOTAL SHEETS	SHEET NO.
F.A.P. 315	140B-1-4	FULTON & MASON		
FED. ROAD DIST. NO. 7	ILLINOIS	FED. AID PROJECT-		

SHEET NO. 34
123 SHEETS

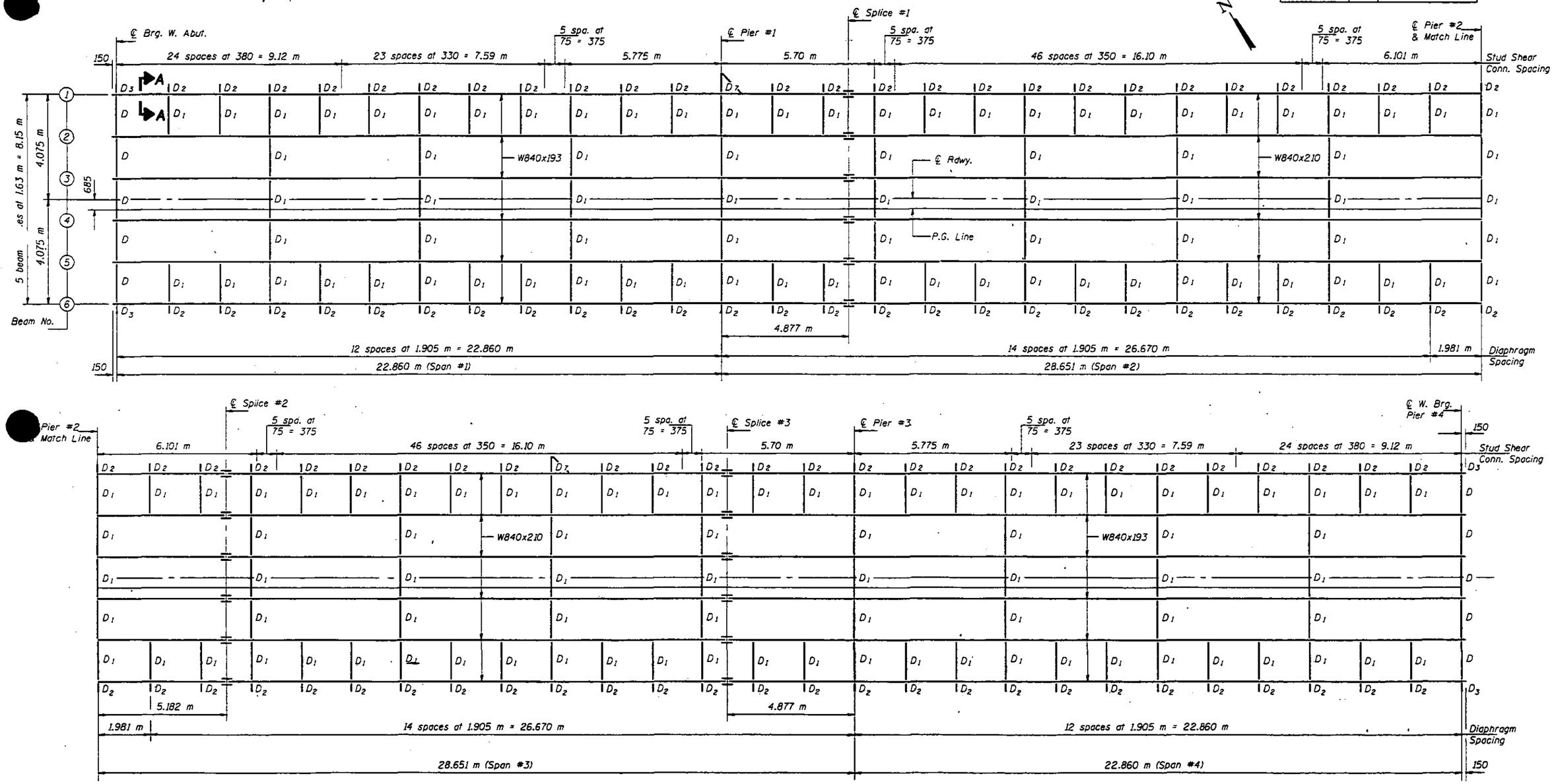

FRAMING PLAN

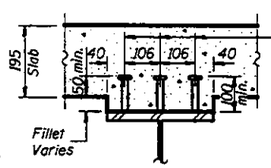

19 mm ϕ Granular or solid flux filled headed studs automatically end welded to flange. (3960 Required - Spans 1 thru 4)

SECTION A-A

Notes: All beams are AASHTO M 270M Grade 345 and shall meet Notch Toughness Requirements.
For remainder of structural steel details see sheet #35 of 123.
For Diaphragm D_7 see sheet #71 of 123.
Clip end of beams vertical at West Abutment. △1

DESIGNED	JLC
CHECKED	TTBB
DRAWN	R. Doty
CHECKED	JLC TTBB

June 26, 1997
EXAMINED — ENGINEER OF BRIDGE DESIGN
PASSED — ENGINEER OF BRIDGES AND STRUCTURES

STRUCTURAL STEEL
SPANS #1 THRU #4
F.A.P. RT. 315 SECTION 140B-1-4
FULTON AND MASON COUNTIES
STATION 10+646.69

△1 Revised 7-16-97 STD

projects\rad00012\0630002a.dgn Jul. 21, 1997 15:27:12

STATE OF ILLINOIS
DEPARTMENT OF TRANSPORTATION

F.A.P. NO.	SECTION	COUNTY	TOTAL SHEETS	SHEET NO.
F.A.P. 315	140B-I-4	FULTON & MASON		

SHEET NO. 35
123 SHEETS

INTERIOR BEAM MOMENT TABLE	0.4 Sp. 1	Pier #1	0.5 Sp. 2	Pier #2	0.5 Sp. 3	Pier #3	0.6 Sp. 4
Is (10^6 mm^4)	2780	2780	3110	3110	3110	2780	2780
Ic (n) (10^6 mm^4)	6780		7350		7350		6780
Ic (3n) (10^6 mm^4)	4950		5360		5360		4950
Ss (10^3 mm^3)	6620	6620	7350	7350	7350	6620	6620
Sc (n) (10^3 mm^3)	9360		10200		10200		9360
Sc (3n) (10^3 mm^3)	8440		9220		9220		8440
Z (10^3 mm^3)							
wℓ (kN/m)	9.91	12.26	10.07	12.42	10.07	12.26	9.91
Mℓ (kN·m)	359	778	353	842	353	778	359
sℓ (kN/m)	2.35		2.35		2.35		2.35
Msℓ (kN·m)	98		111		111		98
Mt (kN·m)	608	400	679	454	679	400	608
M (Imp) (kN·m)	152	95	155	104	155	95	152
$\frac{5}{3}$[Mt+M(Imp)] (kN·m)	1267	825	1390	930	1390	825	1267
Ma (kN·m)	2241	2084	2410	2304	2410	2084	2241
Mu (kN·m)							
fsℓ non-comp (MPa)	54	118	48	115	48	118	54
fsℓ (comp) (MPa)	12		12		12		12
fs$\frac{5}{3}$(t+Imp) (MPa)	135	125	136	127	136	125	135
fs (Overload) (MPa)	201	242	196	241	196	242	201
fs (Total) (MPa)	262	315	255	313	255	315	262
VR (kN)	182		190		190		182

INTERIOR BEAM REACTION TABLE	W. Abut.	Pier #1	Pier #2	Pier #3	Pier #4
Rℓ (kN)	106	350	360	350	106
Rt (kN)	134	190	200	190	134
Imp. (kN)	33	46	45	46	33
R (Total) (kN)	273	586	605	586	273

Is and Ss are the moment of inertia and section modulus of the steel section used in computing fs (Total & Overload).

Ic(n) and Sc(n) are the moment of inertia and section modulus of the composite section used in computing stresses due to Live Load.

Ic(3n) and Sc(3n) are the moment of inertia and section modulus of the composite section used in computing stresses due to superimposed dead loads. (see AASHTO 10.38)

VR is the maximum Live Load + Impact shear range in span.

Ma (Applied Moment)=1.3[Mℓ + Msℓ + $\frac{5}{3}$(Mt + M Imp)].

fs (Overload) is the sum of the stresses due to Mℓ + Msℓ + $\frac{5}{3}$(Mt + M Imp).

fs (Total) (Non-compact section) is the sum of the stresses due to 1.3[Mℓ + Msℓ + $\frac{5}{3}$(Mt + M Imp)].

TOP OF BEAM ELEVATIONS

LOCATION	Beam #1	Beam #2	Beam #3	Beam #4	Beam #5	Beam #6
℄ Brg. W. Abut.	138.852	138.876	138.901	138.901	138.876	138.852
℄ Brg. Pier #1	139.747	139.771	139.796	139.796	139.771	139.747
** ℄ Splice #1	139.938	139.962	139.987	139.987	139.962	139.938
℄ Brg. Pier #2	141.133	141.157	141.182	141.182	141.157	141.133
℄ Splice #2	141.393	141.417	141.442	141.442	141.417	141.393
** ℄ Splice #3	142.323	142.348	142.372	142.372	142.348	142.323
℄ Brg. Pier #3	142.571	142.596	142.620	142.620	142.596	142.571
℄ W. Brg. Pier #4	143.735	143.760	143.784	143.784	143.760	143.735

Top of Beam Elevations are given for fabrication only.
** Top of WB40x193.

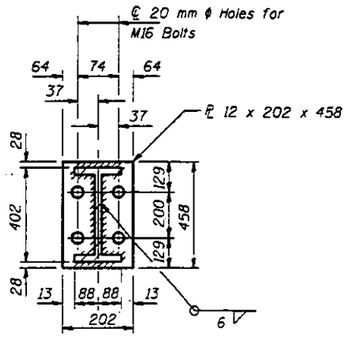

SECTION B-B

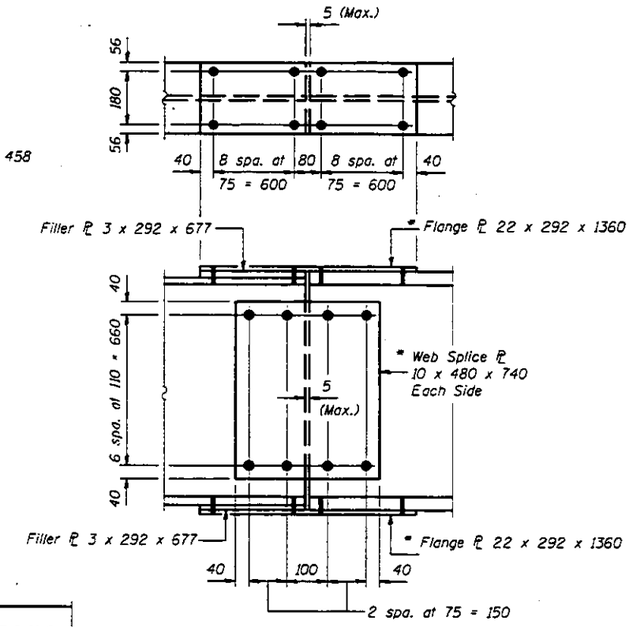

SPLICE #1 AND #3

(Use M22 H.S. Bolts)

* Indicates splice plates M 270M Grade 345 and plates to which Notch Toughness Requirements are applicable.

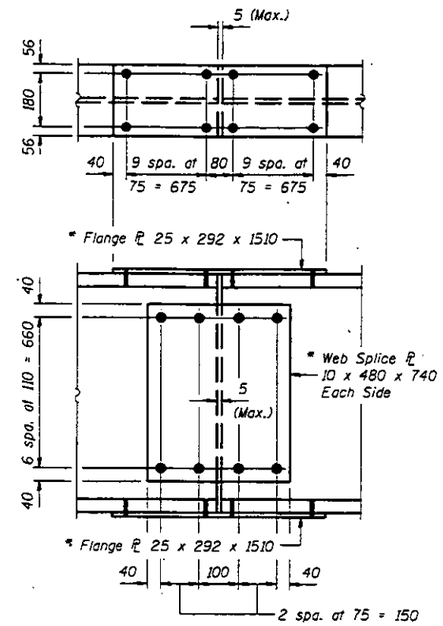

SPLICE #2

(Use M22 H.S. Bolts)

* Indicates splice plates M 270M Grade 345 and plates to which Notch Toughness Requirements are applicable.

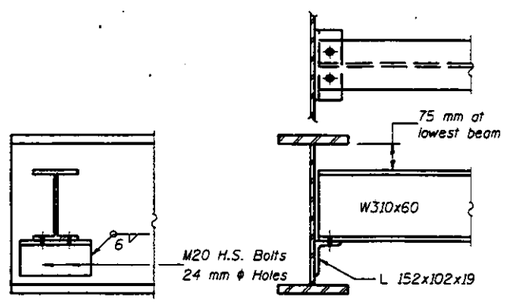

DIAPHRAGM D

(10 Required)

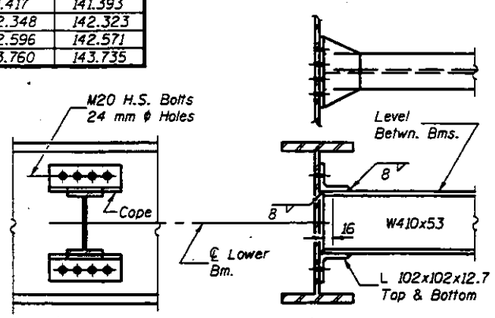

DIAPHRAGM D1

(157 Required)

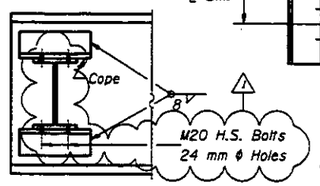

SECTION C-C

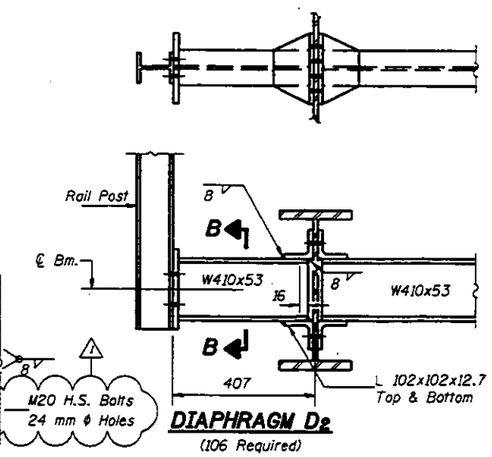

DIAPHRAGM D2

(106 Required)

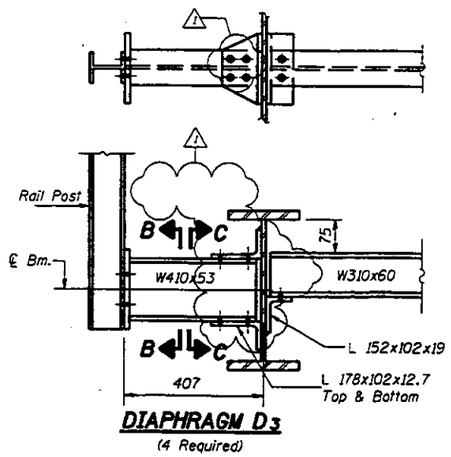

DIAPHRAGM D3

(4 Required)

Note: Two hardened washers shall be required over all oversized holes.

STRUCTURAL STEEL DETAILS
SPANS #1 THRU #4
F.A.P. RT. 315 SECTION 140B-I-4
FULTON AND MASON COUNTIES
STATION 10+646.69

DESIGNED	JLC
CHECKED	TTBB
DRAWN	R. Doty
CHECKED	JLC TTBB

June 26, 1997
EXAMINED Engineer of Bridge Design
PASSED Engineer of Bridges and Structures

△1 Revised 7-16-97 STD

projects\rad00012\0630002a.dgn Jul. 21, 1997 15:27:21

STATE OF ILLINOIS
DEPARTMENT OF TRANSPORTATION

F.A.P. NO.	SECTION	COUNTY	TOTAL SHEETS	SHEET NO.
F.A.P. 315	140B-I-4	FULTON & MASON	56	123 SHEETS

SHEET NO. 36

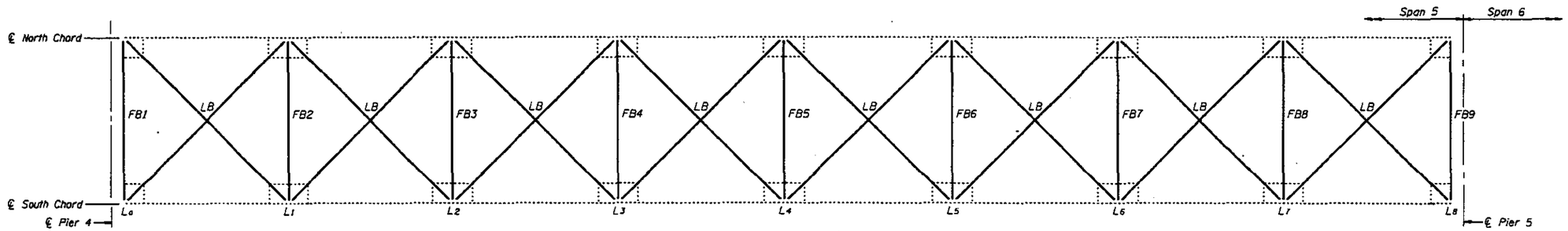

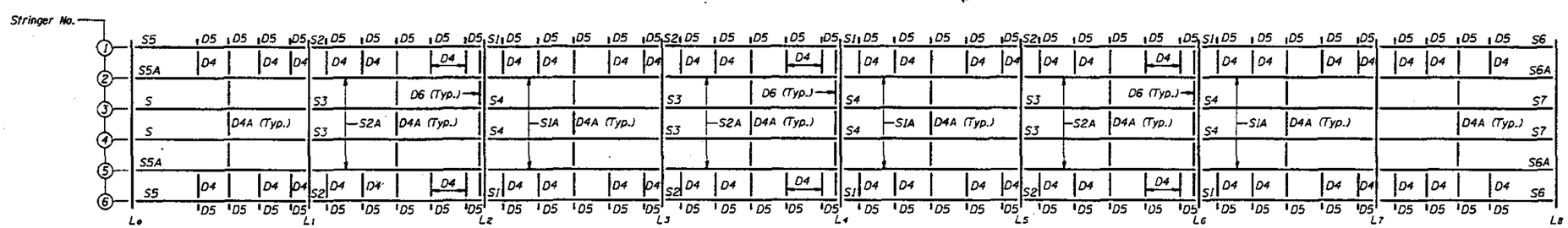

SPAN 5

Notes: FB indicates Floor Beam. See sheets #40 thru #44 of 123.
S indicates Stringer. See sheets #57 and #58 of 123.
D indicates Diaphragm. See sheet #70 of 123.
LB indicates Lateral Bracing. See sheet #69 of 123.
For diaphragm spacing see sheets #57 and #58 of 123.

DESIGNED	LSH
CHECKED	TTB
DRAWN	R. Doty
CHECKED	LSH TTB

June 26, 1997

EXAMINED Jorge L. Kasper
ENGINEER OF BRIDGE DESIGN

PASSED Ralph E. Anderson
ENGINEER OF BRIDGES AND STRUCTURES

FRAMING PLAN LOCATIONS
SPAN 5
F.A.P. RT. 315 SECTION 140B-I-4
FULTON AND MASON COUNTIES
STATION 10+646.69

F.A.P. NO.	SECTION	COUNTY	TOTAL SHEETS	SHEET NO.
F.A.P. 315	140B I-4	FULTON & MASON		57

SHEET NO. 37
123 SHEETS

STATE OF ILLINOIS
DEPARTMENT OF TRANSPORTATION

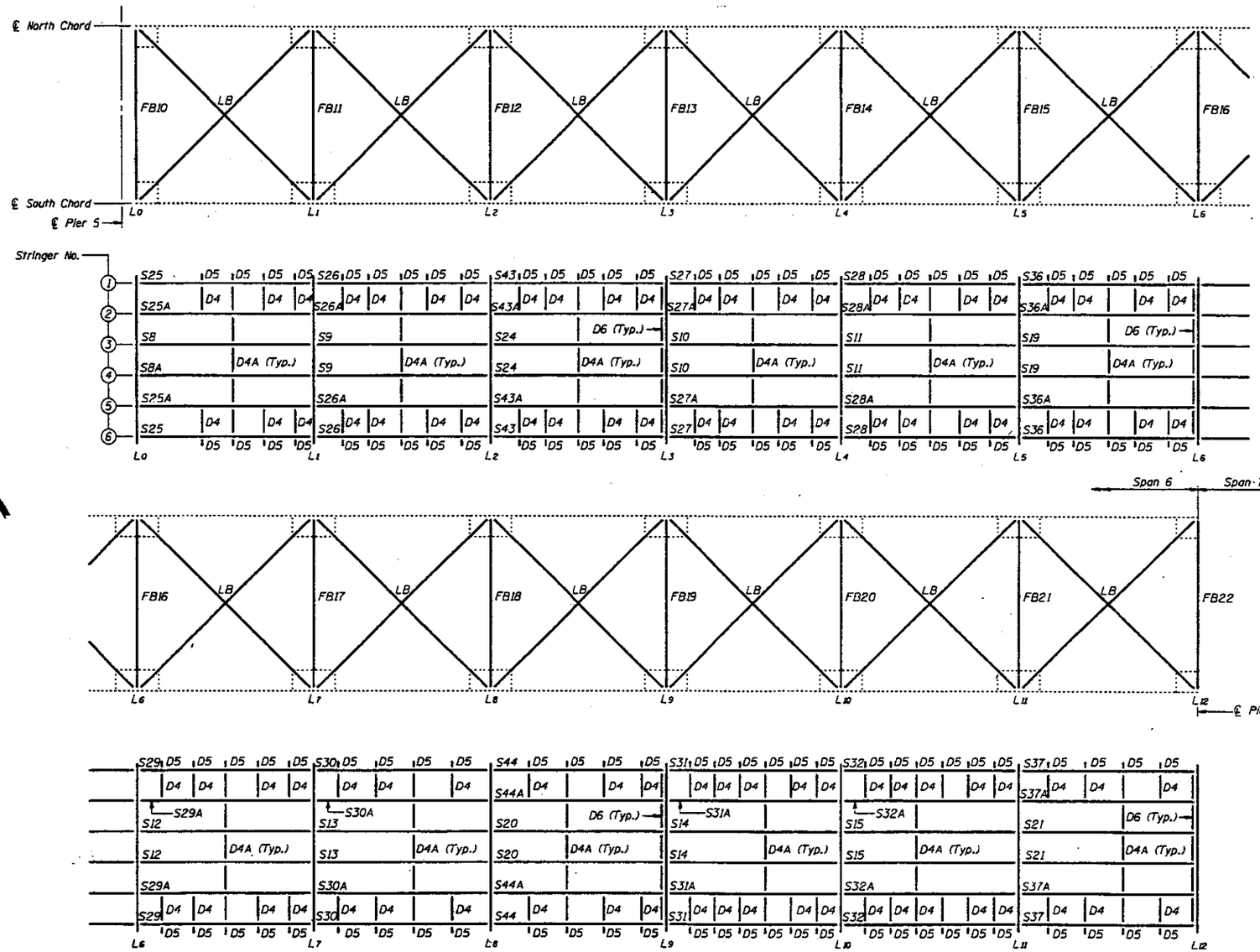

SPAN 6

DESIGNED	L SH
CHECKED	TTBD
DRAWN	R. Doty
CHECKED	L SH TTBD

June 26, 1997

EXAMINED ENGINEER OF BRIDGE DESIGN

PASSED ENGINEER OF BRIDGES AND STRUCTURES

Notes: FB indicates Floor Beam. See sheets #45 thru #48 of 123.
S indicates Stringer. See sheets #59 thru #68 of 123.
D indicates Diaphragm. See sheet #70 of 123.
LB indicates Lateral Bracing. See sheet #69 of 123.
For diaphragm spacing see sheets #59 thru #68 of 123.

FRAMING PLAN LOCATIONS
SPAN 6
F.A.P. RT. 315 SECTION 140B-I-4
FULTON AND MASON COUNTIES
STATION 10+646.69

STATE OF ILLINOIS
DEPARTMENT OF TRANSPORTATION

F.A.P. NO.	SECTION	COUNTY	TOTAL SHEETS	SHEET NO.
F.A.P. 315	140B-I-4	FULTON & MASON		58

SHEET NO. 38
123 SHEETS

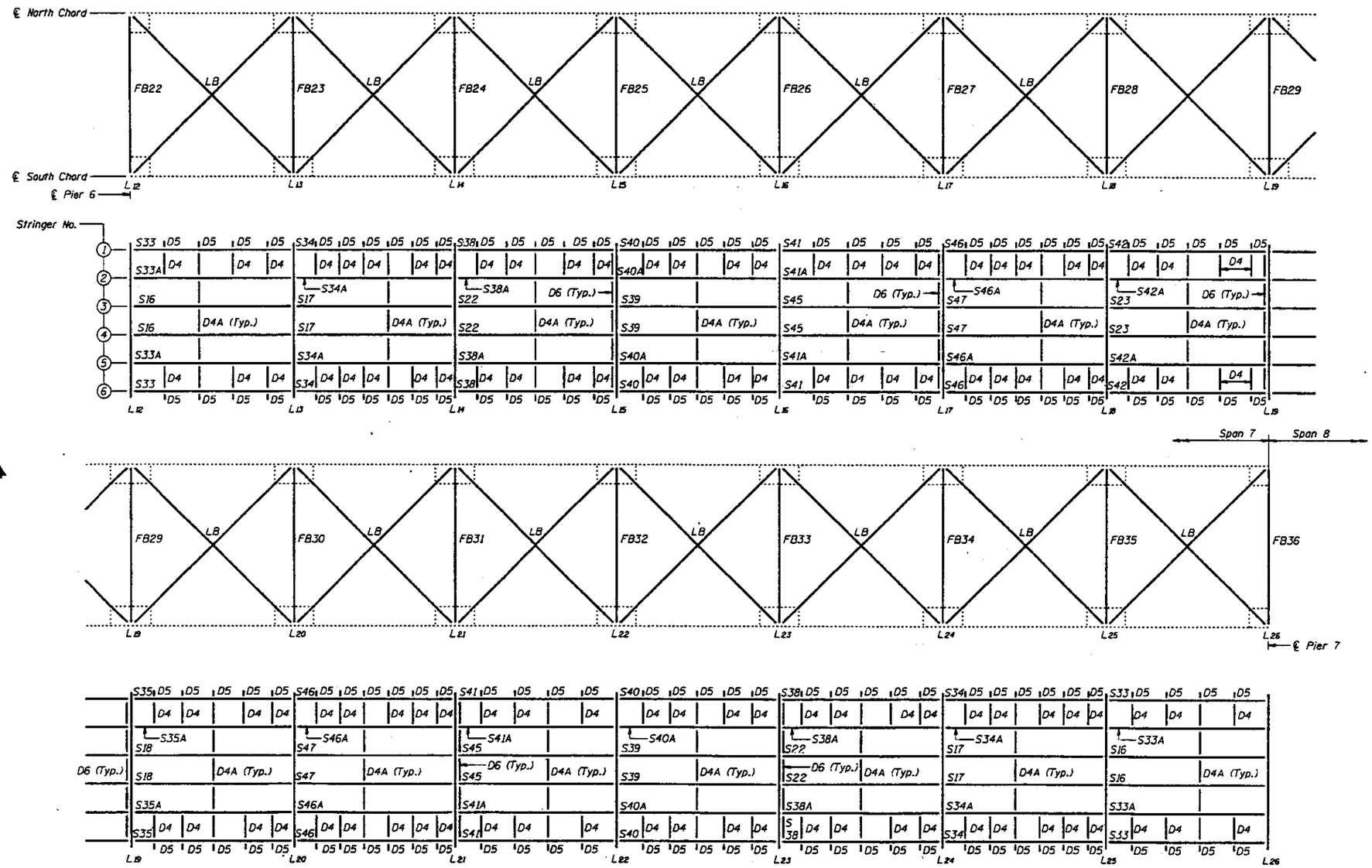

SPAN 7

DESIGNED	LSH
CHECKED	TTBB
DRAWN	R. Doty
CHECKED	LSH TTBB

June 26, 1997

EXAMINED Roger L. Kasper — ENGINEER OF BRIDGE DESIGN

PASSED Ralph E. Anderson — ENGINEER OF BRIDGES AND STRUCTURES

Notes: FB indicates Floor Beam. See sheets #48 thru #55 of 123.
S indicates Stringer. See sheets #59 thru #68 of 123.
D indicates Diaphragm. See sheet #70 of 123.
LB indicates Lateral Bracing. See sheet #69 of 123.
For diaphragm spacing see sheets #59 thru #68 of 123.

FRAMING PLAN LOCATIONS
SPAN 7
F.A.P. RT. 315 SECTION 140B-I-4
FULTON AND MASON COUNTIES
STATION 10+646.69

F.A.P. NO.	SECTION	COUNTY	TOTAL SHEETS	SHEET NO.
F.A.P. 315	140B-I.4	FULTON & MASON		59

SHEET NO. 39
123 SHEETS

STATE OF ILLINOIS
DEPARTMENT OF TRANSPORTATION

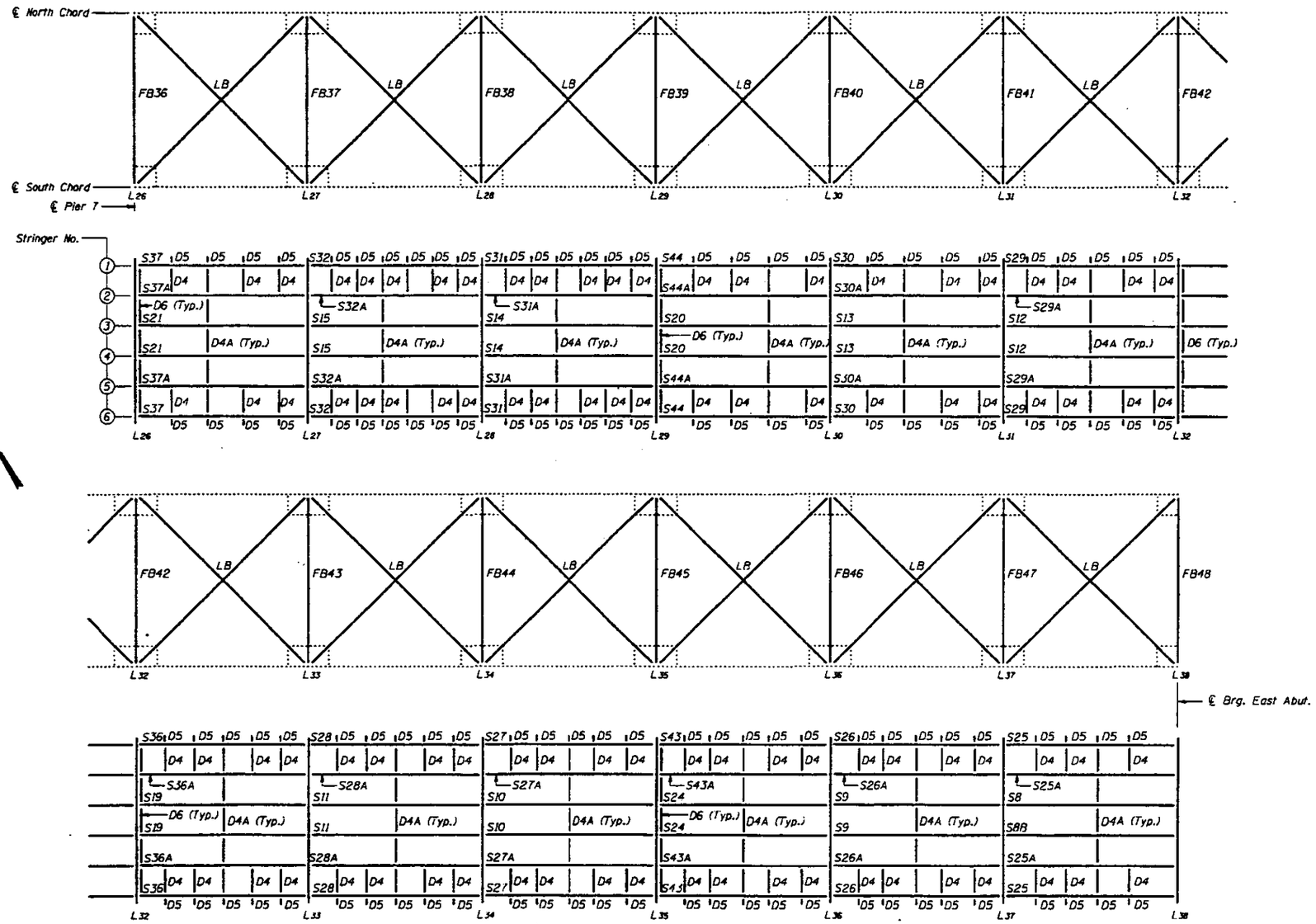

SPAN 8

DESIGNED	LSH
CHECKED	TTGB
DRAWN	R. Doty
CHECKED	LSH TTGB

June 26, 1997

DESIGNED Engineer of Highway Design
PASSED Engineer of Bridges and Structures

Notes: FB indicates Floor Beam. See sheets #46 thru #48 and #56 of 123.
S indicates Stringer. See sheets #59 thru #68 of 123.
D indicates Diaphragm. See sheet #70 of 123.
LB indicates Lateral Bracing. See sheet #69 of 123.
For diaphragm spacing see sheets #59 thru #68 of 123.

FRAMING PLAN LOCATIONS
SPAN 8
F.A.P. RT. 315 SECTION 140B-I-4
FULTON AND MASON COUNTIES
STATION 10+646.69

4:27 7,135 SF/FT

STATE OF ILLINOIS
DEPARTMENT OF TRANSPORTATION

HIGHWAY NO.	SECTION	COUNTY	TOTAL SHEETS	SHEET NO.
F.A.P. 315	140B-I-4	FULTON & MASON		
FED. ROAD DIST. NO. 7	ILLINOIS	FED. AID PROJECT-		

SHEET NO. 40
123 SHEETS

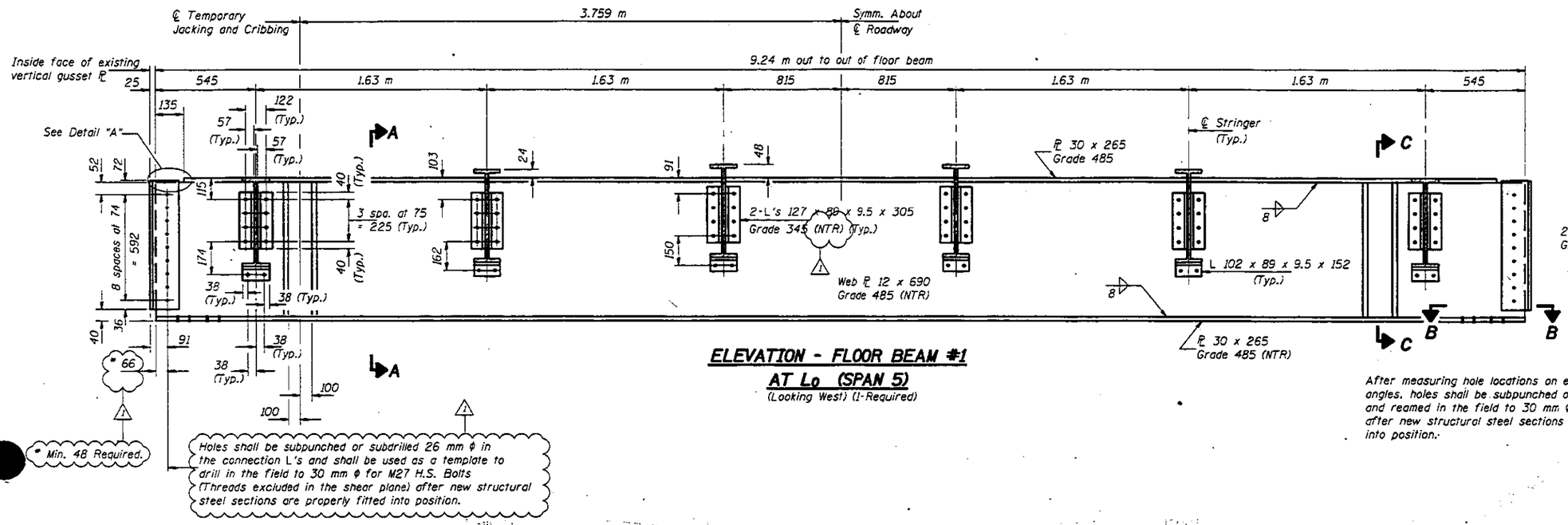

ELEVATION - FLOOR BEAM #1
AT Lo (SPAN 5)
(Looking West) (1-Required)

* Min. 48 Required.

Holes shall be subpunched or subdrilled 26 mm ϕ in the connection L's and shall be used as a template to drill in the field to 30 mm ϕ for M27 H.S. Bolts (Threads excluded in the shear plane) after new structural steel sections are properly fitted into position.

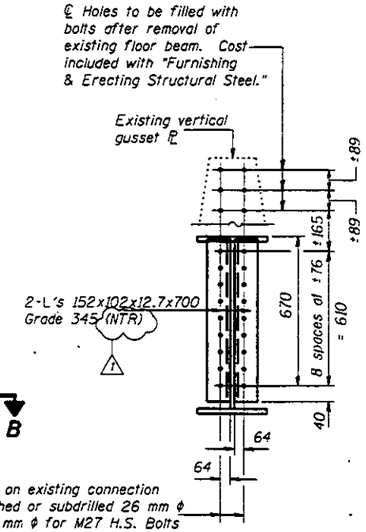

After measuring hole locations on existing connection angles, holes shall be subpunched or subdrilled 26 mm ϕ and reamed in the field to 30 mm ϕ for M27 H.S. Bolts after new structural steel sections are properly fitted into position.

END VIEW

Notes: "NTR" denotes material to which Notch Toughness Requirements are applicable.
To facilitate field erection, floor beam lengths are 50 (25 each end) shorter than those taken from existing fabrication plans.
Work this sheet with sheet #38 of 123.

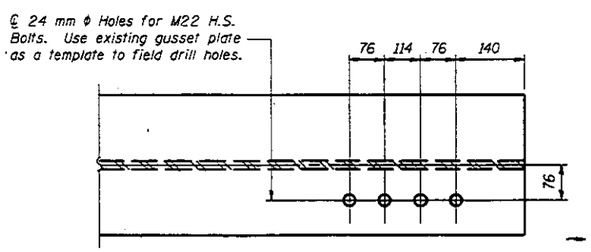

SECTION B-B
(Typical Each End)

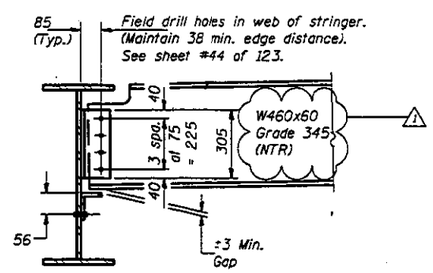

SECTION A-A
(Looking North)

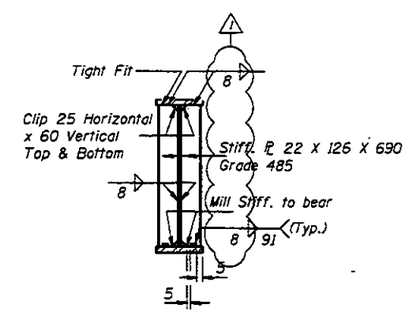

SECTION C-C
See sheet #55 of 123.

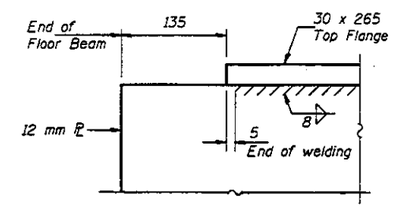

DETAIL "A"

DESIGNED	LSH
CHECKED	JLC TTBB
DRAWN	R. Doty
CHECKED	LSH TTBB

June 26, 1997
EXAMINED Jorge O. Kapur — ENGINEER OF GENERAL DESIGN
PASSED Ralph E. Anderson — ENGINEER OF BRIDGES AND STRUCTURES

FLOOR BEAM DETAILS
SPAN 5
F.A.P. RT. 315 SECTION 140B-I-4
FULTON AND MASON COUNTIES
STATION 10+646.69

Revised 7-16-97 STD

projects\rad00012\0630002b.dgn Jul. 21, 1997 15:32:01

STATE OF ILLINOIS
DEPARTMENT OF TRANSPORTATION

ROUTE NO.	SECTION	COUNTY	TOTAL SHEETS	SHEET NO.
F.A.P. 315	140B-1-4	FULTON & MASON		
FED. ROAD DIST. NO. 7		ILLINOIS	FED. AID PROJECT-	

SHEET NO. 41
123 SHEETS

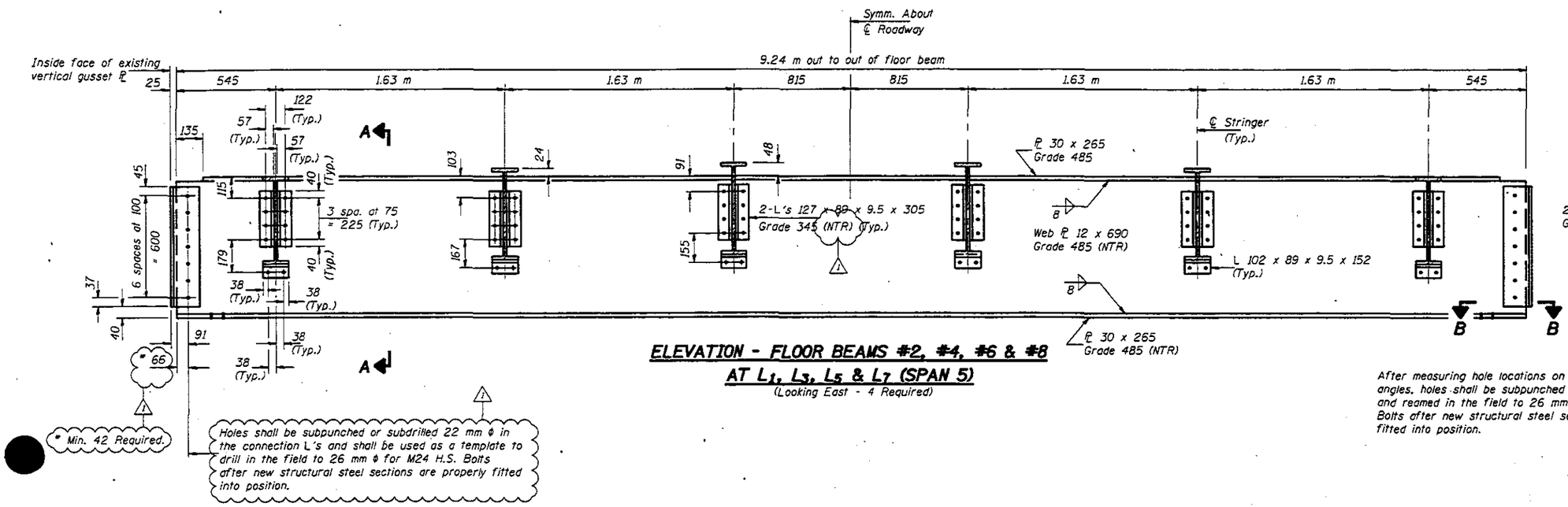

ELEVATION - FLOOR BEAMS #2, #4, #6 & #8
AT L_1, L_3, L_5 & L_7 (SPAN 5)
(Looking East - 4 Required)

* Min. 42 Required.

Holes shall be subpunched or subdrilled 22 mm ϕ in the connection L's and shall be used as a template to drill in the field to 26 mm ϕ for M24 H.S. Bolts after new structural steel sections are properly fitted into position.

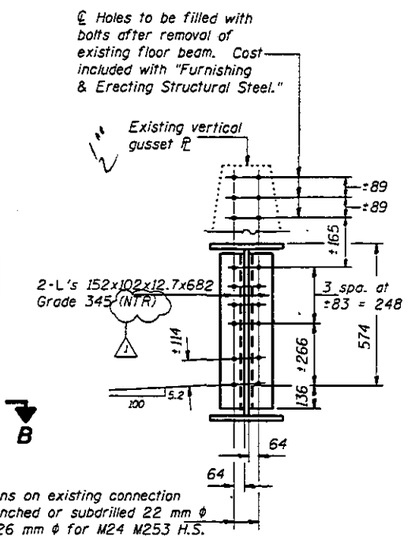

After measuring hole locations on existing connection angles, holes shall be subpunched or subdrilled 22 mm ϕ and reamed in the field to 26 mm ϕ for M24 M253 H.S. Bolts after new structural steel sections are properly fitted into position.

SOUTH END VIEW
(North End View Opposite Hand)

Notes: "NTR" denotes material to which Notch Toughness Requirements are applicable.
To facilitate field erection, floor beam lengths are 50 (25 each end) shorter than those taken from existing fabrication plans.
Work this sheet with sheet #36 of 123.

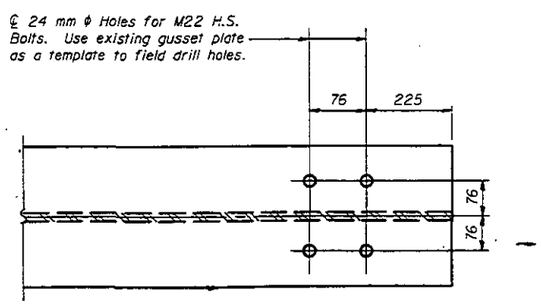

SECTION B-B
(Typical Each End)

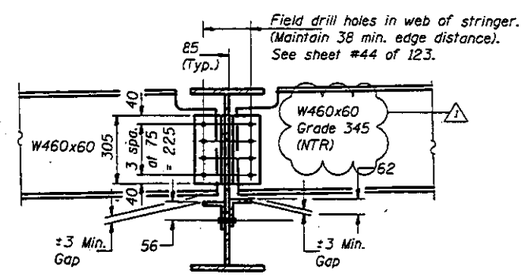

SECTION A-A
(Looking North)

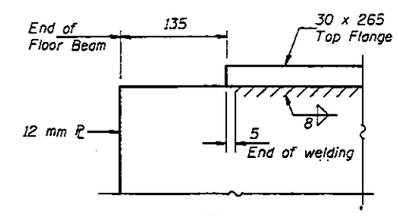

DETAIL "A"

DESIGNED	LSH
CHECKED	JLC TTBB
DRAWN	R. Doty
CHECKED	LSH TTBB

June 26, 1997
EXAMINED [signature] ENGINEER OF BRIDGE DESIGN
PASSED [signature] ENGINEER OF BRIDGES AND STRUCTURES

FLOOR BEAM DETAILS
SPAN 5
F.A.P. RT. 315 SECTION 140B-I-4
FULTON AND MASON COUNTIES
STATION 10+646.69

1 Revised 7-16-97 STD

\projects\rad00012\0630002b.dgn Jul. 21, 1997 15:31:52

STATE OF ILLINOIS
DEPARTMENT OF TRANSPORTATION

ROUTE NO.	SECTION	COUNTY	TOTAL SHEETS	SHEET NO.
F.A.P. 315	140B-I-4	FULTON & MASON		
FED. ROAD DIST. NO. 7	ILLINOIS	FED. AID PROJECT-		

SHEET NO. 42
123 SHEETS

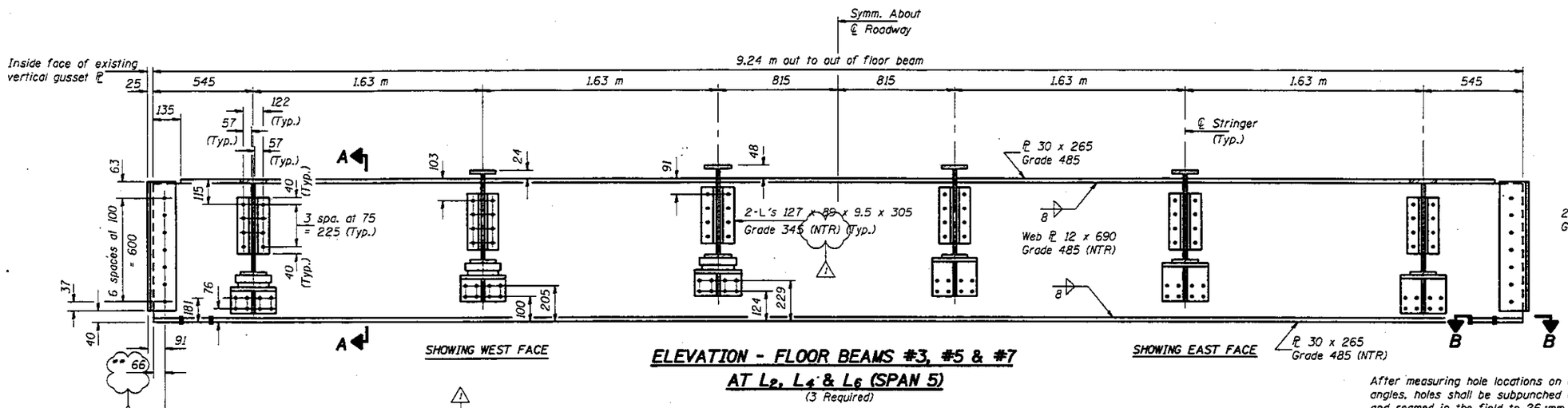

ELEVATION - FLOOR BEAMS #3, #5 & #7
AT L_2, L_4 & L_6 (SPAN 5)
(3 Required)

Holes shall be subpunched or subdrilled 22 mm ϕ in the connection L's and shall be used as a template to drill in the field to 26 mm ϕ for M24 H.S. Bolts after new structural steel sections are properly fitted into position.

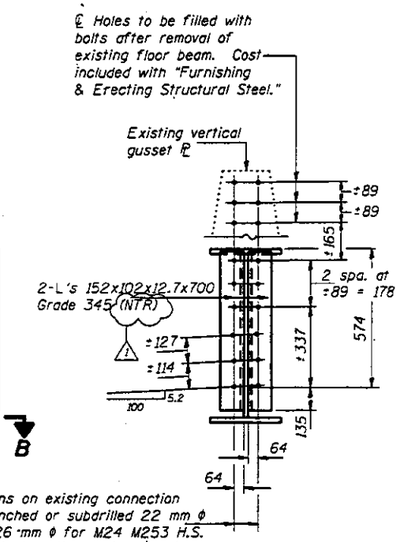

After measuring hole locations on existing connection angles, holes shall be subpunched or subdrilled 22 mm ϕ and reamed in the field to 26 mm ϕ for M24 M253 H.S. Bolts after new structural steel sections are properly fitted into position.

SOUTH END VIEW
(North End View Opposite Hand)

Notes: "NTR" denotes material to which Notch Toughness Requirements are applicable.
To facilitate field erection, floor beam lengths are 50 (25 each end) shorter than those taken from existing fabrication plans.
Work this sheet with sheet #36 of 123.

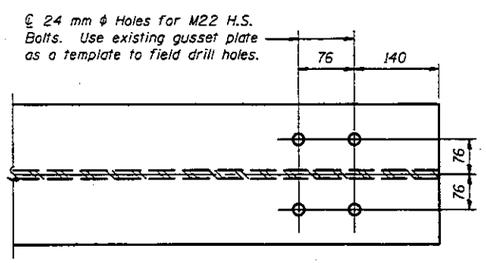

SECTION B-B
(Typical Each End)

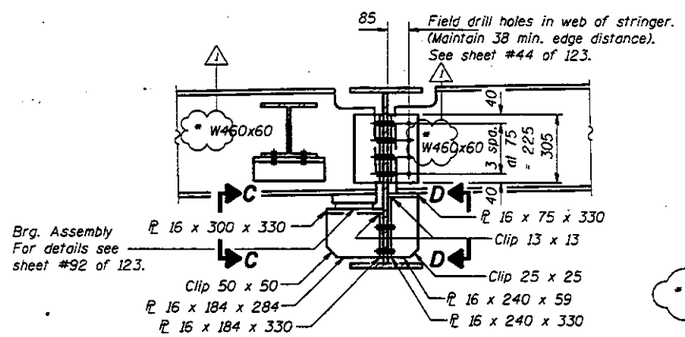

SECTION A-A
(Looking North)

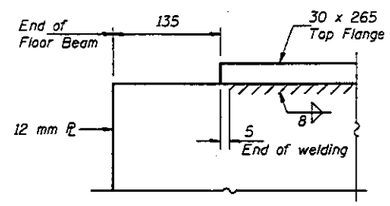

DETAIL "A"

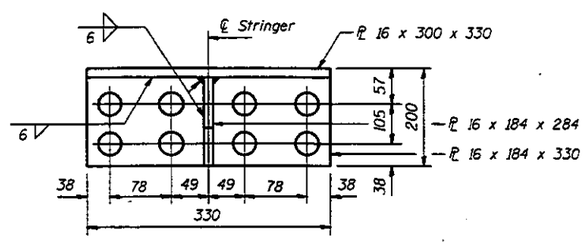

VIEW C-C
(6 Required Each Floor Beam)

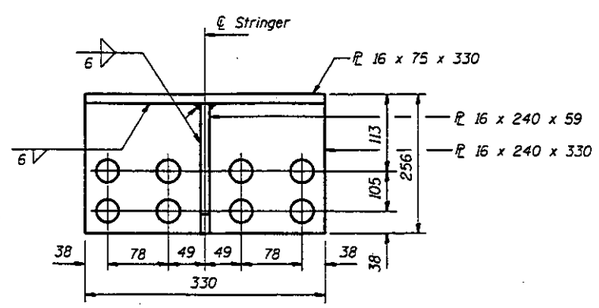

VIEW D-D
(6 Required Each Floor Beam)

SIGNED	LSH
CHECKED	JLC TTBB
DRAWN	R. Doty
CHECKED	LSH TTBB

June 26, 1997
EXAMINED — ENGINEER OF BRIDGE DESIGN
PASSED — ENGINEER OF BRIDGES AND STRUCTURES

FLOOR BEAM DETAILS
SPAN 5
F.A.P. RT. 315 SECTION 140B-I-4
FULTON AND MASON COUNTIES
STATION 10+646.69

Revised 7-16-97 STD

\projects\rad00012\0630002b.dgn Jul. 21, 1997 15:31:43

STATE OF ILLINOIS
DEPARTMENT OF TRANSPORTATION

F.A.P. 315	140B-1-4	FULTON & MASON		62

SHEET NO. 42
123 SHEETS

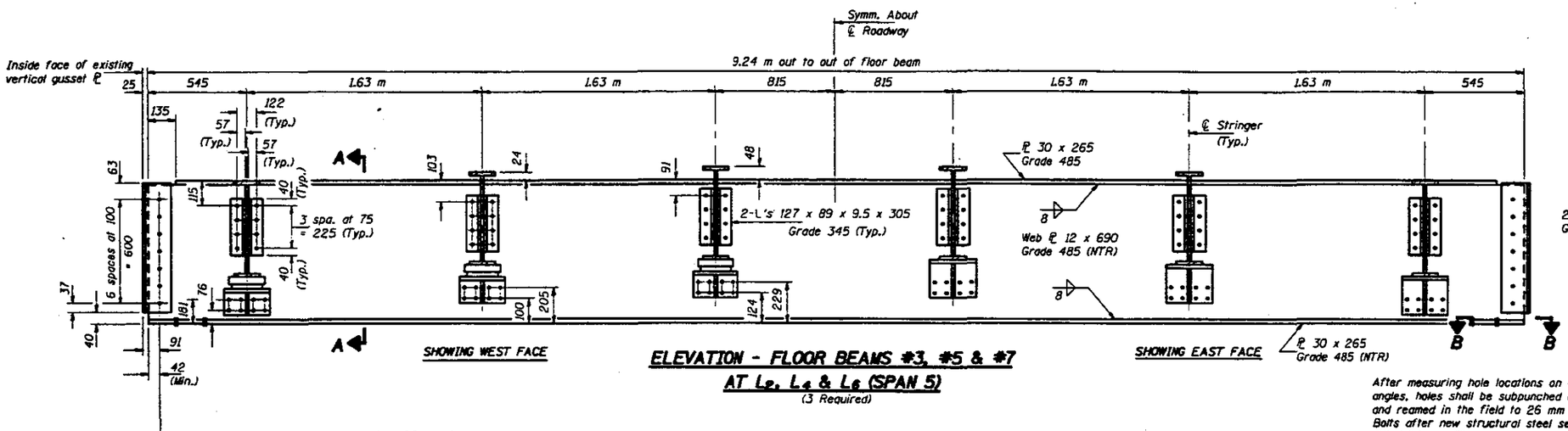

ELEVATION - FLOOR BEAMS #3, #5 & #7 AT L_2, L_4 & L_6 (SPAN 5)

(3 Required)

Holes shall be subpunched or subdrilled 22 mm ϕ and reamed in the field to 26 mm ϕ for M24 H.S. Bolts after new structural steel sections are properly fitted into position.

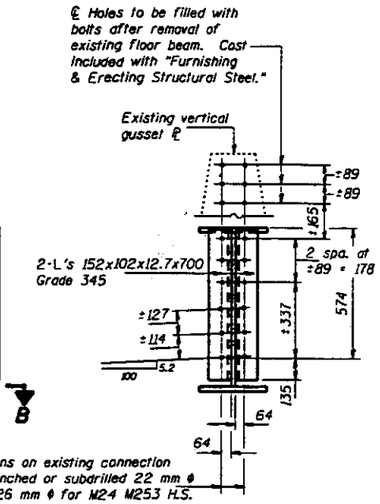

After measuring hole locations on existing connection angles, holes shall be subpunched or subdrilled 22 mm ϕ and reamed in the field to 26 mm ϕ for M24 M253 H.S. Bolts after new structural steel sections are properly fitted into position.

SOUTH END VIEW

(North End View Opposite Hand)

Notes: "NTR" denotes material to which Notch Toughness Requirements are applicable. To facilitate field erection, floor beam lengths are 50 (25 each end) shorter than those taken from existing fabrication plans. Work this sheet with sheet #36 of 123.

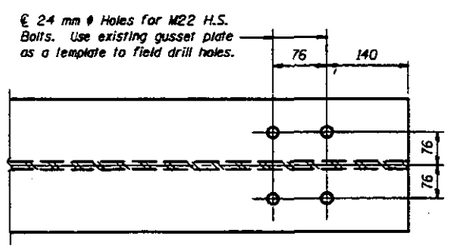

SECTION B-B

(Typical Each End)

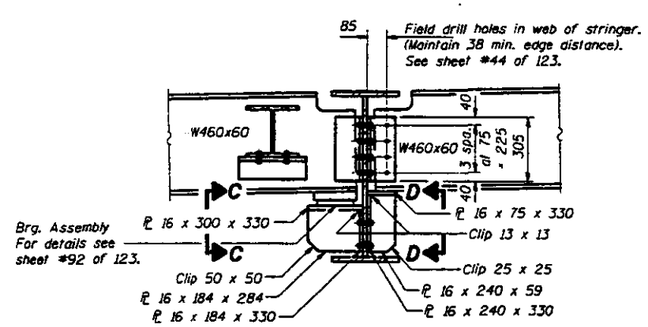

SECTION A-A

(Looking North)

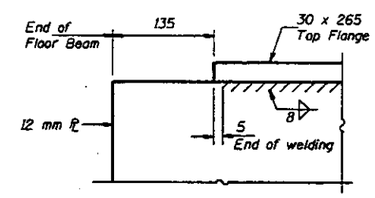

DETAIL "A"

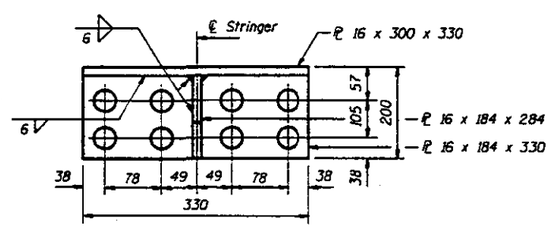

VIEW C-C

(6 Required Each Floor Beam)

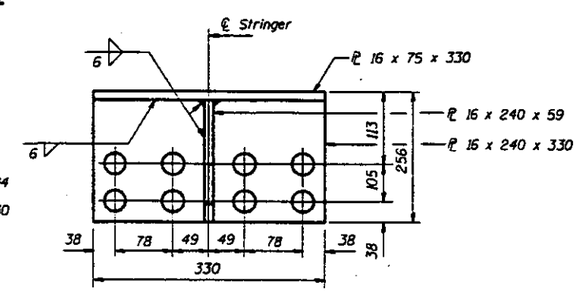

VIEW D-D

(6 Required Each Floor Beam)

DESIGNED	LSH
CHECKED	JLC TTB
DRAWN	R. Doty
CHECKED	LSH TTB

June 26, 1997

ENGINEER OF STRUCTURAL DESIGN

ENGINEER OF BRIDGES AND STRUCTURES

VOID

FLOOR BEAM DETAILS SPAN 5

F.A.P. RT. 315 SECTION 140B-1-4
FULTON AND MASON COUNTIES
STATION 10+646.69

STATE OF ILLINOIS
DEPARTMENT OF TRANSPORTATION

ROUTE NO.	SECTION	COUNTY	TOTAL SHEETS	SHEET NO.
F.A.P. 315	140B-I-4	FULTON & MASON		
FED. ROAD DIST. NO. 7	ILLINOIS			

SHEET NO. 43
123 SHEETS

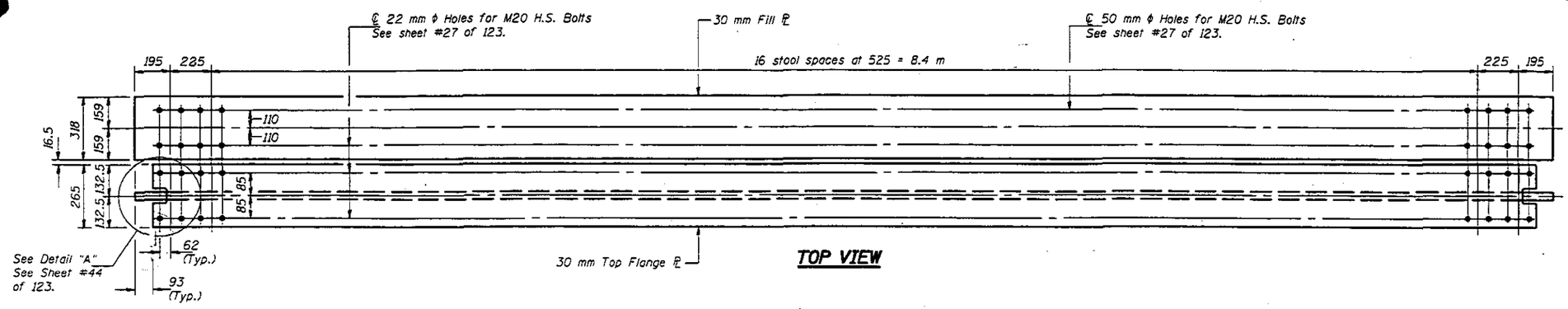

TOP VIEW

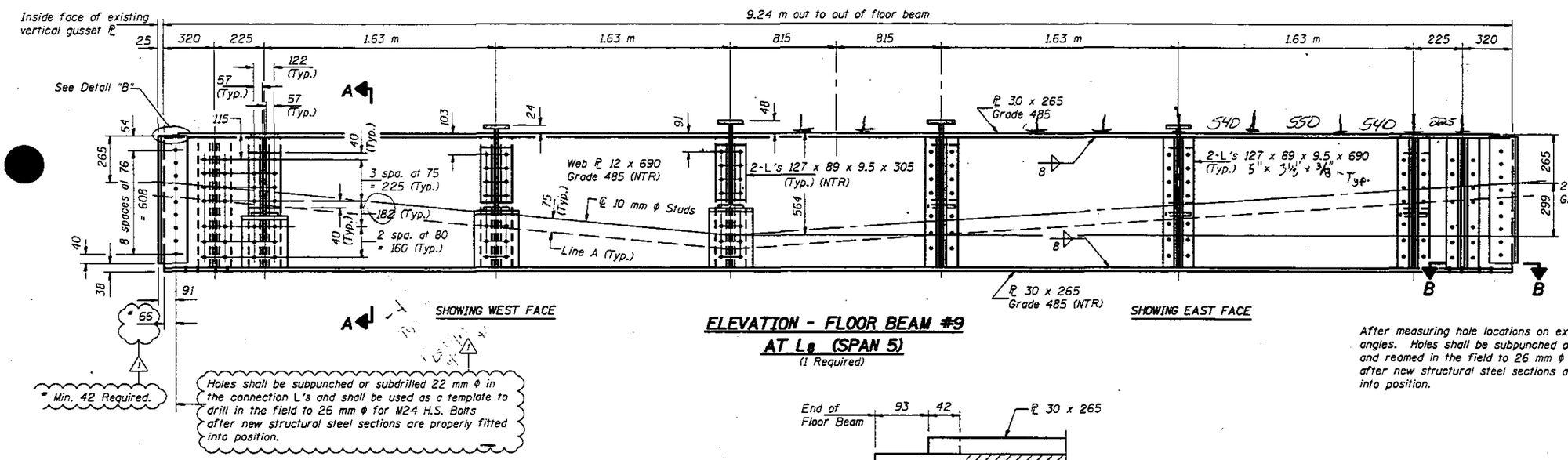

ELEVATION - FLOOR BEAM #9
AT L_8 (SPAN 5)
(1 Required)

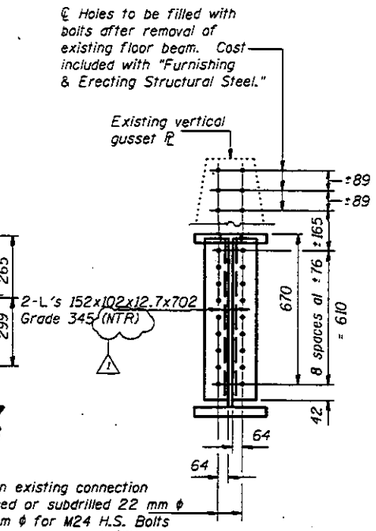

END VIEW

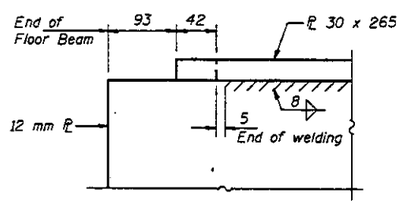

DETAIL "B"

Notes: "NTR" denotes material to which Notch Toughness Requirements are applicable.
To facilitate field erection, floor beam lengths are 50 (25 each end) shorter than those taken from existing fabrication plans.
Work this sheet with sheets #36 and #44 of 123.
For Detail "A" see sheet #44 of 123.

DESIGNED	LSH
CHECKED	JLC TTBB
DRAWN	R. Doty
CHECKED	LSH TTBB

June 26, 1997
EXAMINED Greg J. Hagen — ENGINEER OF BRIDGE DESIGN
PASSED Ralph E. Anderson — ENGINEER OF BRIDGES AND STRUCTURES

FLOOR BEAM DETAILS
SPAN 5
F.A.P. RT. 315 SECTION 140B-I-4
FULTON AND MASON COUNTIES
STATION 10+646.69

Revised 7-16-97 STD

STATE OF ILLINOIS
DEPARTMENT OF TRANSPORTATION

ROUTE NO.	SECTION	COUNTY	TOTAL SHEETS	SHEET NO.
F.A.P. 315	140B-I-4	FULTON & MASON		
FED. ROAD DIST. NO. 7	ILLINOIS			

SHEET NO. 44
123 SHEETS

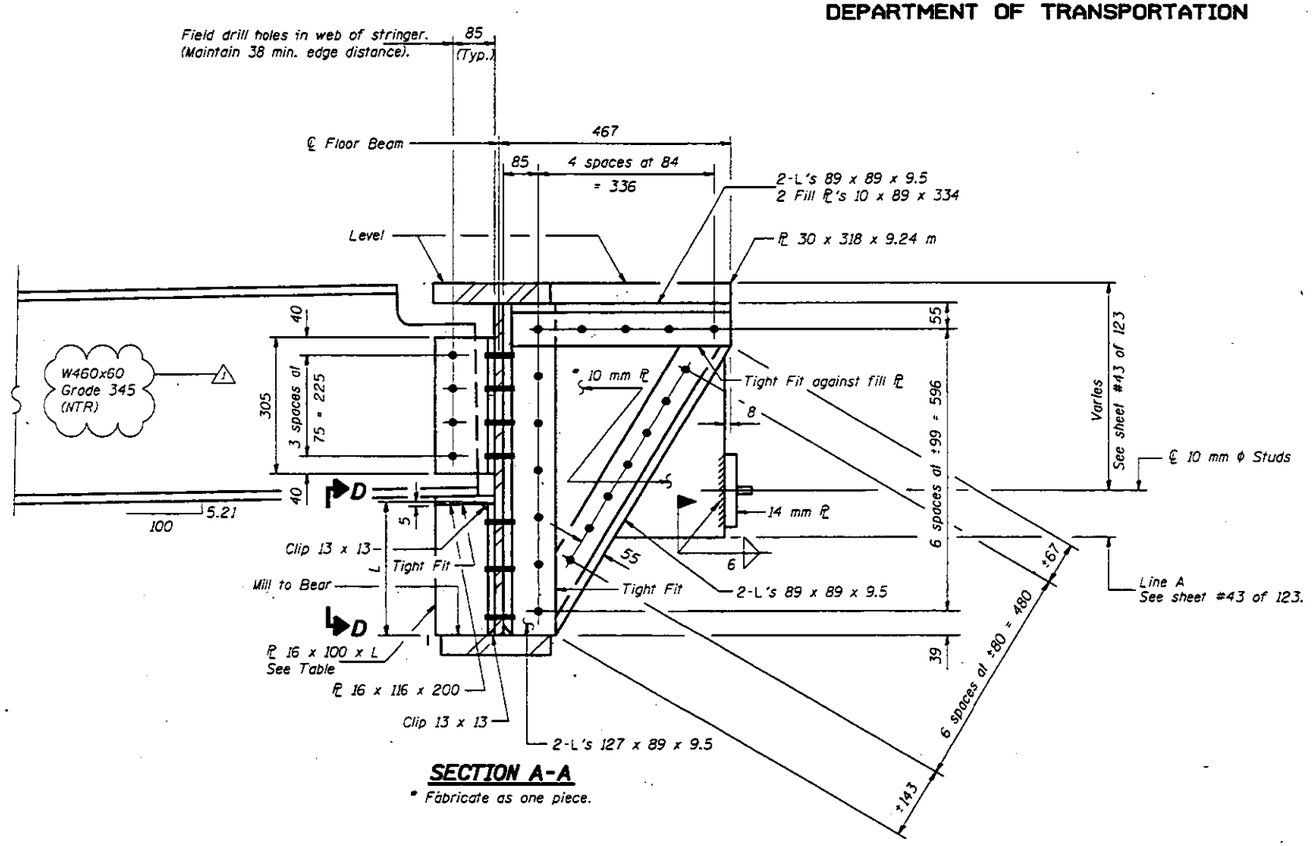

SECTION A-A

* Fabricate as one piece.

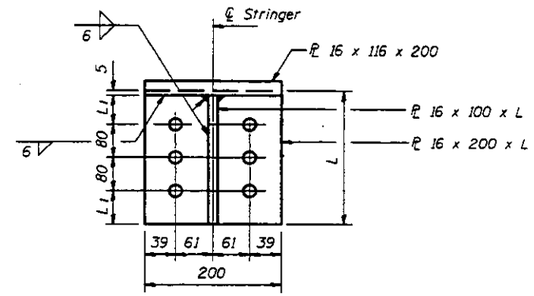

VIEW D-D

(6 Required)

TABLE OF L & L1 DIMENSIONS

Location	L (mm)	L1 (mm)
Exterior Stringer	249	42
1st Interior Stringer	273	54
Interior Stringer	297	66

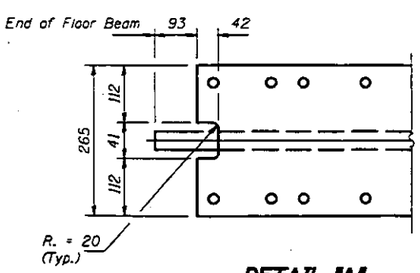

DETAIL "A"

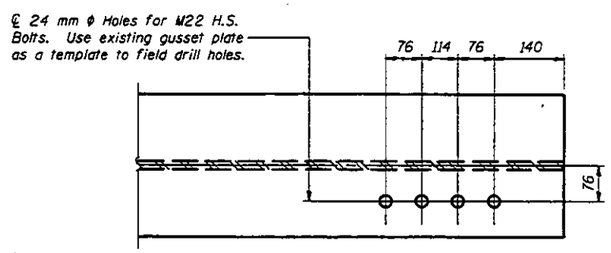

SECTION B-B

(Typical Each End)

DESIGNED	LSH
CHECKED	DJS
DRAWN	R. Doty
CHECKED	LSH DJS TTB

June 26, 1997

EXAMINED Engineer of Bridge Design

PASSED Engineer of Bridges and Structures

FLOOR BEAM #9 DETAILS
SPAN 5
F.A.P. RT. 315 SECTION 140B-I-4
FULTON AND MASON COUNTIES
STATION 10+646.69

1 Revised 7-16-97 STD

STATE OF ILLINOIS
DEPARTMENT OF TRANSPORTATION

ROUTE NO.	SECTION	COUNTY	TOTAL SHEETS	SHEET NO.
F.A.P. 315	140B-I-4	FULTON & MASON		
PROJECT REF. NO. 7		ILLINOIS	PROJECT NO.	

SHEET NO. 45
123 SHEETS

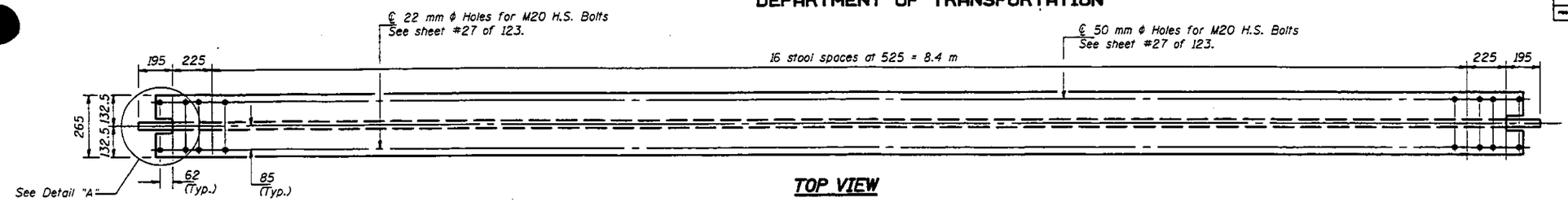

TOP VIEW

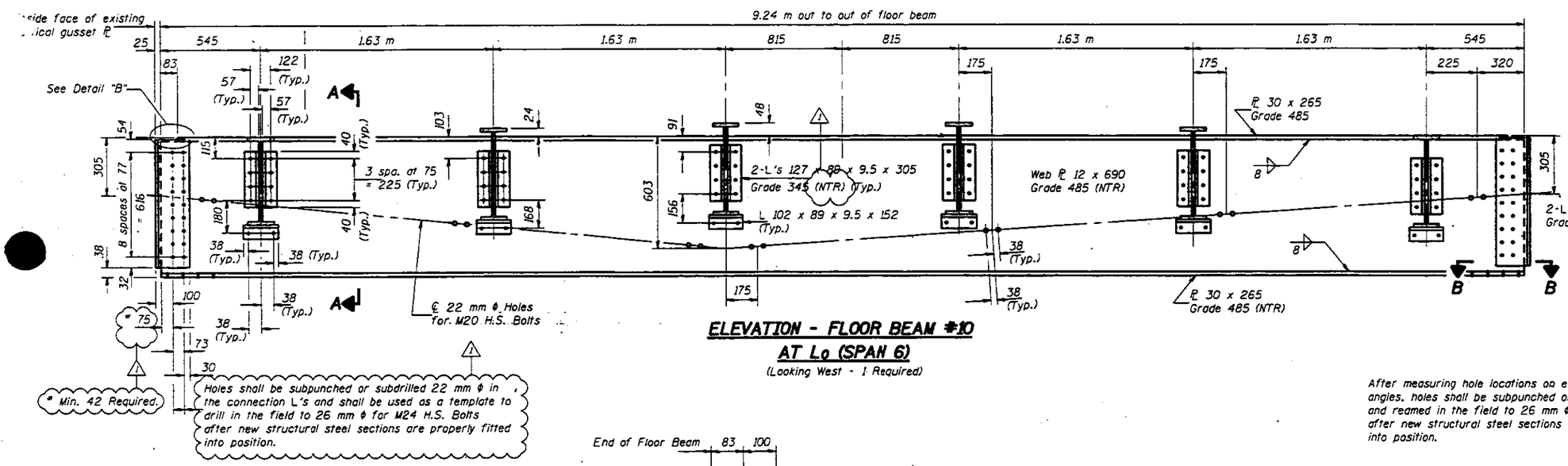

ELEVATION - FLOOR BEAM #10
AT L0 (SPAN 6)
(Looking West - 1 Required)

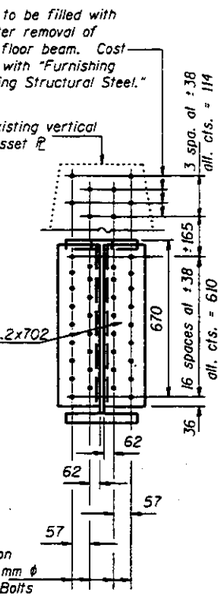

After measuring hole locations on existing connection angles, holes shall be subpunched or subdrilled 22 mm ϕ and reamed in the field to 26 mm ϕ for M24 H.S. Bolts after new structural steel sections are properly fitted into position.

END VIEW

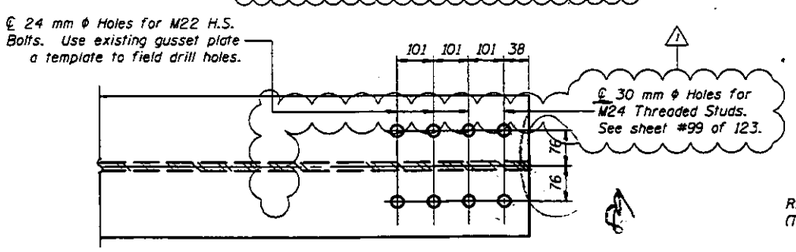

SECTION B-B
(Typical Each End)

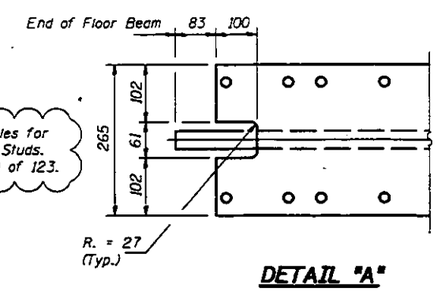

DETAIL "A"

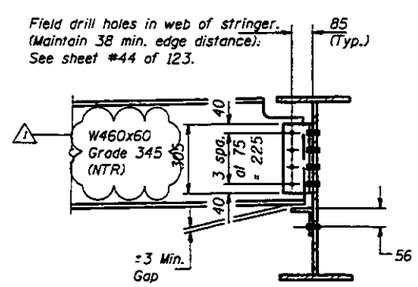

SECTION A-A

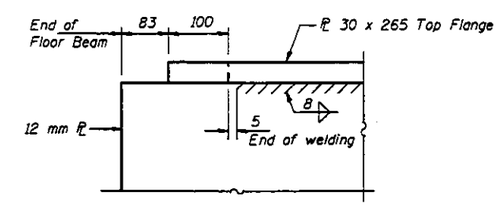

DETAIL "B"

DESIGNED	LSH
CHECKED	JLC TTB
DRAWN	R. Doty
CHECKED	LSH TTB

June 26, 1997
EXAMINED Greg J. Harper ENGINEER OF BRIDGE DESIGN
PASSED Ralph E. Anderson ENGINEER OF BRIDGES AND STRUCTURES

Notes: "NTR" denotes material to which Notch Toughness Requirements are applicable.
To facilitate field erection, floor beam lengths are 50 (25 each end) shorter than those taken from existing fabrication plans.
Work this sheet with sheet #37 of 123.

FLOOR BEAM DETAILS
SPAN 6
F.A.P. RT. 315 SECTION 140B-I-4
FULTON AND MASON COUNTIES
STATION 10+646.69

1 Revised 7-16-97 STD

STATE OF ILLINOIS
DEPARTMENT OF TRANSPORTATION

ROUTE NO.	SECTION	COUNTY	TOTAL SHEETS	SHEET NO.
F.A.P. 315	140B-1-4	FULTON & MASON		
FED. ROAD DIST. NO. 7	ILLINOIS	FED. AID PROJECT-		

SHEET NO. 46
123 SHEETS

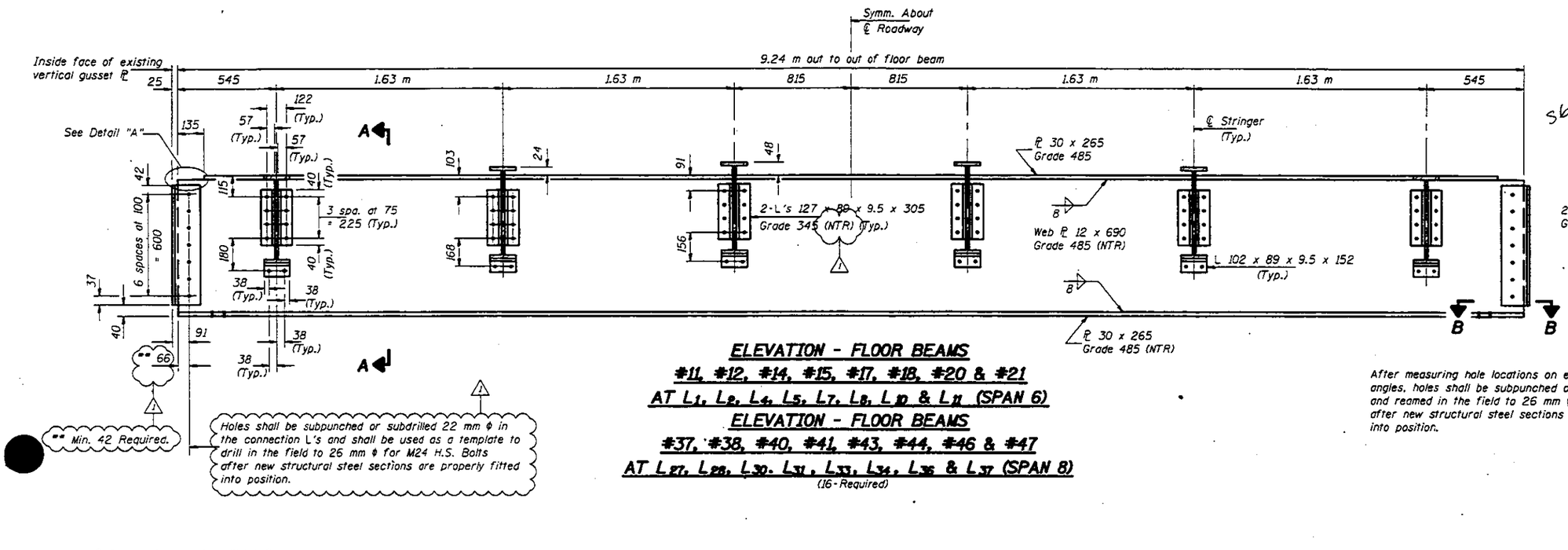

Holes shall be subpunched or subdrilled 22 mm ϕ in the connection L's and shall be used as a template to drill in the field to 26 mm ϕ for M24 H.S. Bolts after new structural steel sections are properly fitted into position.

ELEVATION - FLOOR BEAMS
#11, #12, #14, #15, #17, #18, #20 & #21
AT L_1, L_2, L_4, L_5, L_7, L_8, L_{10} & L_{11} (SPAN 6)
ELEVATION - FLOOR BEAMS
#37, #38, #40, #41, #43, #44, #46 & #47
AT L_{27}, L_{28}, L_{30}, L_{31}, L_{33}, L_{34}, L_{36} & L_{37} (SPAN 8)
(16-Required)

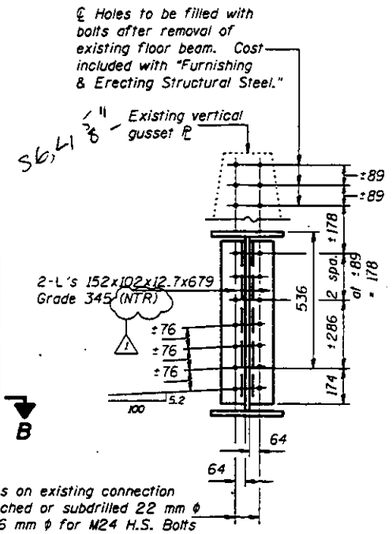

After measuring hole locations on existing connection angles, holes shall be subpunched or subdrilled 22 mm ϕ and reamed in the field to 26 mm ϕ for M24 H.S. Bolts after new structural steel sections are properly fitted into position.

SOUTH END VIEW - SPAN 6
North End View Opposite Hand

NORTH END VIEW - SPAN 8
South End View Opposite Hand

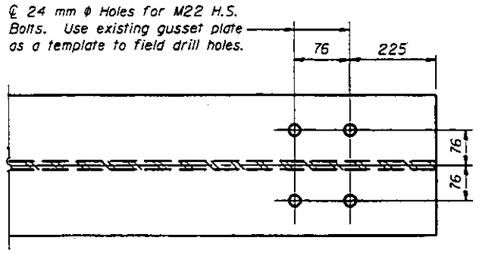

SECTION B-B
(Typical Each End)

Notes: "NTR" denotes material to which Notch Toughness Requirements are applicable.
To facilitate field erection, floor beam lengths are 50 (25 each end) shorter than those taken from existing fabrication plans.
Work this sheet with sheets #37 and #39 of 123.

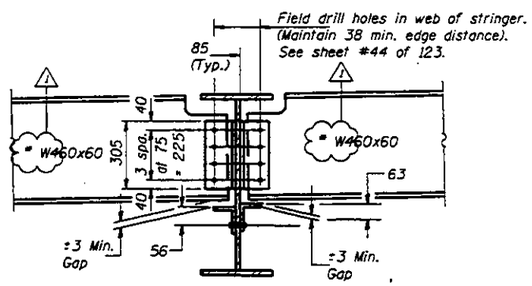

SECTION A-A
Looking North - Span 6
Looking South - Span 8

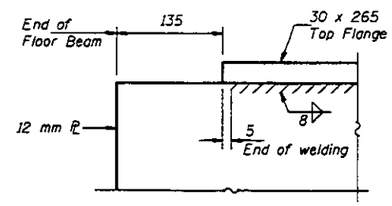

DETAIL "A"

* Grade 345 (NTR)

DESIGNED	LSH
CHECKED	JLC TTDB
DRAWN	R. Doty
CHECKED	LSH TTDB

June 26, 1997
EXAMINED Engineer of Bridge Design
PASSED Engineer of Bridges and Structures

FLOOR BEAM DETAILS
SPANS 6 AND 8
F.A.P. RT. 315 SECTION 140B-I-4
FULTON AND MASON COUNTIES
STATION 10+646.69

Revised 7-16-97 STD

projects\rad00012\0630002b.dgn Jul. 21, 1997 15:32:43

STATE OF ILLINOIS
DEPARTMENT OF TRANSPORTATION

ROUTE NO.	SECTION	COUNTY	TOTAL SHEETS	SHEET NO.
F.A.P. 315	140B-I-4	FULTON & MASON		
FED. ROAD DIST. NO. 7	ILLINOIS	FED. AID PROJECT-		

SHEET NO. 47
123 SHEETS

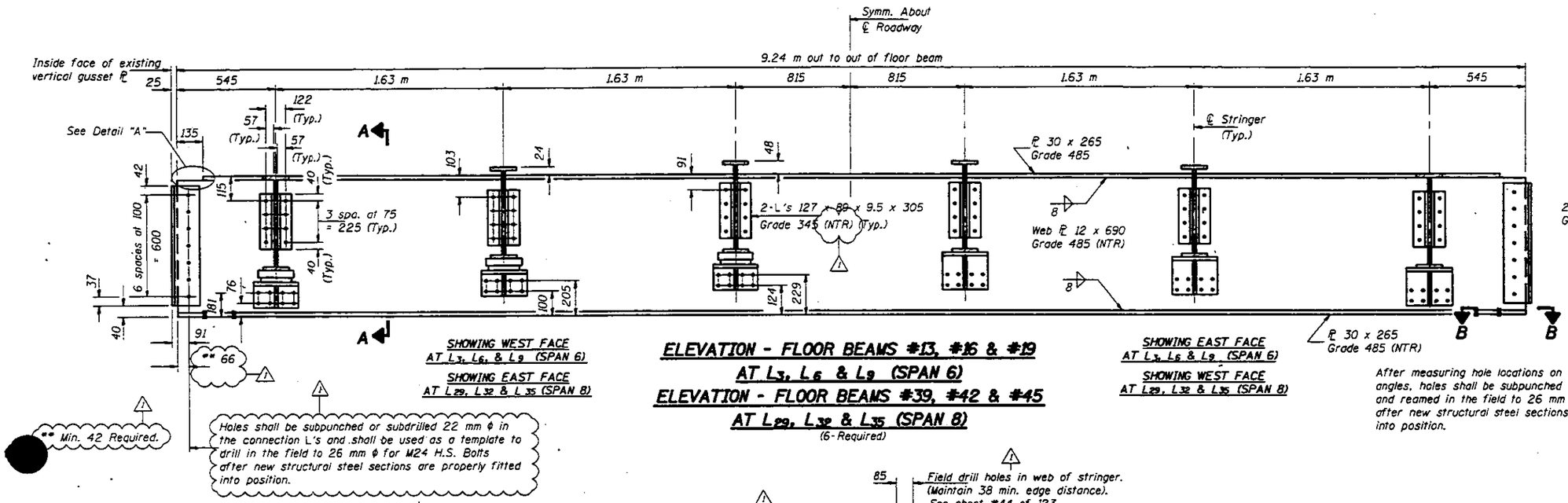

SHOWING WEST FACE AT L_3, L_6, & L_9 (SPAN 6)
SHOWING EAST FACE AT L_{29}, L_{32} & L_{35} (SPAN 8)

SHOWING EAST FACE AT L_3, L_6 & L_9 (SPAN 6)
SHOWING WEST FACE AT L_{29}, L_{32} & L_{35} (SPAN 8)

Holes shall be subpunched or subdrilled 22 mm ϕ in the connection L's and shall be used as a template to drill in the field to 26 mm ϕ for M24 H.S. Bolts after new structural steel sections are properly fitted into position.

ELEVATION - FLOOR BEAMS #13, #16 & #19 AT L_3, L_6 & L_9 (SPAN 6)
ELEVATION - FLOOR BEAMS #39, #42 & #45 AT L_{29}, L_{32} & L_{35} (SPAN 8)
(6-Required)

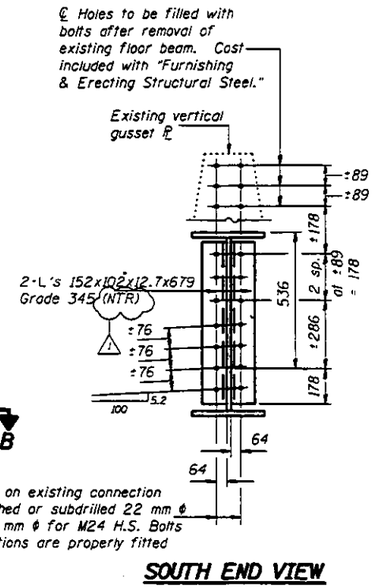

SOUTH END VIEW
at L_3, L_6, & L_9
North End View Opposite Hand

NORTH END VIEW
at L_{29}, L_{32}, & L_{35}
South End View Opposite Hand

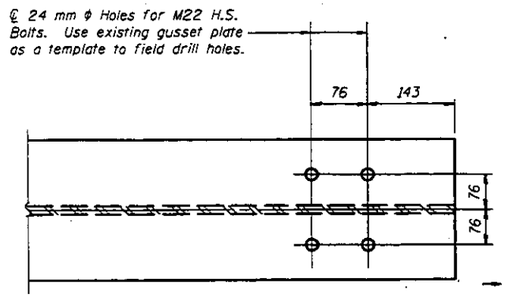

SECTION B-B
(Typical Each End)

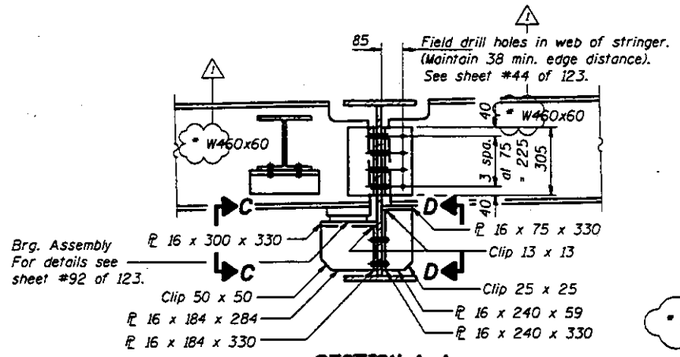

SECTION A-A
Looking North at L_3, L_6, L_9 & L_{12} (Span 6)
Looking South at L . L . L & L_{35} (Span 8)

Notes: "NTR" denotes material to which Notch Toughness Requirements are applicable.
To facilitate field erection, floor beam lengths are 50 (25 each end) shorter than those taken from existing fabrication plans.
Work this sheet with sheets #37 and #39 of 123.

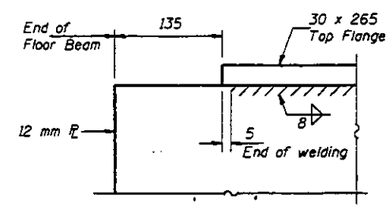

DETAIL "A"

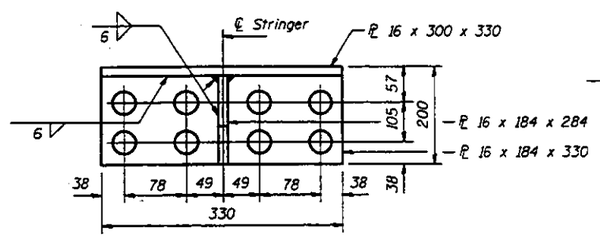

VIEW C-C
(6 Required Each Floor Beam)

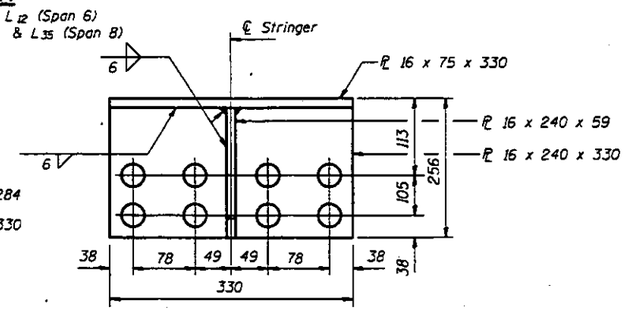

VIEW D-D
(6 Required Each Floor Beam)

DESIGNED	LSH
CHECKED	JLC TTBB
DRAWN	R. Doty
CHECKED	LSH TTBB

June 26, 1997
EXAMINED Greg J. Hagen — ENGINEER OF BRIDGE DESIGN
PASSED Robert E. Gaston — ENGINEER OF BRIDGES AND STRUCTURES

FLOOR BEAM DETAILS
SPANS 6 AND 8
F.A.P. RT. 315 SECTION 140B-I-4
FULTON AND MASON COUNTIES
STATION 10+646.69

Revised 7-16-97 STD

projects\rad00012\0630002b.dgn Jul. 21, 1997 15:32:35

STATE OF ILLINOIS
DEPARTMENT OF TRANSPORTATION

ROUTE NO.	SECTION	COUNTY	TOTAL SHEETS	SHEET NO.
F.A.P. 315	140B-I-4	FULTON & MASON		
PROJECT NO.	ILLINOIS	FED. AID PROJECT		

SHEET NO. 48
123 SHEETS

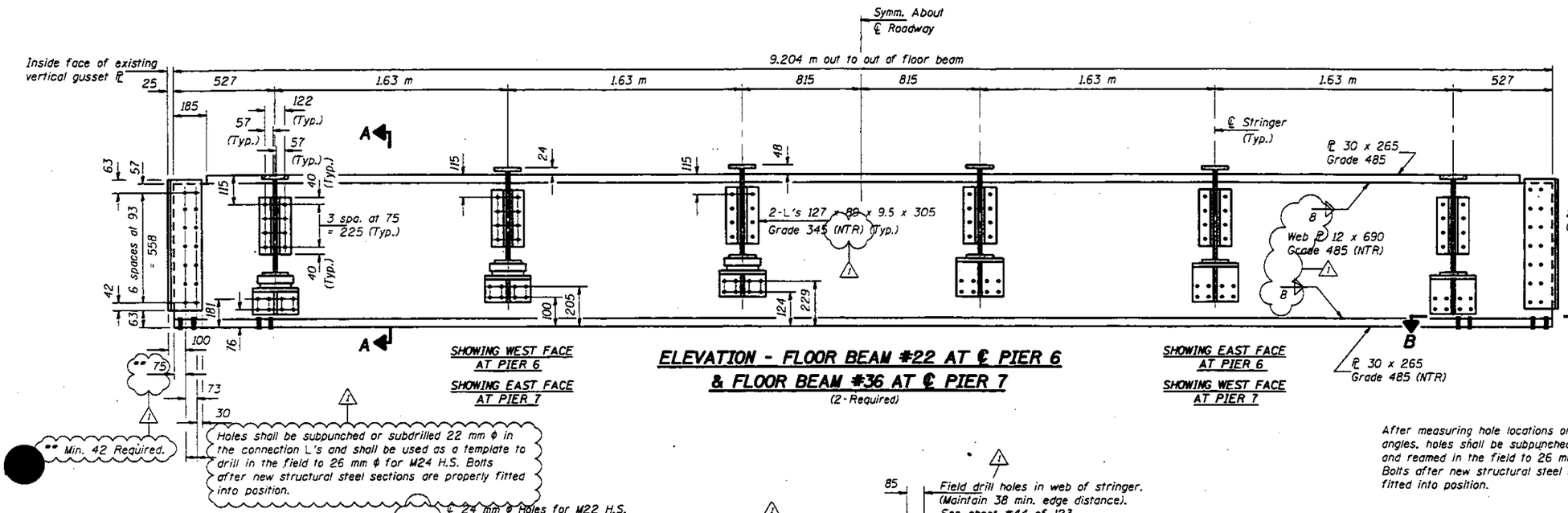

SHOWING WEST FACE AT PIER 6
SHOWING EAST FACE AT PIER 7

ELEVATION - FLOOR BEAM #22 AT ℄ PIER 6 & FLOOR BEAM #36 AT ℄ PIER 7

(2-Required)

SHOWING EAST FACE AT PIER 6
SHOWING WEST FACE AT PIER 7

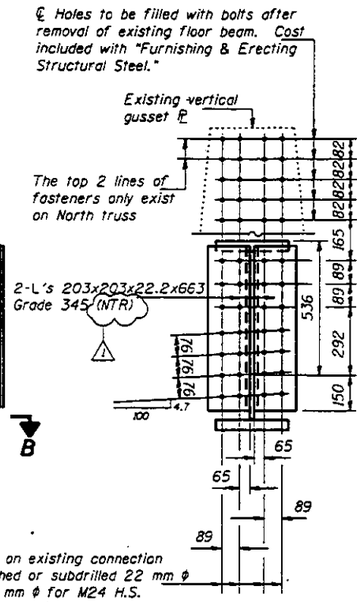

After measuring hole locations on existing connection angles, holes shall be subpunched or subdrilled 22 mm ϕ and reamed in the field to 26 mm ϕ for M24 H.S. Bolts after new structural steel sections are properly fitted into position.

SOUTH END VIEW

at ℄ Pier 6
North End View Opposite Hand

NORTH END VIEW

at ℄ Pier 7
South End View Opposite Hand

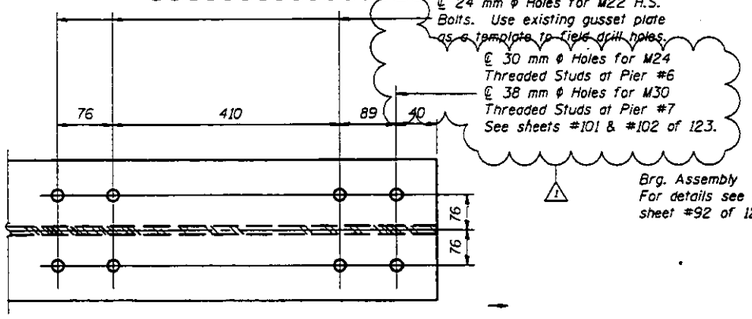

SECTION B-B

(Typical Each End)

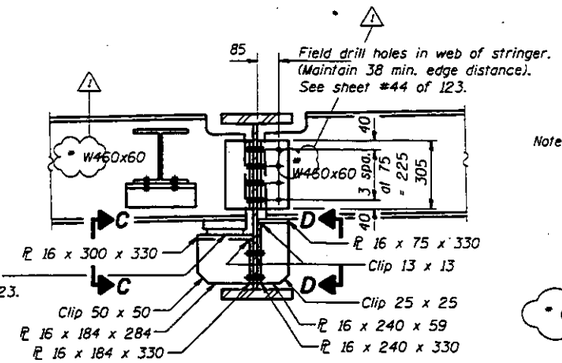

SECTION A-A

Looking North at Pier 6
Looking South at Pier 7

Notes: "NTR" denotes material to which Notch Toughness Requirements are applicable. To facilitate field erection, floor beam lengths are 50 (25 each end) shorter than those taken from existing fabrication plans. Work this sheet with sheet #38 of 123.

* Grade 345 (NTR)

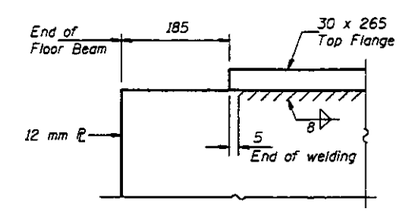

DETAIL "A"

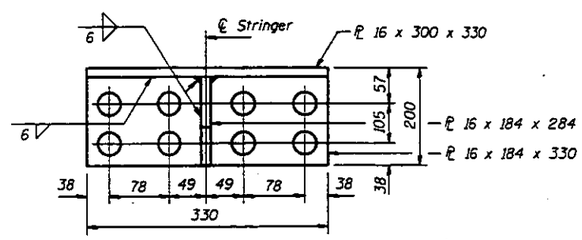

VIEW C-C

(6 Required Each Floor Beam)

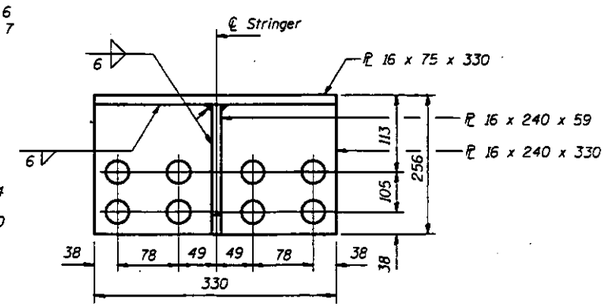

VIEW D-D

(6 Required Each Floor Beam)

DESIGNED	LSH
CHECKED	JLC TTBB
DRAWN	R. Doty
CHECKED	LSH TTBB

June 26, 1997
EXAMINED
PASSED
ENGINEER OF BRIDGE DESIGN
ENGINEER OF BRIDGES AND STRUCTURES

FLOOR BEAM DETAILS AT ℄ PIERS 6 AND 7
F.A.P. RT. 315 SECTION 140B-I-4
FULTON AND MASON COUNTIES
STATION 10+646.69

Revised 7-16-97 STD

projects\rad00012\0630002b.dgn Jul. 21, 1997 15:37:27

STATE OF ILLINOIS
DEPARTMENT OF TRANSPORTATION

ROUTE NO.	SECTION	COUNTY	TOTAL SHEETS	SHEET NO.
F.A.P. 315	140B-I-4	FULTON & MASON		
FED. ROAD DIST. NO. 7	ILLINOIS	FED. AID PROJECT-		

SHEET NO. 49
123 SHEETS

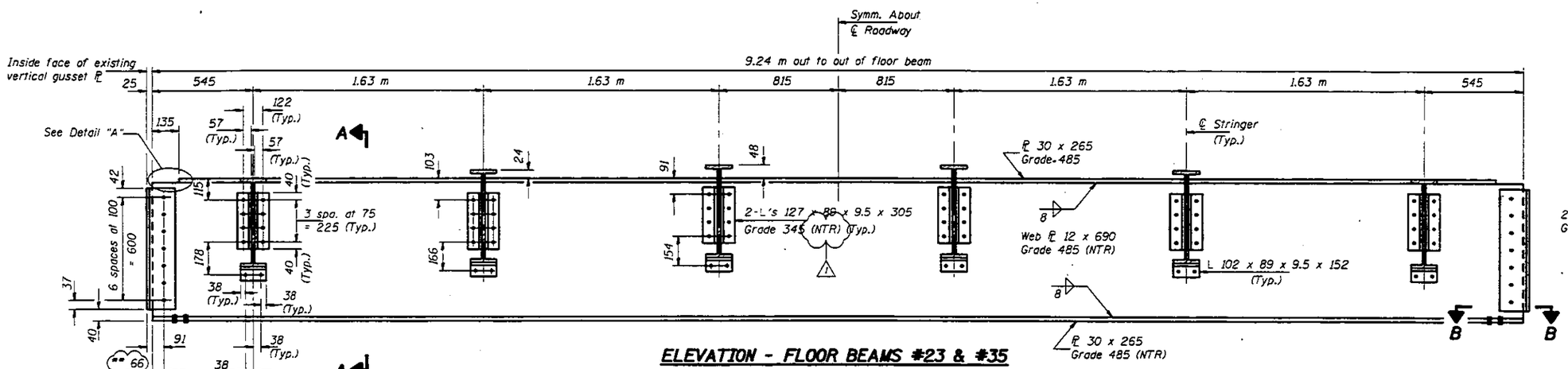

ELEVATION - FLOOR BEAMS #23 & #35 AT L_{13} & L_{25} (SPAN 7)

(Looking East) (2-Required)

** Min. 42 Required.

Holes shall be subpunched or subdrilled 22 mm ϕ in the connection L's and shall be used as a template to drill in the field to 26 mm ϕ for M24 H.S. Bolts after new structural steel sections are properly fitted into position.

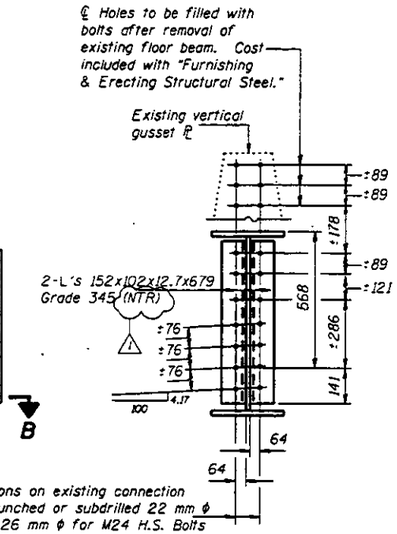

After measuring hole locations on existing connection angles, holes shall be subpunched or subdrilled 22 mm ϕ and reamed in the field to 26 mm ϕ for M24 H.S. Bolts after new structural steel sections are properly fitted into position.

SOUTH END VIEW - L_{13}

North End View Opposite Hand

NORTH END VIEW - L_{25}

South End View Opposite Hand

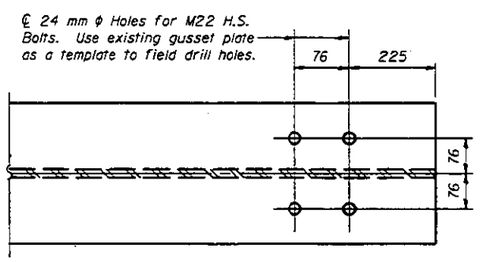

SECTION B-B

(Typical Each End)

Notes: "NTR" denotes material to which Notch Toughness Requirements are applicable.
To facilitate field erection, floor beam lengths are 50 (25 each end) shorter than those taken from existing fabrication plans.
Work this sheet with sheet #38 of 123.

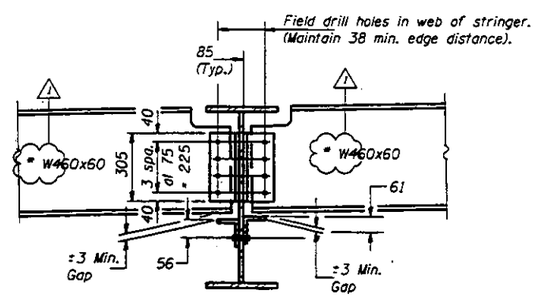

SECTION A-A

Looking North - L_{13}
Looking South - L_{25}

* Grade 345 (NTR)

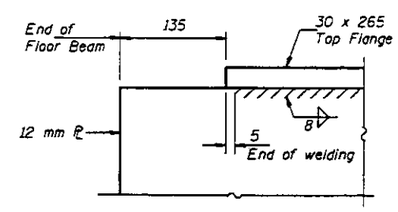

DETAIL "A"

DESIGNED	LSH
CHECKED	JLC TTBB
DRAWN	R. Doty
CHECKED	LSH TTBB

June 26, 1997

EXAMINED Greg J. Keeper — ENGINEER OF BRIDGE DESIGN
PASSED Ralph E. Anderson — ENGINEER OF BRIDGES AND STRUCTURES

FLOOR BEAM DETAILS
SPAN 7
F.A.P. RT. 315 SECTION 140B-I-4
FULTON AND MASON COUNTIES
STATION 10+646.69

Revised 7-16-97 STD

projects\rad00012\0630002b.dgn Jul. 21, 1997 15:32:58

STATE OF ILLINOIS
DEPARTMENT OF TRANSPORTATION

TRAFFIC NO.	SECTION	COUNTY	TOTAL SHEETS	SHEET NO.
F.A.P. 315	140B-I-4	FULTON & MASON		
FED. ROAD DIST. NO. 7	ILLINOIS	FED. AID PROJECT-		

SHEET NO. 50
123 SHEETS

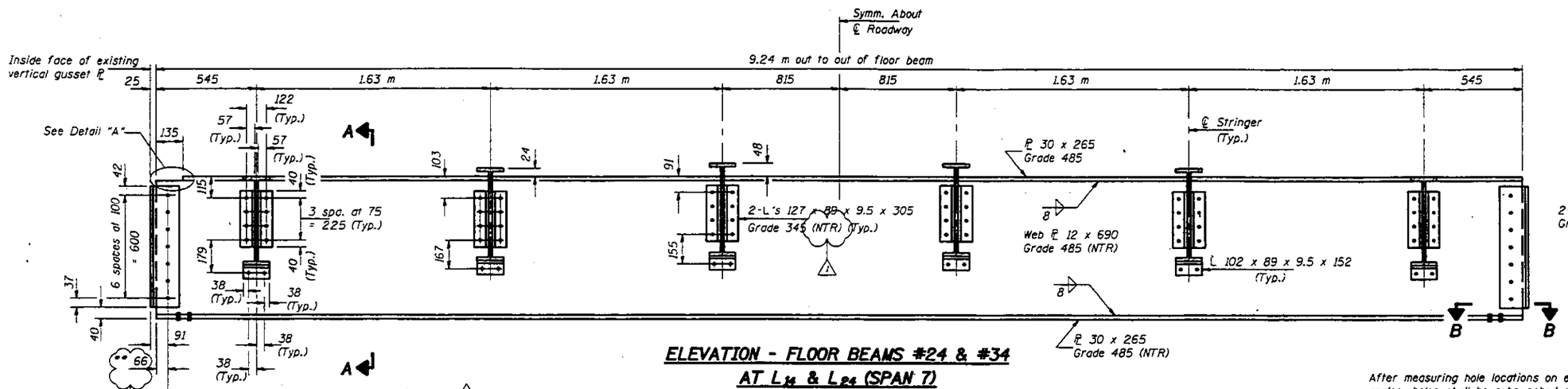

ELEVATION - FLOOR BEAMS #24 & #34
AT L_{14} & L_{24} (SPAN 7)
(Looking East) (2-Required)

** Min. 42 Required.

Holes shall be subpunched or subdrilled 22 mm ϕ in the connection L's and shall be used as a template to drill in the field to 26 mm ϕ for M24 H.S. Bolts after new structural steel sections are properly fitted into position.

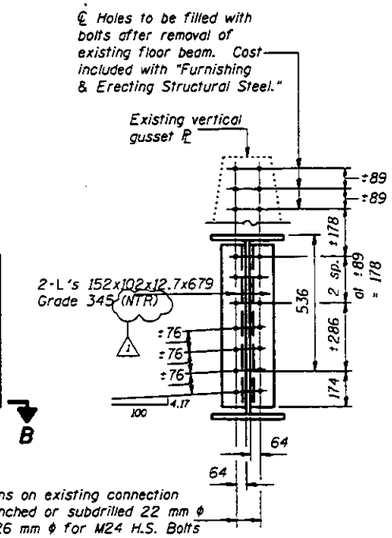

After measuring hole locations on existing connection angles, holes shall be subpunched or subdrilled 22 mm ϕ and reamed in the field to 26 mm ϕ for M24 H.S. Bolts after new structural steel sections are properly fitted into position.

SOUTH END VIEW - L_{14}
North End View Opposite Hand

NORTH END VIEW - L_{24}
South End View Opposite Hand

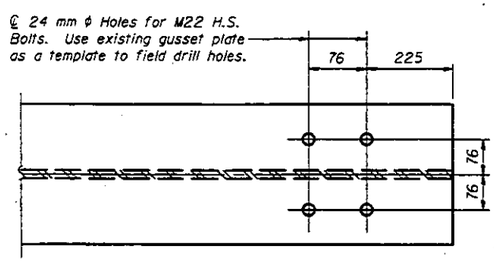

SECTION B-B
(Typical Each End)

Notes: "NTR" denotes material to which Notch Toughness Requirements are applicable.
To facilitate field erection, floor beam lengths are 50 (25 each end) shorter than those taken from existing fabrication plans.
Work this sheet with sheet #38 of 123.

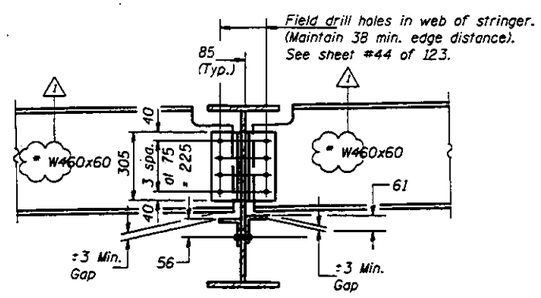

SECTION A-A
Looking North - L_{14}
Looking South - L_{24}

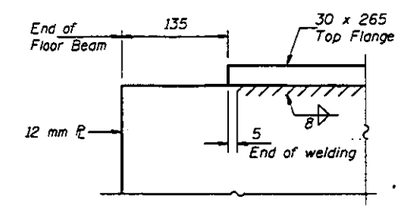

DETAIL "A"

* Grade 345 (NTR)

DESIGNED	LSH
CHECKED	JLC TTBB
DRAWN	R. Doty
CHECKED	LSH TTBB

June 26, 1997
EXAMINED Engineer of Bridge Design
PASSED Engineer of Bridges and Structures

FLOOR BEAM DETAILS
SPAN 7
F.A.P. RT. 315 SECTION 140B-I-4
FULTON AND MASON COUNTIES
STATION 10+646.69

Revised 7-16-97 STD

projects\rad00012\0630002b.dgn Jul. 21, 1997 15:33:05

STATE OF ILLINOIS
DEPARTMENT OF TRANSPORTATION

ROUTE NO.	SECTION	COUNTY	TOTAL SHEETS	SHEET NO.
F.A.P. 315	140B-1-4	FULTON & MASON		
FED. ROAD DIST. NO. 7	ILLINOIS	FED. AID PROJECT-		

SHEET NO. 51
123 SHEETS

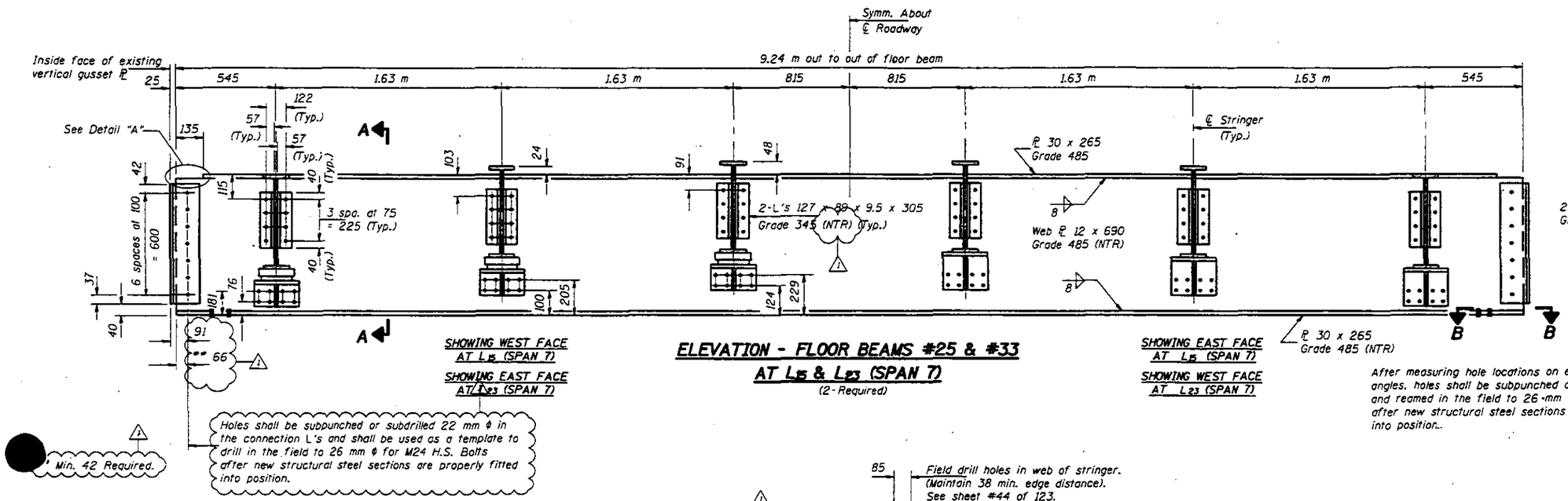

ELEVATION - FLOOR BEAMS #25 & #33 AT L_{15} & L_{23} (SPAN 7)

(2 - Required)

Holes shall be subpunched or subdrilled 22 mm ϕ in the connection L's and shall be used as a template to drill in the field to 26 mm ϕ for M24 H.S. Bolts after new structural steel sections are properly fitted into position.

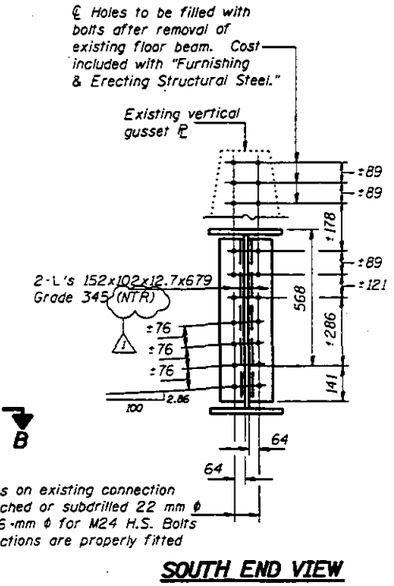

After measuring hole locations on existing connection angles, holes shall be subpunched or subdrilled 22 mm ϕ and reamed in the field to 26 mm ϕ for M24 H.S. Bolts after new structural steel sections are properly fitted into position.

SOUTH END VIEW

at L_{15}
North End View Opposite Hand

NORTH END VIEW

at L_{23}
South End View Opposite Hand

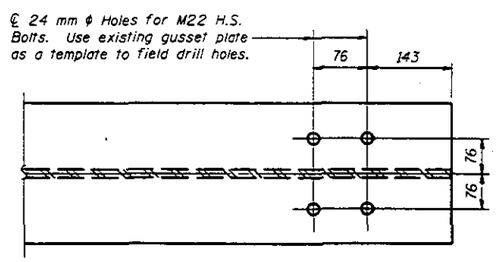

SECTION B-B

(Typical Each End)

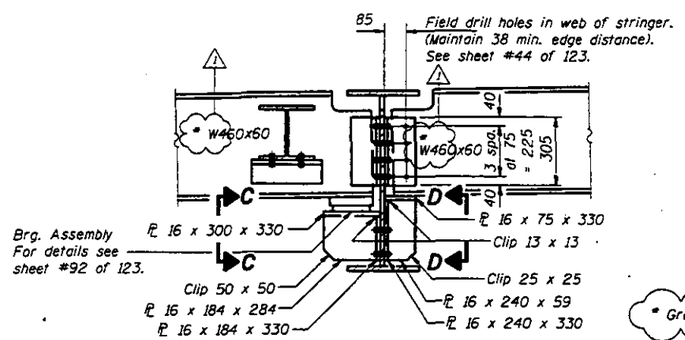

SECTION A-A

Looking North at L_{15} (Span 7)
Looking South at L_{23} (Span 7)

* Grade 345 (NTR)

Notes: "NTR" denotes material to which Notch Toughness Requirements are applicable.
To facilitate field erection, floor beam lengths are 50 (25 each end) shorter than those taken from existing fabrication plans.
Work this sheet with sheet #38 of 123.

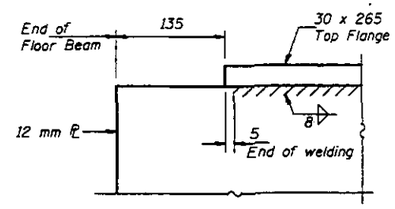

DETAIL "A"

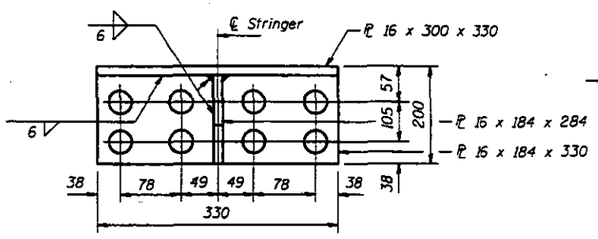

VIEW C-C

(6 Required Each Floor Beam)

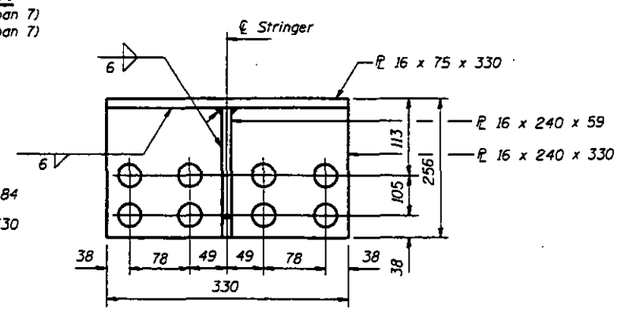

VIEW D-D

(6 Required Each Floor Beam)

DESIGNED	LSH
CHECKED	JLC TTBB
DRAWN	R. Doty
CHECKED	LSH TTBB

June 26, 1997
EXAMINED Engineer of General Design
PASSED Engineer of Bridges and Structures

FLOOR BEAM DETAILS
SPAN 7
F.A.P. RT. 315 SECTION 140B-I-4
FULTON AND MASON COUNTIES
STATION 10+646.69

Revised 7-16-97 STD

projects\rad00012\0630002b.dgn Jul. 21, 1997 15:33:35

STATE OF ILLINOIS
DEPARTMENT OF TRANSPORTATION

ROUTE NO.	SECTION	COUNTY	TOTAL SHEETS	SHEET NO.
F.A.P. 315	140B-I-4	FULTON & MASON		
FED. ROAD DIST. NO. 7	ILLINOIS	FED. AID PROJECT-		

SHEET NO. 52
123 SHEETS

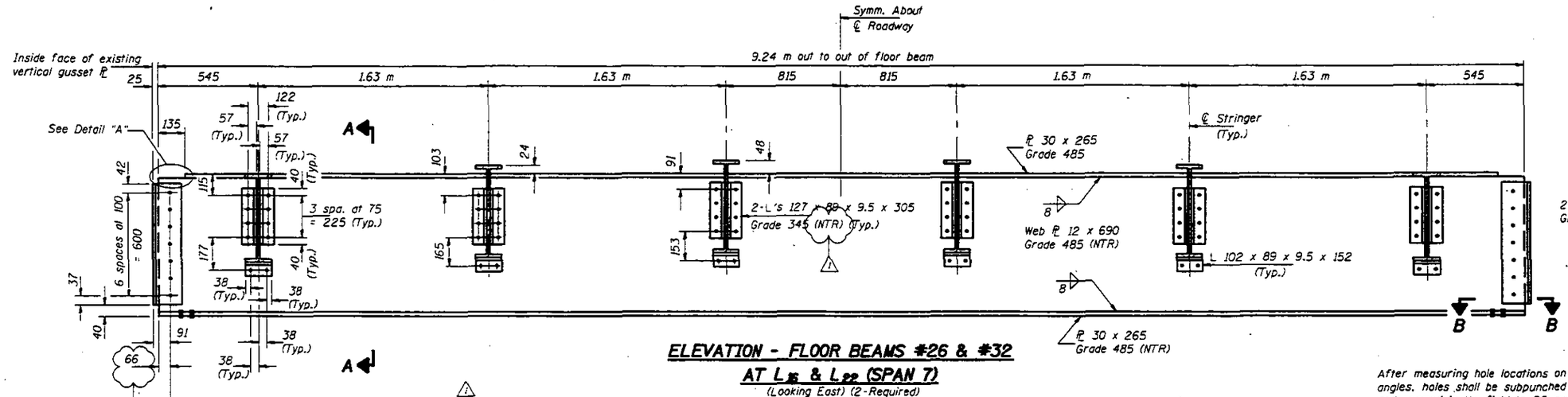

ELEVATION - FLOOR BEAMS #26 & #32 AT L_{16} & L_{22} (SPAN 7)

(Looking East) (2-Required)

** Min. 42 Required.

Holes shall be subpunched or subdrilled 22 mm ϕ in the connection L's and shall be used as a template to drill in the field to 26 mm ϕ for M24 H.S. Bolts after new structural steel sections are properly fitted into position.

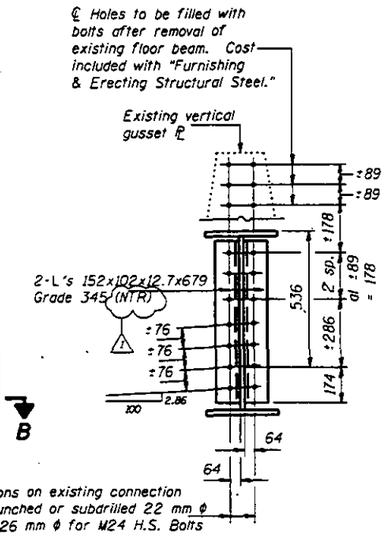

After measuring hole locations on existing connection angles, holes shall be subpunched or subdrilled 22 mm ϕ and reamed in the field to 26 mm ϕ for M24 H.S. Bolts after new structural steel sections are properly fitted into position.

SOUTH END VIEW - L_{16}

North End View Opposite Hand

NORTH END VIEW - L_{22}

South End View Opposite Hand

Notes: "NTR" denotes material to which Notch Toughness Requirements are applicable.
To facilitate field erection, floor beam lengths are 50 (25 each end) shorter than those taken from existing fabrication plans.
Work this sheet with sheet #38 of 123.

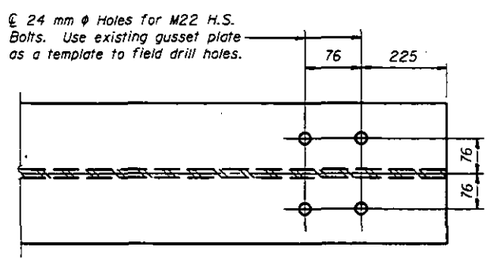

SECTION B-B

(Typical Each End)

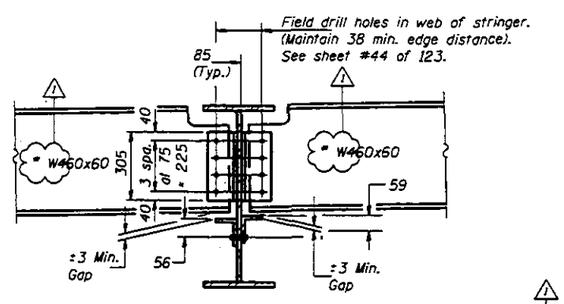

SECTION A-A

Looking North - L_{16}
Looking South - L_{22}

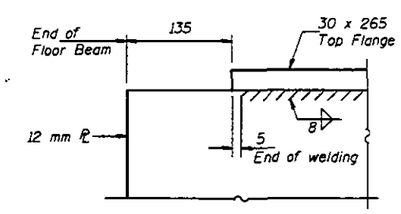

DETAIL "A"

* Grade 345 (NTR)

DESIGNED	LSH
CHECKED	JLC TTBB
DRAWN	R. Doty
CHECKED	LSH TTBB

June 26, 1997

EXAMINED Jaj J. Kasper — ENGINEER OF BRIDGE DESIGN
PASSED Ralph E. Anderson — ENGINEER OF BRIDGES AND STRUCTURES

FLOOR BEAM DETAILS
SPAN 7
F.A.P. RT. 315 SECTION 140B-I-4
FULTON AND MASON COUNTIES
STATION 10+646.69

Revised 7-16-97 STD

STATE OF ILLINOIS
DEPARTMENT OF TRANSPORTATION

ROUTE NO.	SECTION	COUNTY	TOTAL SHEETS	SHEET NO.
F.A.P. 315	140B-1-4	FULTON & MASON		
FED. ROAD DIST. NO. 7		ILLINOIS	FED. AID PROJECT-	

SHEET NO. 53
123 SHEETS

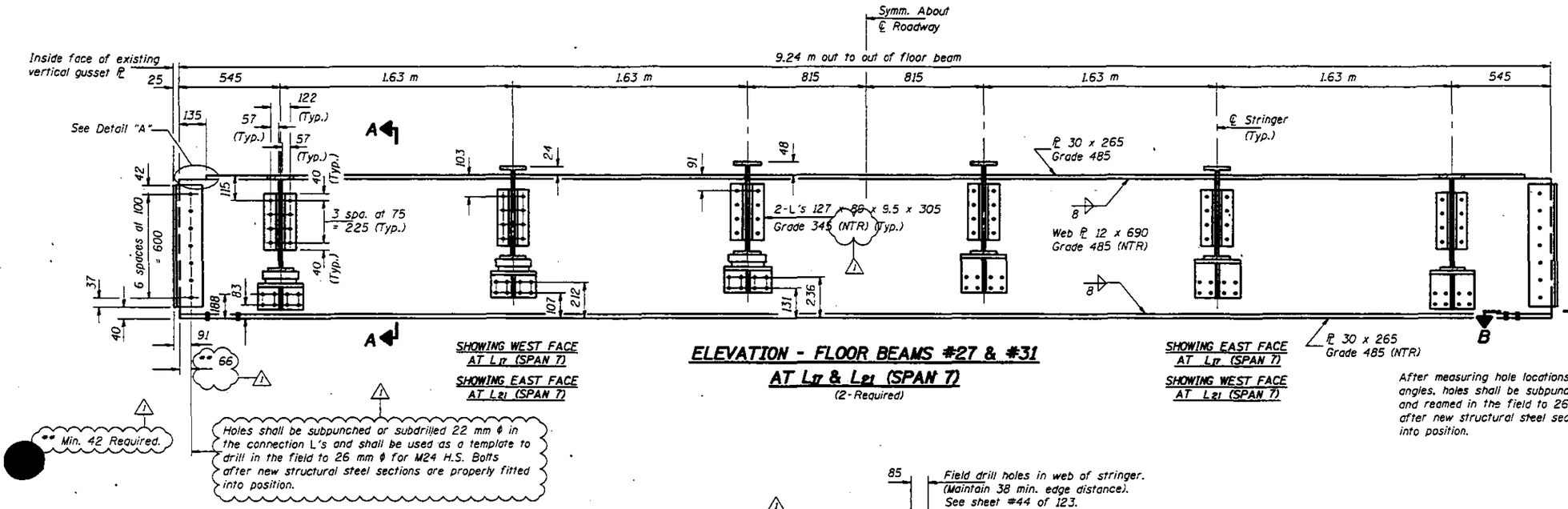

SHOWING WEST FACE AT L_{17} (SPAN 7)
SHOWING EAST FACE AT L_{21} (SPAN 7)

ELEVATION - FLOOR BEAMS #27 & #31 AT L_{17} & L_{21} (SPAN 7)

(2-Required)

SHOWING EAST FACE AT L_{17} (SPAN 7)
SHOWING WEST FACE AT L_{21} (SPAN 7)

Holes shall be subpunched or subdrilled 22 mm ϕ in the connection L's and shall be used as a template to drill in the field to 26 mm ϕ for M24 H.S. Bolts after new structural steel sections are properly fitted into position.

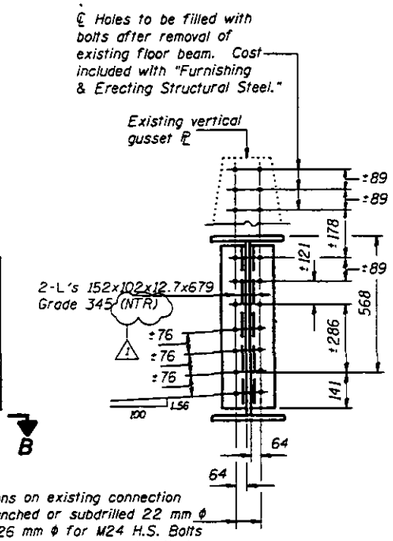

After measuring hole locations on existing connection angles, holes shall be subpunched or subdrilled 22 mm ϕ and reamed in the field to 26 mm ϕ for M24 H.S. Bolts after new structural steel sections are properly fitted into position.

SOUTH END VIEW

at L_{17}
North End View Opposite Hand

NORTH END VIEW

at L_{21}
South End View Opposite Hand

Notes: "NTR" denotes material to which Notch Toughness Requirements are applicable.
To facilitate field erection, floor beam lengths are 50 (25 each end) shorter than those taken from existing fabrication plans.
Work this sheet with sheet #38 of 123.

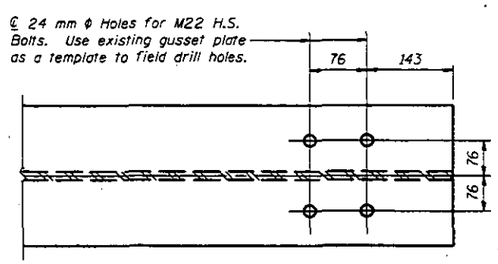

SECTION B-B

(Typical Each End)

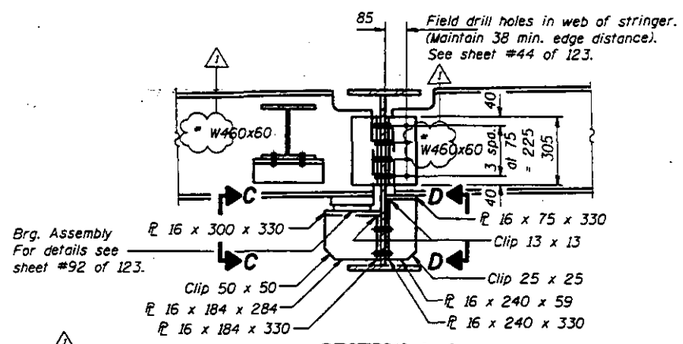

SECTION A-A

Looking North at L_{17} (Span 7)
Looking South at L_{21} (Span 7)

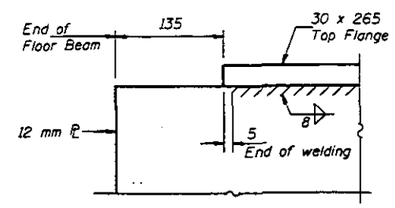

DETAIL "A"

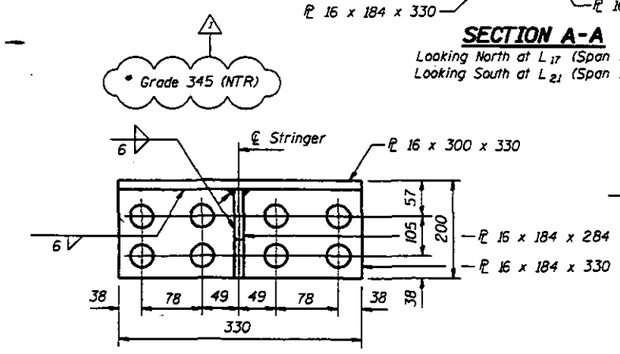

VIEW C-C

(6 Required Each Floor Beam)

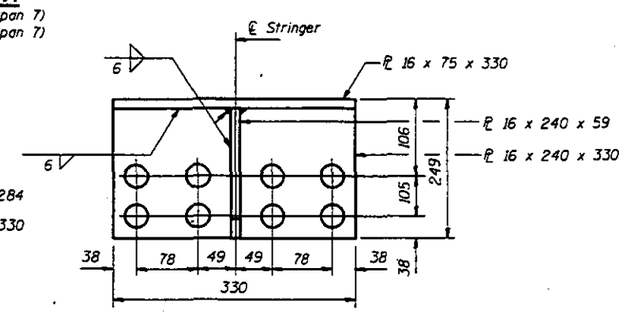

VIEW D-D

(6 Required Each Floor Beam)

DESIGNED	LSH
CHECKED	JLC TTBB
DRAWN	R. Doty
CHECKED	LSH TTBB

June 26, 1997
EXAMINED Engineer of General Design
PASSED Engineer of Bridges and Structures

FLOOR BEAM DETAILS
SPAN 7
F.A.P. RT. 315 SECTION 140B-I-4
FULTON AND MASON COUNTIES
STATION 10+646.69

Revised 7-16-97 STD

STATE OF ILLINOIS
DEPARTMENT OF TRANSPORTATION

ROUTE NO.	SECTION	COUNTY	TOTAL SHEETS	SHEET NO.
F.A.P. 315	140B-I-4	FULTON & MASON		
FED. ROAD DIST. NO. 7	ILLINOIS	FED. AID PROJECT-		

SHEET NO. 54
123 SHEETS

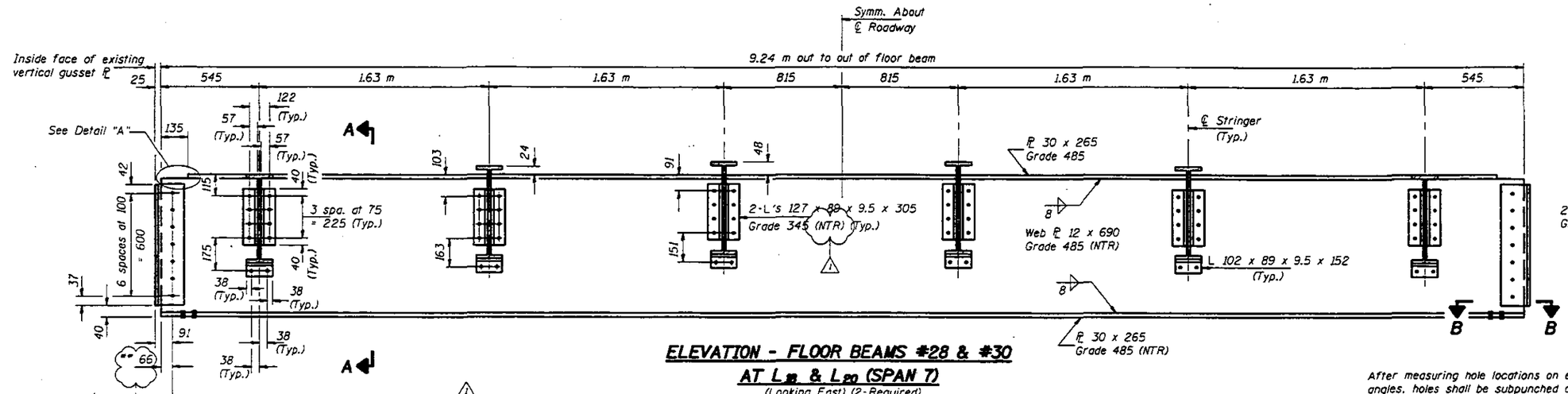

ELEVATION - FLOOR BEAMS #28 & #30 AT L_{18} & L_{20} (SPAN 7)

(Looking East) (2-Required)

** Min. 42 Required.

Holes shall be subpunched or subdrilled 22 mm ϕ in the connection L's and shall be used as a template to drill in the field to 26 mm ϕ for M24 H.S. Bolts after new structural steel sections are properly fitted into position.

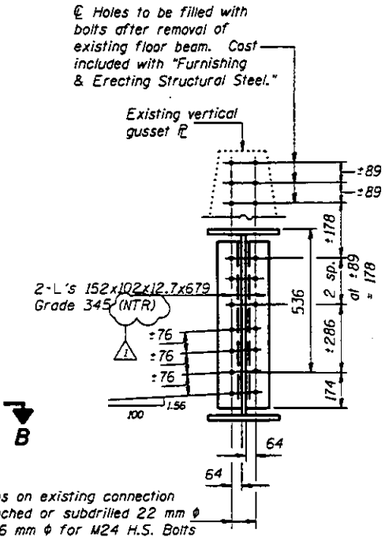

After measuring hole locations on existing connection angles, holes shall be subpunched or subdrilled 22 mm ϕ and reamed in the field to 26 mm ϕ for M24 H.S. Bolts after new structural steel sections are properly fitted into position.

SOUTH END VIEW - L_{18}

North End View Opposite Hand

NORTH END VIEW - L_{20}

South End View Opposite Hand

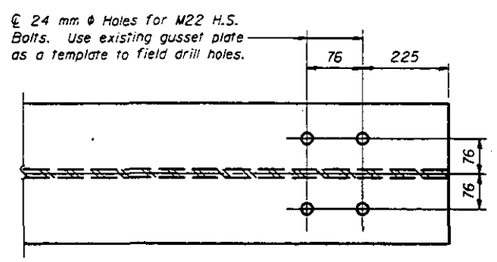

SECTION B-B

(Typical Each End)

Notes: "NTR" denotes material to which Notch Toughness Requirements are applicable.
To facilitate field erection, floor beam lengths are 50 (25 each end) shorter than those taken from existing fabrication plans.
Work this sheet with sheet #38 of 123.

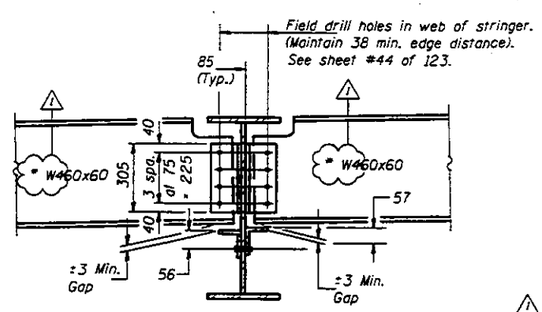

SECTION A-A

Looking North - L_{18}
Looking South - L_{20}

* Grade 345 (NTR)

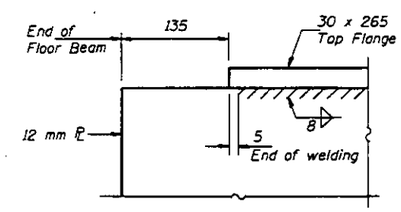

DETAIL "A"

DESIGNED	LSH
CHECKED	JLC TTBB
DRAWN	R. Doty
CHECKED	LSH TTBB

June 26, 1997

EXAMINED Engineer of Bridge Design

PASSED Engineer of Bridges and Structures

FLOOR BEAM DETAILS
SPAN 7
F.A.P. RT. 315 SECTION 140B-I-4
FULTON AND MASON COUNTIES
STATION 10+646.69

Revised 7-16-97 STD

\projects\rad00012\0630002b.dgn Jul. 21, 1997 15:33:24

STATE OF ILLINOIS
DEPARTMENT OF TRANSPORTATION

ROUTE NO.	SECTION	COUNTY	TOTAL SHEETS	SHEET NO.
F.A.P. 315	140B-1-4	FULTON & MASON		
FED. ROAD DIST. NO. 7	ILLINOIS	FED. AID PROJECT-		

SHEET NO. 55
123 SHEETS

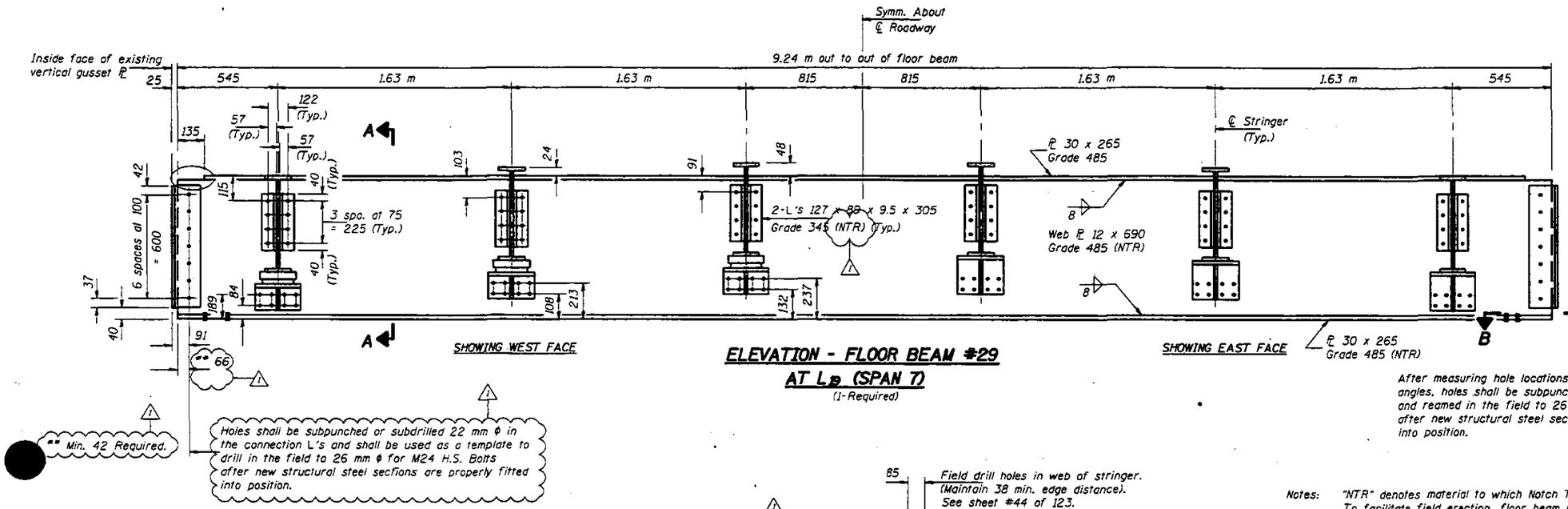

ELEVATION - FLOOR BEAM #29 AT L_B (SPAN 7)

(1-Required)

** Min. 42 Required.

Holes shall be subpunched or subdrilled 22 mm ϕ in the connection L's and shall be used as a template to drill in the field to 26 mm ϕ for M24 H.S. Bolts after new structural steel sections are properly fitted into position.

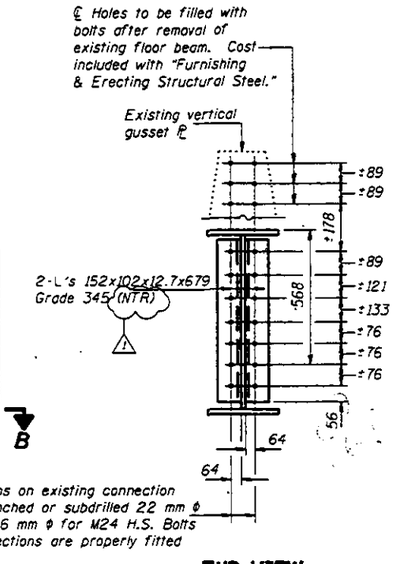

After measuring hole locations on existing connection angles, holes shall be subpunched or subdrilled 22 mm ϕ and reamed in the field to 26 mm ϕ for M24 H.S. Bolts after new structural steel sections are properly fitted into position.

END VIEW

Notes: "NTR" denotes material to which Notch Toughness Requirements are applicable.
To facilitate field erection, floor beam lengths are 50 (25 each end) shorter than those taken from existing fabrication plans.
Work this sheet with sheet #38 of 123.

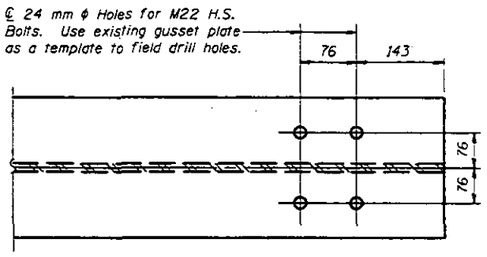

SECTION B-B

(Typical Each End)

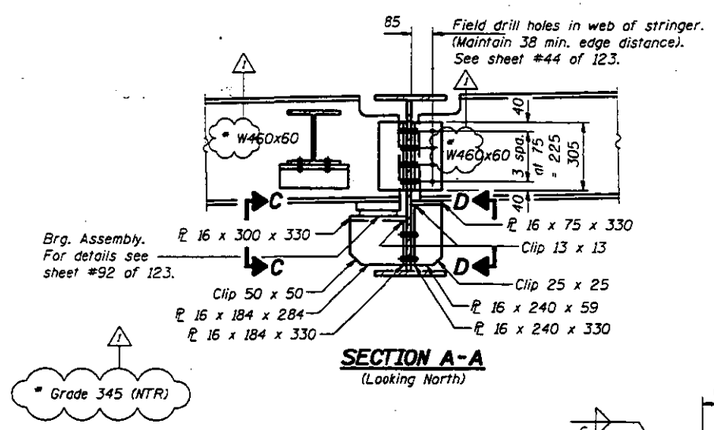

SECTION A-A

(Looking North)

* Grade 345 (NTR)

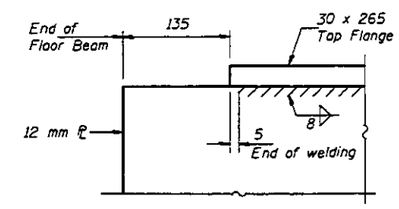

DETAIL "A"

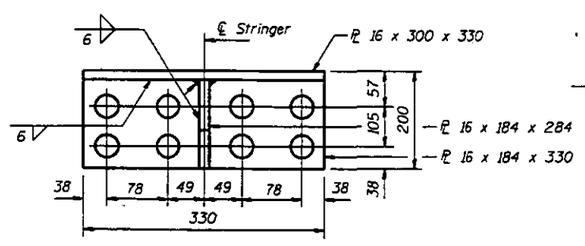

VIEW C-C

(6 Required Each Floor Beam)

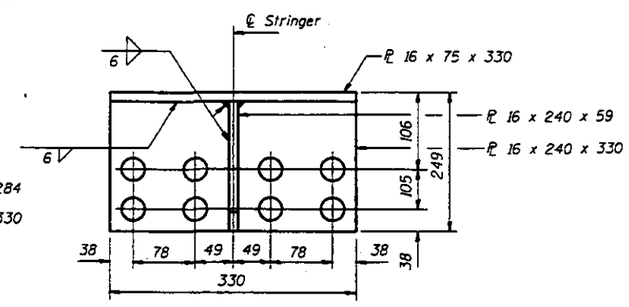

VIEW D-D

(6 Required Each Floor Beam)

DESIGNED	LSH
CHECKED	JLC TTBB
DRAWN	R. Doty
CHECKED	LSH TTBB

June 26, 1997
EXAMINED [signature] ENGINEER OF BRIDGE DESIGN
PASSED [signature] ENGINEER OF BRIDGES AND STRUCTURES

FLOOR BEAM DETAILS
SPAN 7
F.A.P. RT. 315 SECTION 140B-I-4
FULTON AND MASON COUNTIES
STATION 10+646.69

△1 Revised 7-16-97 STD

\projects\rad00012\0630002b.dgn Jul. 21, 1997 15:33:48

STATE OF ILLINOIS
DEPARTMENT OF TRANSPORTATION

F.A.P. 315	140B-1-4	FULTON & MASON		

SHEET NO. 56
123 SHEETS

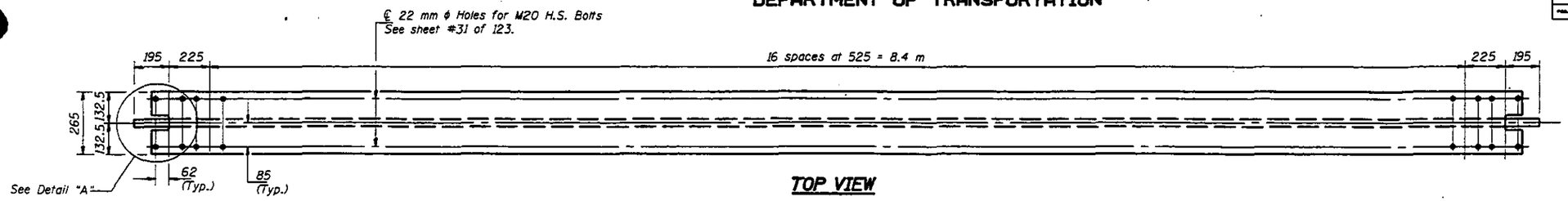

TOP VIEW

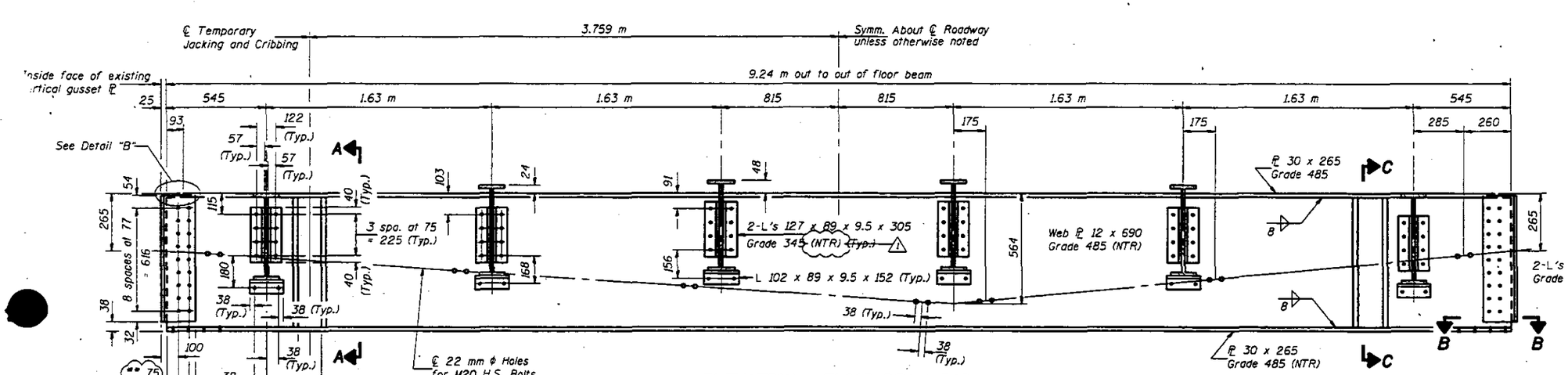

ELEVATION - FLOOR BEAM #48
AT L 38 (SPAN 8)
(Looking East - 1 Required)

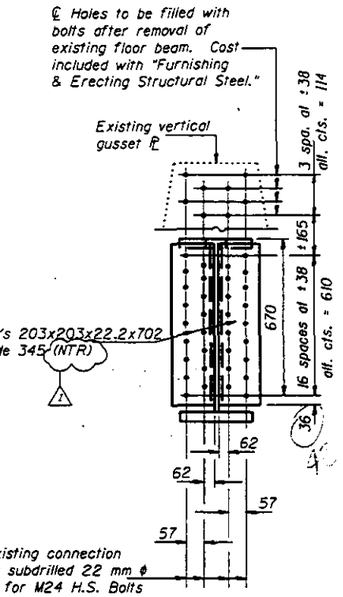

After measuring hole locations on existing connection angles, holes shall be subpunched or subdrilled 22 mm ϕ and reamed in the field to 26 mm ϕ for M24 H.S. Bolts after new structural steel sections are properly fitted into position.

END VIEW

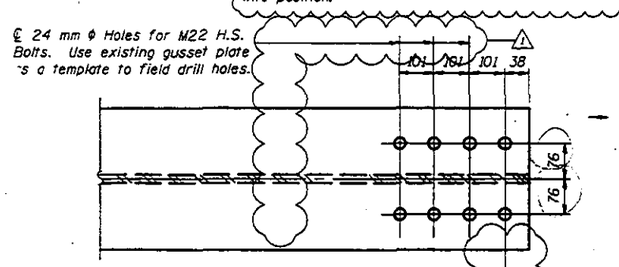

SECTION B-B
(Typical Each End)

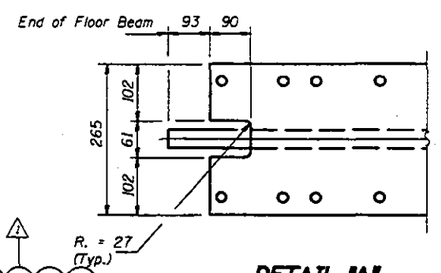

DETAIL "A"

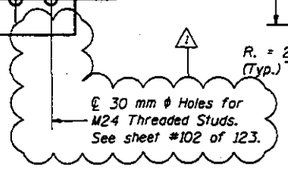

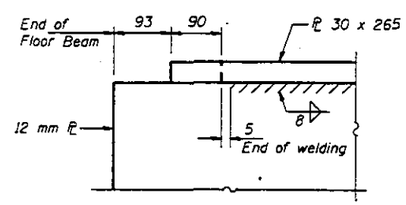

DETAIL "B"

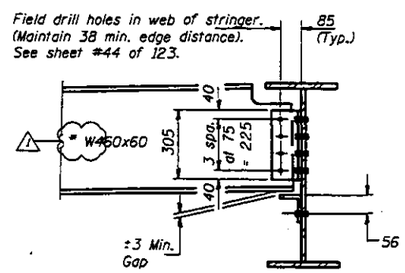

SECTION A-A

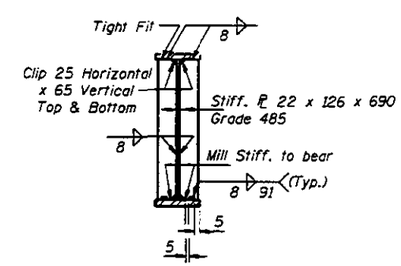

SECTION C-C

* Grade 345 (NTR)

DESIGNED	LSH
CHECKED	JLC TTBB
DRAWN	R. Doty
CHECKED	LSH TTBB

June 26, 1997

EXAMINED Engineer of Bridge Design
PASSED Engineer of Bridges and Structures

Notes: "NTR" denotes material to which Notch Toughness Requirements are applicable. To facilitate field erection, floor beam lengths are 50 (25 each end) shorter than those taken from existing fabrication plans. Work this sheet with sheet #39 of 123.

FLOOR BEAM DETAILS
SPAN 8
F.A.P. RT. 315 SECTION 140B-I-4
FULTON AND MASON COUNTIES
STATION 10+646.69

Revised 7-16-97 STD

STATE OF ILLINOIS
DEPARTMENT OF TRANSPORTATION

ROUTE NO.	SECTION	COUNTY	TOTAL SHEETS	SHEET NO.
F.A.P. 315	140B-I-4	FULTON & MASON		
FED. ROAD DIST. NO. 7	ILLINOIS	FED. AID PROJECT		

SHEET NO. 57
123 SHEETS

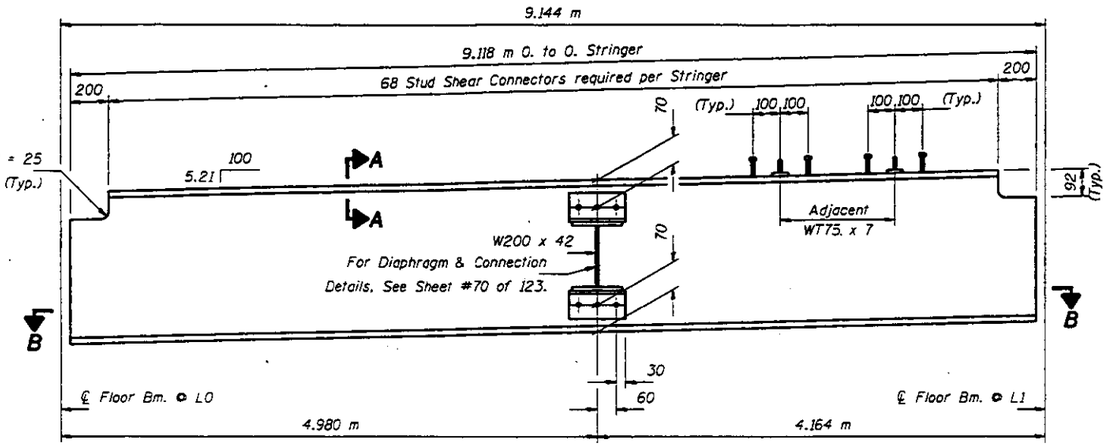

STRINGER S - SPAN #5

W460 x 60 (NTR)
(No. Required = 2)

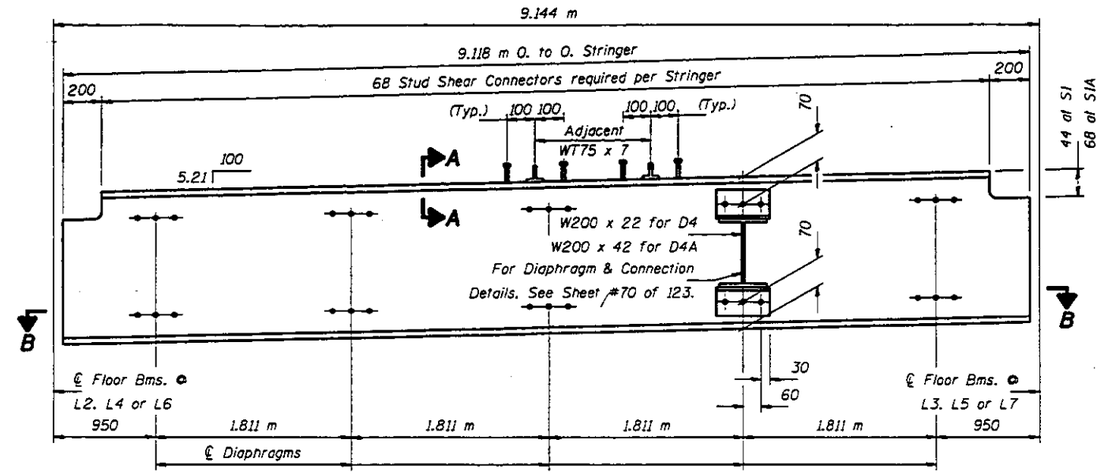

STRINGER S1 & S1A - SPAN #5

W460 x 60 (NTR)
(No. Required = 6 for S1 & 6 for S1A)

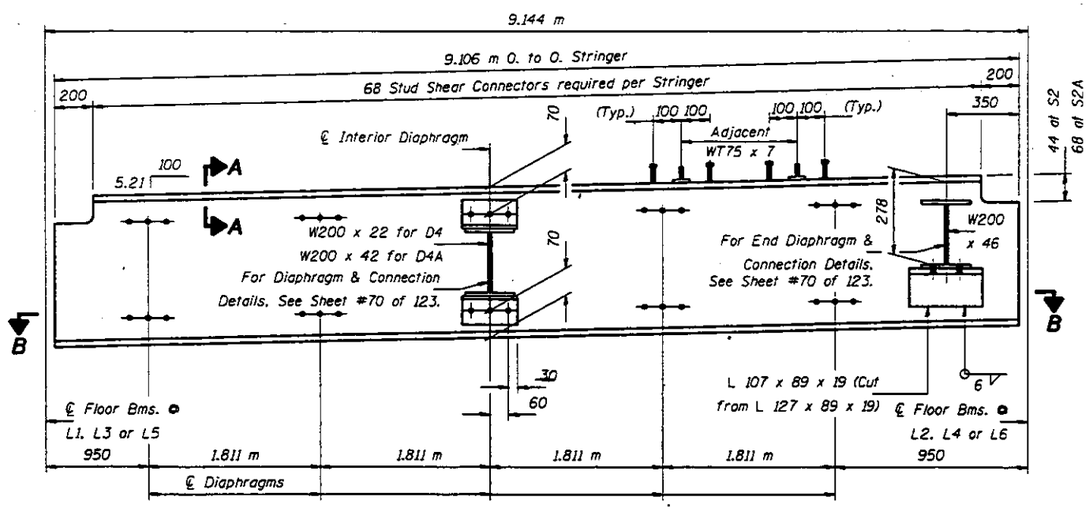

STRINGER S2 & S2A - SPAN #5

W460 x 60 (NTR)
(No. Required = 6 for S2 & 6 for S2A)

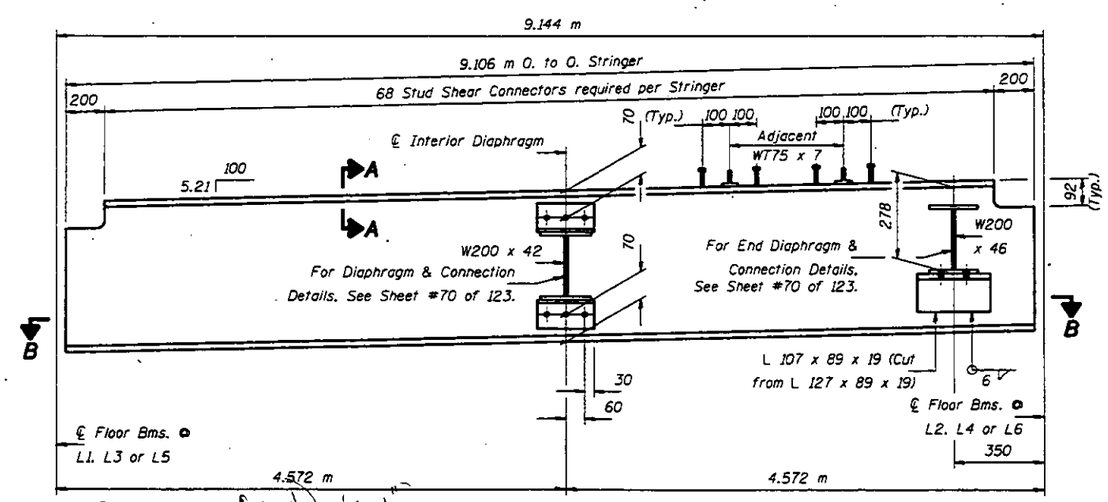

STRINGER S3 - SPAN #5

W460 x 60 (NTR)
(No. Required = 6)

Info
by 26 mm (℄ Fixed)
exp. ends
more (1")

Notes: For Sections A-A & B-B see sheet #69 of 123.
To facilitate field erection, stringer lengths are shorter than those taken from existing Fabrication Plans.
"NTR" denotes members to which Notch Toughness Requirements are applicable.
Hardered washers shall be required over all 24 mm ϕ holes.
All holes in the ends of the Stringer Webs shall be field drilled for end connections. See Floor Beam sheets #40 thru #44 of 123 for details. All other holes are shop drilled.
For Stringer locations see sheet #36 of 123.
Position Stringers S & S1 to maintain equal clearances from faces of floor beam webs at both ends.
Position Stringers S2 & S3 by placing Stringer end (end which is to have field drilled holes on Stringer Web) to maintain 12 mm clearance from face of Floor Beam Web.
After grid deck is installed on the Stringer, install stud shear connectors as shown. Place adjacent Stud Shear Connectors alternately as shown on Section A-A, see sheet #69 of 123.
Stringers shall be AASHTO M270M Grade 345. △1

DESIGNED	LSH
CHECKED	JLC TTBB
DRAWN	John F. Schneller Jr.
CHECKED	LSH TTBB

June 26, 1997
EXAMINED Greg L. Harper ENGINEER OF BRIDGE DESIGN
PASSED Ralph E. Anderson ENGINEER OF BRIDGES AND STRUCTURES

STRINGER DETAILS
F.A.P. RT. 315 SEC. 140B-I-4
FULTON AND MASON COUNTIES
STA. 10+646.69

△1 Revised 7-16-97 STD

STATE OF ILLINOIS
DEPARTMENT OF TRANSPORTATION

ROUTE NO.	SECTION	COUNTY	TOTAL SHEETS	SHEET NO.
F.A.P. 315	140B-1-4	FULTON & MASON		
FED. ROAD DIST. NO. 7	ILLINOIS	FED. AID PROJECT-		

SHEET NO. 58
123 SHEETS

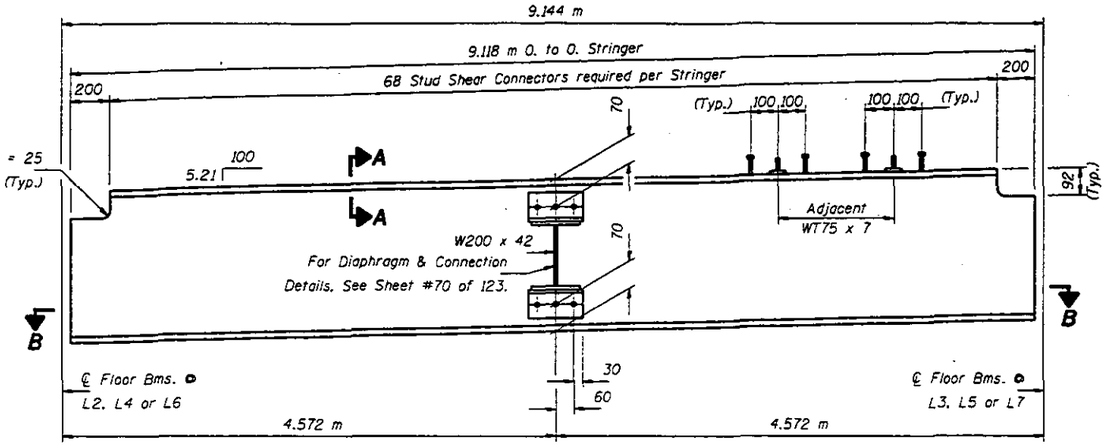

STRINGER S4 - SPAN #5

W460 x 60 (NTR)
(No. Required = 6)

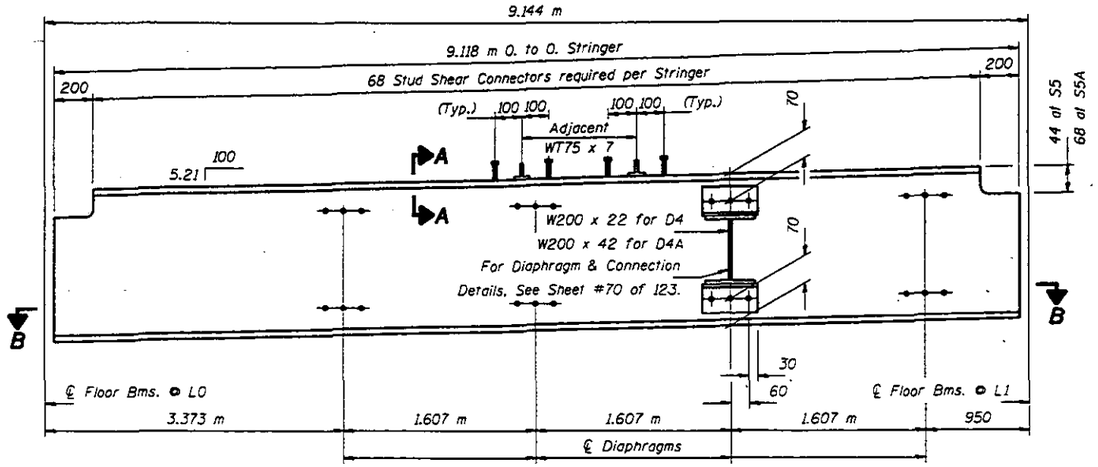

STRINGER S5 & S5A - SPAN #5

W460 x 60 (NTR)
(No. Required = 2 for S5 & 2 for S5A)

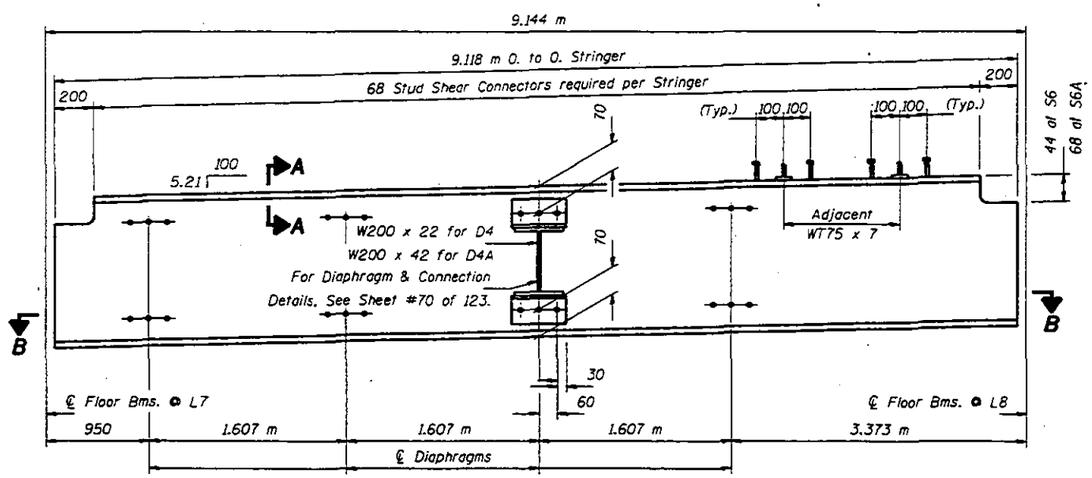

STRINGER S6 & S6A- SPAN #5

W460 x 60 (NTR)
(No. Required = 2 for S6 & 2 for S6A)

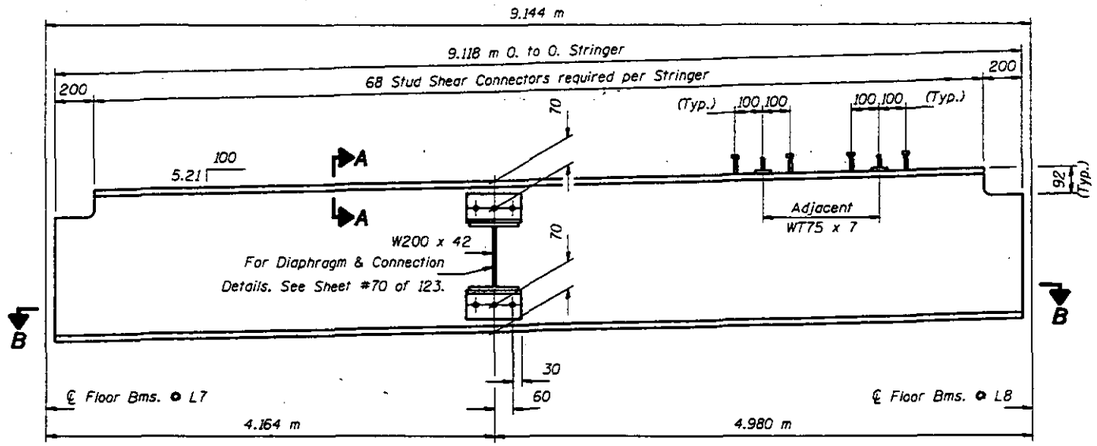

STRINGER S7 - SPAN #5

W460 x 60 (NTR)
(No. Required = 2)

Notes: For Sections A-A & B-B see sheet #69 of 123.
To facilitate field erection, stringer lengths are shorter than those taken from existing Fabrication Plans.
"NTR" denotes members to which Notch Toughness Requirements are applicable.
Hardened washers shall be required over all 24 mm ϕ holes.
All holes in the ends of the Stringer Webs shall be field drilled for end connections. See Floor Beam sheets #40 thru #44 of 123 for details. All other holes are shop drilled.
For Stringer locations see sheet #36 of 123.
Position Stringers S4, S5, S6 & S7 to maintain equal clearances from faces of floor beam webs at both ends.
After grid deck is installed on the Stringer, install stud shear connectors as shown. Place adjacent Stud Shear Connectors alternately as shown on Section A-A, see sheet #69 of 123.
Stringers shall be AASHTO M270M Grade 345. △1

DESIGNED	LSH
CHECKED	JLC TTBB
DRAWN	John F. Schneller Jr.
CHECKED	LSH TTBB

June 26, 1997
EXAMINED [signature] ENGINEER OF GENERAL DESIGN
PASSED [signature] ENGINEER OF BRIDGES AND STRUCTURES

STRINGER DETAILS
F.A.P. RT. 315 SEC. 140B-1-4
FULTON AND MASON COUNTIES
STA. 10+646.69

△1 Revised 7-16-97 STD

\projects\jfs00004\0630002e.dgn Jul. 21, 1997 12:46:17

16

STATE OF ILLINOIS
DEPARTMENT OF TRANSPORTATION

F.A.P. 315	140B-I-4	FULTON & MASON		

SHEET NO. 59
123 SHEETS

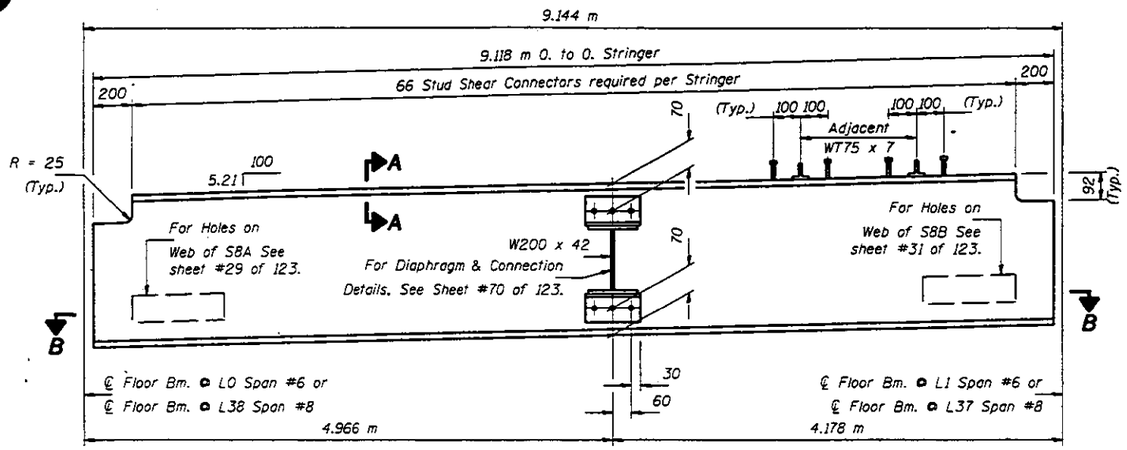

STRINGER S8, S8A & S8B - SPAN #6 & #8

W460 x 60 (NTR)
(No. Required = 2 for S8, 1 for S8A & 1 for S8B)

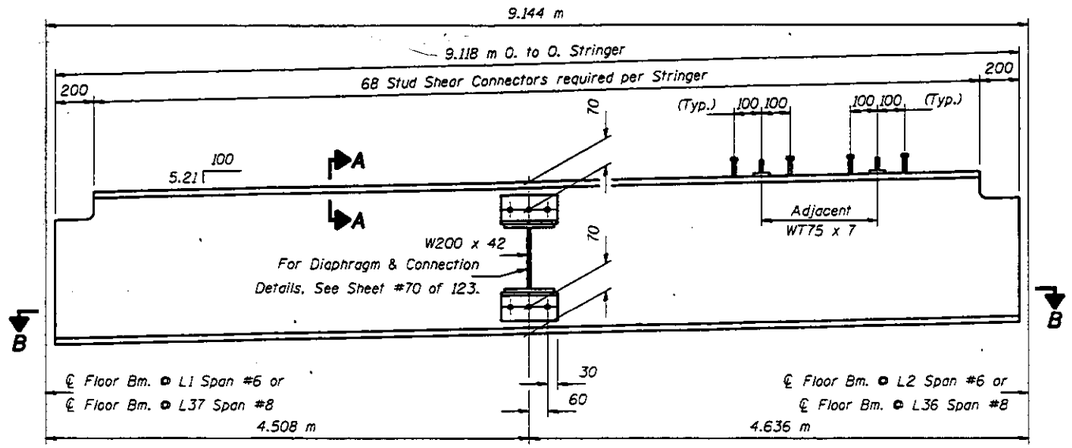

STRINGER S9 - SPAN #6 & #8

W460 x 60 (NTR)
(No. Required = 4)

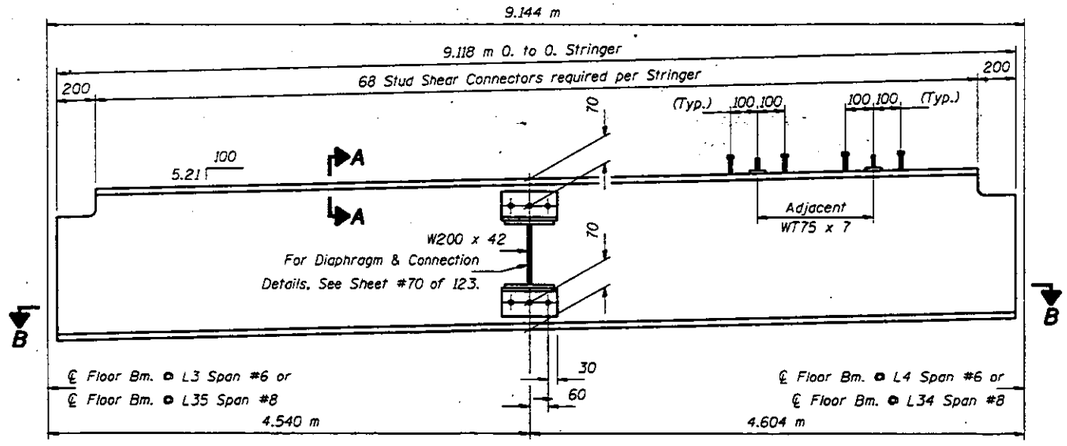

STRINGER S10 - SPAN #6 & #8

W460 x 60 (NTR)
(No. Required = 4)

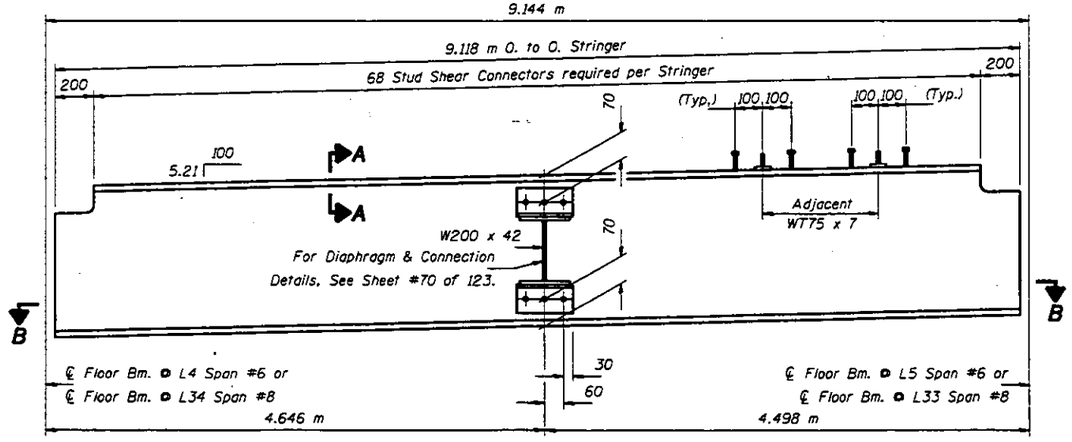

STRINGER S11 - SPAN #6 & #8

W460 x 60 (NTR)
(No. Required = 4)

Notes: For Sections A-A & B-B see sheet #69 of 123.
To facilitate field erection, stringer lengths are shorter than those taken from existing Fabrication Plans.
"NTR" denotes members to which Notch Toughness Requirements are applicable.
Hardered washers shall be required over all 24 mm ϕ holes.
All holes in the ends of the Stringer Webs shall be field drilled for end connections. See Floor Beam sheets #45 thru #48 & #56 of 123 for details. All other holes are shop drilled.
For Stringer locations see sheets #37 & #39 of 123.
Position Stringers S8, S9, S10 & S11 to maintain equal clearances from faces of floor beam webs at both ends.
After grid deck is installed on the Stringer, install stud shear connectors as shown. Place adjacent Stud Shear Connectors alternately as shown on Section A-A, see sheet #69 of 123.
Stringers shall be AASHTO M270M Grade 345. △1

DESIGNED	LSH
CHECKED	JLC TTBB
DRAWN	John F. Schneller Jr.
CHECKED	LSH TTBB

June 26, 1997
EXAMINED — ENGINEER OF BRIDGE DESIGN
PASSED — ENGINEER OF BRIDGES AND STRUCTURES

STRINGER DETAILS
F.A.P. RT. 315 SEC. 140B-I-4
FULTON AND MASON COUNTIES
STA. 10+646.69

△1 Revised 7-16-97 STD

STATE OF ILLINOIS
DEPARTMENT OF TRANSPORTATION

PROJECT NO.	SECTION	COUNTY	TOTAL SHEETS	SHEET NO.
F.A.P. 315	140B-I-4	FULTON & MASON		

SHEET NO. 60
123 SHEETS

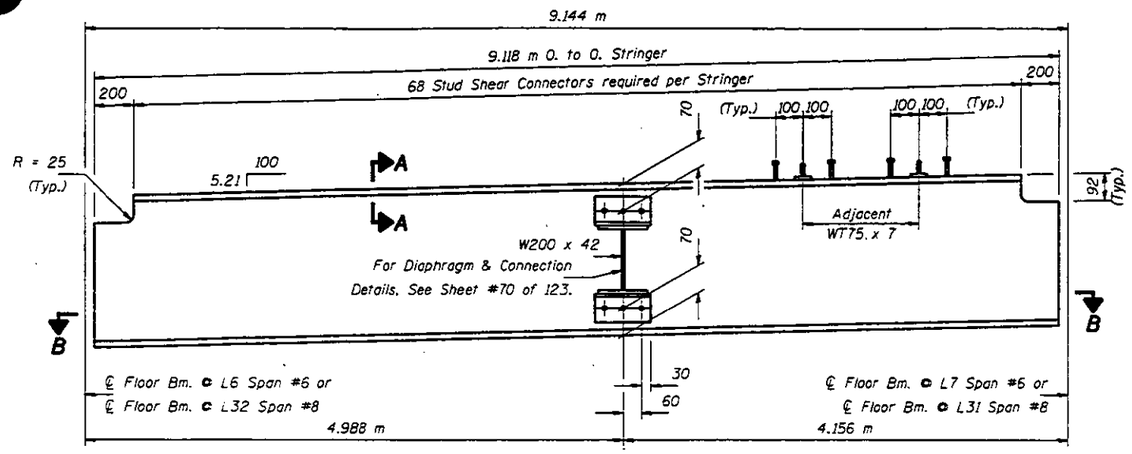

STRINGER S12 - SPAN #6 & #8

W460 x 60 (NTR)
(No. Required = 4)

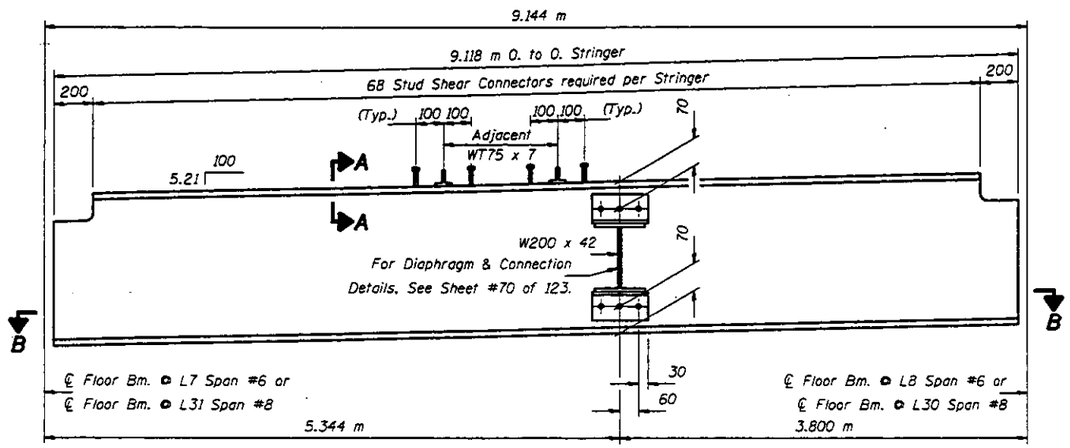

STRINGER S13 - SPAN #6 & #8

W460 x 60 (NTR)
(No. Required = 4)

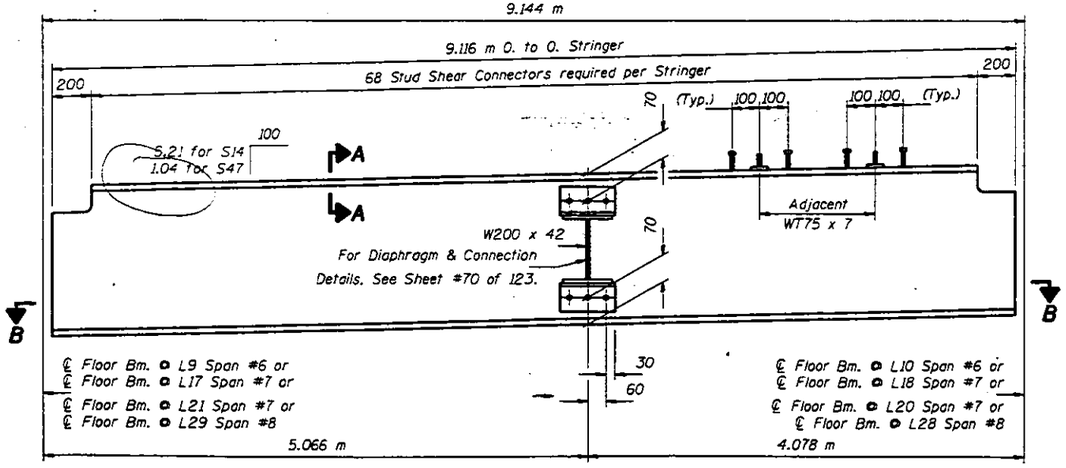

STRINGER S14 & S47 - SPAN #6, #7 & #8

W460 x 60 (NTR)
(No. Required = 4 for S14 & 4 for S47)

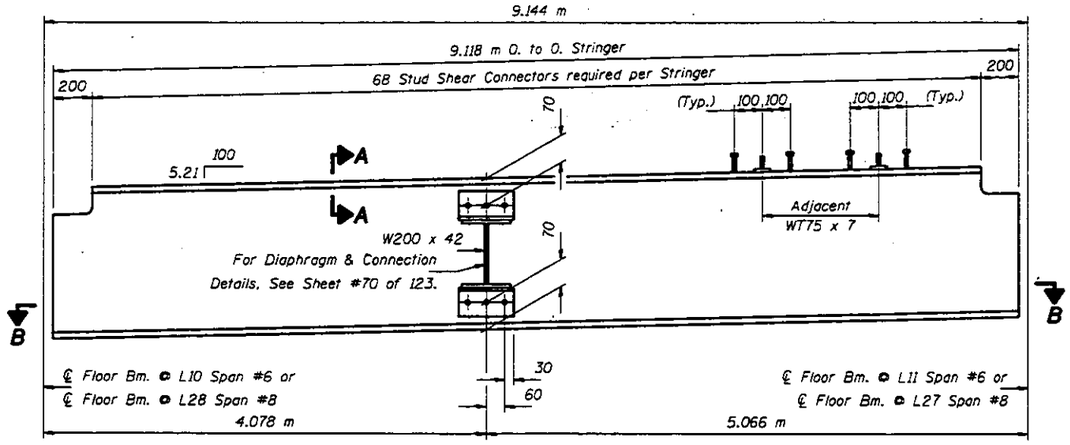

STRINGER S15 - SPAN #6 & #8

W460 x 60 (NTR)
(No. Required = 4)

Notes: For Sections A-A & B-B see sheet #69 of 123.
To facilitate field erection, stringer lengths are shorter than those taken from existing Fabrication Plans.
"NTR" denotes members to which Notch Toughness Requirements are applicable.
Hardered washers shall be required over all 24 mm ϕ holes.
All holes in the ends of the Stringer Webs shall be field drilled for end connections. See Floor Beam sheets #45 thru #55 of 123 for details. All other holes are shop drilled.
For Stringer locations see sheets #37 thru #39 of 123.
Position Stringers S12, S13, S14, S15 & S47 to maintain equal clearances from faces of floor beam webs at both ends.
After grid deck is installed on the Stringer, install stud shear connectors as shown. Place adjacent Stud Shear Connectors alternately as shown on Section A-A, see sheet #69 of 123.
Stringers shall be AASHTO M270M Grade 345. △1

DESIGNED	LSH
CHECKED	JLC TTBB
DRAWN	John F. Schueller Jr.
CHECKED	LSH TTBB

June 26, 1997
EXAMINED Greg L. Keeper — ENGINEER OF BRIDGE DESIGN
PASSED Ralph E. Anderson — ENGINEER OF BRIDGES AND STRUCTURES

STRINGER DETAILS
F.A.P. RT. 315 SEC. 140B-I-4
FULTON AND MASON COUNTIES
STA. 10+646.69

△1 Revised 7-16-97 STD

\projects\jfs00004\0630002e.dgn Jul. 21, 1997 12:46:45

STATE OF ILLINOIS
DEPARTMENT OF TRANSPORTATION

ROUTE NO.	SECTION	COUNTY	TOTAL SHEETS	SHEET NO.
F.A.P. 315	140B-1-4	FULTON & MASON		
FED. ROAD DIST. NO. 7	ILLINOIS	FED. AID PROJECT		

SHEET NO. 61
123 SHEETS

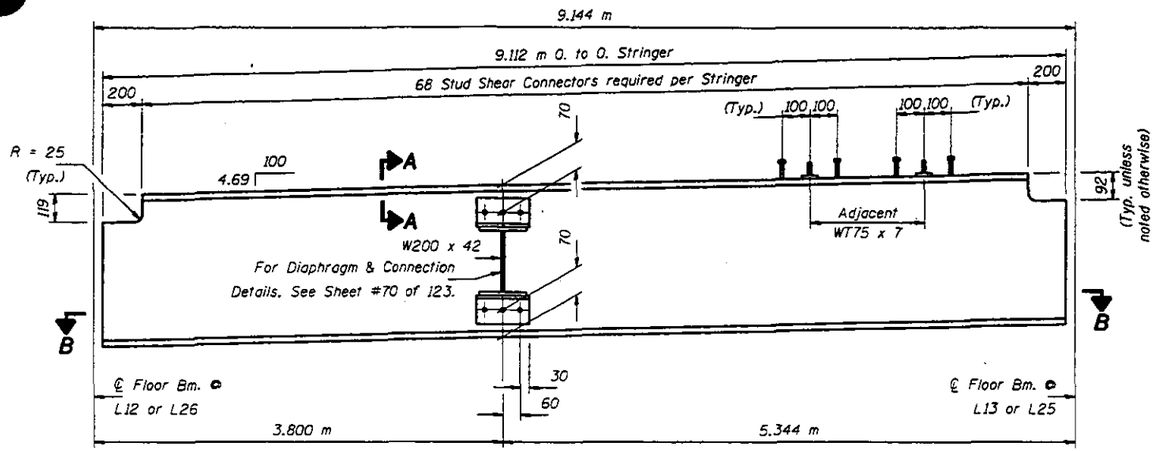

STRINGER S16 - SPAN #7
W460 x 60 (NTR)
(No. Required = 4)

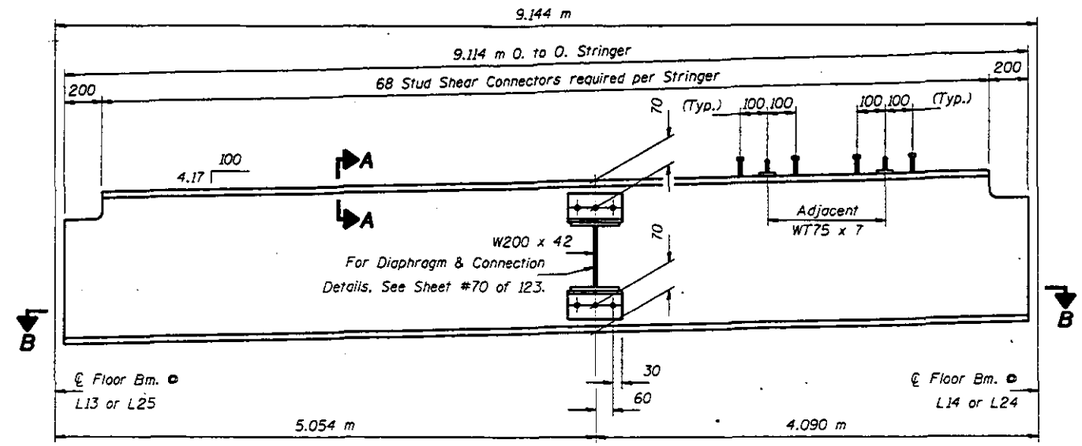

STRINGER S17 - SPAN #7
W460 x 60 (NTR)
(No. Required = 4)

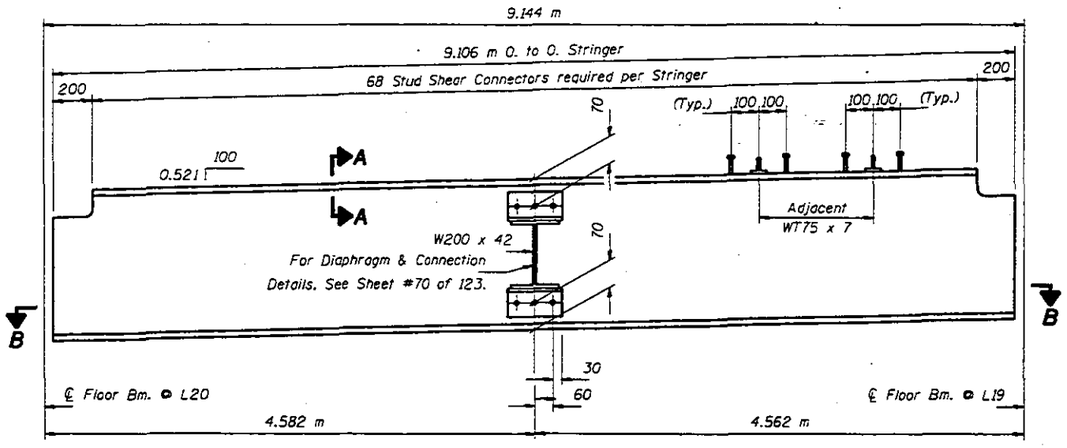

STRINGER S18 - SPAN #7
W460 x 60 (NTR)
(No. Required = 2)

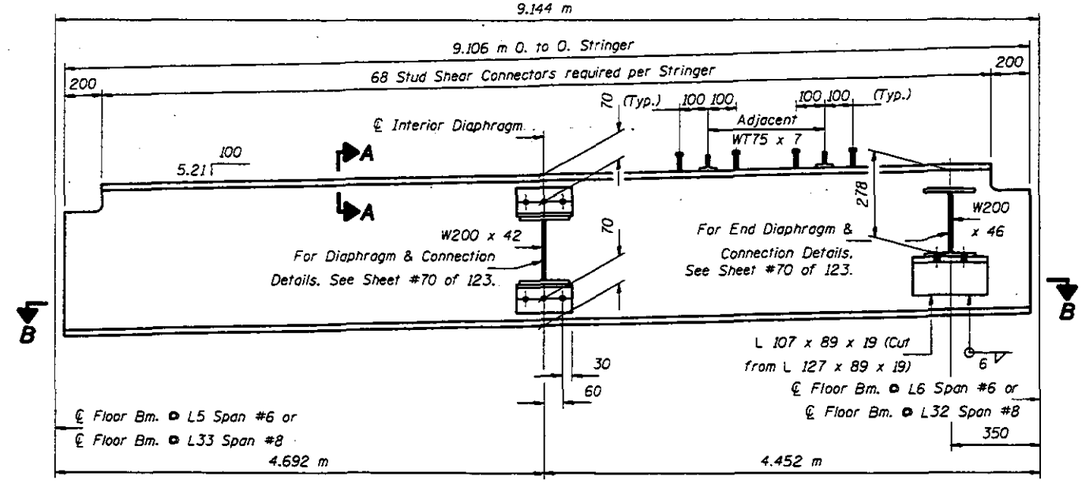

STRINGER S19 - SPAN #6 & #8
W460 x 60 (NTR)
(No. Required = 4)

Notes: For Sections A-A & B-B see sheet #69 of 123.
To facilitate field erection, stringer lengths are shorter than those taken from existing Fabrication Plans.
"NTR" denotes members to which Notch Toughness Requirements are applicable.
Hardered washers shall be required over all 24 mm ϕ holes.
All holes in the ends of the Stringer Webs shall be field drilled for end connections. See Floor Beam sheets #45 thru #55 of 123 for details. All other holes are shop drilled.
For Stringer locations see sheets #37 thru #39 of 123.
Position Stringers S16, S17 & S18 to maintain equal clearances from faces of floor beam webs at both ends.
Position Stringers S19 by placing Stringer end (end which is to have field drilled holes on Stringer Web) to maintain 12 mm clearance from face of Floor Beam Web.
After grid deck is installed on the Stringer, install stud shear connectors as shown. Place adjacent Stud Shear Connectors alternately as shown on Section A-A, see sheet #69 of 123.
Stringers shall be AASHTO M270M Grade 345. △1

DESIGNED	LSH
CHECKED	JLC TTBB
DRAWN	John F. Schneller Jr.
CHECKED	LSH TTBB

June 26, 1997
EXAMINED — ENGINEER OF BRIDGE DESIGN
PASSED — ENGINEER OF BRIDGES AND STRUCTURES

STRINGER DETAILS
F.A.P. RT. 315 SEC. 140B-I-4
FULTON AND MASON COUNTIES
STA. 10+646.69

△1 Revised 7-16-97 STD

projects\jfs00004\0630002e.dgn Jul. 21, 1997 12:46:56

14

STATE OF ILLINOIS
DEPARTMENT OF TRANSPORTATION

ROUTE NO.	SECTION	COUNTY	TOTAL SHEETS	SHEET NO.
F.A.P. 315	140B-I-4	FULTON & MASON		
FED. ROAD DIST. NO. 7	ILLINOIS	FED. AID PROJECT-		

SHEET NO. 62
123 SHEETS

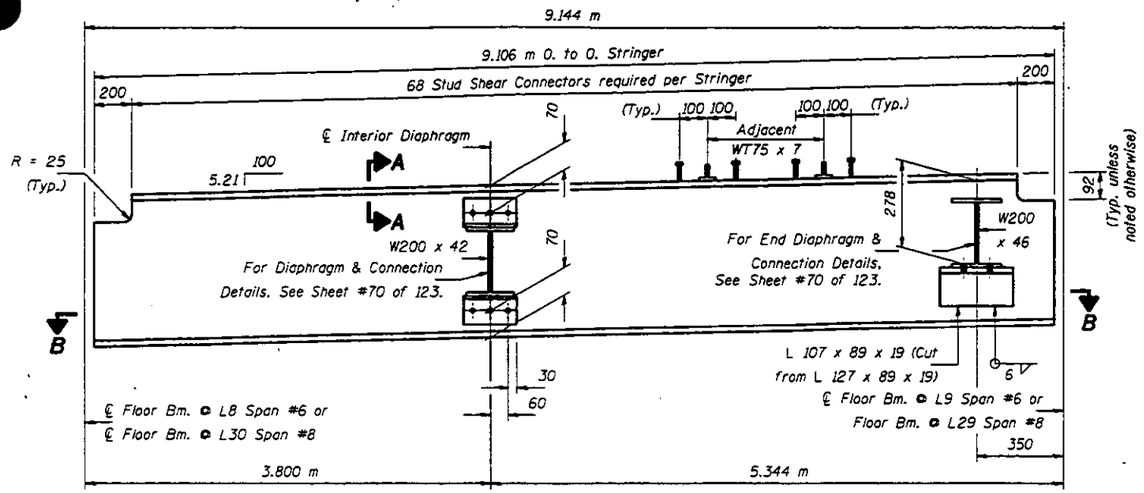

STRINGER S20 - SPAN #6 & #8
W460 x 60 (NTR)
(No. Required = 4)

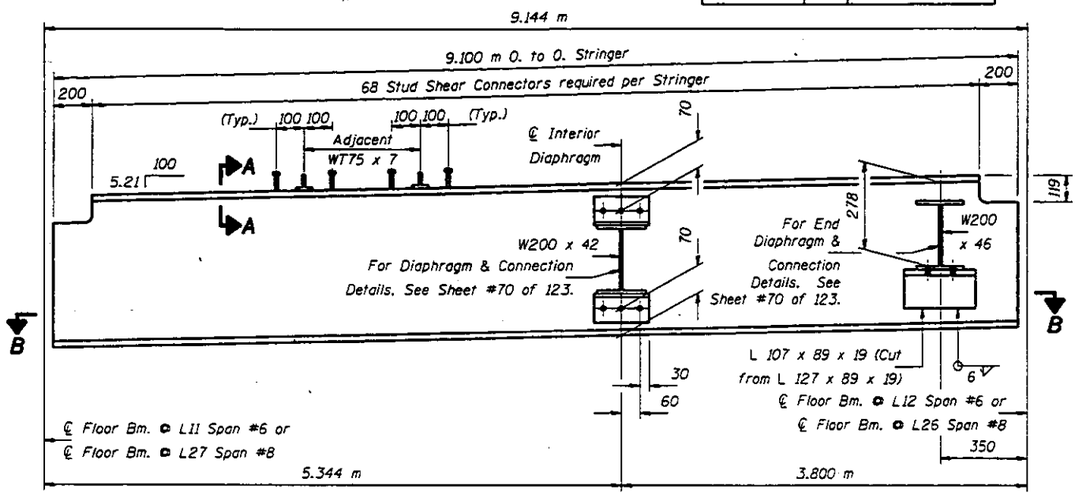

STRINGER S21 - SPAN #6 & #8
W460 x 60 (NTR)
(No. Required = 4)

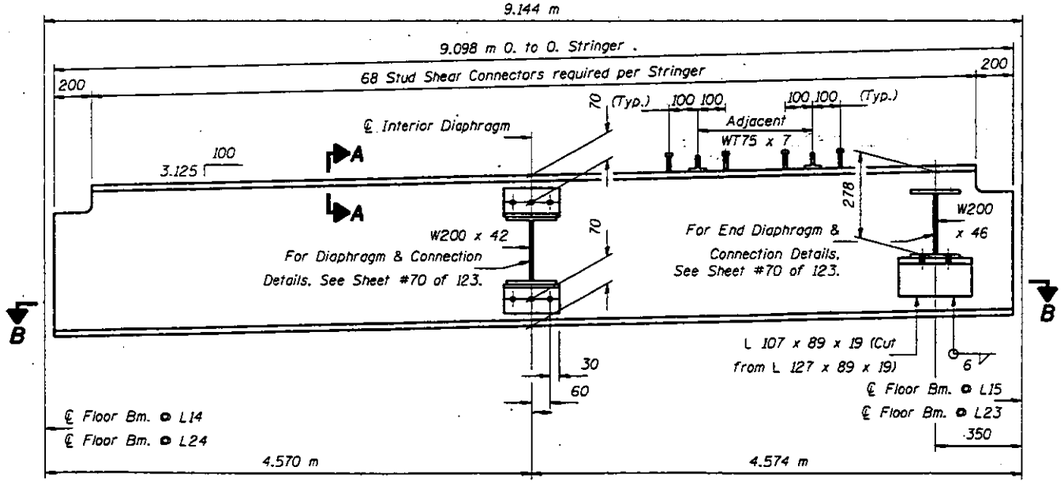

STRINGER S22 - SPAN #7
W460 x 60 (NTR)
(No. Required = 4)

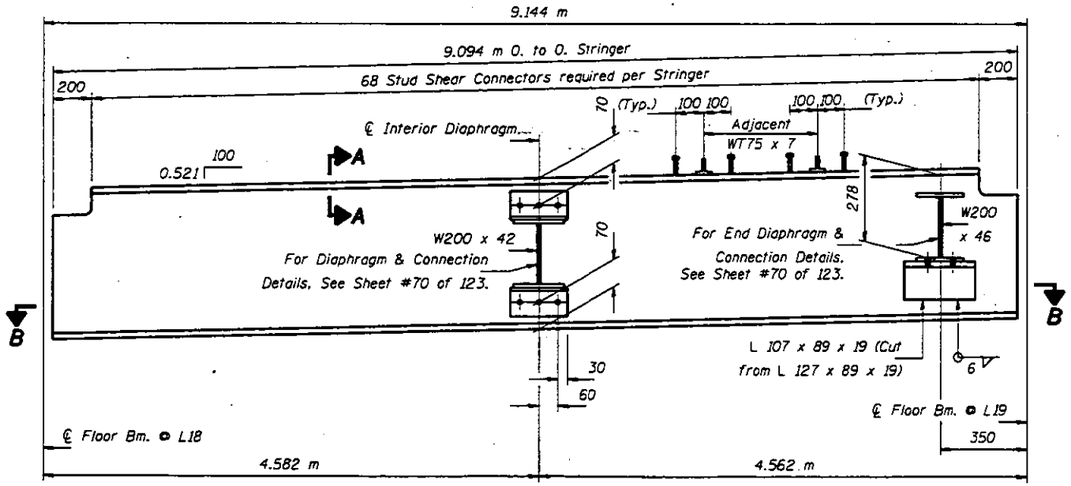

STRINGER S23 - SPAN #7
W460 x 60 (NTR)
(No. Required = 2)

Notes: For Sections A-A & B-B see sheet #69 of 123.
To facilitate field erection, stringer lengths are shorter than those taken from existing Fabrication Plans.
"NTR" denotes members to which Notch Toughness Requirements are applicable.
Hardered washers shall be required over all 24 mm ϕ holes.
All holes in the ends of the Stringer Webs shall be field drilled for end connections. See Floor Beam sheets #45 thru #55 of 123 for details. All other holes are shop drilled.
For Stringer locations see sheets #37 thru #39 of 123.
Position Stringers S20, S21, S22 & S23 by placing Stringer end (end which is to have field drilled holes on Stringer Web) to maintain 12 mm clearance from face of Floor Beam Web.
After grid deck is installed on the Stringer, install stud shear connectors as shown. Place adjacent Stud Shear Connectors alternately as shown on Section A-A, see sheet #69 of 123.
Stringers shall be AASHTO M270M Grade 345. △1

DESIGNED	LSH
CHECKED	JLC TTBB
DRAWN	John F. Schneller Jr.
CHECKED	LSH TTBB

June 26, 1997
EXAMINED Raj. D. Kapur
ENGINEER OF BRIDGE DESIGN
PASSED Robert E. Cunningham
ENGINEER OF BRIDGES AND STRUCTURES

STRINGER DETAILS
F.A.P. RT. 315 SEC. 140B-I-4
FULTON AND MASON COUNTIES
STA. 10+646.69

△1 Revised 7-16-97 STD

STATE OF ILLINOIS
DEPARTMENT OF TRANSPORTATION

F.A.P. 315	140B-I-4	FULTON & MASON		

SHEET NO. 63
123 SHEETS

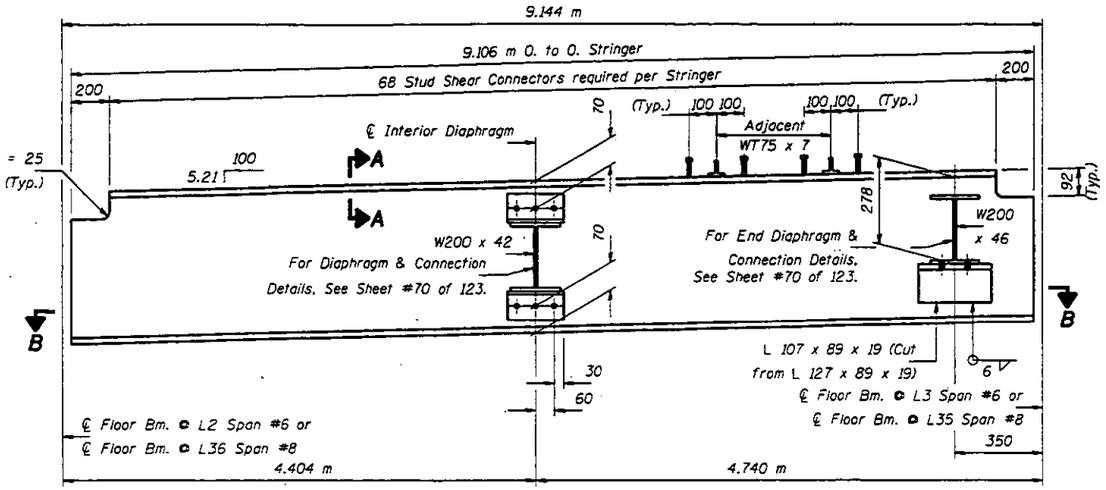

STRINGER S24 - SPAN #6 & #8

W460 x 60 (NTR)
(No. Required = 4)

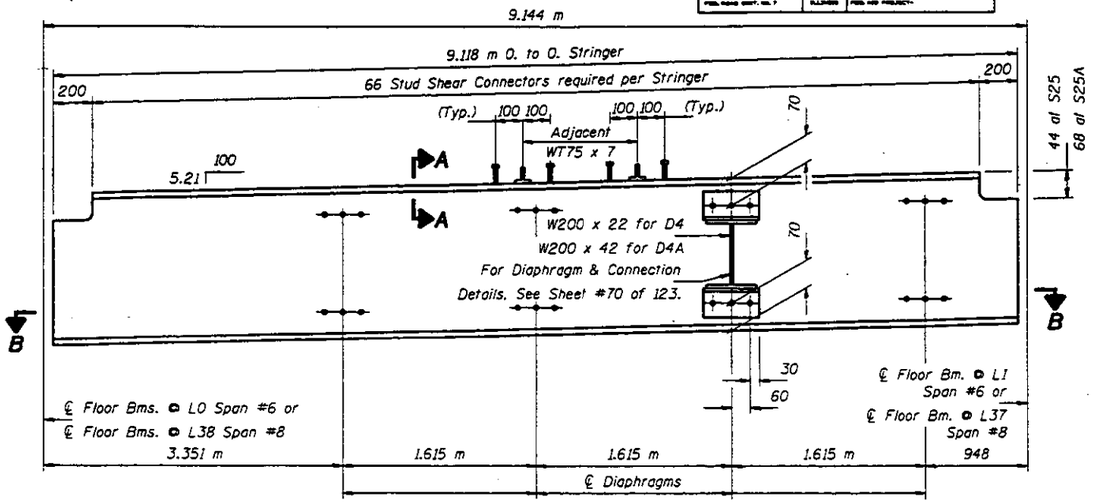

STRINGER S25 & S25A - SPAN #6 & #8

W460 x 60 (NTR)
(No. Required = 4 for S25 & 4 for S25A)

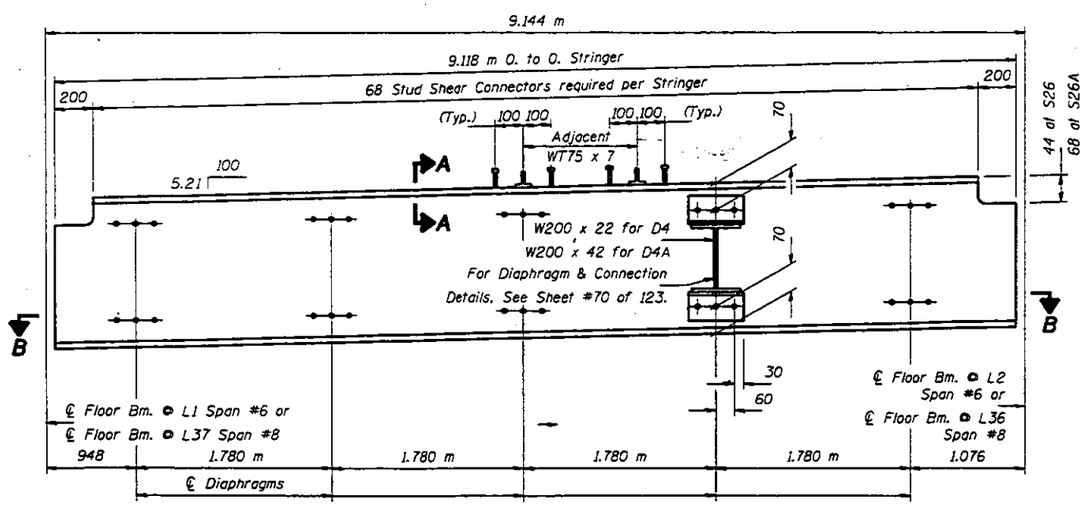

STRINGER S26 & S26A - SPAN #6 & #8

W460 x 60 (NTR)
(No. Required = 4 for S26 & 4 for S26A)

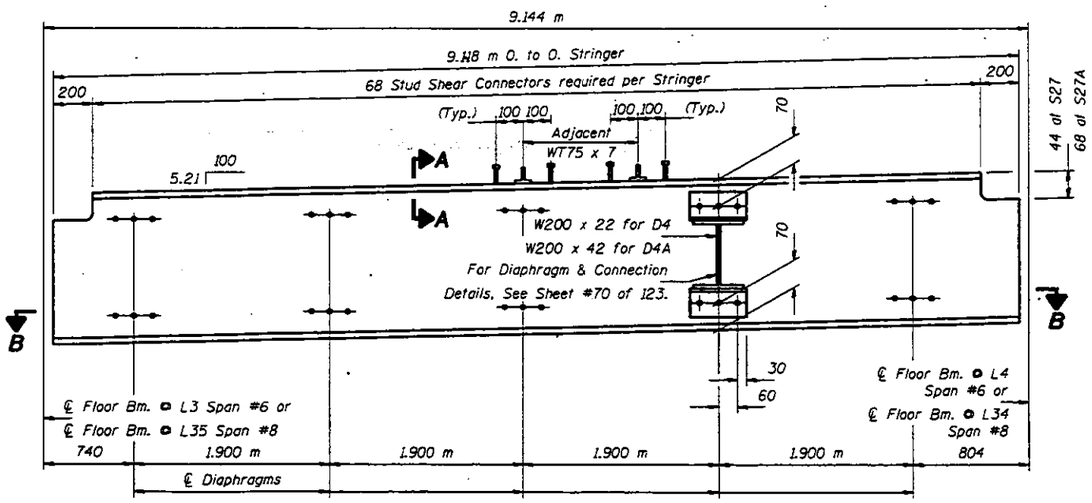

STRINGER S27 & S27A - SPAN #6 & #8

W460 x 60 (NTR)
(No. Required = 4 for S27 & 4 for S27A)

Notes: For Sections A-A & B-B see sheet #69 of 123.
To facilitate field erection, stringer lengths are shorter than those taken from existing Fabrication Plans.
"NTR" denotes members to which Notch Toughness Requirements are applicable.
Hardered washers shall be required over all 24 mm ϕ holes.
All holes in the ends of the Stringer Webs shall be field drilled for end connections. See Floor Beam sheets #45 thru #48 & #56 of 123 for details. All other holes are shop drilled.
For Stringer locations see sheets #37 & #39 of 123.
Position Stringers S25, S26 & S27 to maintain equal clearances from faces of floor beam webs at both ends.
Position Stringers S24 by placing Stringer end (end which is to have field drilled holes on Stringer Web) to maintain 12 mm clearance from face of Floor Beam Web.
After grid deck is installed on the Stringer, install stud shear connectors as shown. Place adjacent Stud Shear Connectors alternately as shown on Section A-A, see sheet #69 of 123.
Stringers shall be AASHTO M270M Grade 345. △1

DESIGNED	LSH
CHECKED	JLC TTBB
DRAWN	John F. Schneller Jr.
CHECKED	LSH TTBB

June 26, 1997
EXAMINED Engineer of Bridge Design
PASSED Engineer of Bridges and Structures

STRINGER DETAILS
F.A.P. RT. 315 SEC. 140B-I-4
FULTON AND MASON COUNTIES
STA. 10+646.69

△1 Revised 7-16-97 STD

28

\projects\jfs00004\0630002e.dgn Jul. 21, 1997 12:47:15

STATE OF ILLINOIS
DEPARTMENT OF TRANSPORTATION

ROUTE NO.	SECTION	COUNTY	TOTAL SHEETS	SHEET NO.
F.A.P. 315	140B-1-4	FULTON & MASON		
FED. ROAD DIST. NO. 7	ILLINOIS	FED. AID PROJECT-		

SHEET NO. 64
123 SHEETS

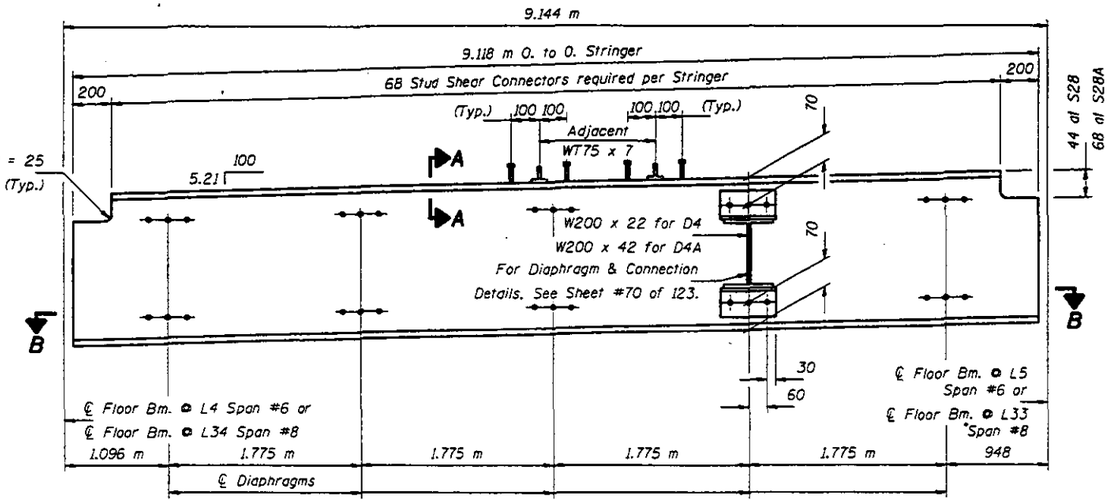

STRINGER S28 & S28A - SPAN #6 & #8

W460 x 60 (NTR)
(No. Required = 4 for S28 & 4 for S28A)

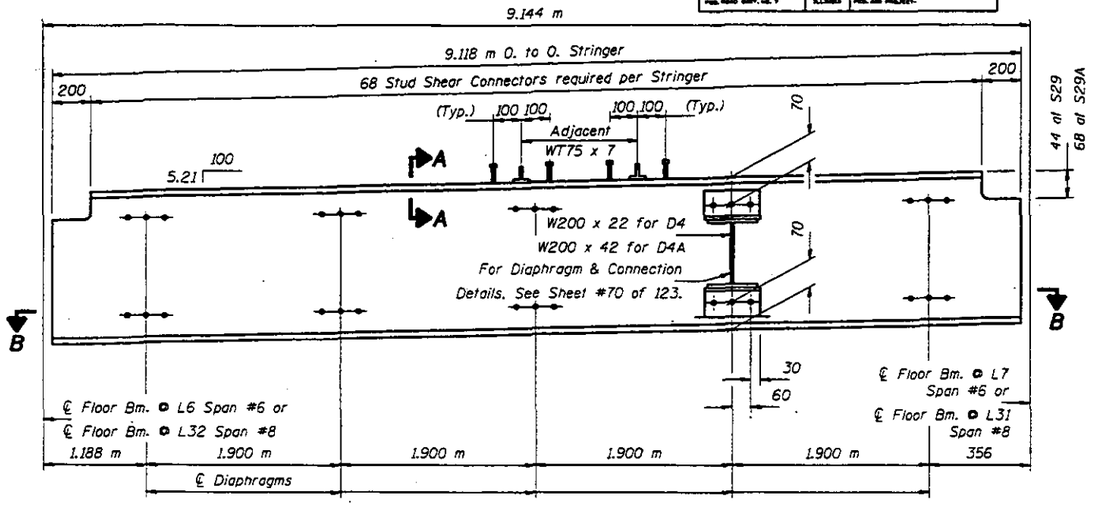

STRINGER S29 & S29A - SPAN #6 & #8

W460 x 60 (NTR)
(No. Required = 4 for S29 & 4 for S29A)

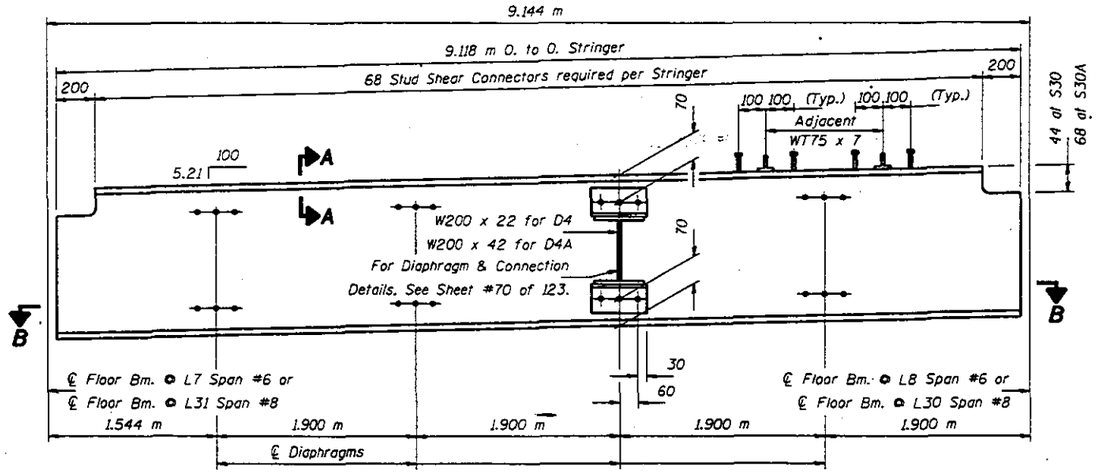

STRINGER S30 & S30A - SPAN #6 & #8

W460 x 60 (NTR)
(No. Required = 4 for S30 & 4 for S30A)

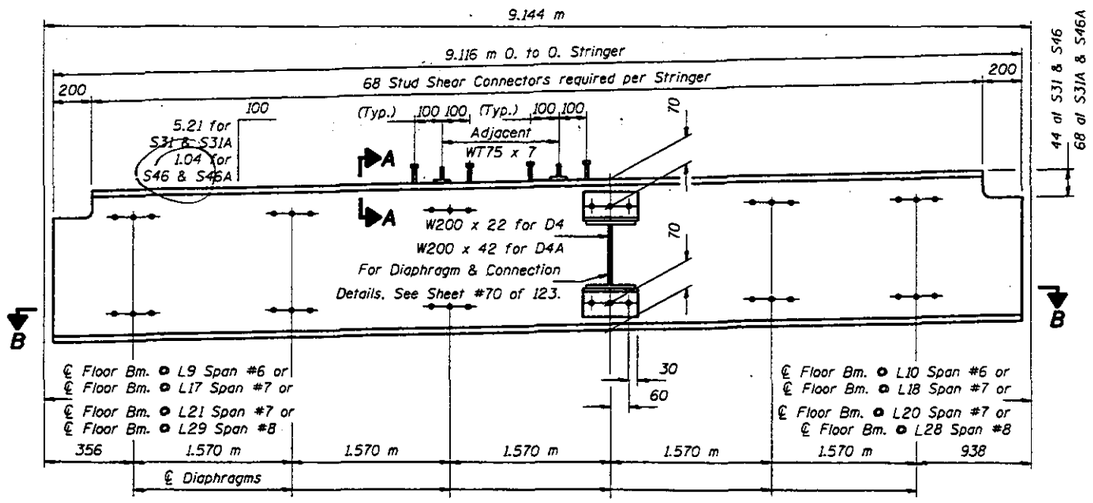

STRINGER S31, S31A, S46 & S46A - SPAN #6, #7 & #8

W460 x 60 (NTR)
(No. Required = 4 for S31 & 4 for S31A)
(No. Required = 4 for S46 & 4 for S46A)

Notes: For Sections A-A & B-B see sheet #69 of 123.
To facilitate field erection, stringer lengths are shorter than those taken from existing Fabrication Plans.
"NTR" denotes members to which Notch Toughness Requirements are applicable.
Hardened washers shall be required over all 24 mm ϕ holes.
All holes in the ends of the Stringer Webs shall be field drilled for end connections. See Floor Beam sheets #45 thru #55 of 123 for details. All other holes are shop drilled.
For Stringer locations see sheets #37 thru #39 of 123.
Position Stringers S28, S29, S30 & S31 to maintain equal clearances from faces of floor beam webs at both ends.
After grid deck is installed on the Stringer, install stud shear connectors as shown. Place adjacent Stud Shear Connectors alternately as shown on Section A-A, see sheet #69 of 123.
Stringers shall be AASHTO M270M Grade 345. △1

SIGNED	LSH
CHECKED	JLC TTBB
DRAWN	John F. Schneller Jr.
CHECKED	LSH TTBB

June 26, 1997
EXAMINED Greg J. Klaeser ENGINEER OF BRIDGE DESIGN
PASSED Ralph E. Anderson ENGINEER OF BRIDGES AND STRUCTURES

STRINGER DETAILS
F.A.P. RT. 315 SEC. 140B-I-4
FULTON AND MASON COUNTIES
STA. 10+646.69

△1 Revised 7-16-97 STD

STATE OF ILLINOIS
DEPARTMENT OF TRANSPORTATION

ROUTE NO.	SECTION	COUNTY	TOTAL SHEETS	SHEET NO.
F.A.P. 315	140B-I-4	FULTON & MASON		
FED. ROAD DIST. NO. 7	ILLINOIS	FED. AID PROJECT-		

SHEET NO. 65
123 SHEETS

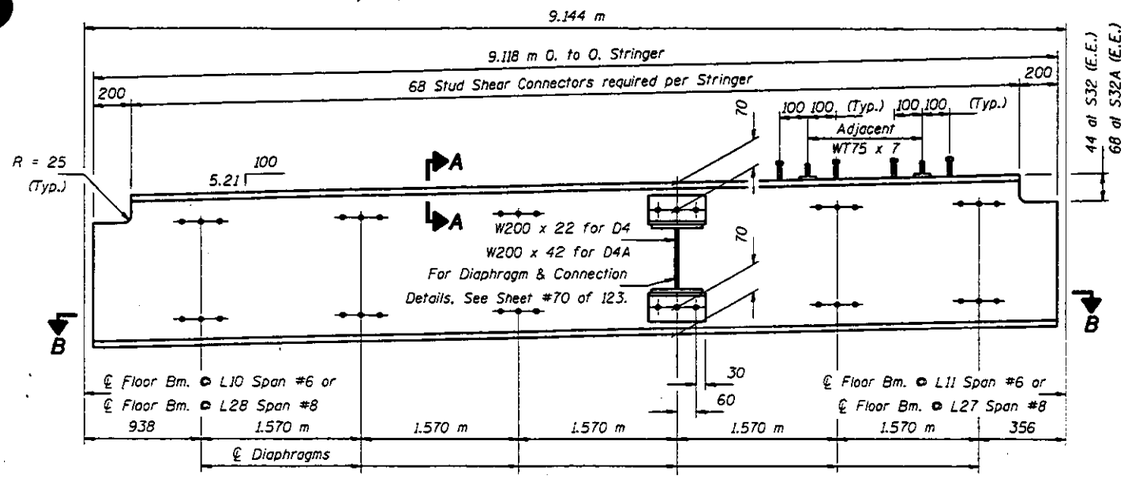

STRINGER S32 & S32A - SPAN #6 & #8

W460 x 60 (NTR)
(No. Required = 4 for S32 & 4 for S32A)

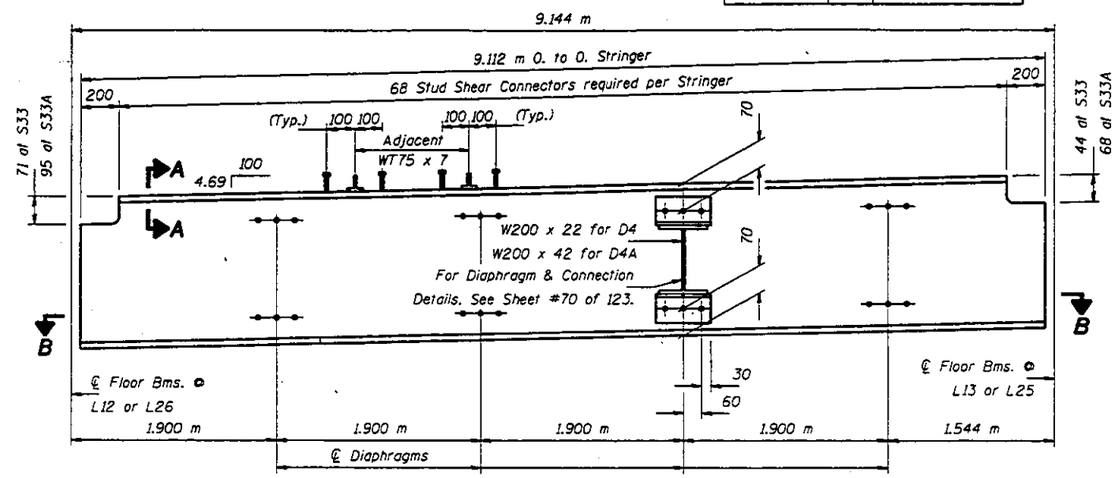

STRINGER S33 & S33A - SPAN #7

W460 x 60 (NTR)
(No. Required = 4 for S33 & 4 for S33A)

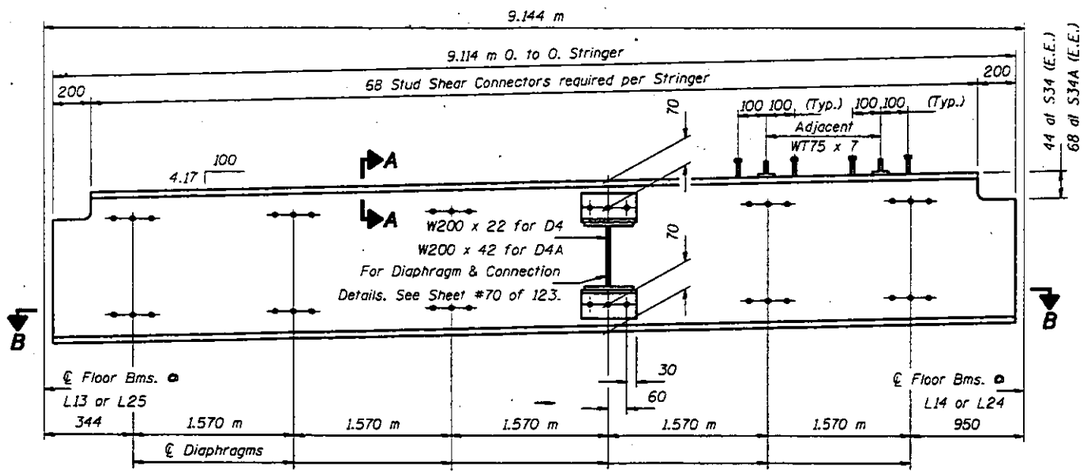

STRINGER S34 & S34A - SPAN #7

W460 x 60 (NTR)
(No. Required = 4 for S34 & 4 for S34A)

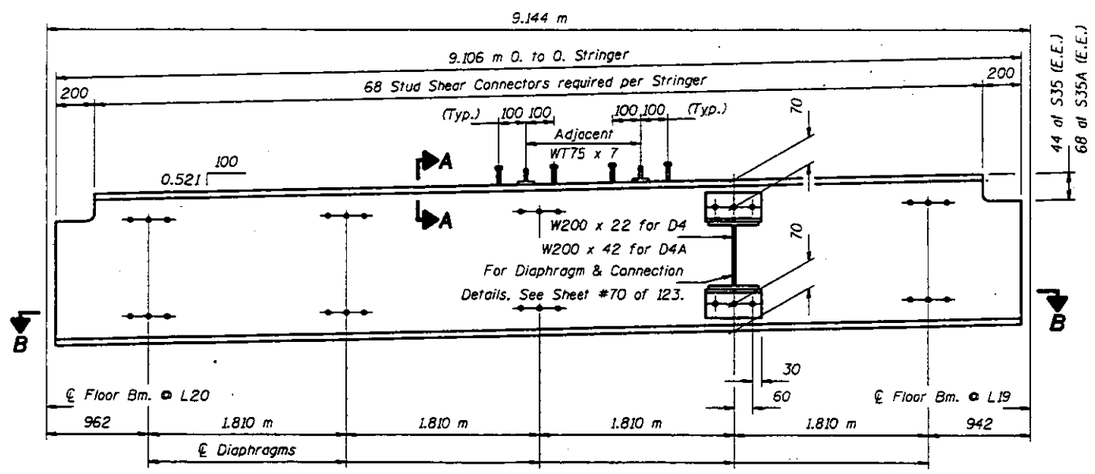

STRINGER S35 & S35A - SPAN #7

W460 x 60 (NTR)
(No. Required = 2 for S35 & 2 for S35A)

Notes: For Sections A-A & B-B see sheet #69 of 123.
To facilitate field erection, stringer lengths are shorter than those taken from existing Fabrication Plans.
"NTR" denotes members to which Notch Toughness Requirements are applicable.
Hardened washers shall be required over all 24 mm ϕ holes.
All holes in the ends of the Stringer Webs shall be field drilled for end connections. See Floor Beam sheets #45 thru #55 of 123 for details. All other holes are shop drilled.
For Stringer locations see sheets #37 thru #39 of 123.
Position Stringers S32, S33, S34 & S35 to maintain equal clearances from faces of floor beam webs at both ends.
After grid deck is installed on the Stringer, install stud shear connectors as shown. Place adjacent Stud Shear Connectors alternately as shown on Section A-A, see sheet #69 of 123.
Stringers shall be AASHTO M270M Grade 345. △1

DESIGNED	LSH
CHECKED	JLC TTBB
DRAWN	John F. Schneller Jr.
CHECKED	LSH TTBB

June 26, 1997
EXAMINED Engr. of Bridge Design
PASSED Ralph E. Anderson
Engineer of Bridges and Structures

STRINGER DETAILS
F.A.P. RT. 315 SEC. 140B-I-4
FULTON AND MASON COUNTIES
STA. 10+646.69

△1 Revised 7-16-97 STD

28

\projects\jfs00004\0630002e.dgn Jul. 21, 1997 12:47:35

STATE OF ILLINOIS
DEPARTMENT OF TRANSPORTATION

ROUTE NO.	SECTION	COUNTY	TOTAL SHEETS	SHEET NO.
F.A.P. 315	140B-1-4	FULTON & MASON		

SHEET NO. 66
123 SHEETS

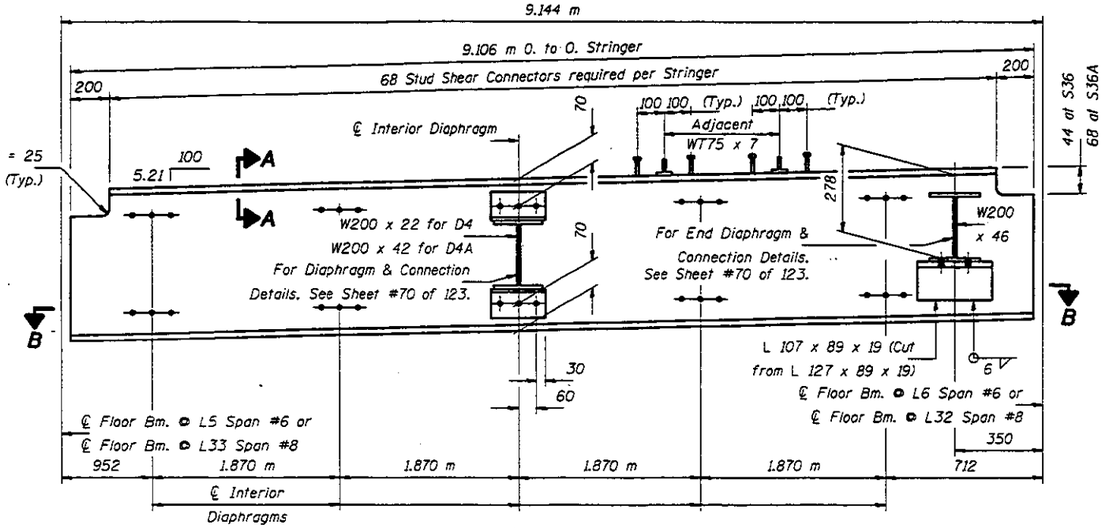

STRINGER S36 & S36A - SPAN #6 & #8

W460 x 60 (NTR)
(No. Required = 4 for S36 & 4 for S36A)

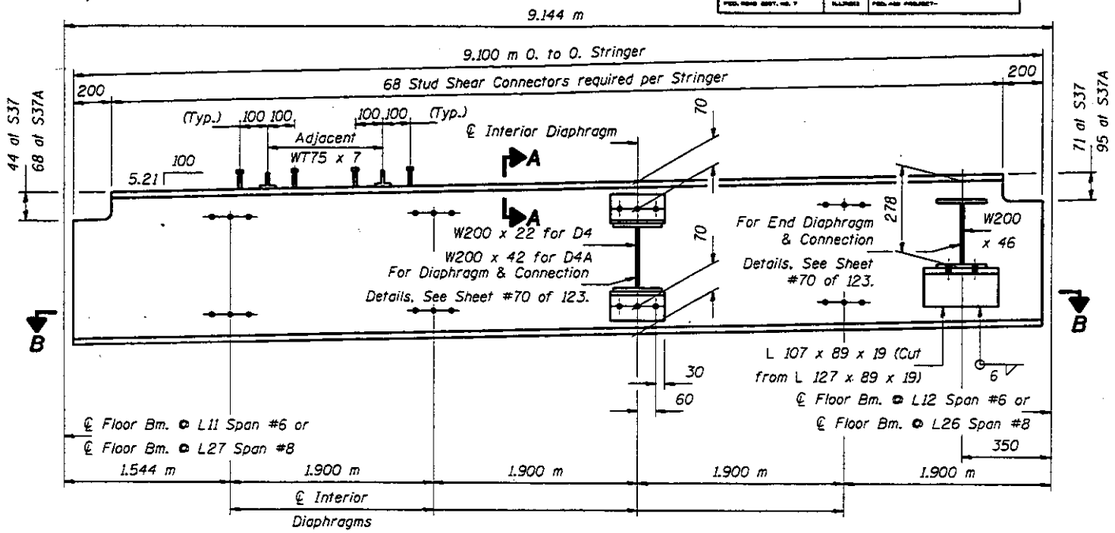

STRINGER S37 & S37A - SPAN #6 & #8

W460 x 60 (NTR)
(No. Required = 4 for S37 & 4 for S37A)

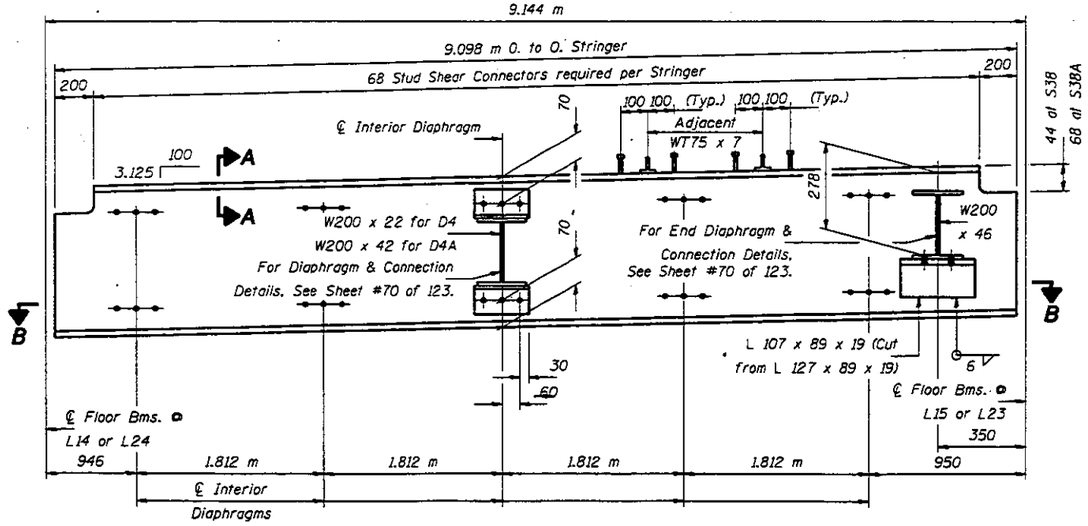

STRINGER S38 & S38A - SPAN #7

W460 x 60 (NTR)
(No. Required = 4 for S38 & 4 for A38A)

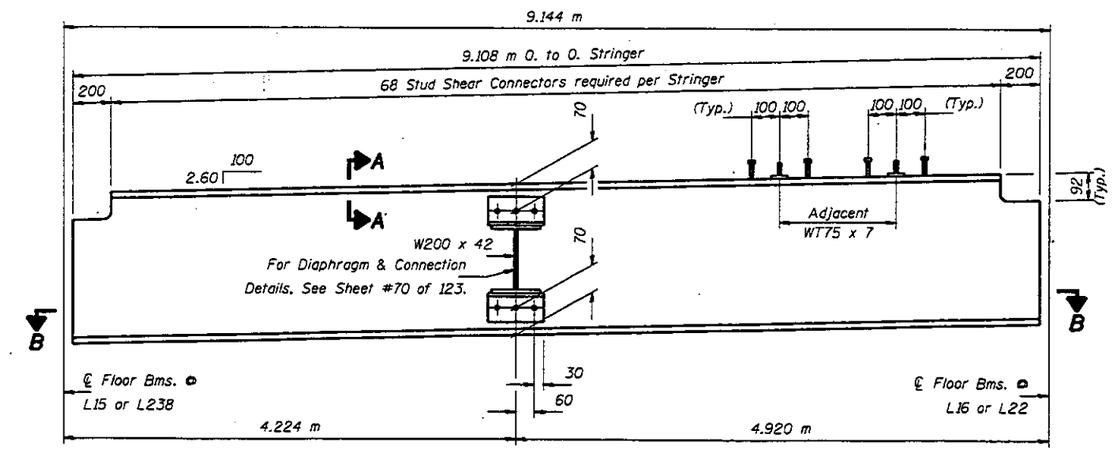

STRINGER S39 - SPAN #7

W460 x 60 (NTR)
(No. Required = 4)

Notes: For Sections A-A & B-B see sheet #69 of 123.
To facilitate field erection, stringer lengths are shorter than those taken from existing Fabrication Plans.
"NTR" denotes members to which Notch Toughness Requirements are applicable.
Hardened washers shall be required over all 24 mm ϕ holes.
All holes in the ends of the Stringer Webs shall be field drilled for end connections. See Floor Beam sheets #45 thru #55 of 123 for details. All other holes are shop drilled.
For Stringer locations see sheets #37 thru #39 of 123.
Position Stringers S39 to maintain equal clearances from faces of floor beam webs at both ends.
Position Stringers S36, S37 & S38 by placing Stringer end (end which is to have field drilled holes on Stringer Web) to maintain 12 mm clearance from face of Floor Beam Web.
After grid deck is installed on the Stringer, install stud shear connectors as shown. Place adjacent Stud Shear Connectors alternately as shown on Section A-A, see sheet #69 of 123.
Stringers shall be AASHTO M270M Grade 345. △1

SIGNED	LSH
CHECKED	JLC TTBB
DRAWN	John F. Schneller Jr.
CHECKED	LSH TTBB

June 26, 1997
EXAMINED Craig L. Kasper ENGINEER OF BRIDGE DESIGN
PASSED Ralph E. Anderson ENGINEER OF BRIDGES AND STRUCTURES

STRINGER DETAILS
F.A.P. RT. 315 SEC. 140B-I-4
FULTON AND MASON COUNTIES
STA. 10+646.69

△1 Revised 7-16-97 STD

\projects\jfs00004\0630002e.dgn Jul. 21, 1997 12:47:47

18

STATE OF ILLINOIS
DEPARTMENT OF TRANSPORTATION

ROUTE NO.	SECTION	COUNTY	TOTAL SHEETS	SHEET NO.
F.A.P. 315	140B-1-4	FULTON & MASON		
FED. ROAD DIST. NO. 7	ILLINOIS	FED. AID PROJECT-		

SHEET NO. 67
123 SHEETS

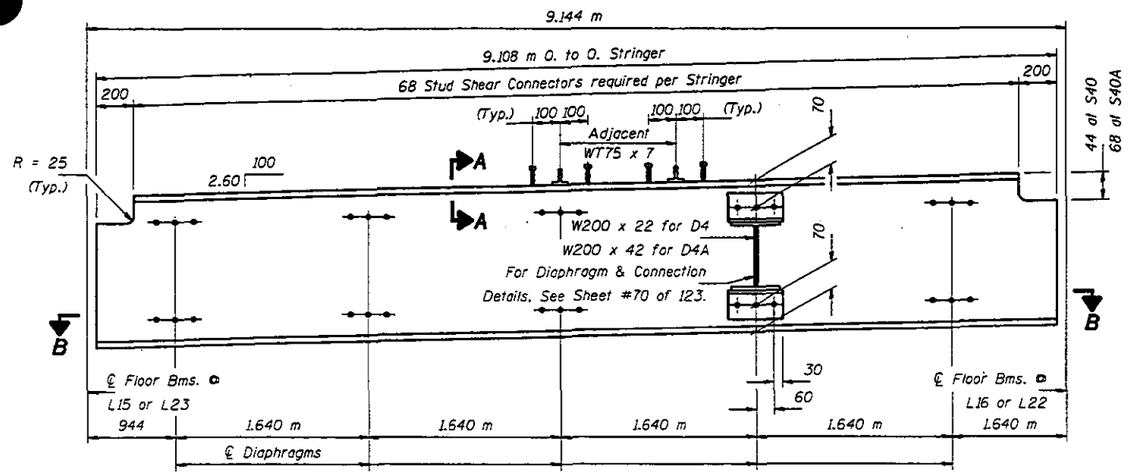

STRINGER S40 & S40A - SPAN #7

W460 x 60 (NTR)
(No. Required = 4 for S40 & 4 for S40A)

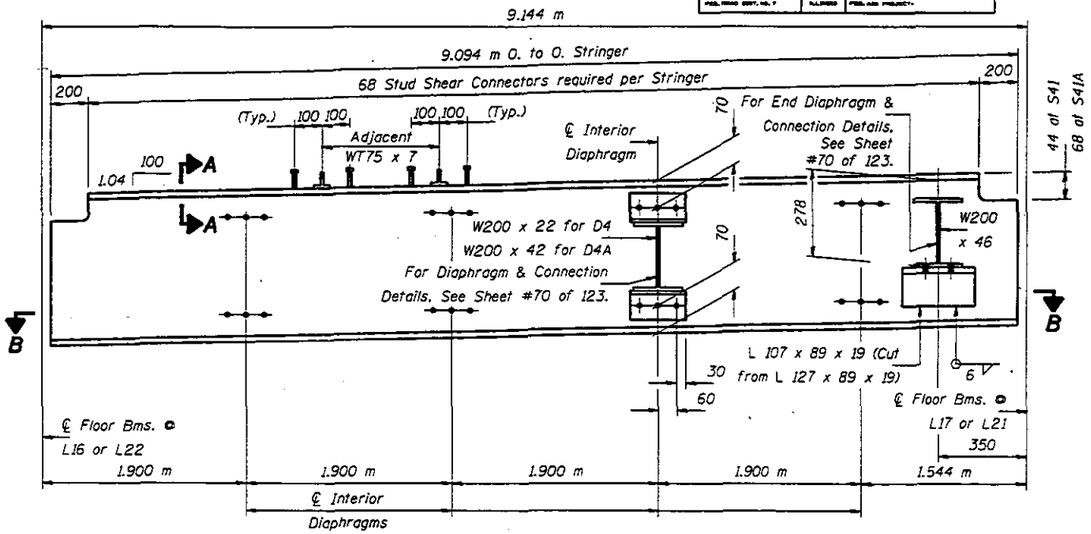

STRINGER S41 & S41A - SPAN #7

W460 x 60 (NTR)
(No. Required = 4 for S41 & 4 for S41A)

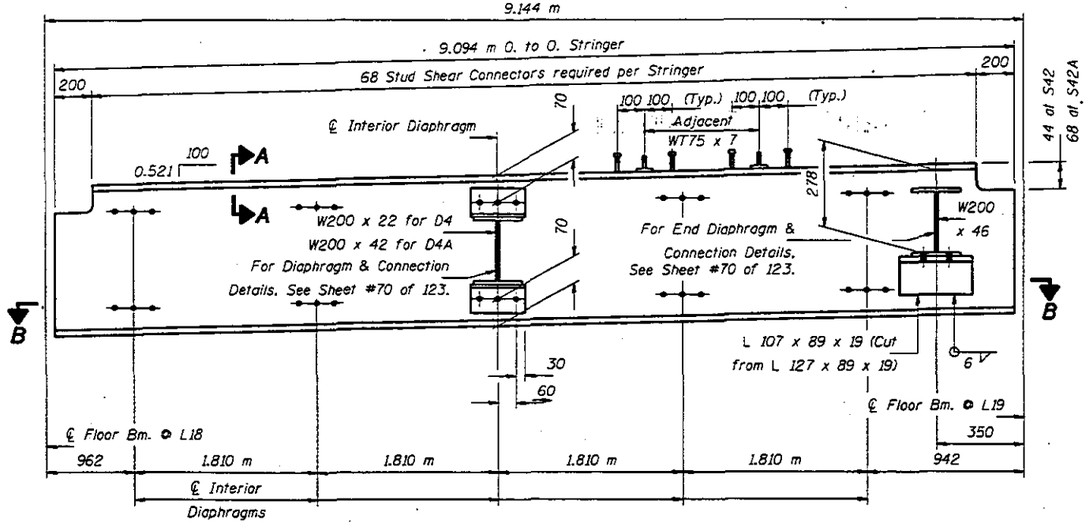

STRINGER S42 & S42A - SPAN #7

W460 x 60 (NTR)
(No. Required = 2 for S42 & 2 for S42A)

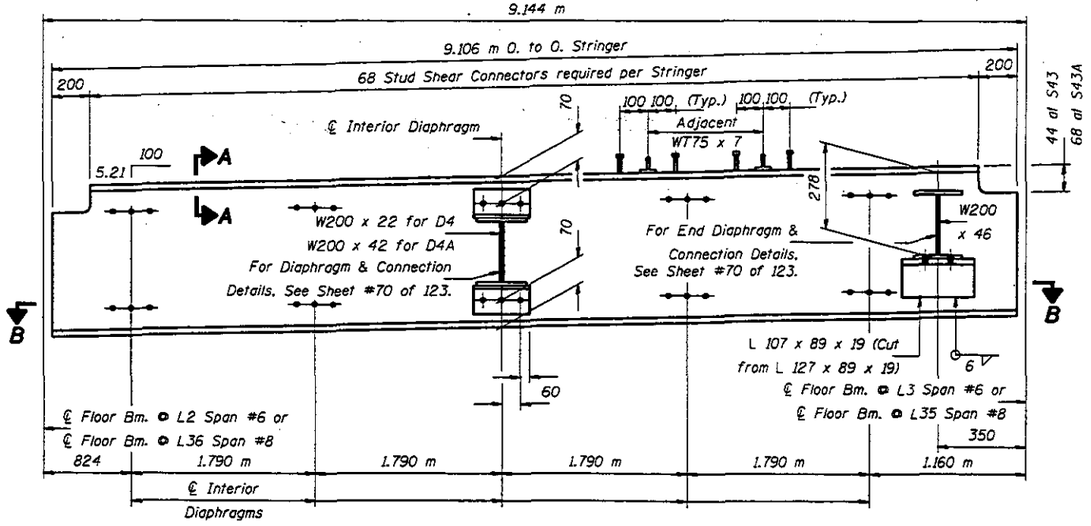

STRINGER S43 & S43A - SPAN #6 & #8

W460 x 60 (NTR)
(No. Required = 4 for S43 & 4 for S43A)

Notes: For Sections A-A & B-B see sheet #69 of 123.
To facilitate field erection, stringer lengths are shorter than those taken from existing Fabrication Plans.
"NTR" denotes members to which Notch Toughness Requirements are applicable.
Hardered washers shall be required over all 24 mm ϕ holes.
All holes in the ends of the Stringer Webs shall be field drilled for end connections. See Floor Beam sheets #45 thru #55 of 123 for details. All other holes are shop drilled.
For Stringer locations see sheets #37 thru #39 of 123.
Position Stringers S40 to maintain equal clearances from faces of floor beam webs at both ends.
Position Stringers S41, S42 & S43 by placing Stringer end (end which is to have field drilled holes on Stringer Web) to maintain 12 mm clearance from face of Floor Beam Web.
After grid deck is installed on the Stringer, install stud shear connectors as shown. Place adjacent Stud Shear Connectors alternately as shown on Section A-A, see sheet #69 of 123.
Stringers shall be AASHTO M270M Grade 345. △1

DESIGNED	LSH
CHECKED	JLC TTBB
DRAWN	John F. Schneller Jr.
CHECKED	LSH TTBB

June 26, 1997
EXAMINED Raj. D. Kapur ENGINEER OF BRIDGE DESIGN
PASSED Rafat E. Anbari ENGINEER OF BRIDGES AND STRUCTURES

STRINGER DETAILS
F.A.P. RT. 315 SEC. 140B-1-4
FULTON AND MASON COUNTIES
STA. 10+646.69

△1 Revised 7-16-97 STD

STATE OF ILLINOIS
DEPARTMENT OF TRANSPORTATION

ROUTE NO.	SECTION	COUNTY	TOTAL SHEETS	SHEET NO.
F.A.P. 315	140B-1-4	FULTON & MASON		
FED. ROAD DIST. NO. 7		ILLINOIS	FED. AID PROJECT	

SHEET NO. 68
123 SHEETS

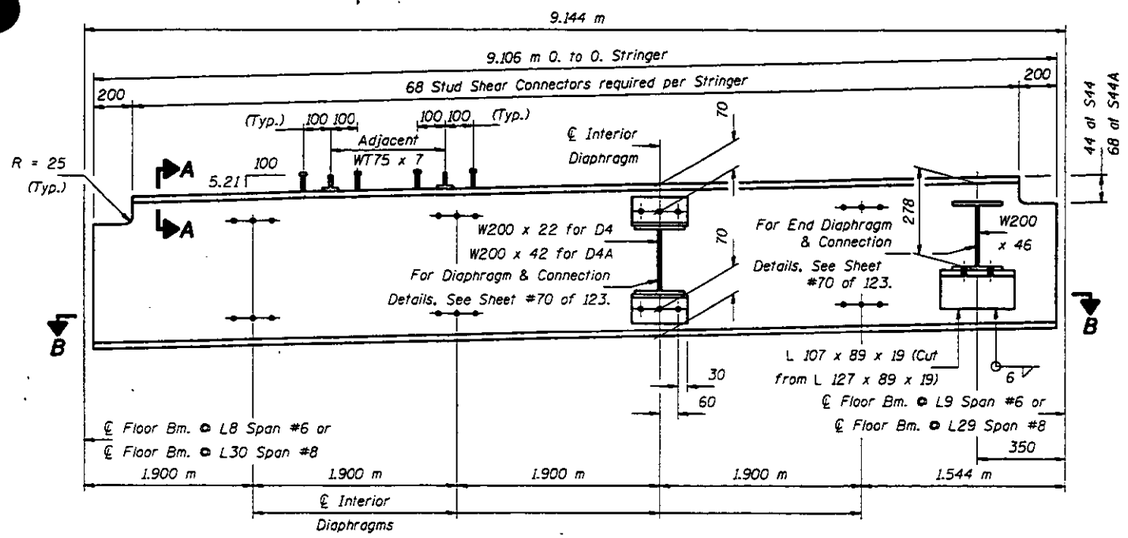

STRINGER S44 & S44A - SPAN #6 & #8

W460 x 60 (NTR)
(No. Required = 4 for S44 & 4 for S44A)

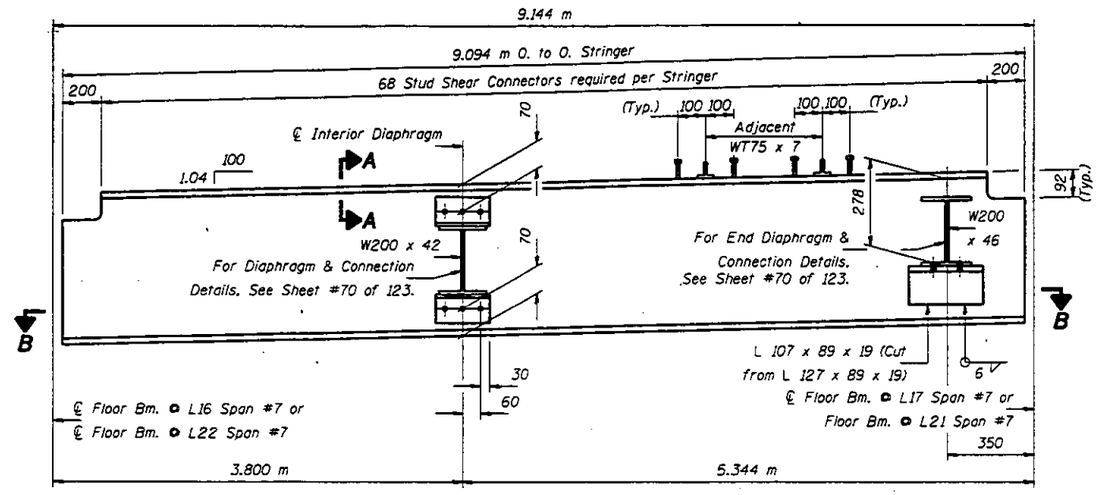

STRINGER S45 - SPAN #7

W460 x 60 (NTR)
(No. Required = 4)

Notes: For Sections A-A & B-B see sheet #69 of 123.
To facilitate field erection, stringer lengths are shorter than those taken from existing Fabrication Plans.
"NTR" denotes members to which Notch Toughness Requirements are applicable.
Hardered washers shall be required over all 24 mm ϕ holes.
All holes in the ends of the Stringer Webs shall be field drilled for end connections. See Floor Beam sheets #45 thru #55 of 123 for details. All other holes are shop drilled.
For Stringer locations see sheets #37 thru #39 of 123.
Position Stringers S44 & S45 by placing Stringer end (end which is to have field drilled holes on Stringer Web) to maintain 12 mm clearance from face of Floor Beam Web.
After grid deck is installed on the Stringer, install stud shear connectors as shown. Place adjacent Stud Shear Connectors alternately as shown on Section A-A, see sheet #69 of 123.
Stringers shall be AASHTO M270M Grade 345. △1

SIGNED	LSH
CHECKED	JLC TTBB
DRAWN	John F. Schneller Jr.
CHECKED	LSH TTBB

June 26, 1997
EXAMINED [signature] ENGINEER OF BRIDGE DESIGN
PASSED [signature] ENGINEER OF BRIDGES AND STRUCTURES

STRINGER DETAILS
F.A.P. RT. 315 SEC. 140B-I-4
FULTON AND MASON COUNTIES
STA. 10+646.69

△1 Revised 7-16-97 STD

\projects\jfs00004\0630002e.dgn Jul. 21, 1997 12:48:10

STATE OF ILLINOIS
DEPARTMENT OF TRANSPORTATION

ROUTE NO.	SECTION	COUNTY	TOTAL SHEETS	SHEET NO.
F.A.P. 315	140B-I-4	FULTON & MASON		89
FED. ROAD DIST. NO. 7	ILLINOIS	FED. AID PROJECT-		

SHEET NO. 69
123 SHEETS

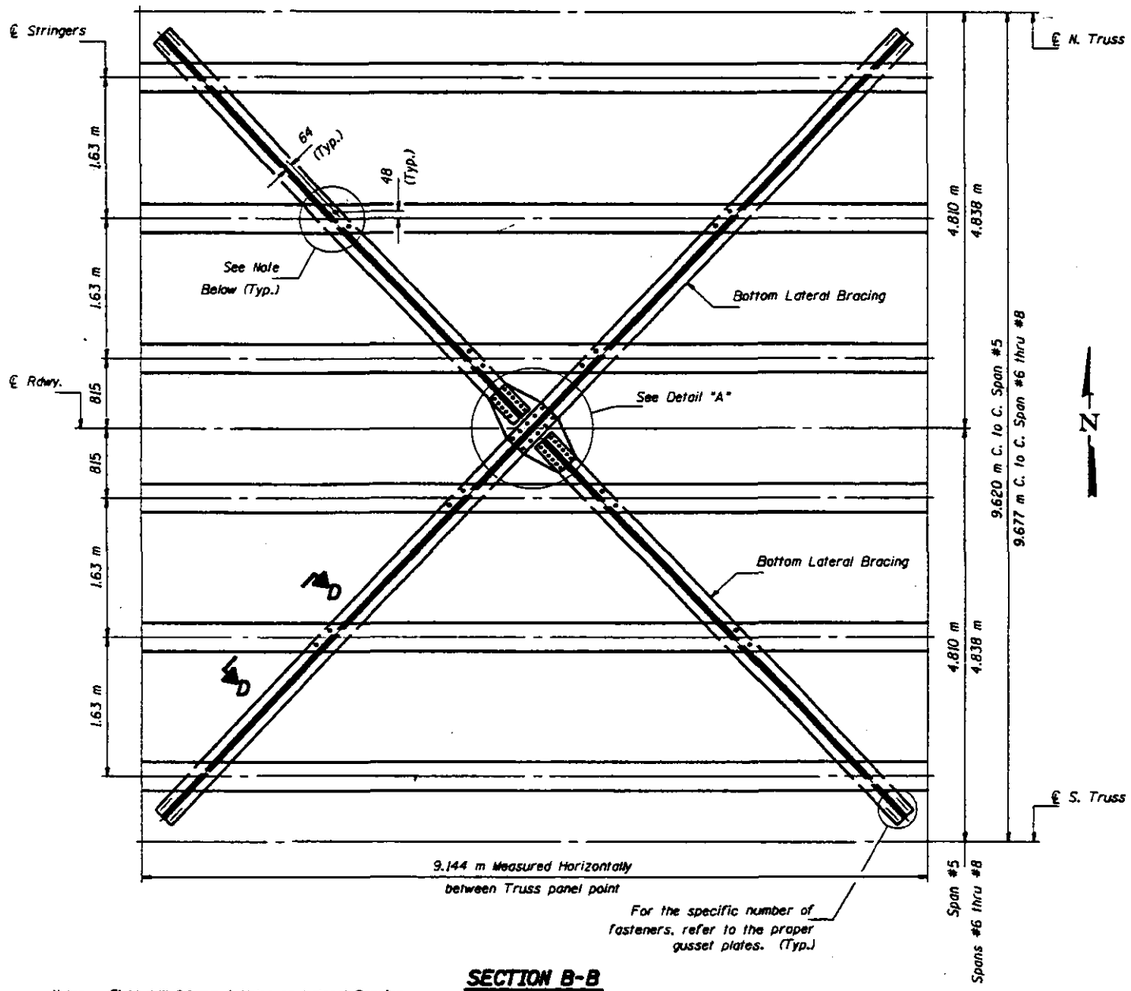

SECTION B-B
WT100 x 43

Notes Field drill 24 mm ϕ Holes on Lateral Bracing. 24 mm ϕ Holes on Bottom of Stringers may be field drilled.

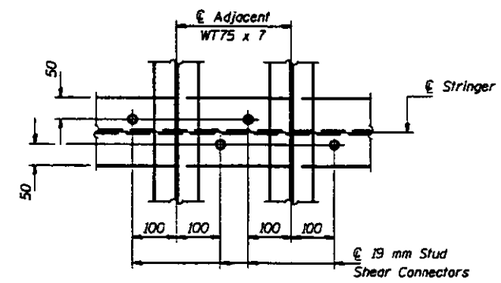

TOP VIEW OF SRINGER

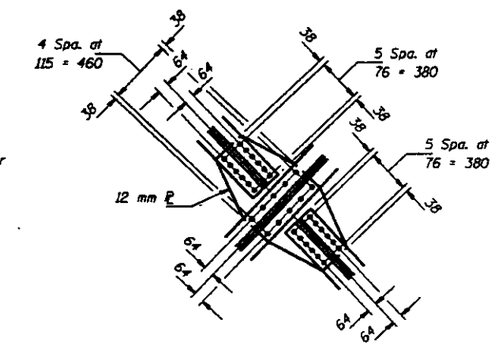

DETAIL "A"

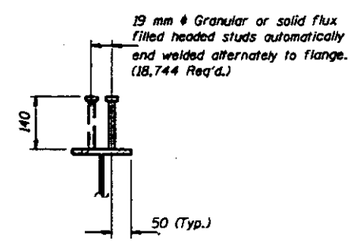

SECTION A-A

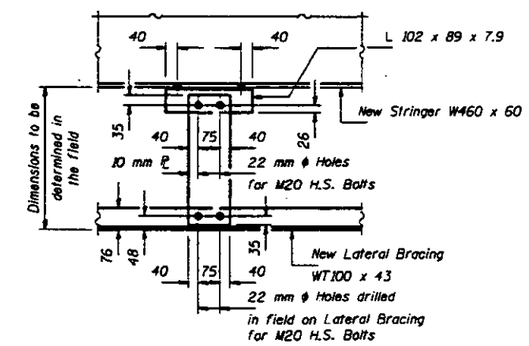

VIEW D-D

Notes All existing Bottom Lateral Bracing shall be replaced with AASHTO M270M Grade 345 Steel.
All connections to gusset plates shall be field drilled using existing gusset plates as a template.
The Contractor shall take care not to damage the existing bottom gusset plates when replacing bottom lateral bracing.
Bottom Lateral Bracing must be supported during Stringer Replacement. Cost is included with "Furnishing & Erecting Structural Steel".

DESIGNED LSH	June 26, 1997
CHECKED TTB	CHANGED Raj. D. Kapur — ENGINEER OF BRIDGE DESIGN
DRAWN John F. Schneller Jr.	PASSED Robert E. Cronin — ENGINEER OF BRIDGE AND STRUCTURE
CHECKED LSH TTB	

STRINGER DETAILS & BOTTOM LATERIAL BRACING
F.A.P. RT. 315 SEC. 140B-I-4
FULTON AND MASON COUNTIES
STA. 10+646.69

STATE OF ILLINOIS
DEPARTMENT OF TRANSPORTATION

F.A.P. 315	140B-1-4	FULTON & MASON		90

SHEET NO. 70
123 SHEETS

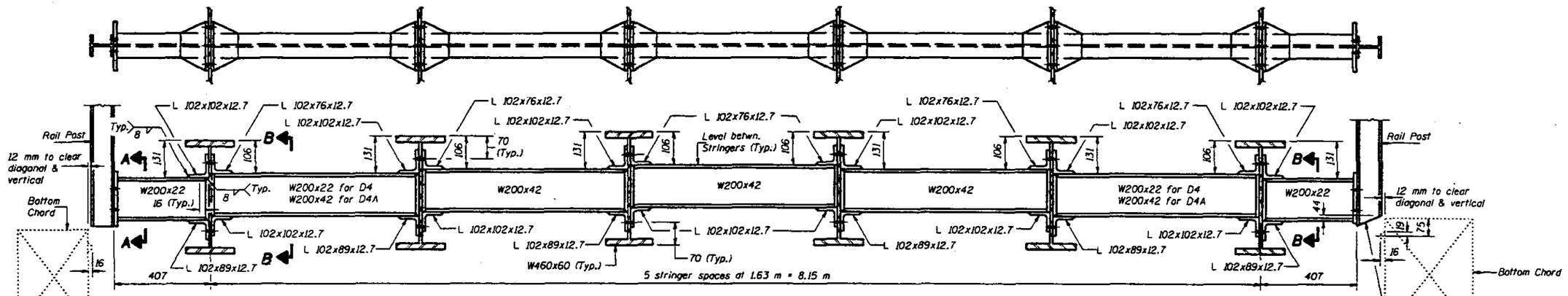

DIAPHRAGM D_5
SPAN 5
(76 Required)

DIAPHRAGMS D_4 & D_{4A}
SPANS 5 THRU 8
(586 Required)

DIAPHRAGM D_5
SPANS 6, 7 & 8
(372 Required)

Cut in field as necessary. (From L_{19} to L_{20} - Span 7) Cost included with "Steel Bridge Rail, Type SM (Modified)."

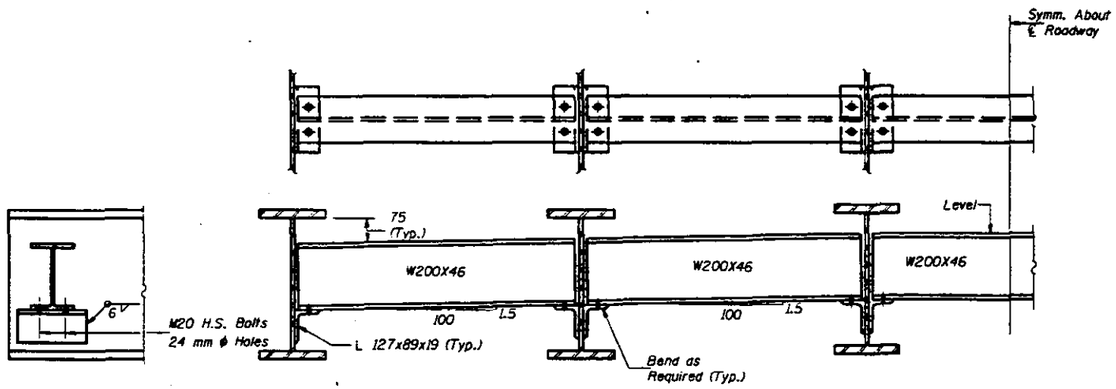

DIAPHRAGM D_6
(80 Required)

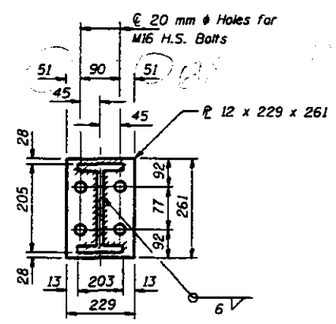

SECTION A-A

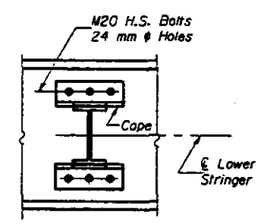

VIEW B-B

DESIGNED	LSH
CHECKED	JLC TTB
DRAWN	R. Doty
CHECKED	LSH TTB

June 26, 1997

DRAWING ENGINEER OF BRIDGE DESIGN

ENGINEER OF BRIDGES AND STRUCTURES

Note: Two hardened washers shall be required over all oversized holes.

TRUSS SPANS
DIAPHRAGM DETAILS
F.A.P. RT. 315 SECTION 140B-I-4
FULTON AND MASON COUNTIES
STATION 10+646.69

STATE OF ILLINOIS
DEPARTMENT OF TRANSPORTATION

ROUTE NO.	SECTION	COUNTY	TOTAL SHEETS	SHEET NO.
F.A.P. 315	140B-I-4	FULTON & MASON		
FED. ROAD DIST. NO. 7	ILLINOIS	FED. AID PROJECT-		

SHEET NO. 71
123 SHEETS

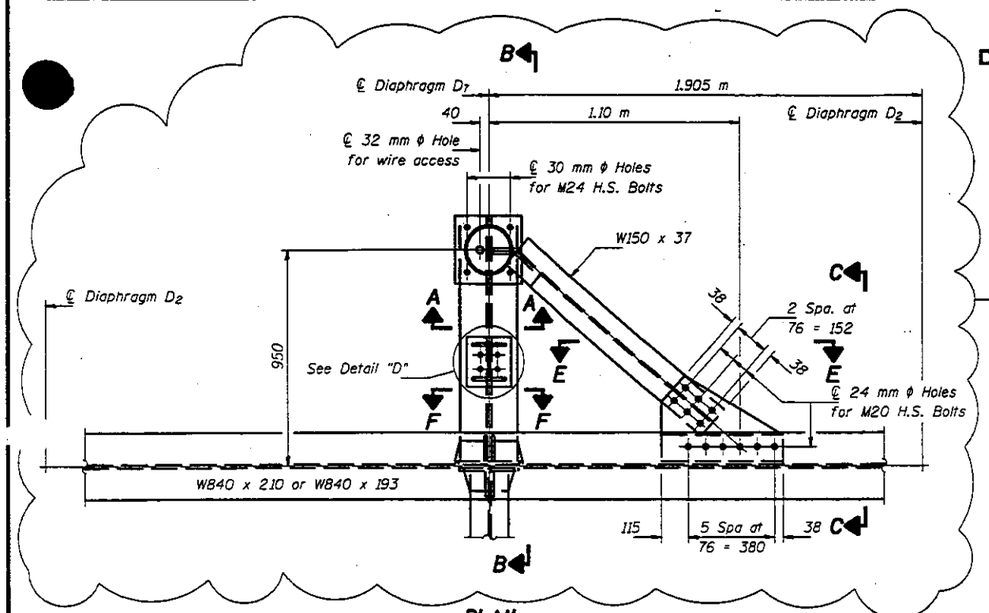

PLAN

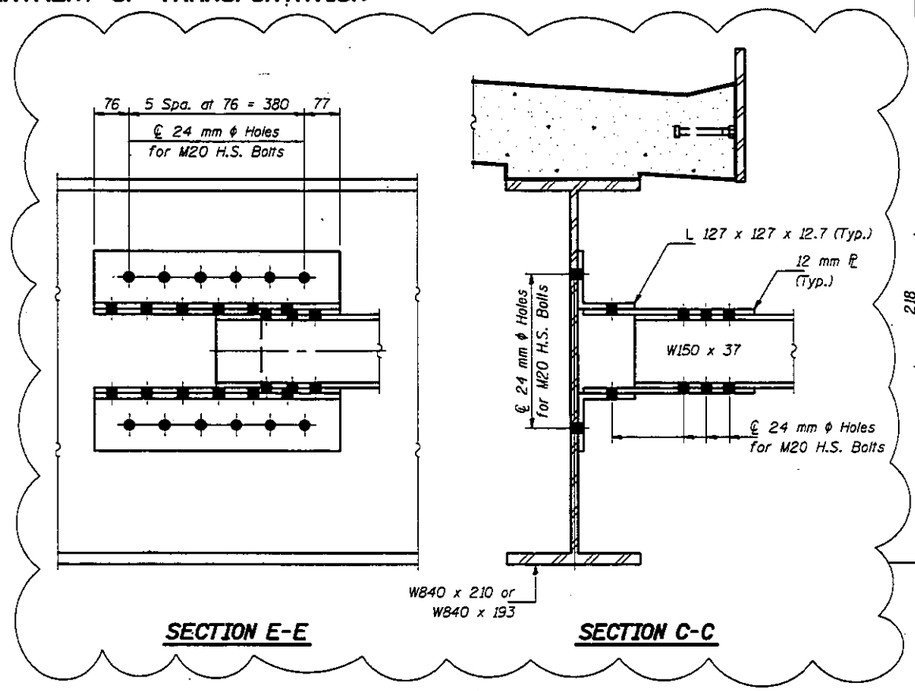

SECTION E-E

SECTION C-C

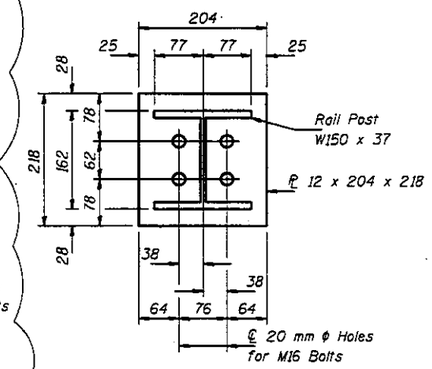

DETAIL "D"

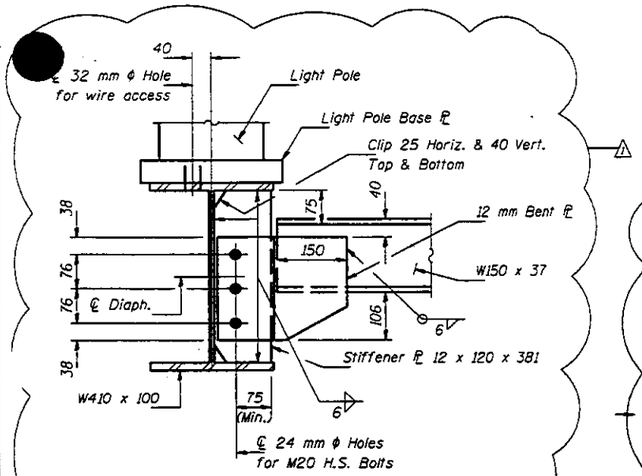

SECTION A-A

Notes: Two hardened washers shall be required over all oversized holes.

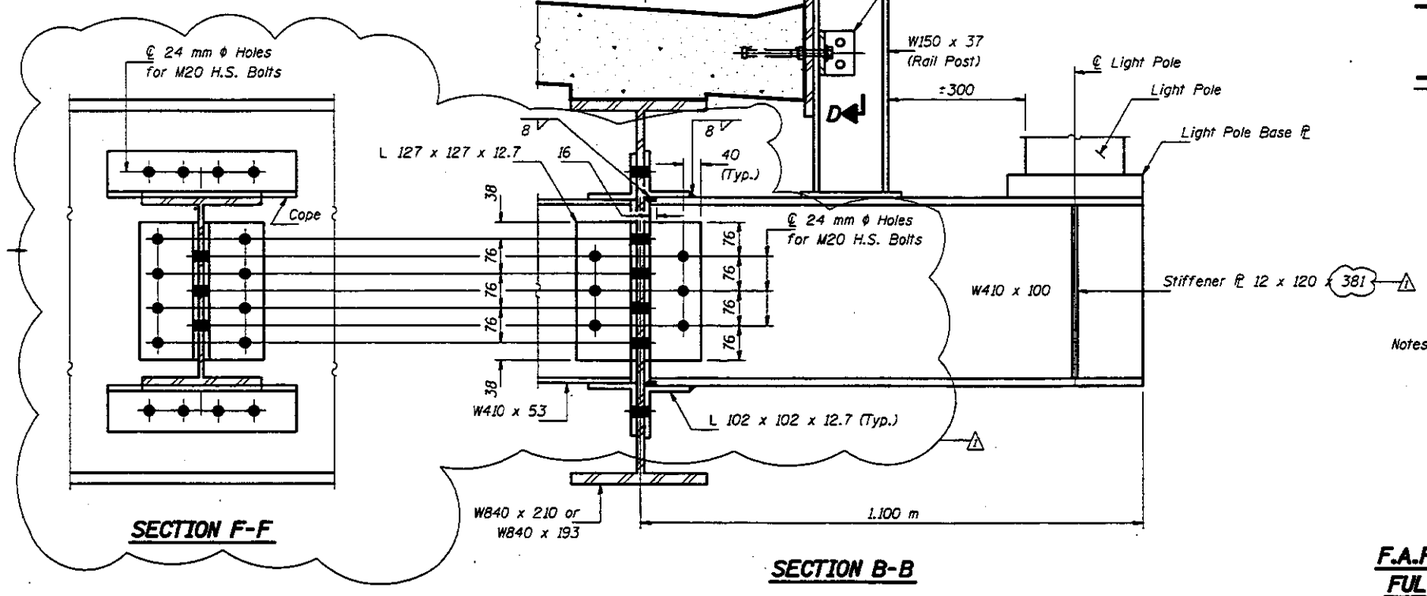

SECTION F-F

SECTION B-B

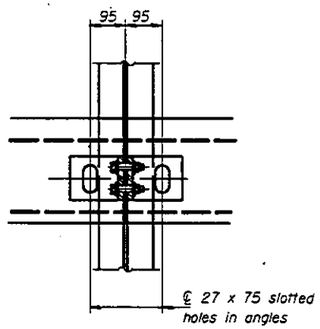

SECTION D-D

Notes: For remainder of Bridge Rail Details see sheet #76 of 123.

DESIGNED	JLC
CHECKED	TTBB
DRAWN	John F. Schneller Jr.
CHECKED	JLC TTBB

June 26, 1997

EXAMINED Engineer of Bridge Design

PASSED Engineer of Bridges and Structures

LIGHT POST SUPPORT
DIAPHRAGM D7
F.A.P. RT. 315 SEC. 140B-I-4
FULTON AND MASON COUNTIES
STA. 10+646.69

⚠ Revised 7-16-97 STD

projects\jfs00004\0630002e.dgn Jul. 21, 1997 14:50:08.

F.A.P. 315	140B-I-4	FULTON & MASON		92

SHEET NO. 74
123 SHEETS

STATE OF ILLINOIS
DEPARTMENT OF TRANSPORTATION

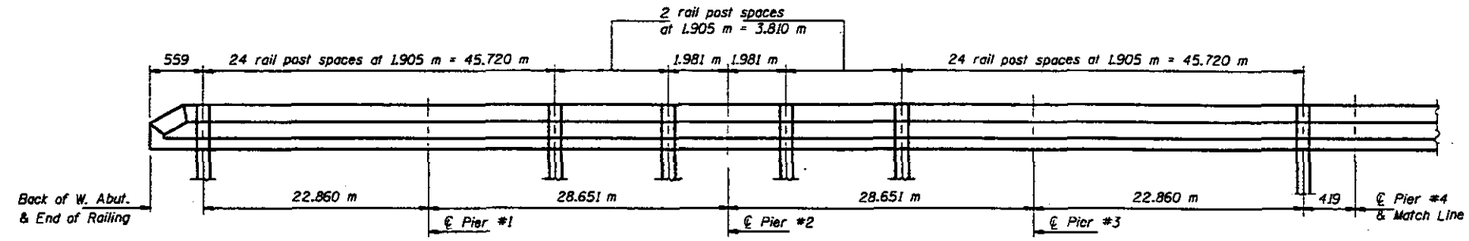

ELEVATION - SPANS 1 THRU 4
(Looking North)

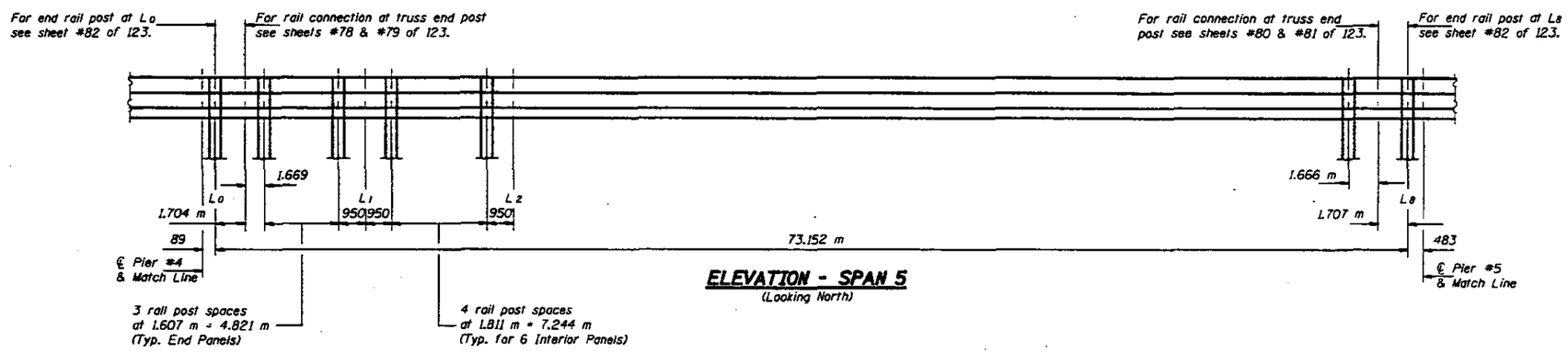

ELEVATION - SPAN 5
(Looking North)

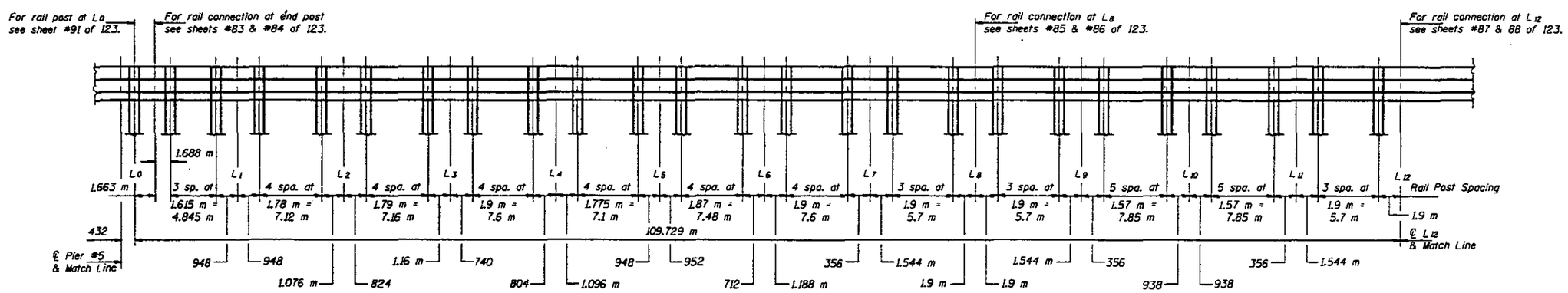

ELEVATION - SPAN 6
(Looking North)

DESIGNED	JLC LSH
CHECKED	JLC TTBB
DRAWN	R. Doty
CHECKED	JLC TTBB LSH

June 26, 1997

ENGINEER OF BRIDGE DESIGN

ENGINEER OF BRIDGES AND STRUCTURES

Note: For rail post details see sheets #76 & #77 of 123.

TYPE SM (MODIFIED)
RAIL POST SPACING
F.A.P. RT. 315 SECTION 140B-I-4
FULTON AND MASON COUNTIES
STATION 10+646.69

STATE OF ILLINOIS
DEPARTMENT OF TRANSPORTATION

F.A.P. 315	140B-I-4	FULTON & MASON		93	SHEET NO. 75 / 123 SHEETS

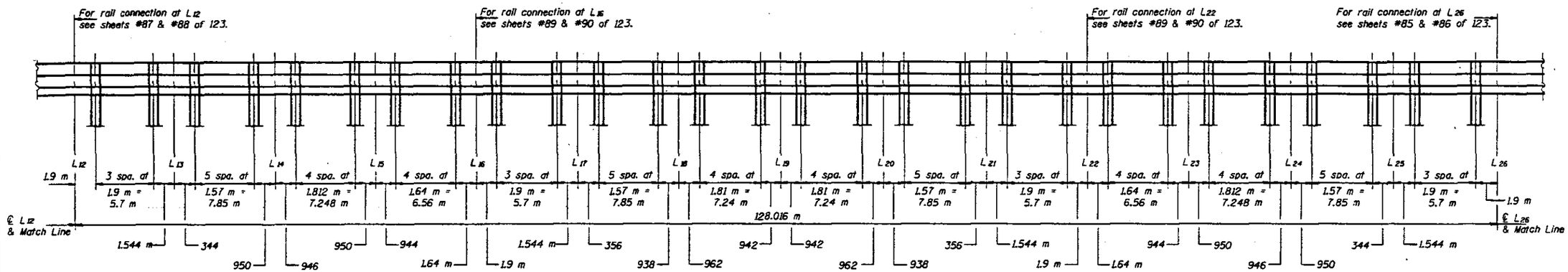

ELEVATION - SPAN 7
(Looking North)

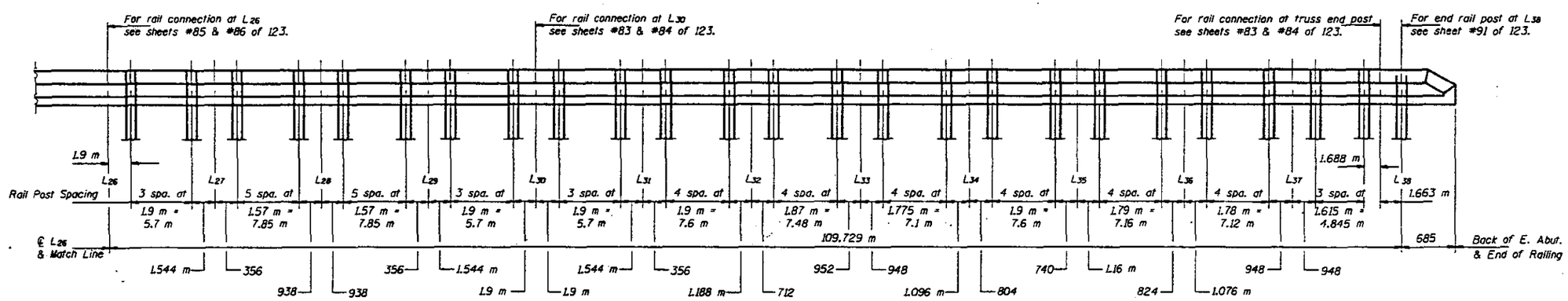

ELEVATION - SPAN 8
(Looking North)

DESIGNED	LSH
CHECKED	TTBG
DRAWN	R. Doty
CHECKED	LSH TTBG

June 26, 1997

EXAMINED Greg. O. Hagen ENGINEER OF TRUSS DESIGN

PASSED Ralph E. Anderson ENGINEER OF BRIDGES AND STRUCTURES

Note: For rail post details see sheets #76 & #77 of 123.

TYPE SM (MODIFIED)
RAIL POST SPACING
F.A.P. RT. 315 SECTION 140B-I-4
FULTON AND MASON COUNTIES
STATION 10+646.69

STATE OF ILLINOIS
DEPARTMENT OF TRANSPORTATION

F.A.P. RT. NO.	SECTION	COUNTY	TOTAL SHEETS	SHEET NO.
F.A.P. 315	140B-1-4	FULTON & MASON		
FED. ROAD DIST. NO. 7	ILLINOIS	FED. AID PROJECT-		

SHEET NO. 76
123 SHEETS

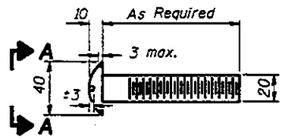

DETAIL OF 20 mm ϕ ROUND HEAD BOLT

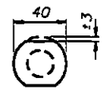

Without Slot or Recess

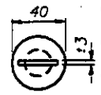

With Slot

VIEW A-A

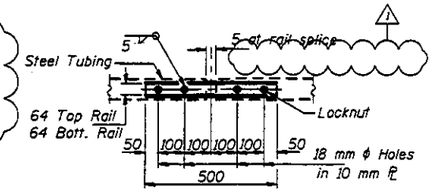

PLAN-BOTT. SPLICE ℙ TYPICAL

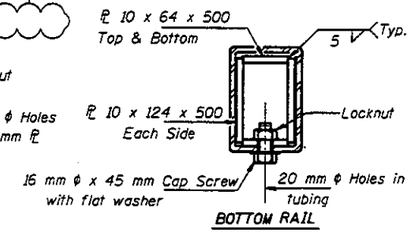

BOTTOM RAIL

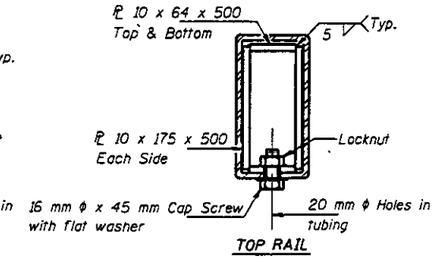

TOP RAIL

SECTIONS AT RAIL SPLICE

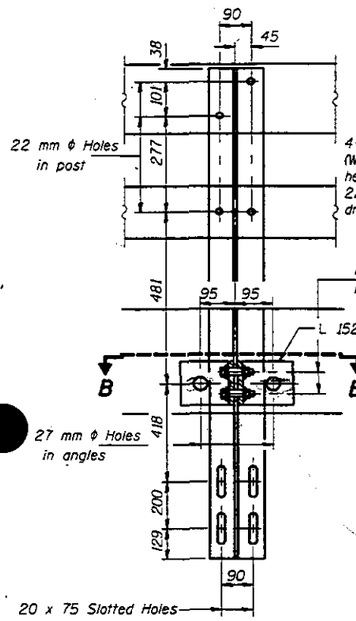

SECTION A-A

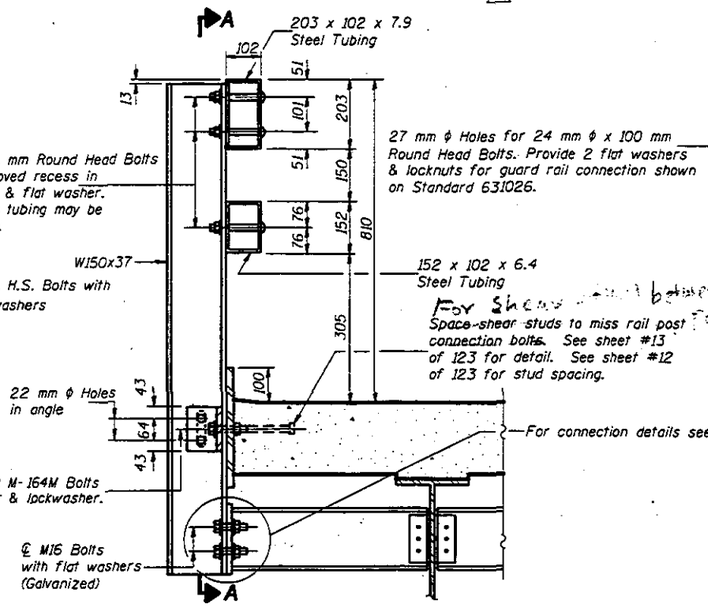

SECTION AT RAIL POST CONNECTION SPANS 1 THRU 4

(Connection of rail post to Diaphragm and slab differ at Diaphragm D_7 only)

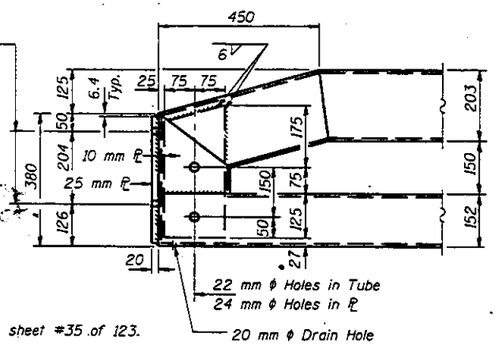

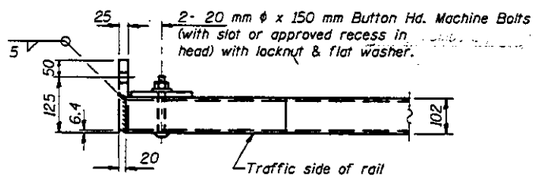

END OF RAIL DETAILS

NOTES

Hollow structural steel tubing shall conform to the requirements of ASTM desingnation A-500 Grade B Structural Steel Tubing and shall meet the longitudinal CVN requirements of 20 N·m at -18 °C.

All other steel shapes and plates shall conform to the requirements of AASHTO M-270M Grade 250 except posts and angles shall conform to AASHTO M-270M, Grade 345.

Bolts, cap screws, and nuts shall conform to the requirements of ASTM designation A-307 except for high strength bolts, nuts and washers noted which shall conform to AASHTO M-164M.

All bolts, nuts, cap screws, washers and lock washers shall be galvanized in accordance with AASHTO M-232.

All posts, railing, rail splices, anchor devices and angles shall be galvanized after shop fabrication in accordance with AASHTO M-111 and ASTM A-385. Galvanized rail shall not be painted.

Railing shall be in accordance with Section 509 of the Standard Specifications, except as noted, and will be paid for at the contract unit price per meter for STEEL BRIDGE RAIL, TYPE SM (MODIFIED).

All field drilled holes shall be coated with an approved zinc rich paint before erection.

Bolts located at expansion joint shall be provided with locknuts and shall be tightened only to a point that will allow railing movement.

The M20 high strength bolts used to connect the 152 x 102 x 19 angles to the post shall be tightened in accordance with Article 505.04(f)(3) of the Standard Specifications. The M24 high strength bolts connecting the angles to the concrete shall be tightened to a snug fit and given an additional ⅛ turn. The 16 mm ϕ bolts in bottom of posts shall be tightened to a snug fit only.

For rail treatment at the expansion joint at Pier #4, see sheet #77A of 123.

1

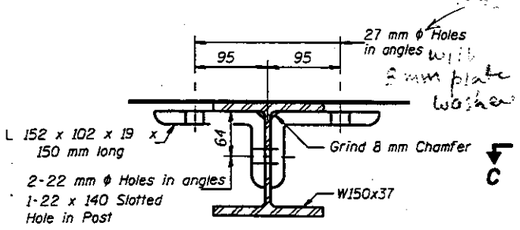

SECTION B-B

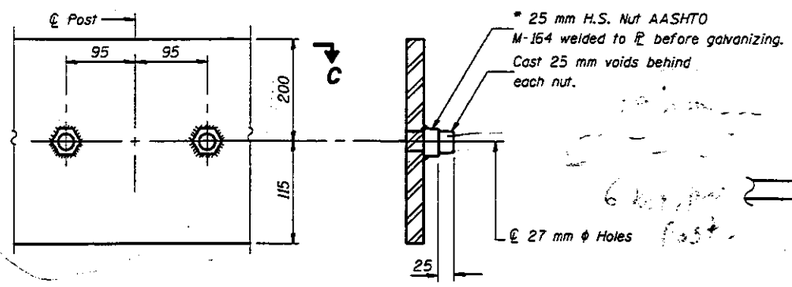

TOP ANCHOR DEVICE

* Threaded areas shall be plugged or blocked off during pouring of slab.

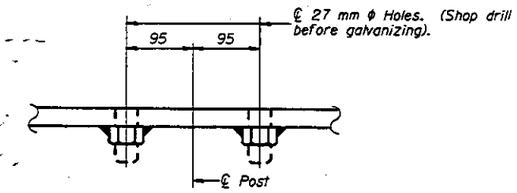

VIEW C-C

BILL OF MATERIAL

Item		Quantity
Steel Bridge Rail, Type SM (Modified)	m	208.0

DESIGNED	JLC
CHECKED	TTBB
DRAWN	R. Daty
CHECKED	JLC TTBB

June 26, 1997
EXAMINED Greg J. Hagen — ENGINEER OF BRIDGE DESIGN
APPROVED Ralph E. Anderson — ENGINEER OF BRIDGES AND STRUCTURES

R-34 (M) 7-1-94 (1.9 m Maximum Post Spacing)

TYPE SM (MODIFIED)
SPANS 1 THRU 4
STEEL BRIDGE RAIL SIDE MOUNTED
F.A.P. RT. 315 SECTION 140B-1-4
FULTON AND MASON COUNTIES
STATION 10+646.69

1 Revised 7-16-97 STD

projects\rad00012\0630002a.dgn Jul. 21, 1997 15:27:57

STATE OF ILLINOIS
DEPARTMENT OF TRANSPORTATION

F.A.P. NO.	SECTION	COUNTY	TOTAL SHEETS	SHEET NO.
F.A.P. 315	140B-I-4	FULTON & MASON		

SHEET NO. 77
123 SHEETS

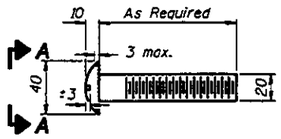

DETAIL OF 20 mm ϕ ROUND HEAD BOLT

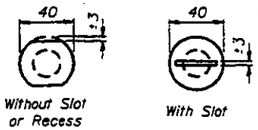

VIEW A-A

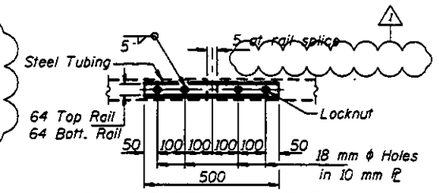

PLAN-BOTT. SPLICE ℙ TYPICAL

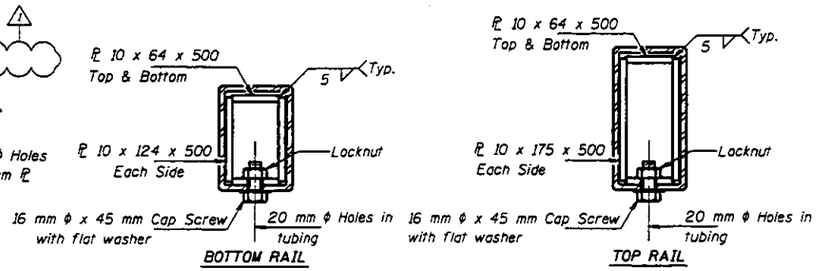

SECTIONS AT RAIL SPLICE

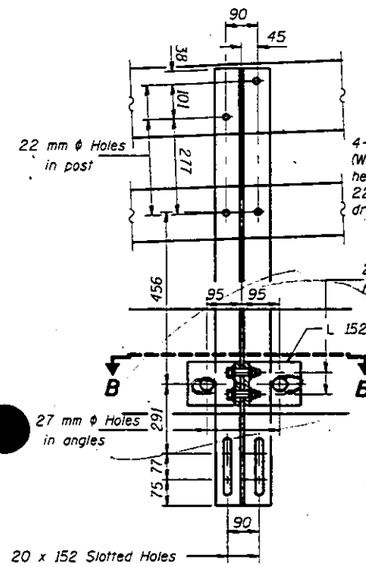

SECTION A-A

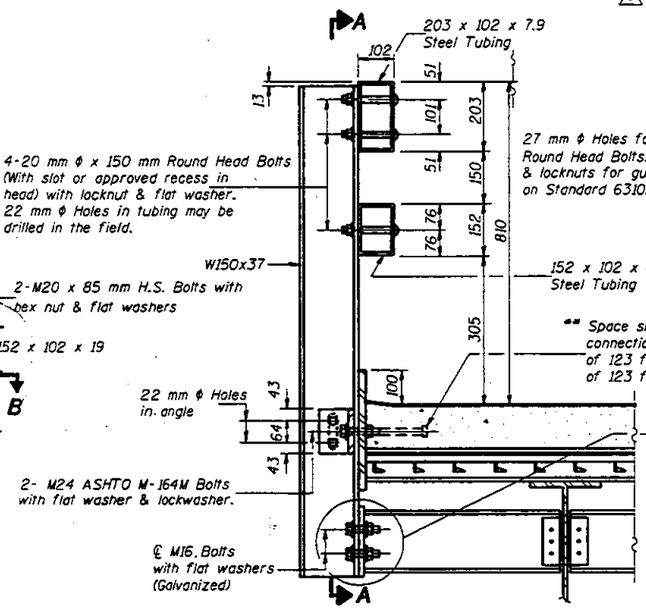

SECTION AT RAIL POST CONNECTION
SPANS 5 THRU 8

** The shear studs that interfere with rail posts shall be relocated next to the rail post.

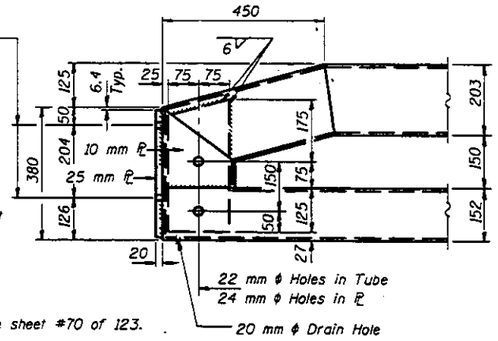

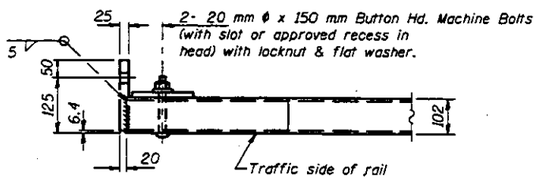

END OF RAIL DETAILS

NOTES

Hollow structural steel tubing shall conform to the requirements of ASTM desingnation A-500 Grade B Structural Steel Tubing and shall meet the longitudinal CVN requirements of 20 N·m at -18 °C.

All other steel shapes and plates shall conform to the requirements of AASHTO M-270M Grade 250 except posts and angles shall conform to AASHTO M-270M, Grade 345.

Bolts, cap screws, and nuts shall conform to the requirements of ASTM designation A-307 except for high strength bolts, nuts and washers noted which shall conform to AASHTO M-164M.

All bolts, nuts, cap screws, washers and lock washers shall be galvanized in accordance with AASHTO M-232.

All posts, railing, rail splices, anchor devices and angles shall be galvanized after shop fabrication in accordance with AASHTO M-111 and ASTM A-385. Galvanized rail shall not be painted.

Railing shall be in accordance with Section 509 of the Standard Specifications, except as noted, and will be paid for at the contract unit price per meter for STEEL BRIDGE RAIL, TYPE SM (MODIFIED).

All field drilled holes shall be coated with an approved zinc rich paint before erection.

Bolts located at expansion joint shall be provided with locknuts and shall be tightened only to a point that will allow railing movement.

The M20 high strength bolts used to connect the 152 x 102 x 19 angles to the post shall be tightened in accordance with Article 505.04(f)(3) of the Standard Specifications. The M24 high strength bolts connecting the angles to the concrete shall be tightened to a snug fit and given an additional ⅓ turn. The 16 mm ϕ bolts in bottom of posts shall be tightened to a snug fit only.

For rail treatment at the expansion joint at Pier #5, see sheet #77A of 123.

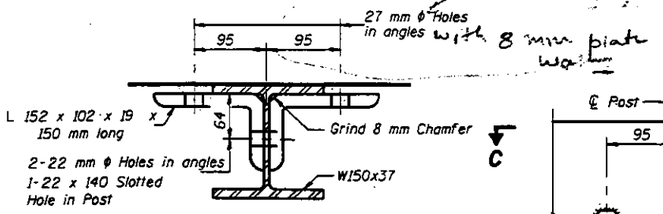

SECTION B-B

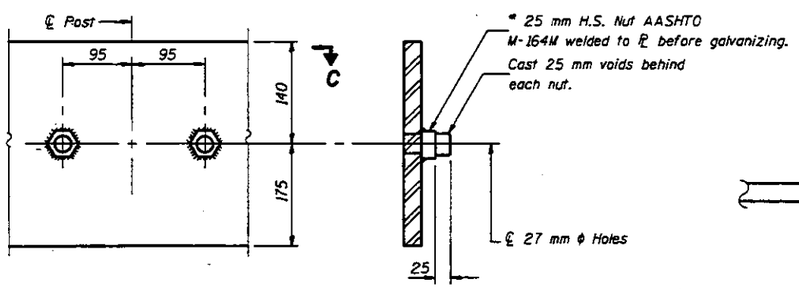

TOP ANCHOR DEVICE

* Threaded areas shall be plugged or blocked off during pouring of slab.

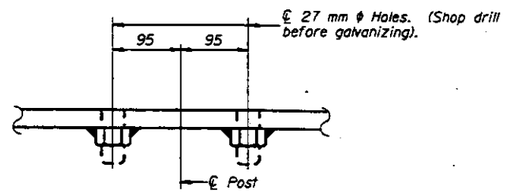

VIEW C-C

BILL OF MATERIAL

Item		Quantity
Steel Bridge Rail, Type SM (Modified)	m	844.6

DESIGNED	L S H
CHECKED	T T B B
DRAWN	R. Doty
CHECKED	L S H T T B B

June 26, 1997

EXAMINED Greg L. Hoppe ENGINEER OF BRIDGE DESIGN

PASSED Ralph E. Anderson ENGINEER OF BRIDGES AND STRUCTURES

R-34 (M) 7-1-94 (1.9 m Maximum Post Spacing)

TYPE SM (MODIFIED)
SPANS 5 THRU 8
STEEL BRIDGE RAIL SIDE MOUNTED
F.A.P. RT. 315 SECTION 140B-I-4
FULTON AND MASON COUNTIES
STATION 10+646.69

1 Revised 7-16-97 STD

\projects\rad00012\0630002c.dgn Jul. 21, 1997 15:39:26

STATE OF ILLINOIS
DEPARTMENT OF TRANSPORTATION

RT. NO.	SECTION	COUNTY	TOTAL SHEETS	SHEET NO.
F.A.P. 315	140B-I-4	FULTON & MASON		
FED. ROAD DIST. NO. 7	ILLINOIS	FED. AID PROJECT-		

SHEET NO. 77A
123 SHEETS
1

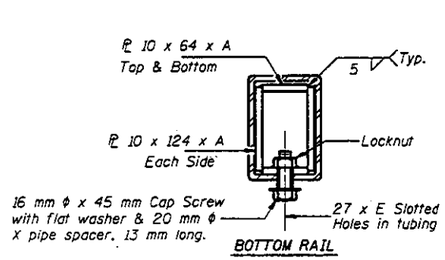

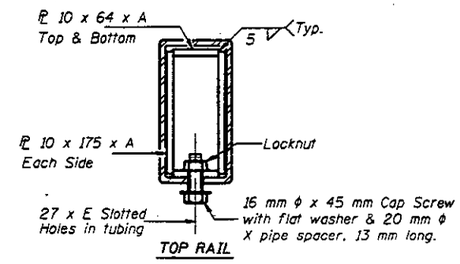

SECTION - RAIL SPLICE CONNECTION AT EXPANSION JT.

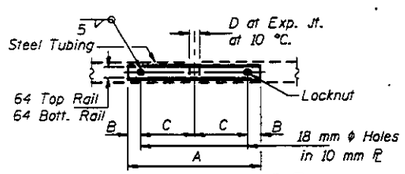

PLAN-BOTT. SPLICE PL TYPICAL

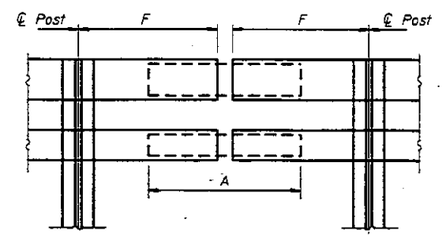

ELEVATION - RAIL SPLICE CONNECTION AT EXPANSION JT.

1
This Entire Sheet
Has Been Added.

TABLE OF "A" THRU "F" DIMENSIONS

	A	B	C	D	E	F
65 mm Neoprene Jt. at Pier #4	300	50	100	50	50	229
Finger Joint at Pier #5	588	64	230	179	180	368

DESIGNED	JLC
CHECKED	TTBB
DRAWN	R. Doty
CHECKED	JLC TTBB

June 26, 1997
EXAMINED — ENGINEER OF BRIDGE DESIGN
PASSED — ENGINEER OF BRIDGES AND STRUCTURES

TYPE SM (MODIFIED)
EXPANSION JOINT DETAILS
STEEL BRIDGE RAIL SIDE MOUNTED
F.A.P. RT. 315 SECTION 140B-I-4
FULTON AND MASON COUNTIES
STATION 10+646.69

1 Revised 7-16-97 STD

projects\rad00012\0630002c.dgn Jul. 21, 1997 15:39:34

STATE OF ILLINOIS
DEPARTMENT OF TRANSPORTATION

F.A.P. NO.	SECTION	COUNTY	TOTAL SHEETS	SHEET NO.
F.A.P. 315	140B-1-4	FULTON & MASON		96

SHEET NO. 78
123 SHEETS

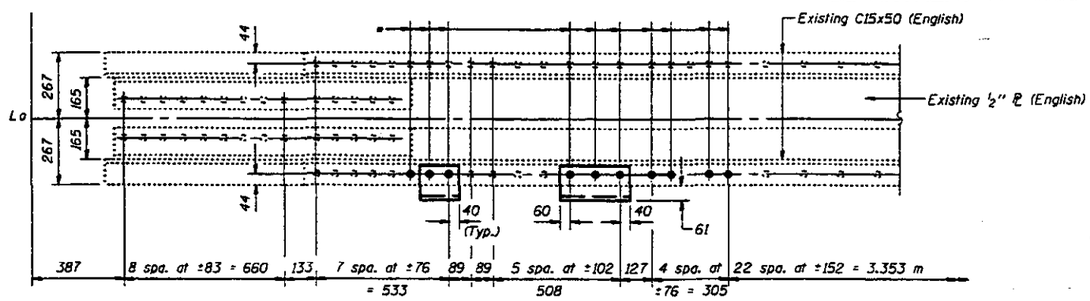

VIEW C-C

* ℄ Existing rivets to be removed and replaced with M22 H.S. Bolts. Cost is included with "Steel Bridge Rail, Type SM (Modified)."

** Cost included with "Steel Bridge Rail, Type SM (Modified)."

*** Shop drill 24 mm ϕ Holes in L 152 x 152 x 12.7 which will be used to drill 24 mm ϕ Hole for M22 H.S. Bolts in truss end post. Cost included with "Steel Bridge Rail, Type SM (Modified)."

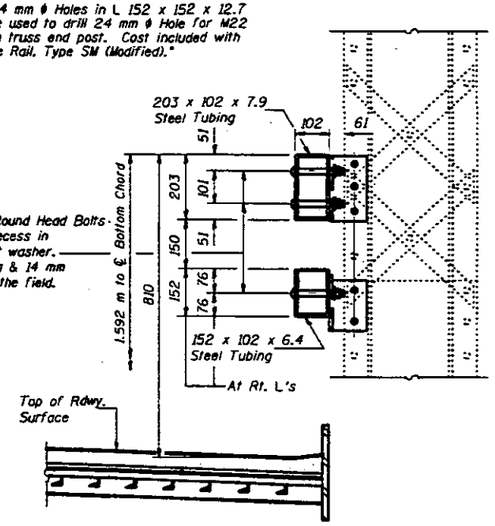

VIEW A-A

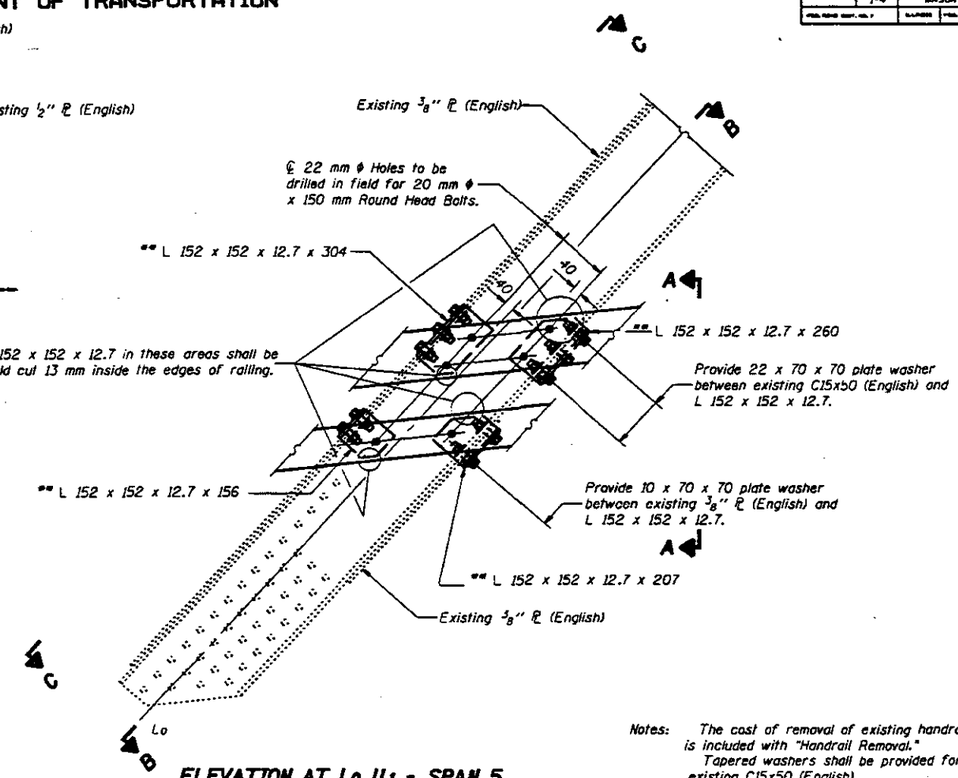

ELEVATION AT Lo U1 - SPAN 5
(North Truss - Looking North)

Notes: The cost of removal of existing handrail support elements is included with "Handrail Removal."
Tapered washers shall be provided for all attachments inside existing C15x50 (English).
Cost of field drilling holes is included with "Steel Bridge Rail, Type SM (Modified)."

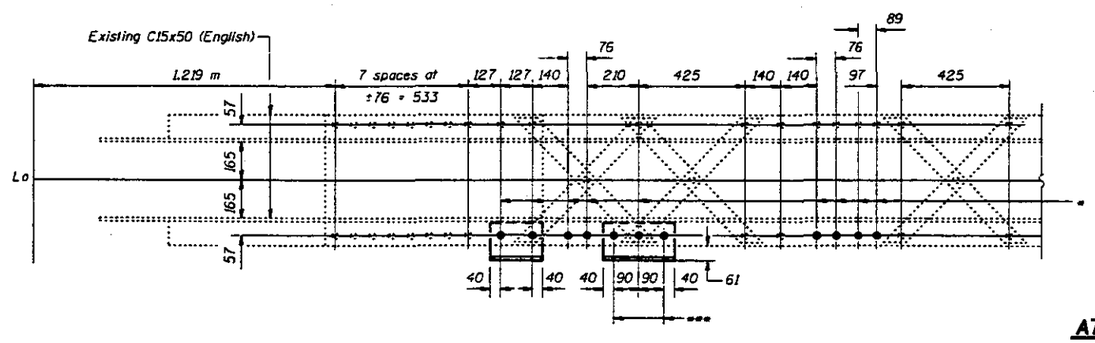

VIEW B-B

DESIGNED	LSH
CHECKED	TTBB
DRAWN	R. Doty
CHECKED	LSH TTBB

June 26, 1997
EXAMINED Raj. D. Kapur — ENGINEER OF FLEXIBLE DESIGN
PASSED Robert E. Cronkhright — ENGINEER OF BRIDGES AND STRUCTURES

RAILING DETAILS
AT Lo - U1 -NORTH TRUSS - SPAN 5
F.A.P. RT. 315 SECTION 140B-1-4
FULTON AND MASON COUNTIES
STATION 10+646.69

STATE OF ILLINOIS
DEPARTMENT OF TRANSPORTATION

F.A.P. NO.	SECTION	COUNTY	TOTAL SHEETS	SHEET NO.
F.A.P. 315	140B-I-4	FULTON & MASON		97

SHEET NO. 79
123 SHEETS

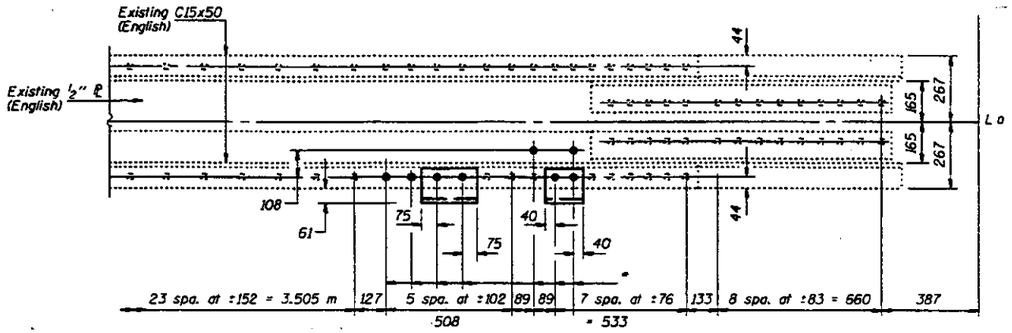

VIEW C-C

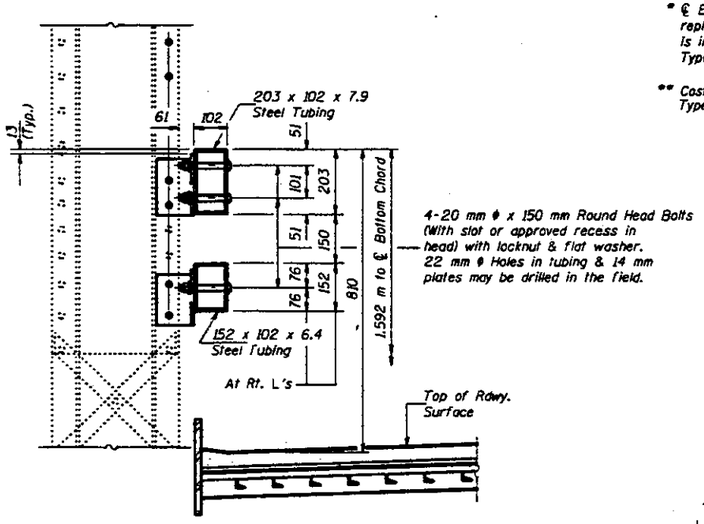

VIEW A-A

* ℄ Existing rivets to be removed and replaced with M22 H.S. Bolts. Cost is included with "Steel Bridge Rail, Type SM (Modified)."

** Cost included with "Steel Bridge Rail, Type SM (Modified)."

Notes: The cost of removal of existing handrail support elements is included with "Handrail Removal."
Tapered washers shall be provided for all attachments inside existing C15x50 (English).

Type SM (Modified)."

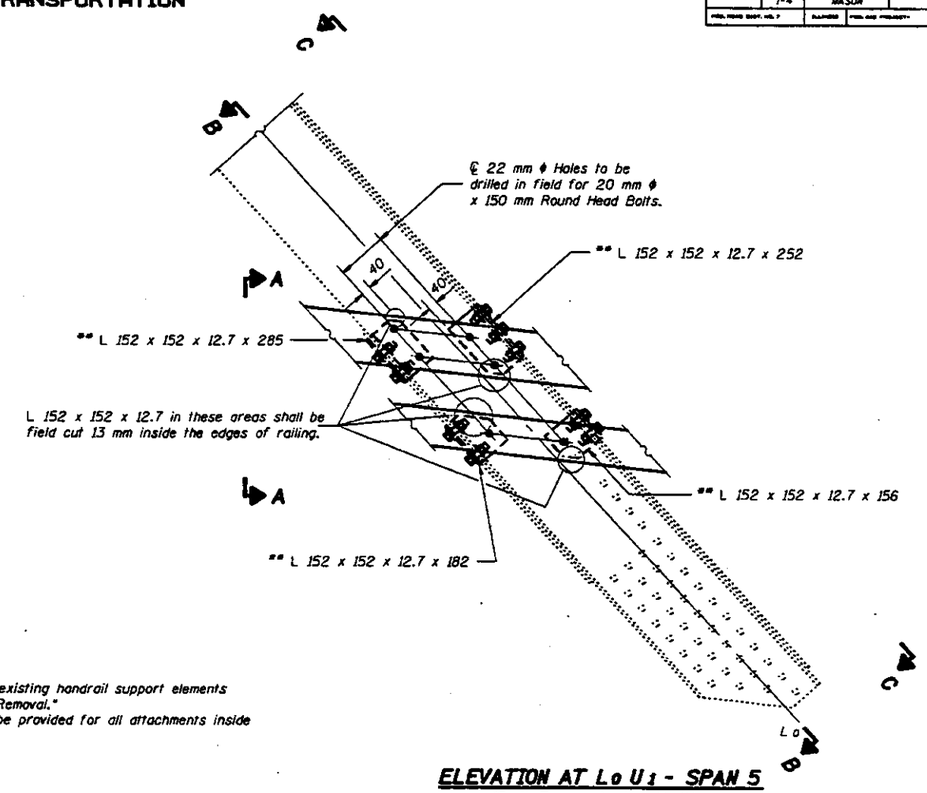

ELEVATION AT Lo U1 - SPAN 5
(South Truss - Looking South)

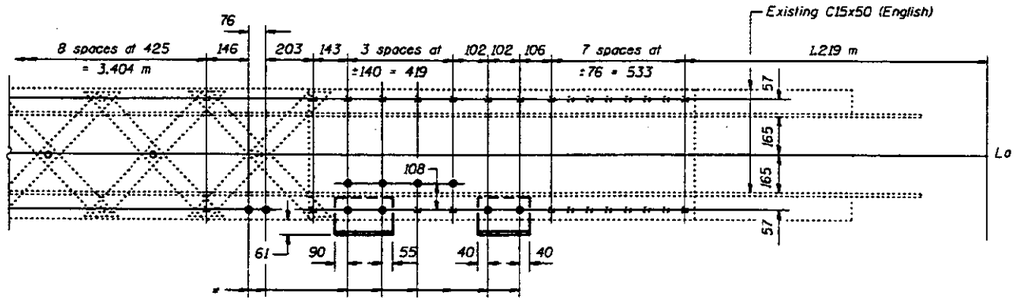

VIEW B-B

DESIGNED	LSH
CHECKED	TTBB
DRAWN	R. Doty
CHECKED	LSH TTBB

June 26, 1997

DESIGNED Raj. D. Kapur — ENGINEER OF BRIDGE DESIGN
PASSED Ralph E. Anderson — ENGINEER OF BRIDGES AND STRUCTURES

RAILING DETAILS
AT Lo - U1 -SOUTH TRUSS - SPAN 5
F.A.P. RT. 315 SECTION 140B-I-4
FULTON AND MASON COUNTIES
STATION 10+646.69

STATE OF ILLINOIS
DEPARTMENT OF TRANSPORTATION

F.A.P. NO.	SECTION	COUNTY	TOTAL SHEETS	SHEET NO.
F.A.P. 315	HOB-1-4	FULTON & MASON		98

SHEET NO. 80
123 SHEETS

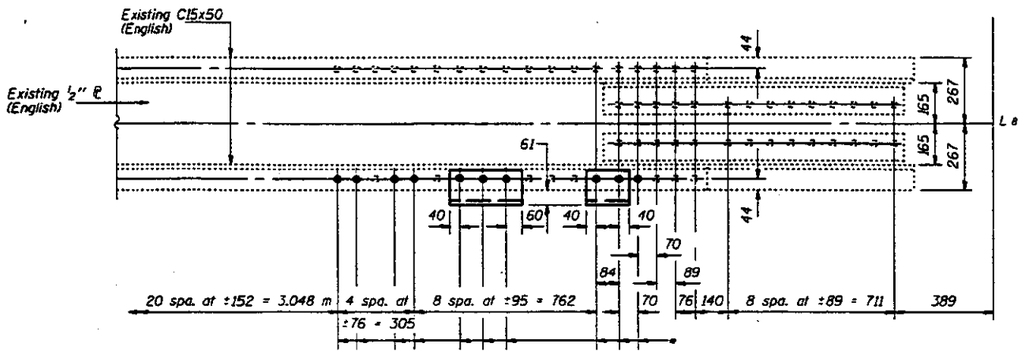

VIEW C-C

* ℄ Existing rivets to be removed and replaced with M22 H.S. Bolts. Cost is included with "Steel Bridge Rail, Type SM (Modified)."

** Cost included with "Steel Bridge Rail, Type SM (Modified)."

*** Shop drill 24 mm ϕ Holes in L 152 x 152 x 12.7 which will be used to drill 24 mm ϕ Hole for M22 H.S. Bolts in truss end post. Cost included with "Steel Bridge Rail, Type SM (Modified)."

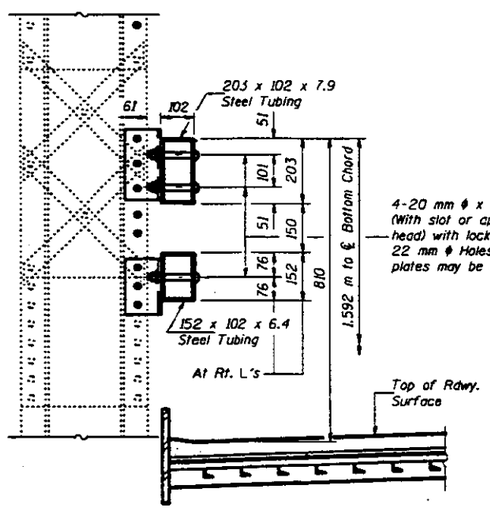

VIEW A-A

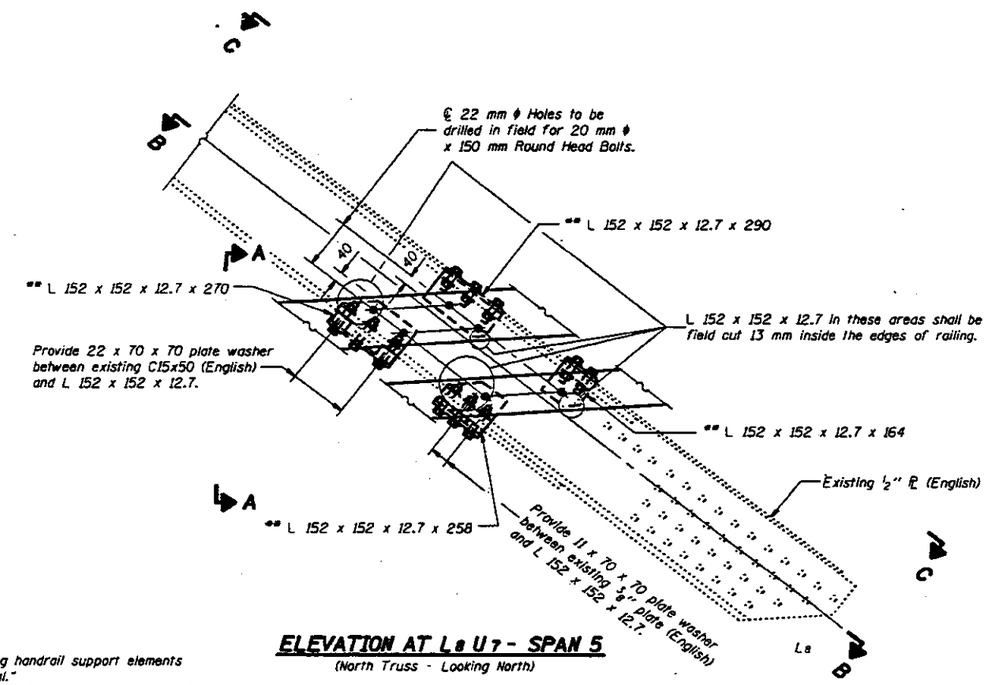

ELEVATION AT L a U 7 - SPAN 5
(North Truss - Looking North)

Notes: The cost of removal of existing handrail support elements is included with "Handrail Removal."
Tapered washers shall be provided for all attachments inside existing C15x50 (English).
Cost of field drilling holes is included with "Steel Bridge Rail, Type SM (Modified)."

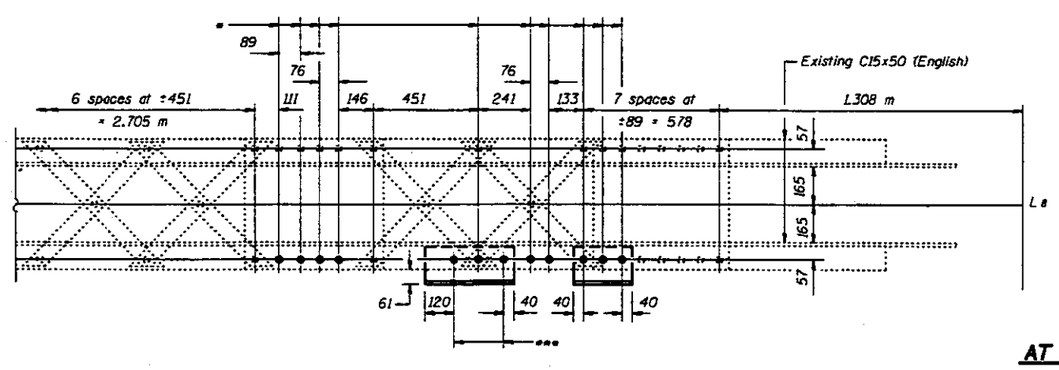

VIEW B-B

DESIGNED	LSH
CHECKED	TTBB
DRAWN	R. Doty
CHECKED	LSH TTBB

June 26, 1997
EXAMINED Craig D. Harper CHIEF ENGINEER OF BRIDGE DESIGN
PASSED Robert E. Cronkhright CHIEF ENGINEER OF BRIDGES AND STRUCTURES

RAILING DETAILS
AT L a - U 7 -NORTH TRUSS - SPAN 5
F.A.P. RT. 315 SECTION 140B-I-4
FULTON AND MASON COUNTIES
STATION 10+646.69

STATE OF ILLINOIS
DEPARTMENT OF TRANSPORTATION

F.A.P. 315	140B-I-4	FULTON & MASON		99

SHEET NO. 81
123 SHEETS

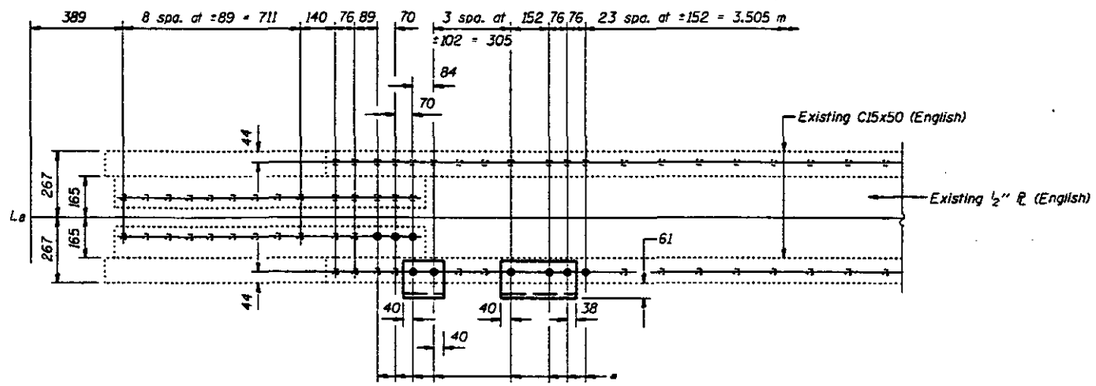

VIEW C-C

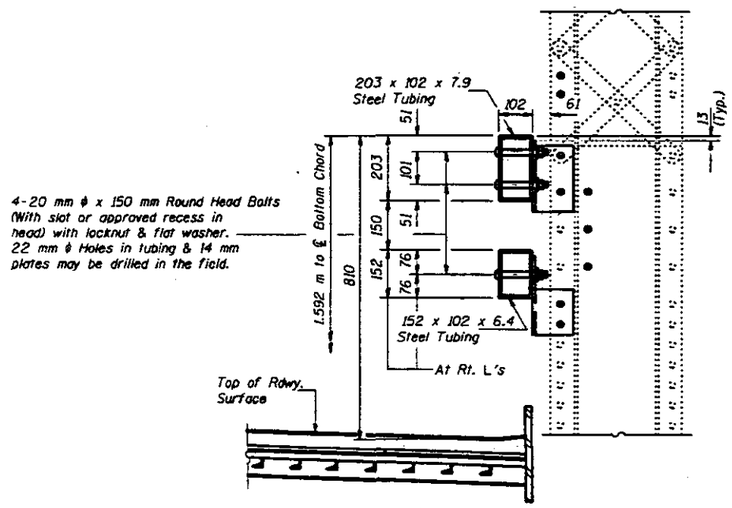

VIEW A-A

* ℄ Existing rivets to be removed and replaced with M22 H.S. Bolts. Cost is included with "Steel Bridge Rail, Type SM (Modified)."

** Cost included with "Steel Bridge Rail, Type SM (Modified)."

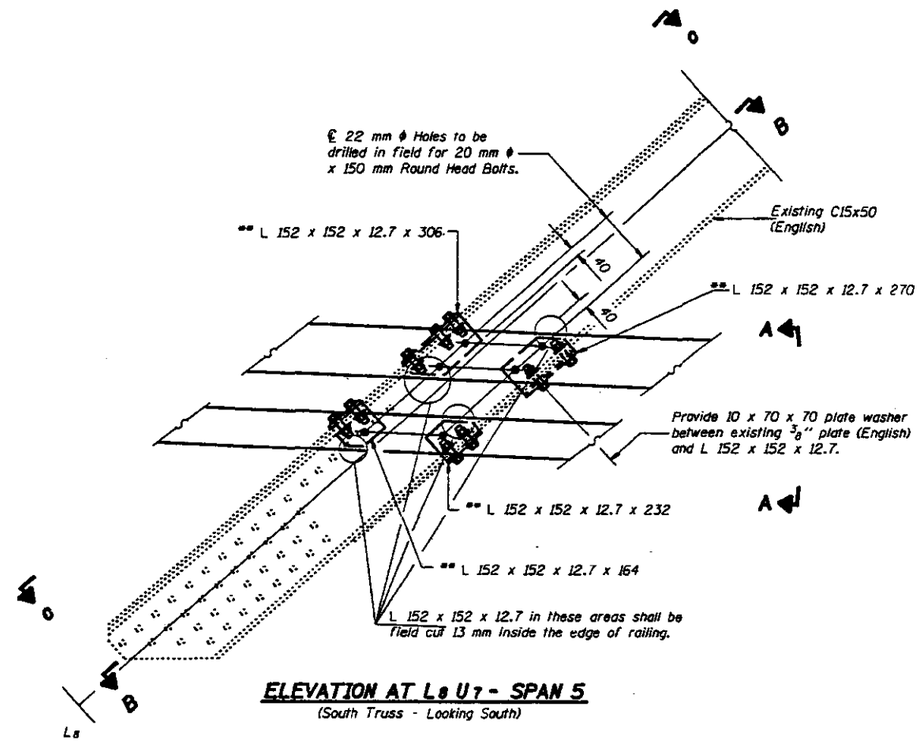

ELEVATION AT La U7 - SPAN 5
(South Truss - Looking South)

Notes: The cost of removal of existing handrail support elements is included with "Handrail Removal."
Tapered washers shall be provided for all attachments inside existing C15x50 (English).
The cost of field drilling holes is included with "Steel Bridge Rail, Type SM (Modified)."

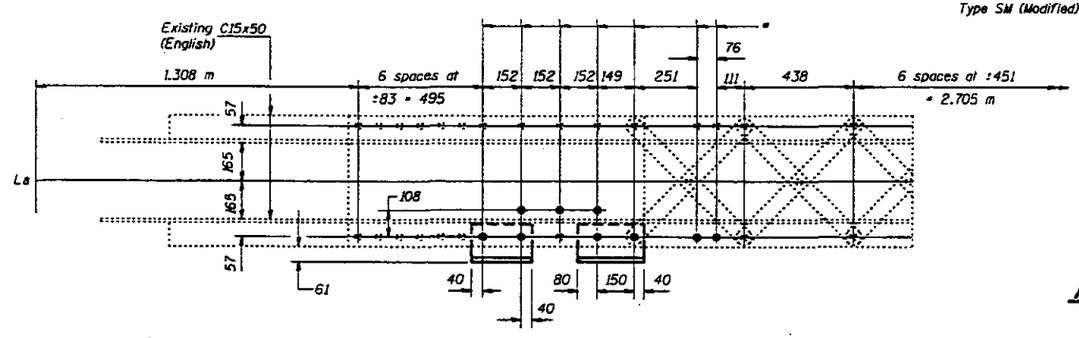

VIEW B-B

DESIGNED	LJH
CHECKED	TTBe
DRAWN	R. Doty
CHECKED	LJH TTBe

June 26, 1997
CHANGED Craig L. Kaspar — ENGINEER OF BRIDGE DESIGN
PASSED Ralph E. Anderson — ENGINEER OF BRIDGES AND STRUCTURES

RAILING DETAILS
AT La - U7 -SOUTH TRUSS - SPAN 5
F.A.P. RT. 315 SECTION 140B-I-4
FULTON AND MASON COUNTIES
STATION 10+646.69

STATE OF ILLINOIS
DEPARTMENT OF TRANSPORTATION

F.A.P. 315	HOB-1-4	FULTON & MASON		100	SHEET NO. 82 / 123 SHEETS

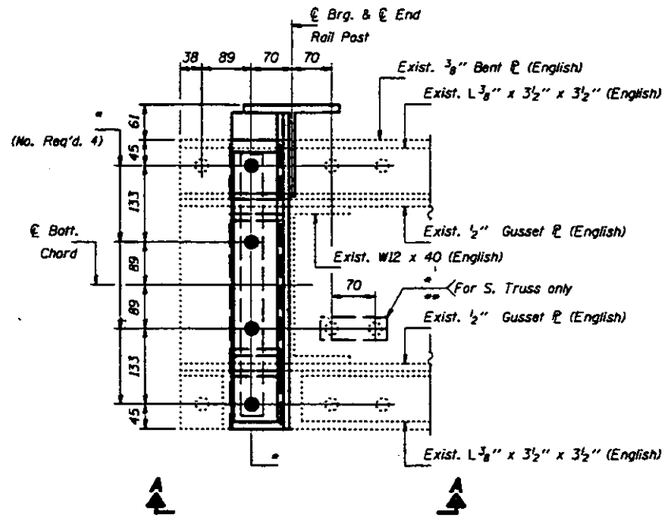

TOP VIEW
(South Truss shown)
(North Truss opposite hand)

* Replace 22 mm ϕ Rivets with M22 H.S. Bolts. Cost is included with "Steel Bridge Rail, Type SM (Modified)".
** The cost of removal of Existing L 6" x 3" x 1/2" x 6 1/2" (English) is included with "Handrail Removal".

Notes: The cost of all new Structural Steel and H.S. Bolts shown on this sheet is included in "Steel Bridge Rail, Type SM (Modified)".
The cost to remove Existing End Rail Post is included with "Handrail Removal".
For Railing Details see sheet #77 of 123.

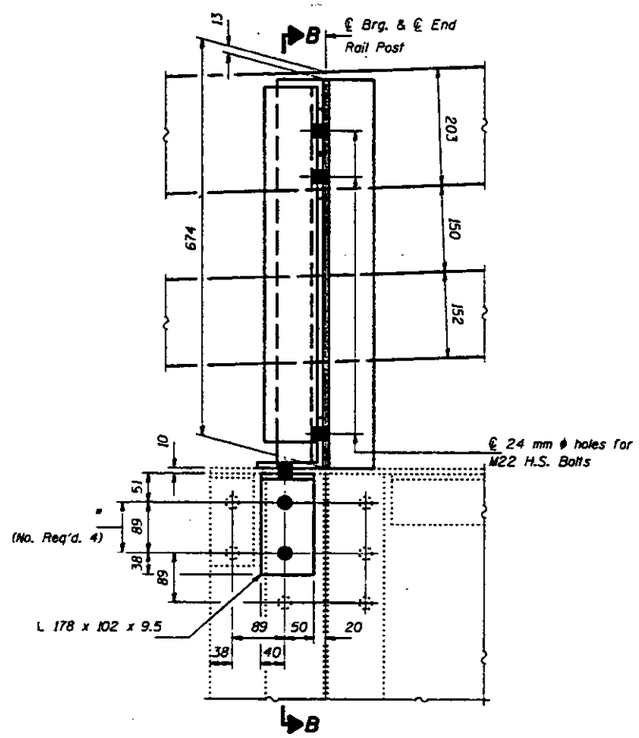

VIEW A-A

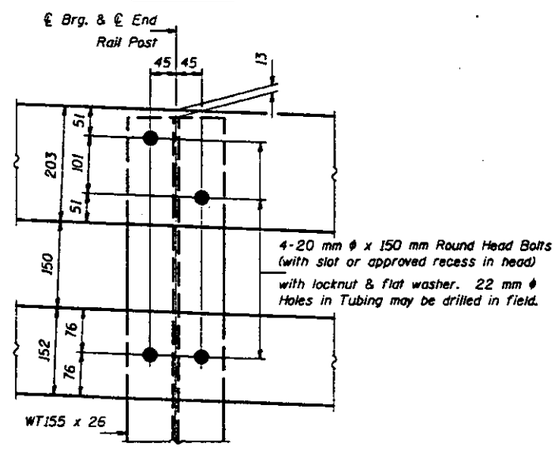

VIEW C-C

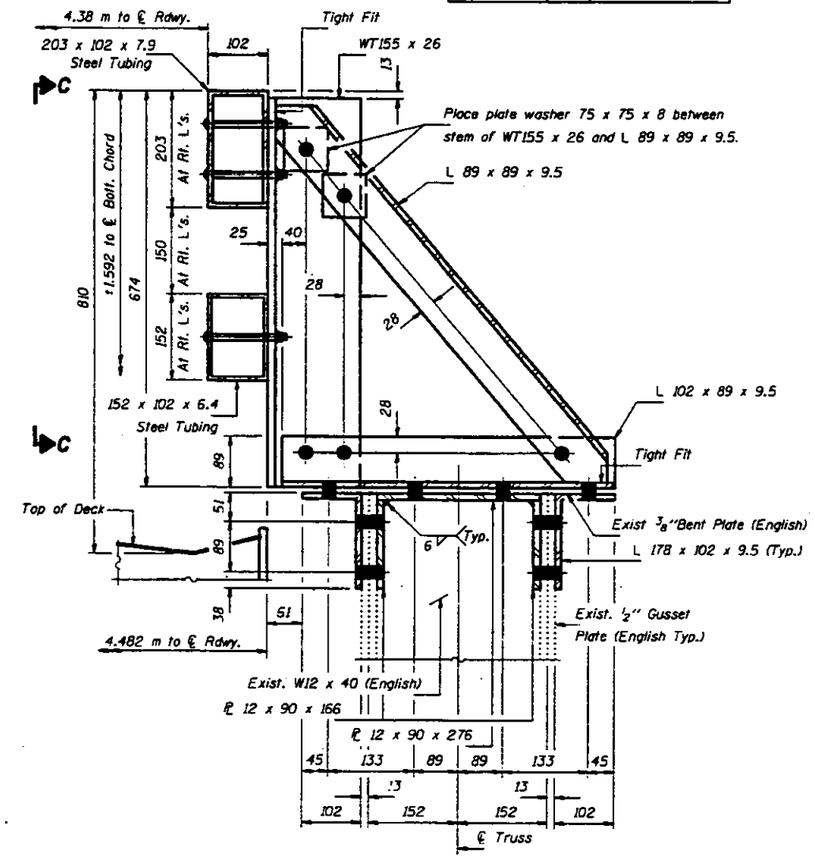

SECTION B-B

DESIGNED	LSH
CHECKED	TTBB
DRAWN	John F. Schneller Jr.
CHECKED	LSH TTBB

June 26, 1997
CHANGED
PASSED

END RAIL POST DETAILS
SPAN #5
F.A.P. RT. 315 SEC. 140B-I-4
FULTON AND MASON COUNTIES
STA. 10+646.69

F.A.P. NO.	SECTION	COUNTY	TOTAL SHEETS	SHEET NO.
F.A.P. 315	140B-1-4	FULTON & MASON		101

SHEET NO. 83
123 SHEETS

STATE OF ILLINOIS
DEPARTMENT OF TRANSPORTATION

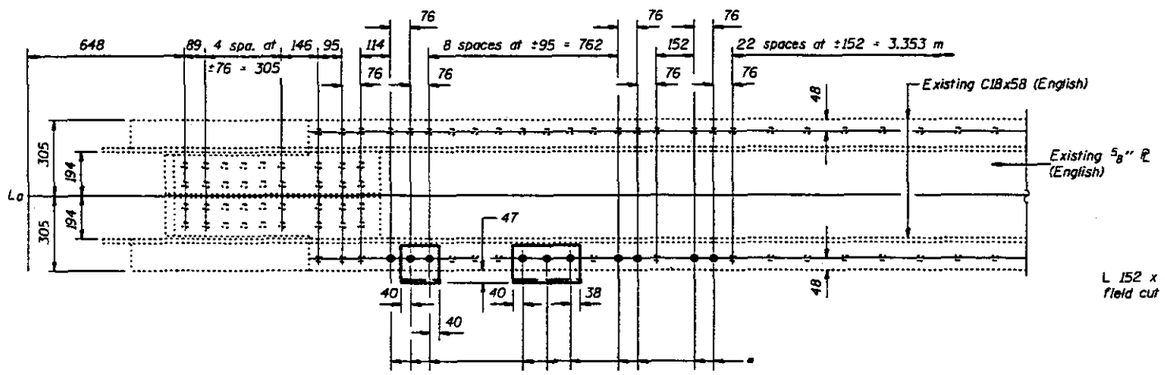

VIEW C-C

* ℄ Existing rivets to be removed and replaced with M22 H.S. Bolts. Cost is included with "Steel Bridge Rail, Type SM (Modified)."

** Cost included with "Steel Bridge Rail, Type SM (Modified)."

*** Shop drill 24 mm ϕ Holes in L 152 x 152 x 12.7 which will be used as a template to drill 24 mm ϕ Holes in truss end post. Cost included with "Steel Bridge Rail, Type SM (Modified)."

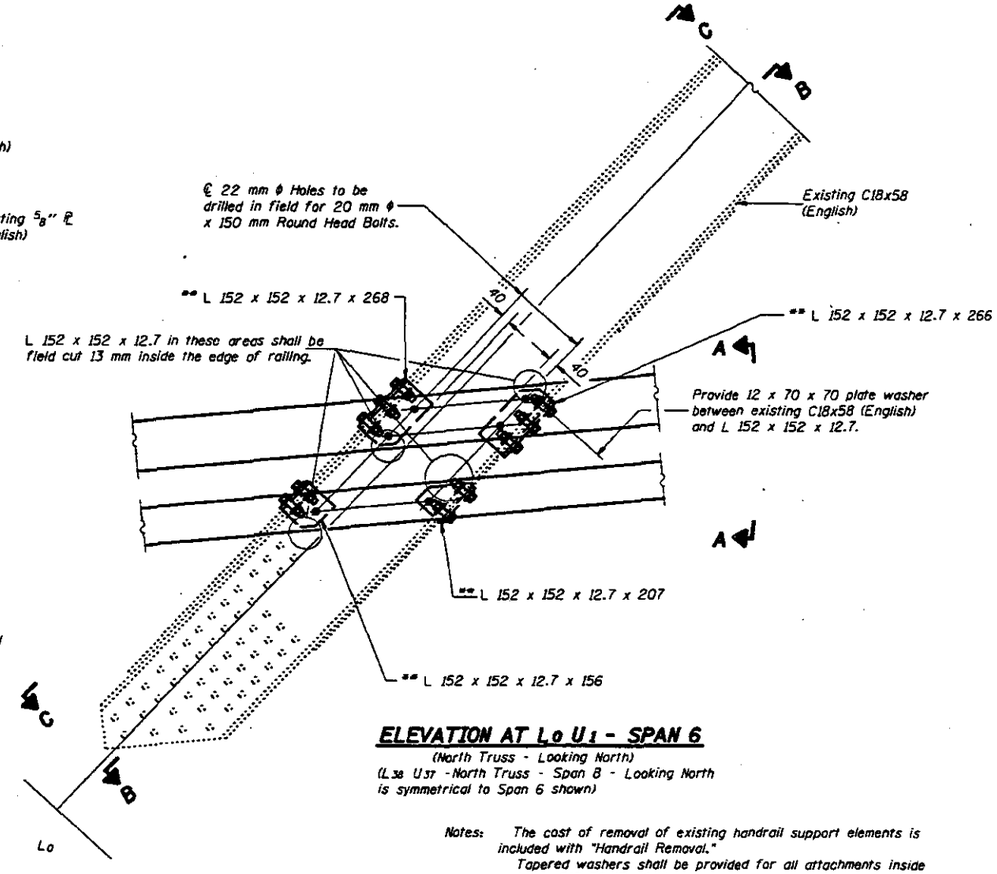

ELEVATION AT $L_0 U_1$ - SPAN 6

(North Truss - Looking North)
(L_{38} U_{37} -North Truss - Span 8 - Looking North is symmetrical to Span 6 shown)

Notes: The cost of removal of existing handrail support elements is included with "Handrail Removal."
Tapered washers shall be provided for all attachments inside existing C18x58 (English).
The cost of field drilling holes is included with "Steel Bridge Rail, Type SM (Modified)."

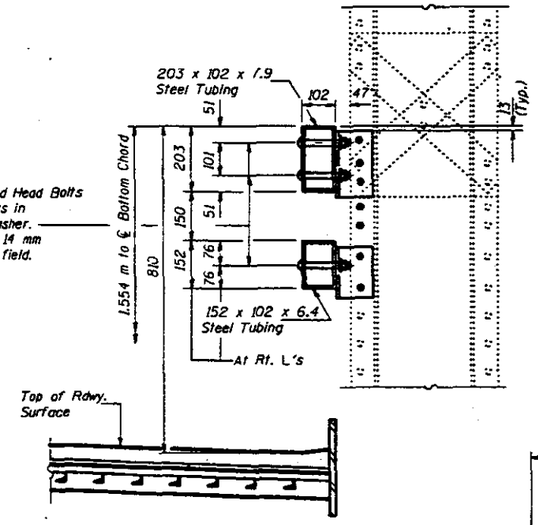

4-20 mm ϕ x 150 mm Round Head Bolts (With slot or approved recess in head) with locknut & flat washer. 22 mm ϕ Holes in tubing & 14 mm plates may be drilled in the field.

VIEW A-A

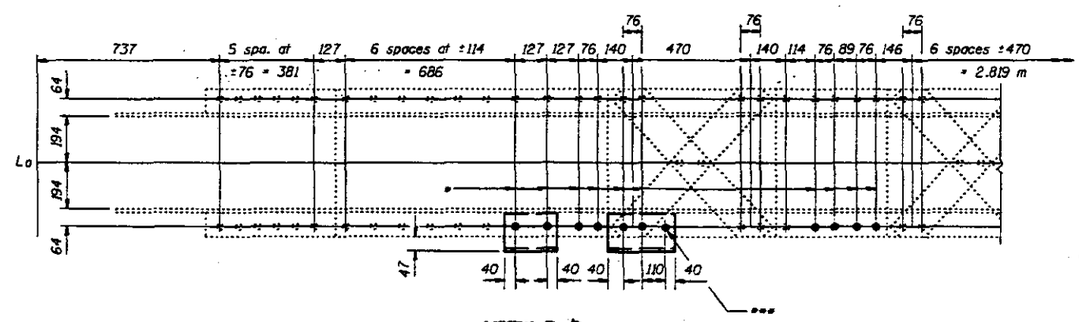

VIEW B-B

DESIGNED	LSH
CHECKED	TBE
DRAWN	R. Doty
CHECKED	LSH TBE

June 26, 1997

ENGINEER OF TRUSS DESIGN

ENGINEER OF BRIDGES AND STRUCTURES

RAILING DETAILS
AT L_0 - U_1 -NORTH TRUSS - SPAN 6
& AT L_{38}- U_{37}-NORTH TRUSS - SPAN 8
F.A.P. RT. 315 SECTION 140B-1-4
FULTON AND MASON COUNTIES
STATION 10+646.69

STATE OF ILLINOIS
DEPARTMENT OF TRANSPORTATION

F.A.P. 315	140B-1-4	FULTON & MASON		102

SHEET NO. 84
123 SHEETS

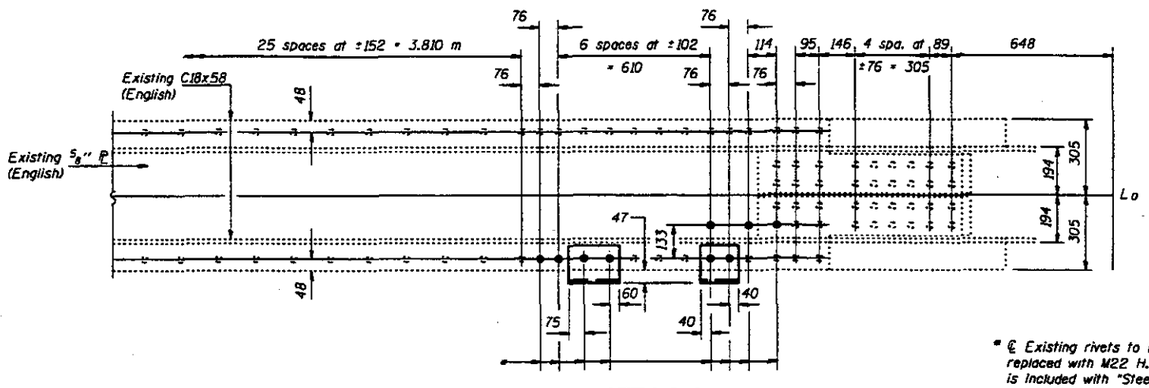

VIEW C-C

* ℄ Existing rivets to be removed and replaced with M22 H.S. Bolts. Cost is included with "Steel Bridge Rail, Type SM (Modified)."

** Cost included with "Steel Bridge Rail, Type SM (Modified)."

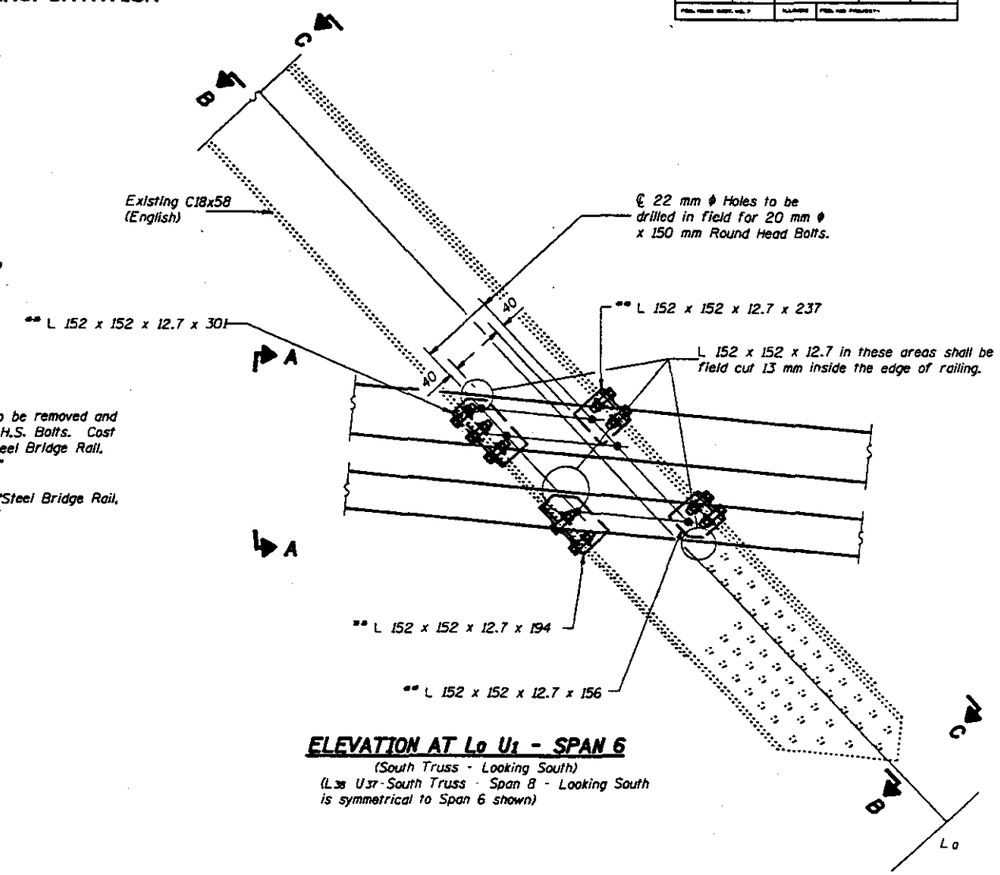

ELEVATION AT L_0 U_1 - SPAN 6

(South Truss - Looking South)
(L_{38} U_{37} - South Truss - Span 8 - Looking South is symmetrical to Span 6 shown)

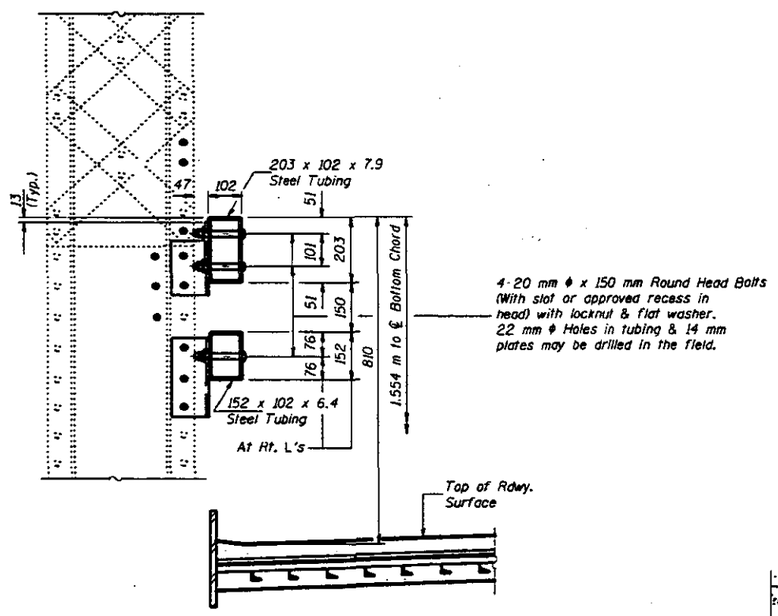

4-20 mm ϕ x 150 mm Round Head Bolts (With slot or approved recess in head) with locknut & flat washer. 22 mm ϕ Holes in tubing & 14 mm plates may be drilled in the field.

VIEW A-A

Notes: The cost of removal of existing handrail support elements is included with "Handrail Removal."
Tapered washers shall be provided for all attachments inside existing C18x58 (English).
The cost of field drilling holes is included with "Steel Bridge Rail, Type SM (Modified)."

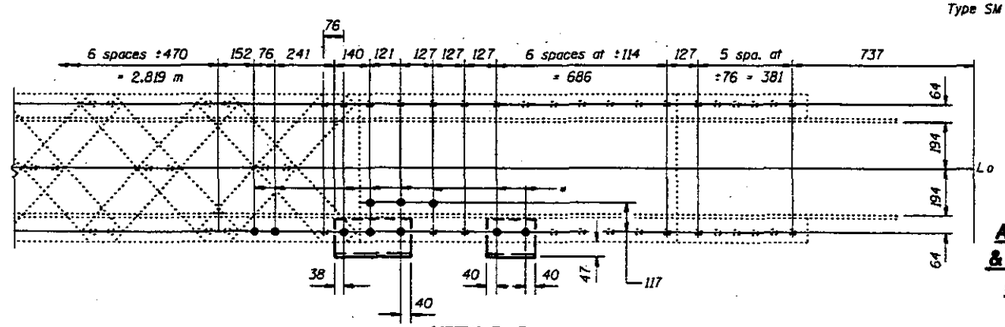

VIEW B-B

DESIGNED	L S H
CHECKED	TTB
DRAWN	R. Doty
CHECKED	L S H TTB

June 26, 1997
EXAMINED Engineer of Bridge Design
PASSED Engineer of Bridges and Structures

RAILING DETAILS
AT L_0 - U_1 - SOUTH TRUSS - SPAN 6
& AT L_{38} - U_{37} - SOUTH TRUSS - SPAN 8
F.A.P. RT. 315 SECTION 140B-1-4
FULTON AND MASON COUNTIES
STATION 10+646.69

STATE OF ILLINOIS
DEPARTMENT OF TRANSPORTATION

F.A.P. 315	140B-I-4	FULTON & MASON		103

SHEET NO. 85
123 SHEETS

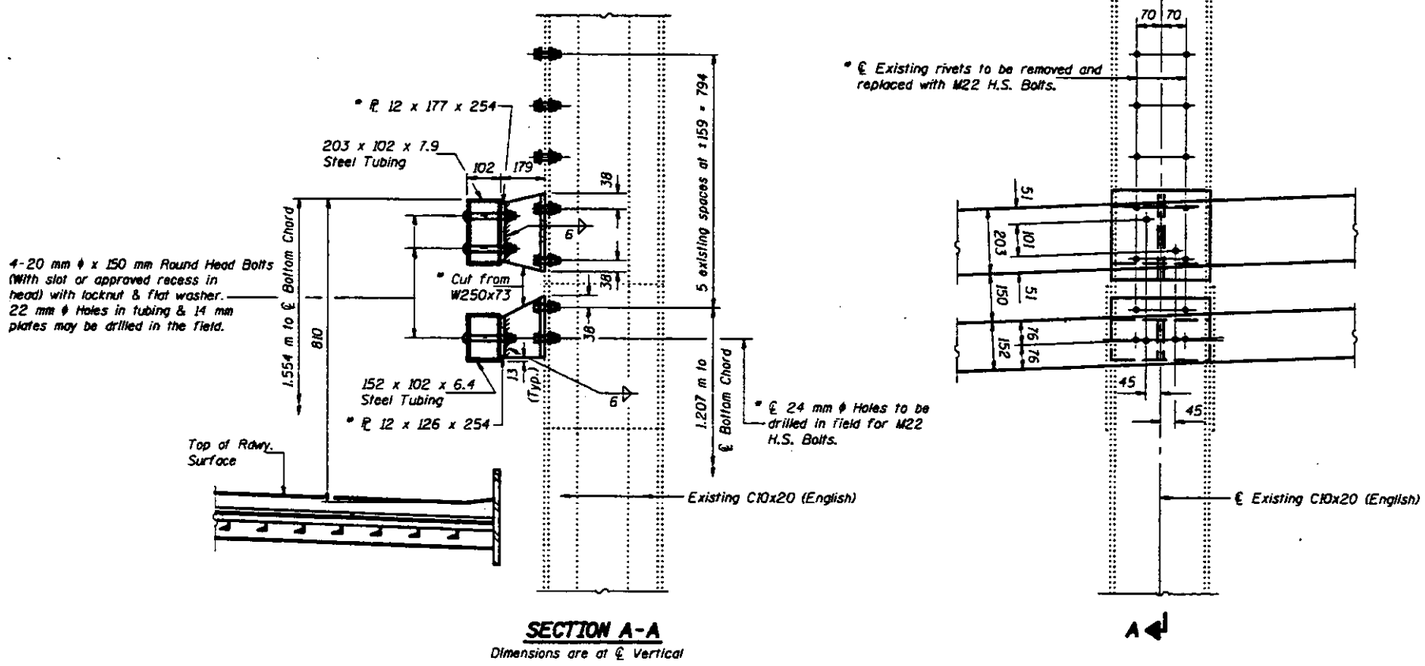

SECTION A-A
Dimensions are at ℄ Vertical

RAIL CONNECTION AT L_8 AND L_{30}
(L_8 - North Truss - Looking North) (L_{30} - Opposite Hand)

Note: The cost of removal of existing handrail support elements is included with "Handrail Removal."

* Cost is included with "Steel Bridge Rail, Type SM (Modified)."

DESIGNED	LSH
CHECKED	TTBB
DRAWN	R. Doty
CHECKED	LSH TTBB

June 26, 1997

ENGINEER OF BRIDGE DESIGN

ENGINEER OF BRIDGES AND STRUCTURES

RAILING DETAILS
AT L_8 AND L_{30} - NORTH TRUSS
F.A.P. RT. 315 SECTION 140B-I-4
FULTON AND MASON COUNTIES
STATION 10+646.69

STATE OF ILLINOIS
DEPARTMENT OF TRANSPORTATION

F.A.P. 315	140B-I-4	FULTON & MASON		104	SHEET NO. 86 123 SHEETS

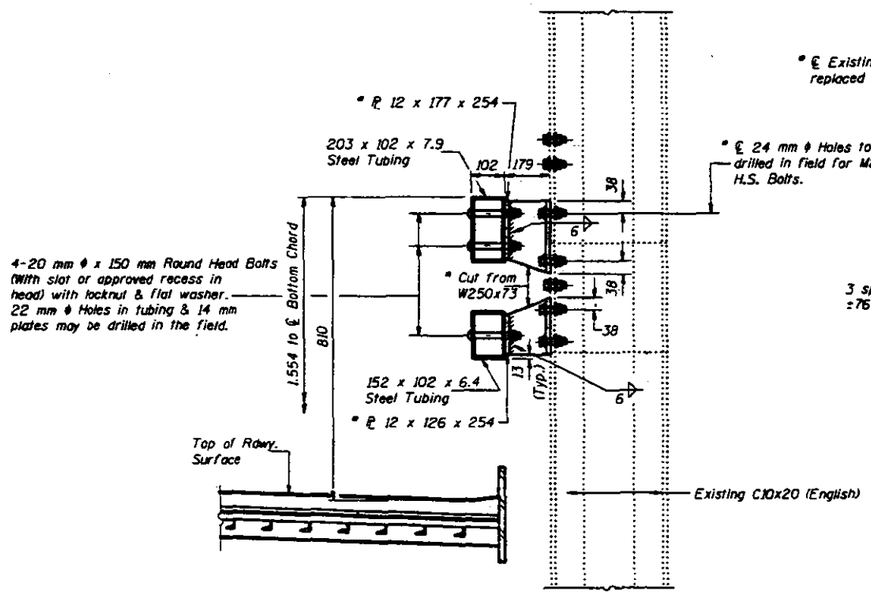

SECTION A-A
Dimensions are at ℄ Vertical

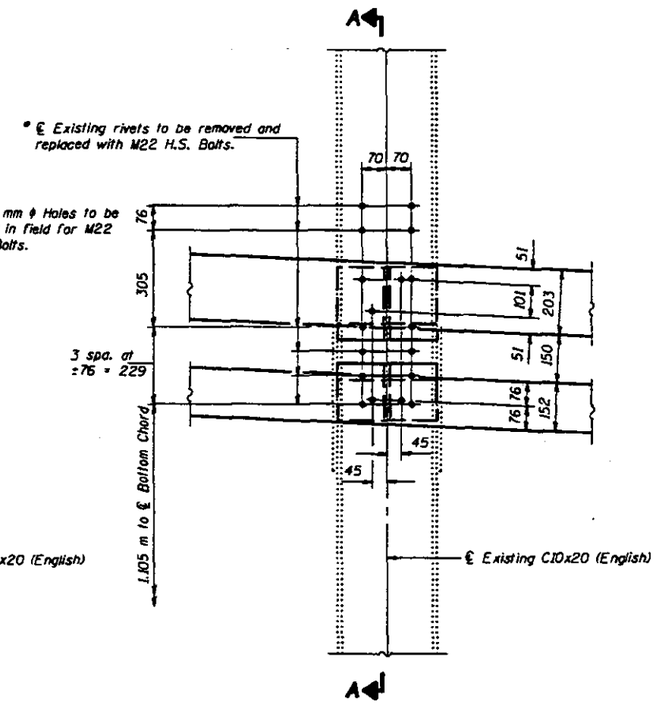

RAIL CONNECTION AT L_8 AND L_{30}
(L_8 - South Truss - Looking South) (L_{30} - Opposite Hand)

Note: The cost of removal of existing handrail support elements is included with "Handrail Removal."

* Cost is included with "Steel Bridge Rail, Type SM (Modified)."

DESIGNED	LSH
CHECKED	TTBB
DRAWN	R. Doty
CHECKED	LSH TTBB

June 26, 1997

CHIEF OF STEEL DESIGN

CHIEF OF BRIDGES AND STRUCTURES

RAILING DETAILS
AT L_8 AND L_{30} - SOUTH TRUSS
F.A.P. RT. 315 SECTION 140B-I-4
FULTON AND MASON COUNTIES
STATION 10+646.69

STATE OF ILLINOIS
DEPARTMENT OF TRANSPORTATION

F.A.P. 315	140B-I-4	FULTON & MASON		105	SHEET NO. 87 / 123 SHEETS

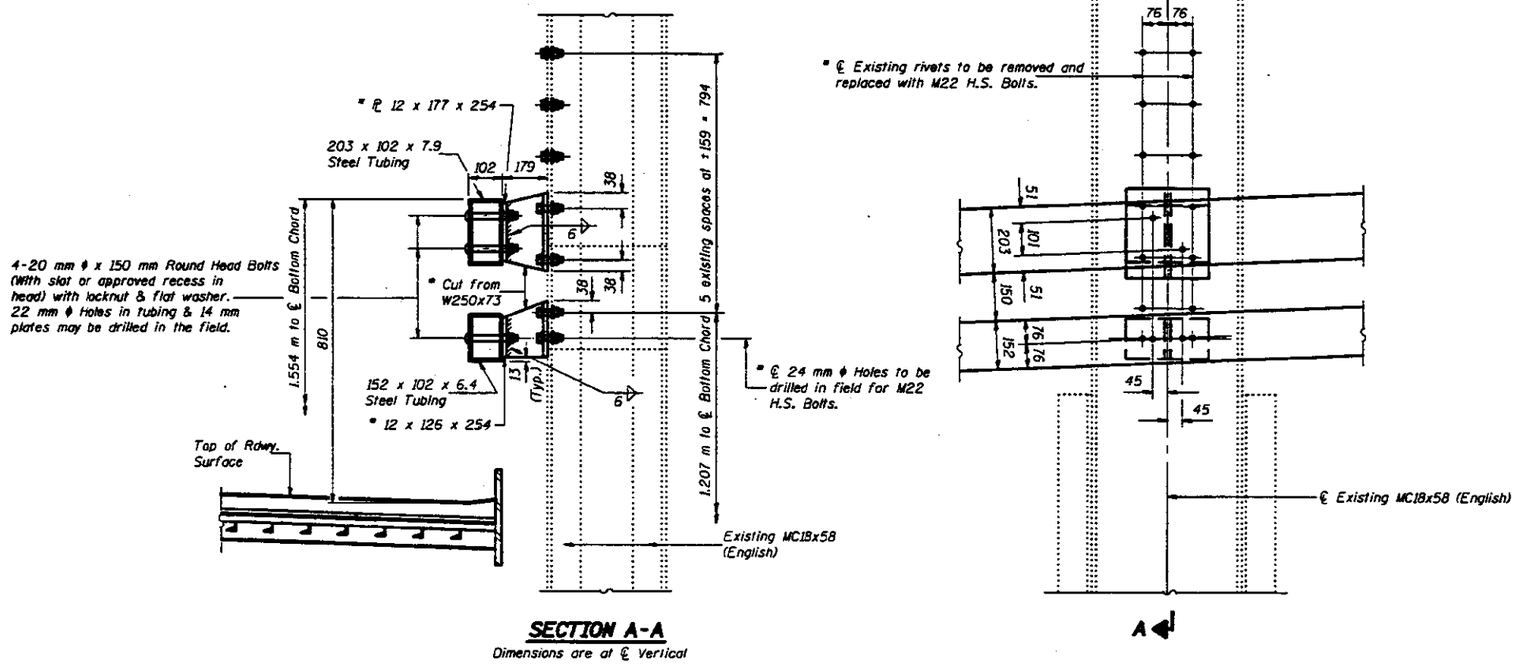

SECTION A-A
Dimensions are at ℄ Vertical

RAIL CONNECTION AT L_{12} AND L_{26}
(L_{12} - North Truss - Looking North) (L_{26} - Opposite Hand)

Note: The cost of removal of existing handrail support elements is included with "Handrail Removal."

* Cost included with "Steel Bridge Rail, Type SM (Modified)."

DESIGNED	L S H
CHECKED	TTBB
DRAWN	R. Doty
CHECKED	L S H TTBB

June 26, 1997

ENGINEER OF BRIDGE DESIGN

ENGINEER OF BRIDGES AND STRUCTURES

RAILING DETAILS
AT L_{12} & L_{26} - NORTH TRUSS
F.A.P. RT. 315 SECTION 140B-I-4
FULTON AND MASON COUNTIES
STATION 10+646.69

STATE OF ILLINOIS
DEPARTMENT OF TRANSPORTATION

F.A.P. 315	140B-1-4	FULTON & MASON		106

SHEET NO. 88
123 SHEETS

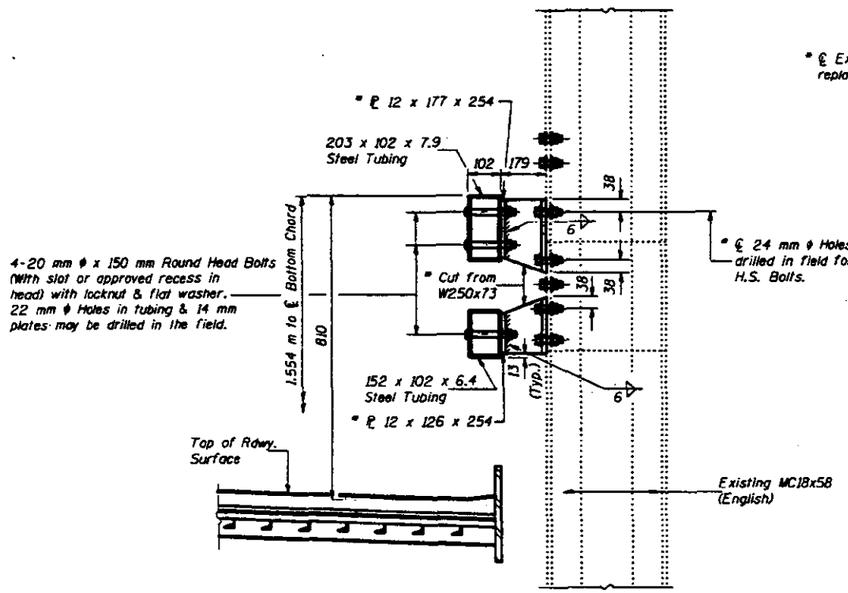

SECTION A-A
Dimensions are at ℄ Vertical

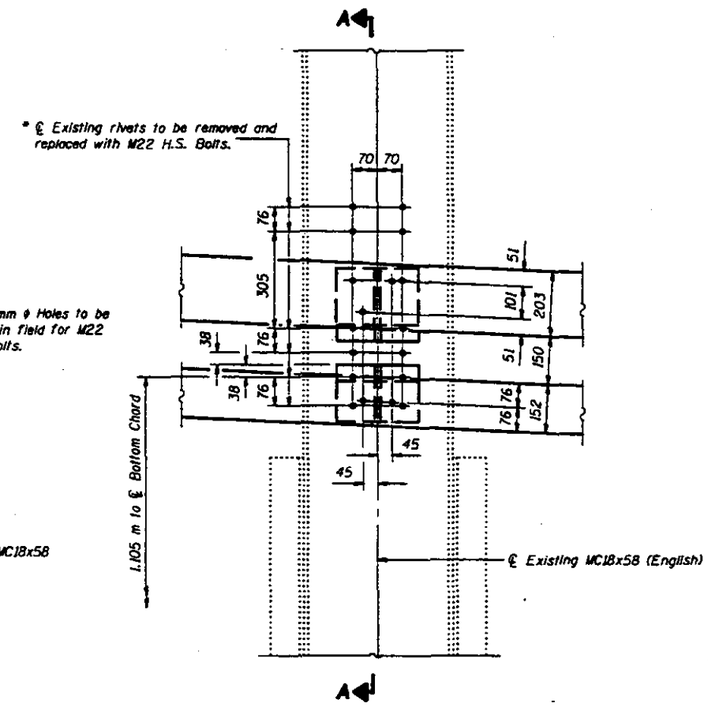

Note: The cost of removal of existing handrail support elements is included with "Handrail Removal."

* Cost included with "Steel Bridge Rail. Type SM (Modified)."

RAIL CONNECTION AT L_{12} AND L_{26}
(L_{12} - South Truss - Looking South) (L_{26} - Opposite Hand)

DESIGNED	LSH
CHECKED	TTBB
DRAWN	R. Daty
CHECKED	LSH TTBB

June 26, 1997

DRAWING ENGINEER OF BRIDGE DESIGN

PASSED ENGINEER OF BRIDGES AND STRUCTURES

RAILING DETAILS
AT L_{12} & L_{26} - SOUTH TRUSS
F.A.P. RT. 315 SECTION 140B-1-4
FULTON AND MASON COUNTIES
STATION 10+646.69

STATE OF ILLINOIS
DEPARTMENT OF TRANSPORTATION

F.A.P. NO.	SECTION	COUNTY	TOTAL SHEETS	SHEET NO.
F.A.P. 315	140B-I-4	FULTON & MASON		107

SHEET NO. 89
123 SHEETS

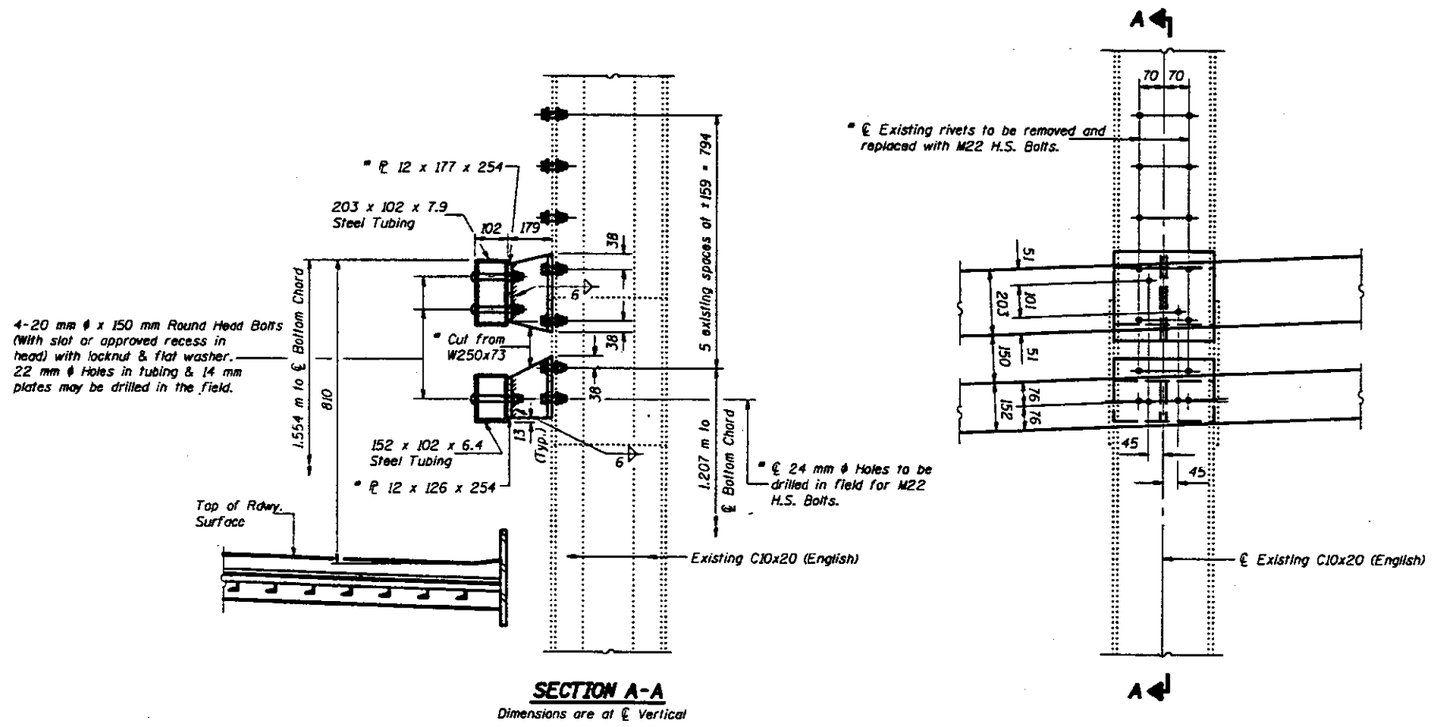

Note: The cost of removal of existing handrail support elements is included with "Handrail Removal."

* Cost is included with "Steel Bridge Rail, Type SM (Modified)."

SECTION A-A
Dimensions are at ℄ Vertical

RAIL CONNECTION AT L_{18} AND L_{22}
(L_{18} - North Truss - Looking North) (L_{22} - Opposite Hand)

DESIGNED	L S H
CHECKED	TTBB
DRAWN	R. Doty
CHECKED	L S H TTBB

June 26, 1997

DESIGNED Greg D. Harper — ENGINEER OF BRIDGE DESIGN
PASSED Ralph E. Anderson — ENGINEER OF BRIDGES AND STRUCTURES

RAILING DETAILS
AT L_{18} AND L_{22} - NORTH TRUSS
F.A.P. RT. 315 SECTION 140B-I-4
FULTON AND MASON COUNTIES
STATION 10+646.69

STATE OF ILLINOIS
DEPARTMENT OF TRANSPORTATION

F.A.P. 315	140B-I-4	FULTON & MASON		108	SHEET NO. 90 / 123 SHEETS

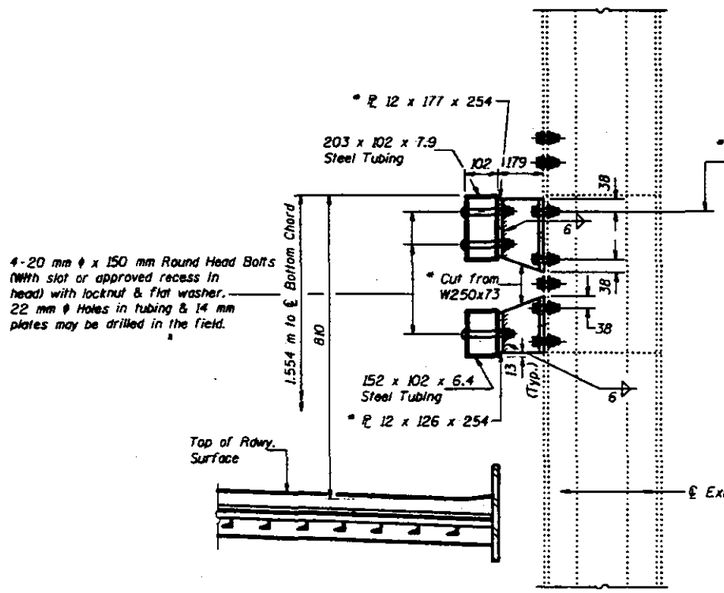

SECTION A-A
Dimensions are at ℄ Vertical

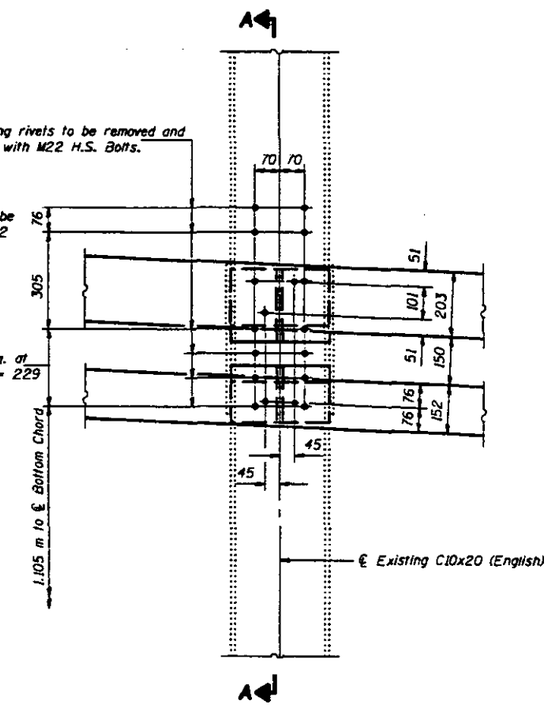

RAIL CONNECTION AT L_{ss} AND L_{zz}
(L_{ss} - South Truss - Looking South) (L_{zz} - Opposite Hand)

Note: The cost of removal of existing handrail support elements is included with "Handrail Removal."

* Cost is included with "Steel Bridge Rail, Type SM (Modified)."

DESIGNED	LSH
CHECKED	TTBB
DRAWN	R. Daty
CHECKED	LSH TTBB

June 26, 1997

DAMIEN J. KEGER
ENGINEER OF BRIDGE DESIGN

PATRICK E. ANDERSON
ENGINEER OF BRIDGES AND STRUCTURES

RAILING DETAILS
AT L_{ss} AND L_{zz} - SOUTH TRUSS
F.A.P. RT. 315 SECTION 140B-I-4
FULTON AND MASON COUNTIES
STATION 10+646.69

STATE OF ILLINOIS
DEPARTMENT OF TRANSPORTATION

F.A.P. 315	140B-1-4	FULTON & MASON		109	SHEET NO. 91 / 123 SHEETS

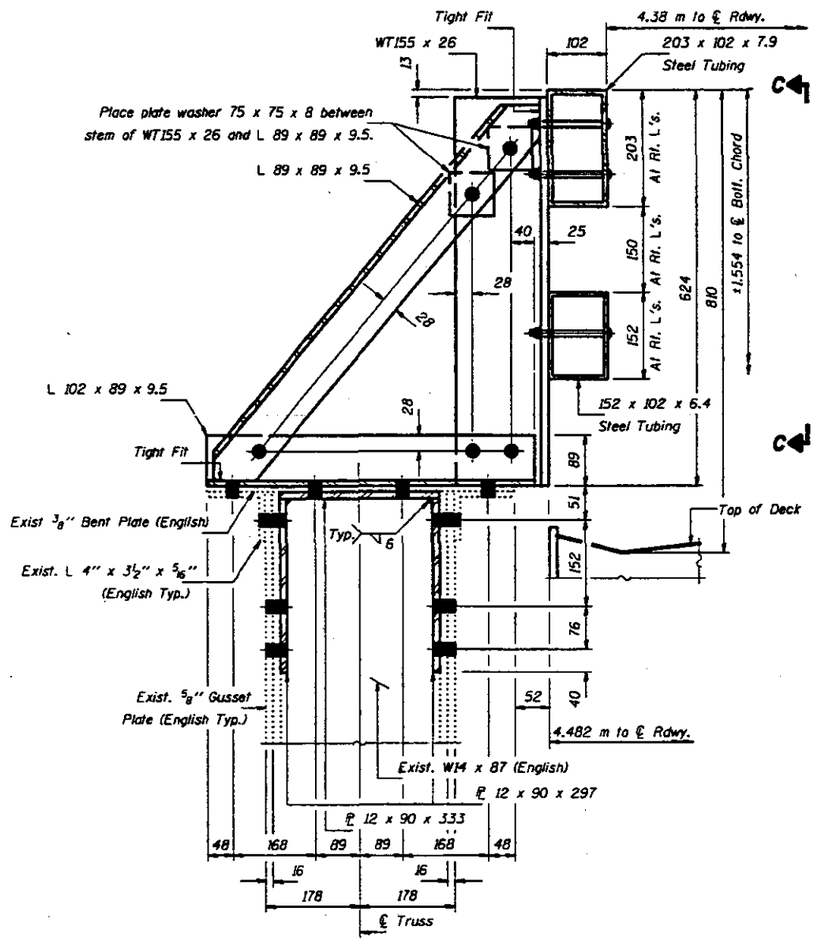

SECTION B-B

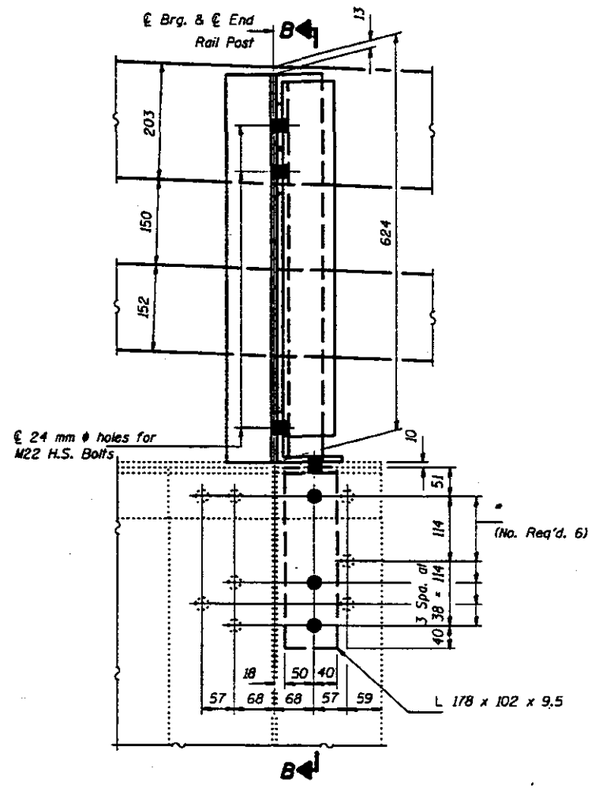

VIEW A-A

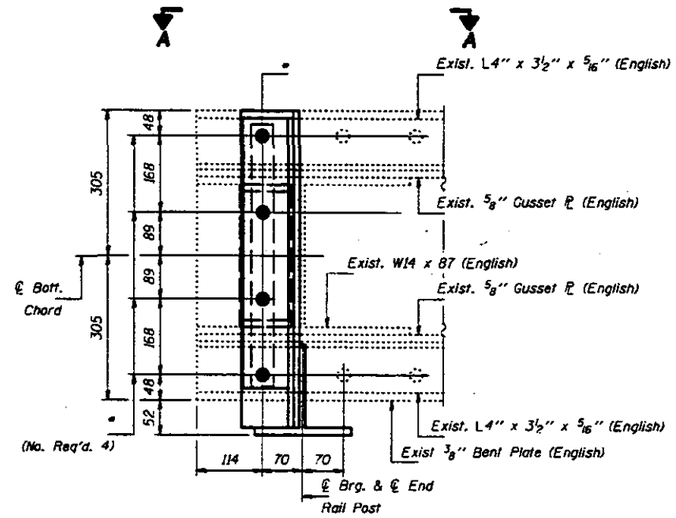

TOP VIEW

(Span #6, East Brg. at Pier #5, North Truss shown)
(E. Abut., Span #8, North Truss opposite hand)

* Replace 22 mm ϕ Rivets with M22 H.S. Bolts. Cost is included with "Steel Bridge Rail, Type SM (Modified)".

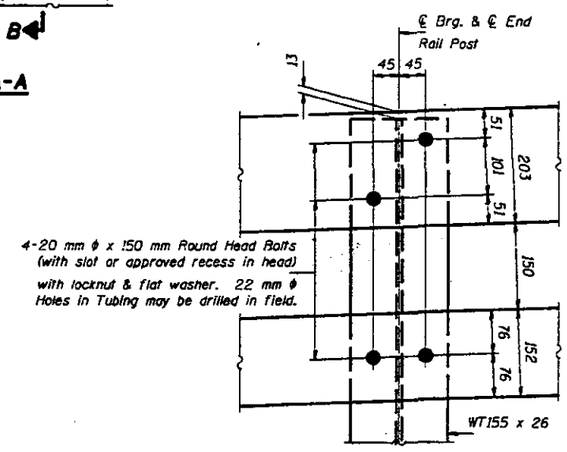

VIEW C-C

Notes: The cost of all new Structural Steel and H.S. Bolts shown on this sheet is included in "Steel Bridge Rail, Type SM (Modified)".
The cost to remove Existing End Rail Post is included with "Handrail Removal".
For Railing Details see sheet #77 of 123.

DESIGNED	LSH
CHECKED	TTBB
DRAWN	John F. Schneller Jr.
CHECKED	LSH TTBB

June 26, 1997

DESIGNED Engineer of Bridge Design
PASSED Engineer of Bridges and Structures

END RAIL POST DETAILS
SPAN #6 AT PIER #5
SPAN #8 AT EAST ABUTMENT
F.A.P. RT. 315 SEC. 140B-1-4
FULTON AND MASON COUNTIES
STA. 10+646.69

STATE OF ILLINOIS
DEPARTMENT OF TRANSPORTATION

** Plates shall be AASHTO M270, Grade 345.

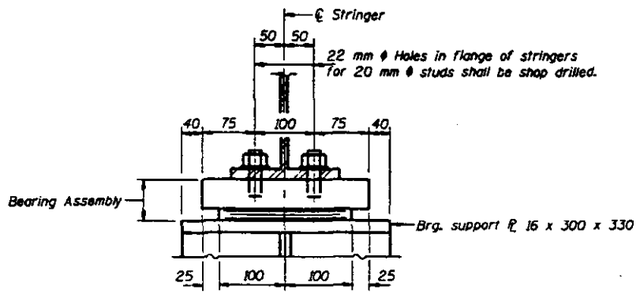

ELEVATION OF RELIEF JOINT BEARING

(Typical for all relief joints)
(Looking East at locations on West side of ℄ Span 7)
(Looking West at locations on East side of ℄ Span 7)

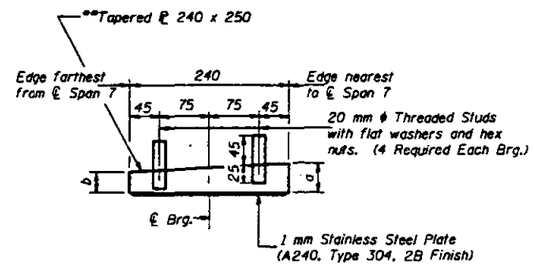

TOP BEARING ASSEMBLY

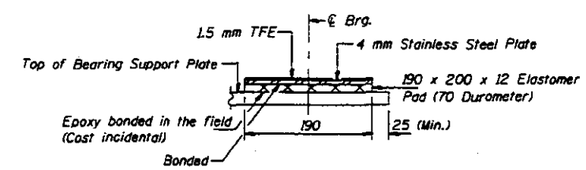

BOTTOM BEARING ASSEMBLY

(Typical for all relief joints)
(Looking North at locations on West side of ℄ Span 7)
(Looking South at locations on East side of ℄ Span 7)

Notes: The 1.5 mm TFE sheet shall be bonded directly to the 4 mm stainless steel plate with a two-component, medium viscosity epoxy resin, conforming to the requirements of the Federal Specification MMM-A-134, Type I. The bond agent shall be applied on the full area of the contact surfaces.

TABLE OF a & b DIMENSIONS

Location		a (mm)	b (mm)	No. Brgs. Req'd.
Spans 5, 6 & 8		36	24	54
Span 7	L15 & L23	34	26	12
	L17 & L21	31	30	12
	L19	31	29	6

BILL OF MATERIAL

Item	Unit	Total
Elastomeric Bearing Assembly, Type II (Modified)	Each	84

DESIGNED	LSH
CHECKED	JLC
DRAWN	R. Doty
CHECKED	LSH TTKS

June 26, 1997

DIVISION OF HIGHWAY DESIGN

DIVISION OF BRIDGES AND STRUCTURES

BEARING DETAILS AT RELIEF JOINTS
F.A.P. RT. 315 SECTION 140B-1-4
FULTON AND MASON COUNTIES
STATION 10+646.69

STATE OF ILLINOIS
DEPARTMENT OF TRANSPORTATION

ROUTE NO.	SECTION	COUNTY	TOTAL SHEETS	SHEET NO.
F.A.P. 315	140B-1-4	FULTON & MASON		111

SHEET NO. 93
123 SHEETS

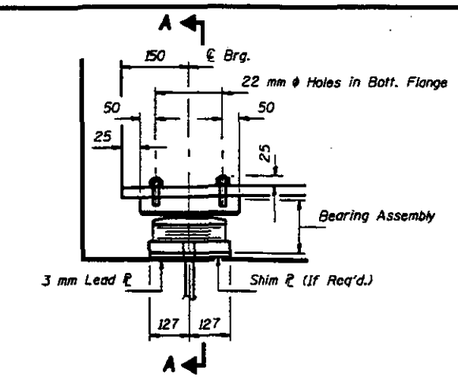

ELEVATION

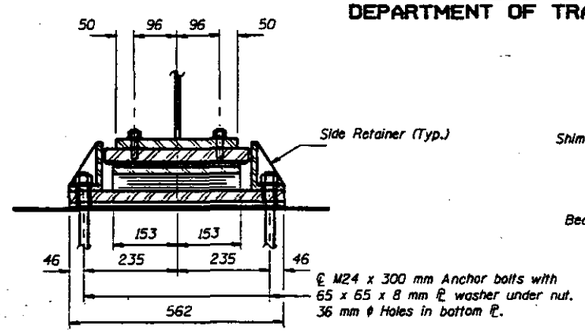

SECTION A-A

TYPE II TFE ELASTOMERIC EXP. BRG. AT WEST ABUTMENT

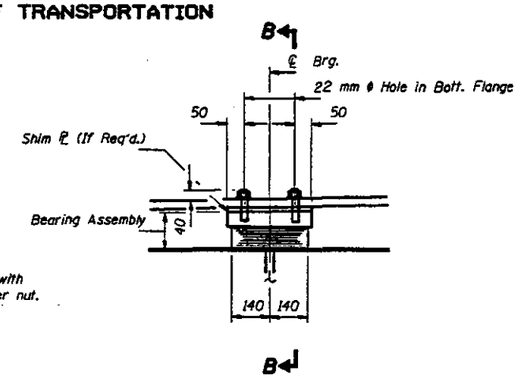

ELEVATION

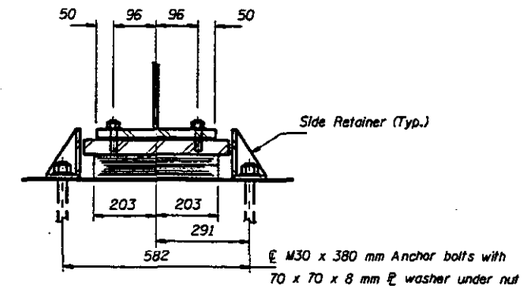

SECTION B-B

TYPE I ELASTOMERIC EXP. BRG. AT PIERS #1 & #3

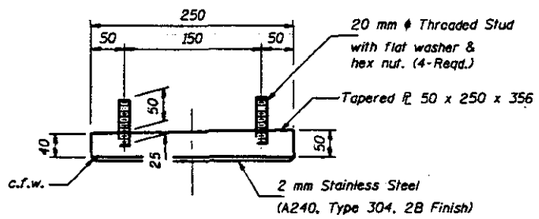

TOP BEARING ASSEMBLY

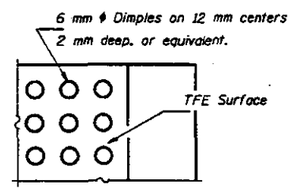

PLAN-TFE SURFACE

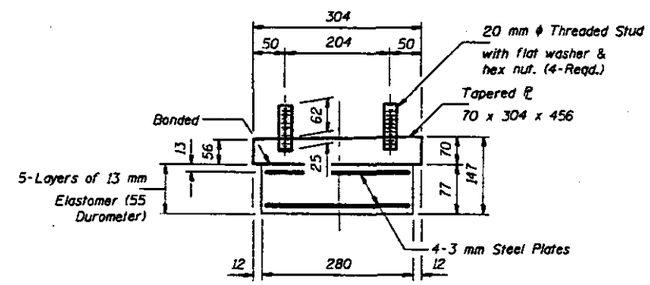

BEARING ASSEMBLY

Note: Shim plates shall not be placed under Bearing Assembly.

Notes: See sheet #123 of 123 for Anchor Bolt installation. All bearing plates except shim plates and side retainers shall be AASHTO M270M Grade 345.

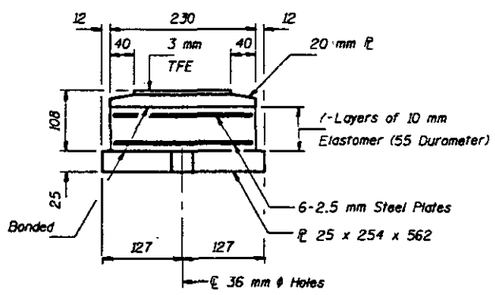

BOTTOM BEARING ASSEMBLY

Note: The 3 mm TFE sheet shall be bonded directly to the top steel plate with a two-component, medium viscosity epoxy resin, conforming to the requirements of the Federal Specification MMM-A-134, Type I. The bond agent shall be applied on the full area of the contact surfaces. Bonding of 3 mm TFE sheet during vulcanizing process will be permitted provided the process and method of adjusting assembly height is approved by the Engineer.

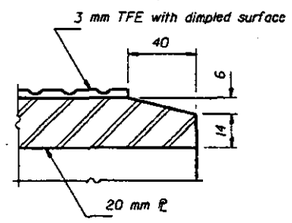

SECTION THRU TFE

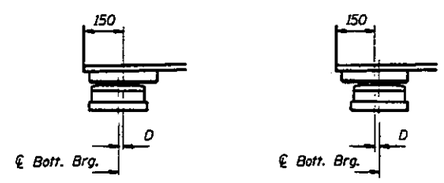

BELOW 10 °C (Move bott. brg. away from fixed brg.)

ABOVE 10 °C (Move bott. brg. toward fixed brg.)

SETTING ANCHOR BOLTS AT EXP. BRG.

D= 1 mm per each 10 m of expansion for every 8 °C temp. change from the normal temp. of 10 °C.

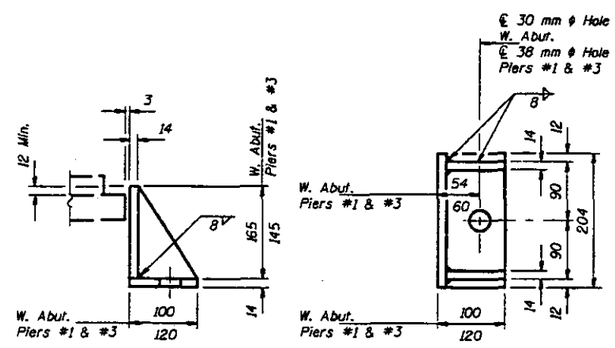

SIDE RETAINER

Equivalent rolled angle with stiffeners will be allowed in lieu of welded plates. Weight included with Structural Steel.

BILL OF MATERIAL

Item	Unit	Total
Elastomeric Bearing Assembly Type I	Each	12
Elastomeric Bearing Assembly Type II	Each	6

BEARING DETAILS
SPANS #1 THRU #4
F.A.P. RT. 315 SECTION 140B-1-4
FULTON AND MASON COUNTIES
STATION 10+646.69

DESIGNED	J.L.C.
CHECKED	T.T.B.
DRAWN	R. Doty
CHECKED	J.L.C. T.T.B.

June 26, 1997

EXAMINED [signature] ENGINEER OF BRIDGE DESIGN

PASSED [signature] ENGINEER OF BRIDGES AND STRUCTURES

I-2-E2 (M) 5-31-95

STATE OF ILLINOIS
DEPARTMENT OF TRANSPORTATION

STATE ROUTE NO.	SECTION	COUNTY	TOTAL SHEETS	SHEET NO.
F.A.P. 315	140B-1-4	FULTON & MASON		112

SHEET NO. 94
123 SHEETS

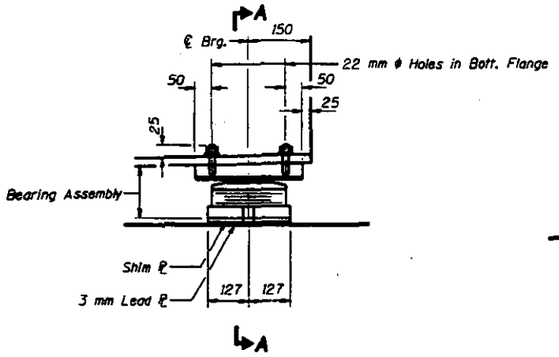

ELEVATION

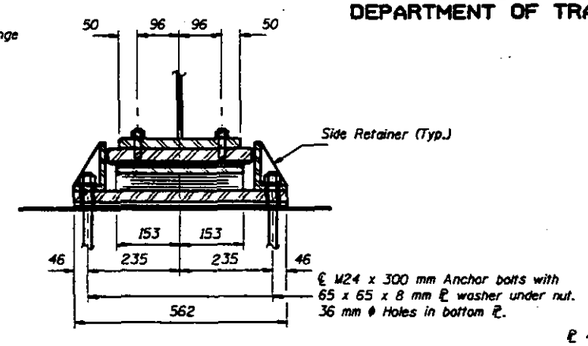

SECTION A-A

TYPE II TFE ELASTOMERIC EXP. BRG. AT PIER #4 (SPAN 4)

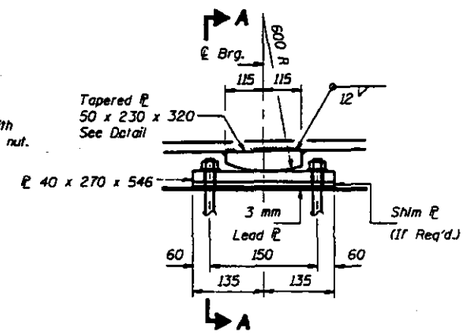

ELEVATION

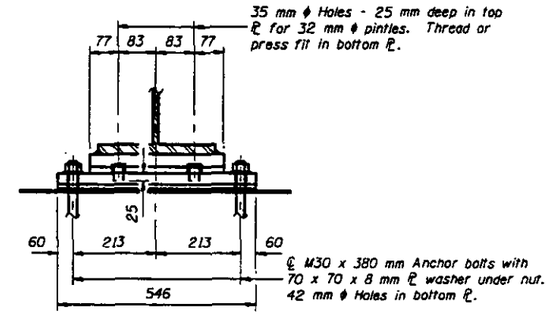

SECTION A-A

FIXED BEARING AT PIER #2
(6 Required)

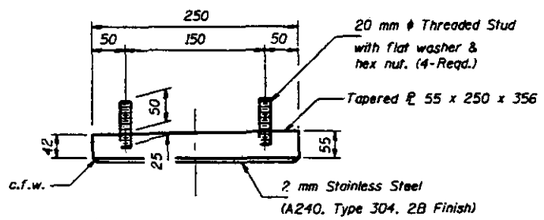

TOP BEARING ASSEMBLY

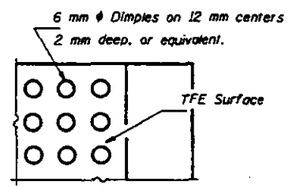

PLAN-TFE SURFACE

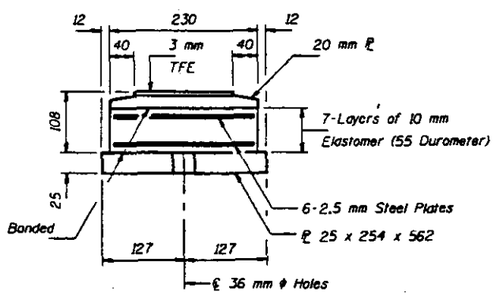

BOTTOM BEARING ASSEMBLY

Note: The 3 mm TFE sheet shall be bonded directly to the top steel plate with a two-component, medium viscosity epoxy resin, conforming to the requirements of the Federal Specification MMM-A-134, Type I. The bond agent shall be applied on the full area of the contact surfaces. Bonding of 3 mm TFE sheet during vulcanizing process will be permitted provided the process and method of adjusting assembly height is approved by the Engineer.

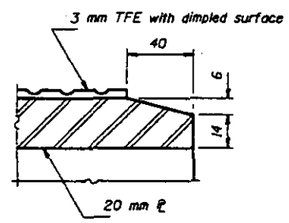

SECTION THRU TFE

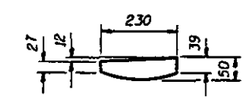

TAPERED PLATE DETAIL

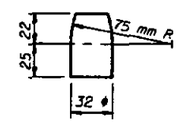

PINTLE

Notes: Anchor bolts at fixed bearings may be built into the masonry.
See sheet #123 of 123 for Anchor Bolt installation.
The pintles and all bearing plates except shim plates and side retainers shall be AASHTO M270M Grade 345.

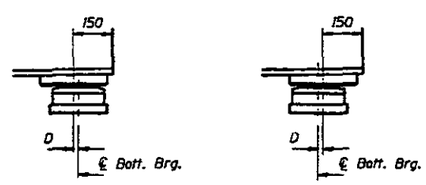

BELOW 10 °C
(Move bott. brg. away from fixed brg.)

ABOVE 10 °C
(Move bott. brg. toward fixed brg.)

SETTING ANCHOR BOLTS AT EXP. BRG.

D= 1 mm per each 10 m of expansion for every 8 °C temp. change from the normal temp. of 10 °C.

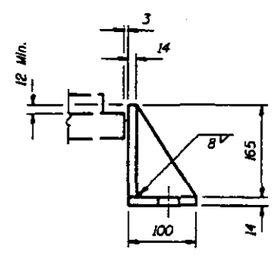

SIDE RETAINER

Equivalent rolled angle with stiffeners will be allowed in lieu of welded plates. Weight included with Structural Steel.

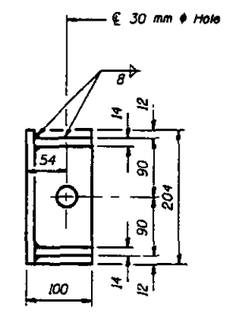

BILL OF MATERIAL

Item	Unit	Total
Elastomeric Bearing Assembly Type II	Each	6

BEARING DETAILS
SPANS #1 THRU #4
F.A.P. RT. 315 SECTION 140B-1-4
FULTON AND MASON COUNTIES
STATION 10+646.69

DESIGNED	JLC
CHECKED	TTBB
DRAWN	R. Doty
CHECKED	JLC TTBB

June 26, 1997

CHANGED Greg. O. Hagen
PASSED Robert E. Gudeman

STATE OF ILLINOIS
DEPARTMENT OF TRANSPORTATION

F.A.P. 315	140B-1-4	FULTON & MASON		113	SHEET NO. 95 / 123 SHEETS

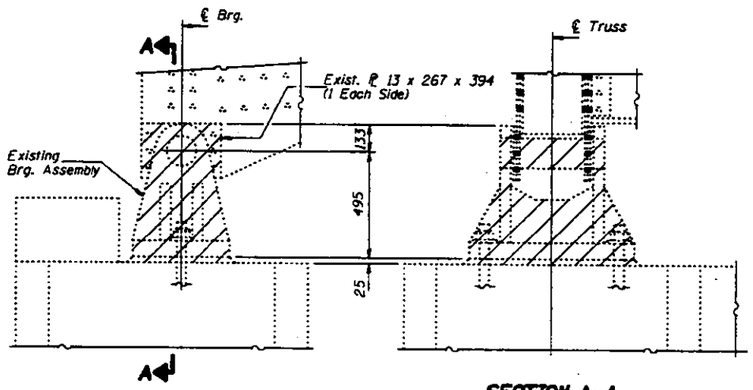

EXISTING ELEVATION AT PIER #4
(Looking North)

SECTION A-A

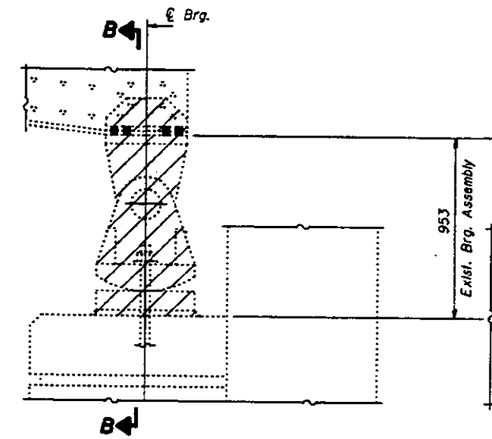

EXISTING ELEVATION AT EAST ABUTMENT
(Looking North)

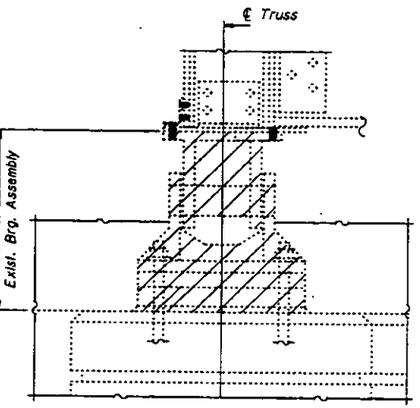

SECTION B-B

Notes: Hatched areas indicate the limits of existing removal. Cost included with the cost of "Jacking & Cribbing".
Dimensions from bottom edge of gusset plates or remaining top plate to the top of final bearing seat shall be verified and shim plates provided to achieve proper final positioning.
Cost of any additional shim plates, not in these plans shall be included with "Structural Steel".
For "Jacking and Cribbing" Details see sheet #103, #104 & #106 of 123.

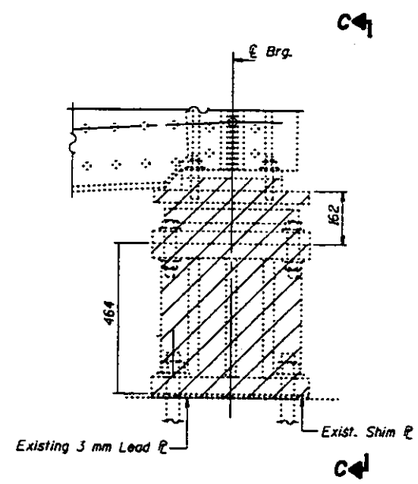

EXISTING ELEVATION AT PIER #5
SPAN 5
(Looking North)

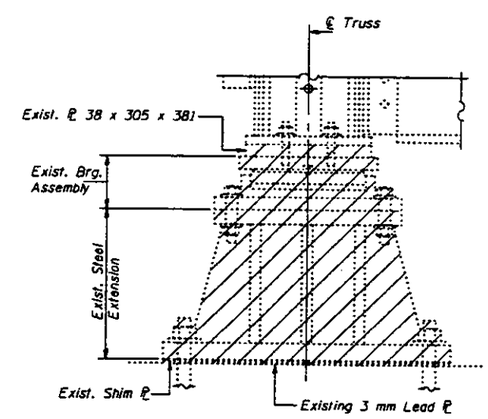

VIEW C-C

DESIGNED JLC	June 26, 1997
CHECKED TTBB	CHANGED
DRAWN John F. Schneller Jr.	PASSED LIAISON ENGINEER OF HIGHWAY DESIGN
CHECKED TTBB JLC TWM	ENGINEER OF BRIDGES AND STRUCTURES

BEARING REMOVAL
F.A.P. RT. 315 SEC. 140B-1-4
FULTON AND MASON COUNTIES
STA. 10+646.69

STATE OF ILLINOIS
DEPARTMENT OF TRANSPORTATION

F.A.P. 315	140B-I-4	FULTON & MASON		114	SHEET NO. 96 / 123 SHEETS

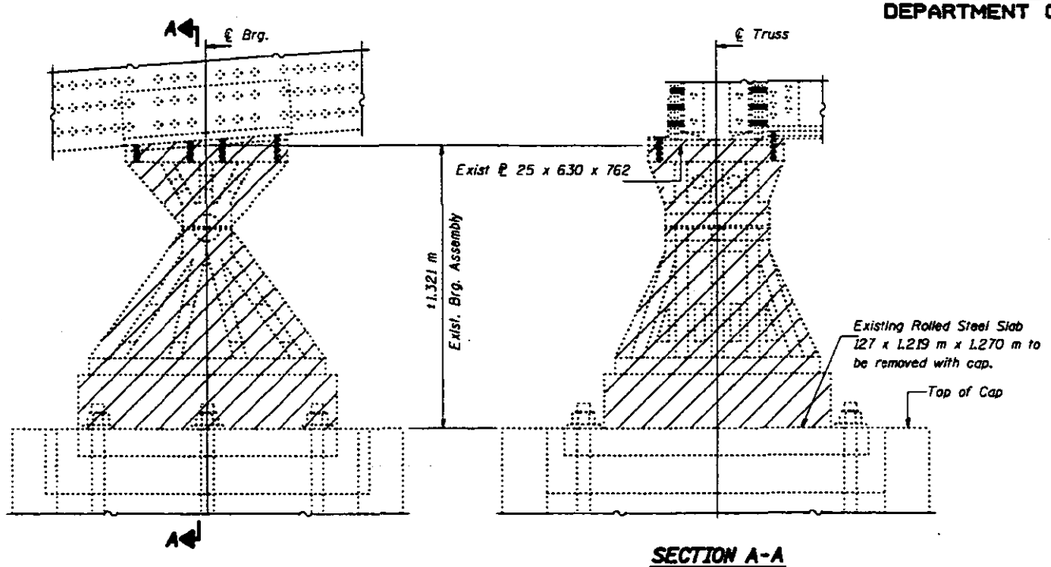

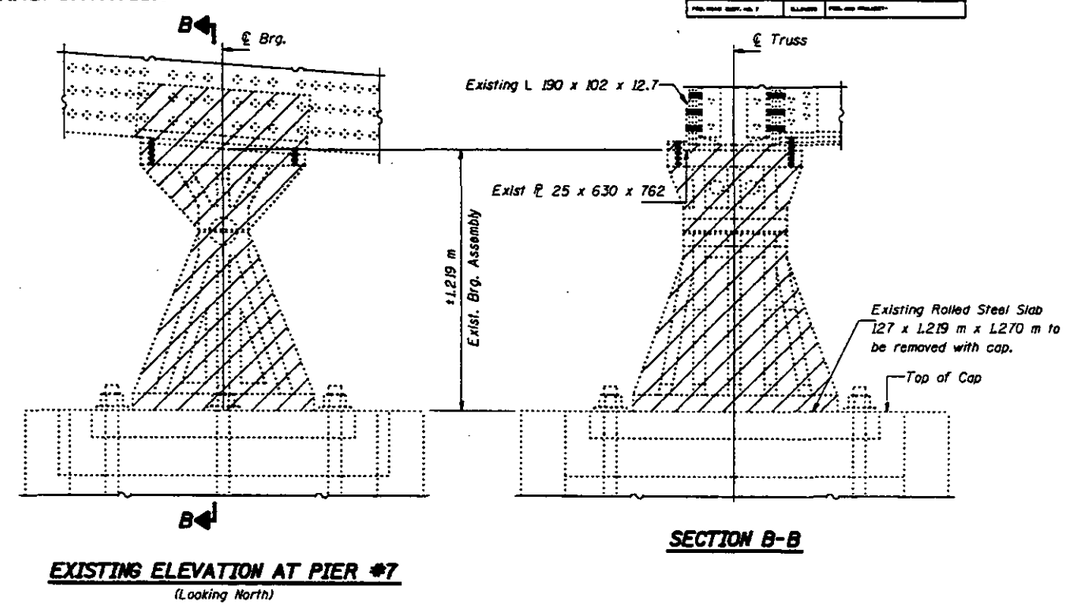

Notes: Hatched areas indicate the limit of existing removal. Cost included with the cost of "Jacking & Cribbing".

Dimensions from bottom edge of gusset plates or remaining top plate to the top of final bearing seat shall be verified and shim plates provided to achieve proper final positioning.

Cost of any additional shim plates, not in these plans shall be included with "Structural Steel".

For "Jacking and Cribbing" Details see sheet #104, #105 & #106 of 123.

Cost of removing existing rolled steel slab is included with the cost of "Concrete Removal". For quantities see sheets #111 & #112 of 123.

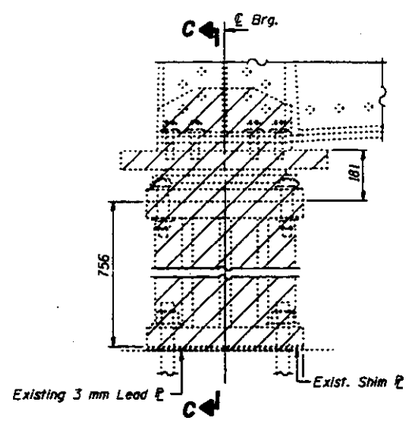

EXISTING ELEVATION AT PIER #5
SPAN 6
(Looking North)

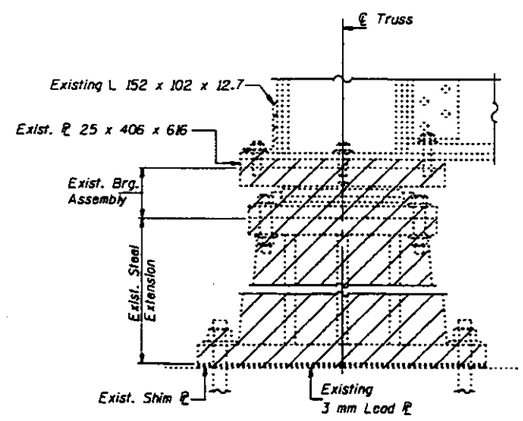

SECTION C-C

DESIGNED JLC	June 26, 1997
CHECKED TTbb	DRAWING
DRAWN John F. Schneller Jr.	PASSED ENGINEER OF BRIDGE DESIGN
CHECKED TTbb JLC TWM	ENGINEER OF BRIDGES AND STRUCTURES

BEARING REMOVAL
F.A.P. RT. 315 SEC. 140B-I-4
FULTON AND MASON COUNTIES
STA. 10+646.69

STATE OF ILLINOIS
DEPARTMENT OF TRANSPORTATION

F.A.P. NO.	SECTION	COUNTY		
F.A.P. 315	140B-I-4	FULTON & MASON		

SHEET NO. 97
123 SHEETS

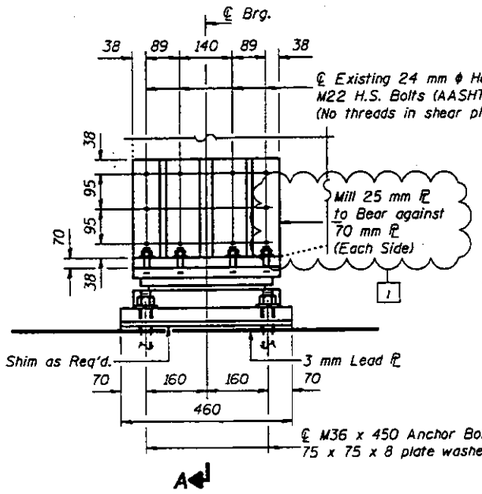

ELEVATION AT PIER #4 - SPAN 5
(Looking North)

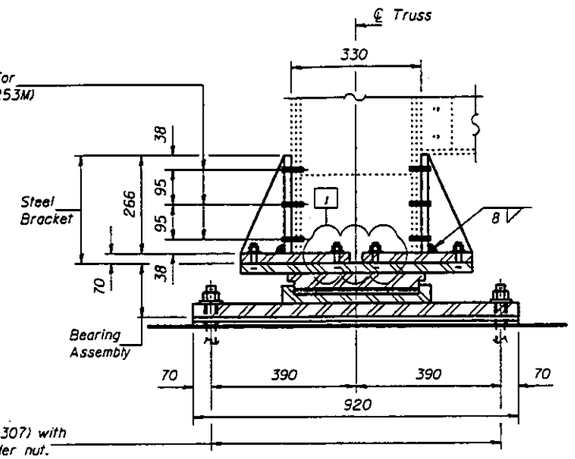

SECTION A-A

Panel Point Lo (Span 5)

FIXED FLOATING BEARING
(2 Required)

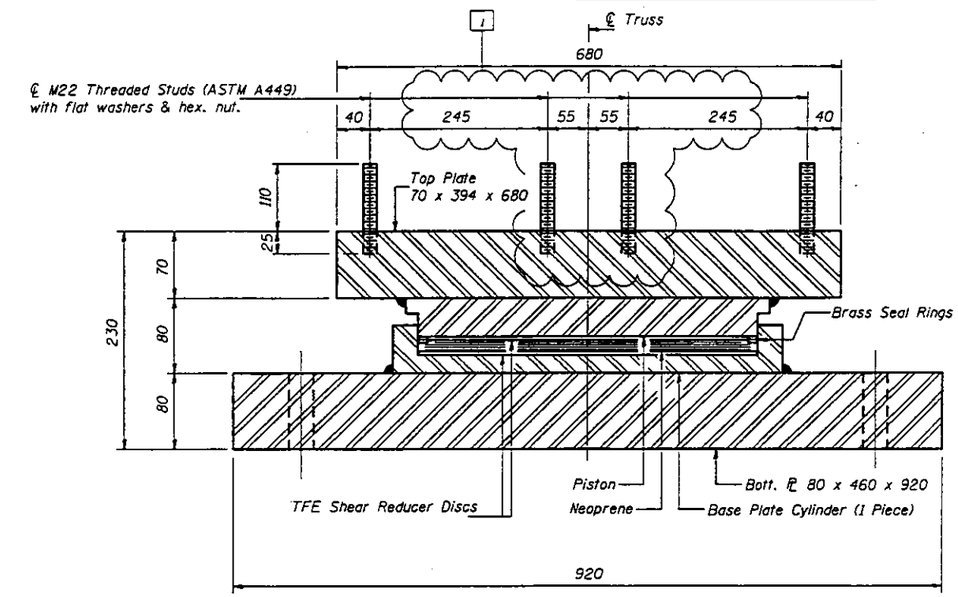

BEARING ASSEMBLY

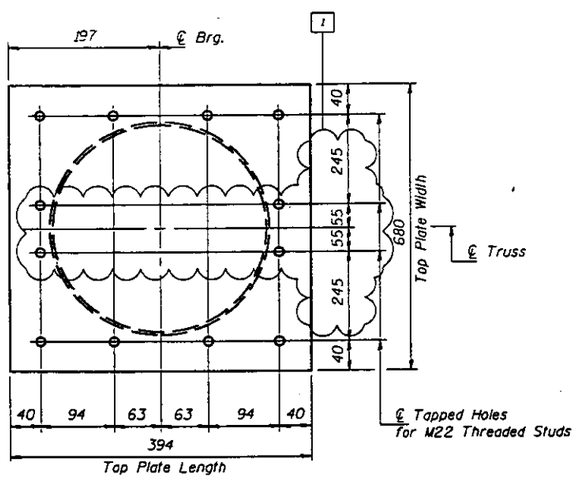

TOP BRG. ℙ PLAN

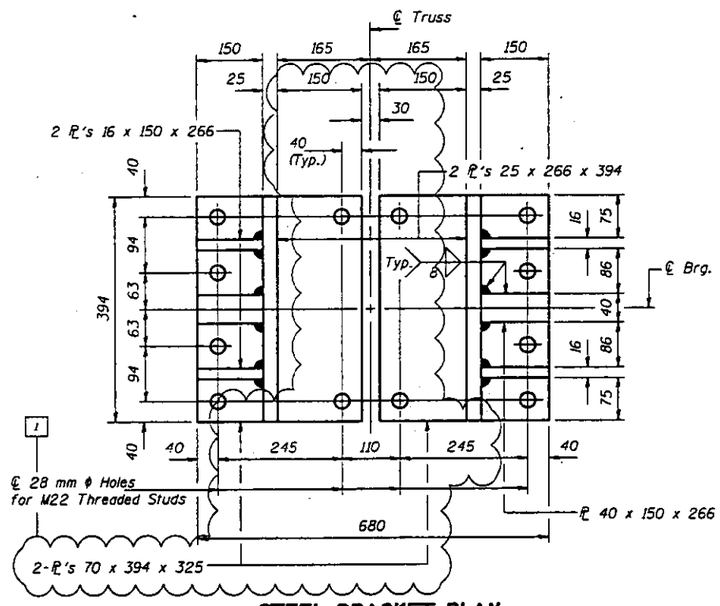

STEEL BRACKET PLAN

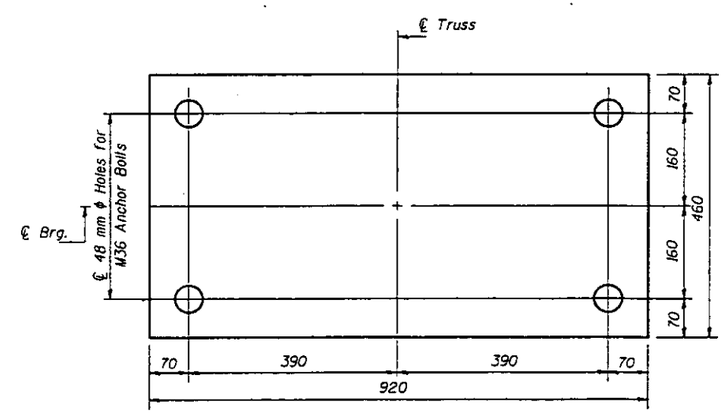

BOTTOM BRG. ℙ PLAN

Notes: All plates of the Bearing Assembly and Steel Bracket shall be AASHTO M270M, Grade 345.
For anchor bolt installation details see sheet #123 of 123.
Provide 2-3 x 460 x 920 adjusting shims per bearing.
Quantity included with "Furnishing & Erecting Structural Steel."
Anchor Bolts may be built into the masonry.
Base plate thickness was determined by using a pot diameter of 368 mm.

BEARING DATA		
R_{TOTAL}	(kN)	1441
Lateral Load	(kN)	373

BILL OF MATERIAL

Item	Unit	Total
Floating Bearings, Fixed 1750 kN	Each	2

DESIGNED	
CHECKED	
DRAWN	R. Doty
CHECKED	

June 26, 1997
EXAMINED Jaj. O. Hooper ENGINEER OF BRIDGE DESIGN
PASSED Ralph E. Anderson ENGINEER OF BRIDGES AND STRUCTURES

BEARING DETAILS - PIER #4 (SPAN 5)
F.A.P. RT. 315 SECTION 140B-I-4
FULTON AND MASON COUNTIES
STATION 10+646.69

1 Revised 11-26-97 STD

c:\projects\rad00012\0630002a.dgn Dec. 04, 1997 14:30:28

STATE OF ILLINOIS
DEPARTMENT OF TRANSPORTATION

F.A.P. 315	140B-I-4	FULTON & MASON		116	SHEET NO. 98 / 123 SHEETS

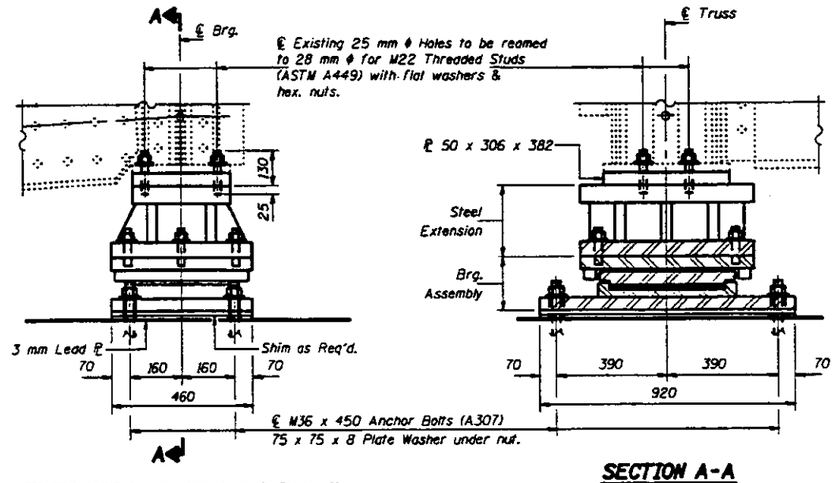

ELEVATION AT PIER 5 (SPAN 5)
(Looking North)

SECTION A-A

EXPANSION FLOATING BEARING
(2 Required)

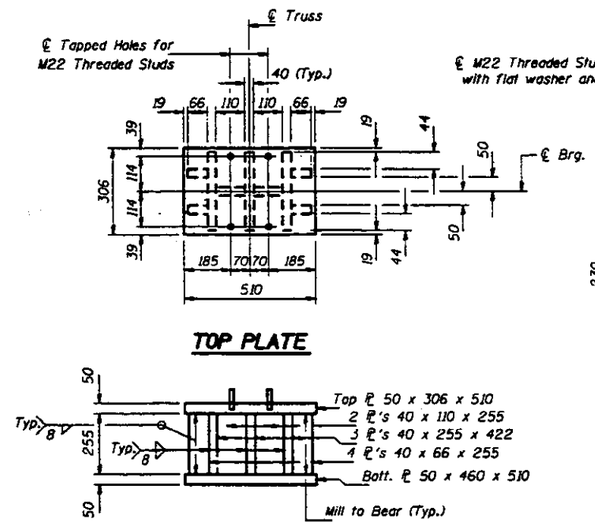

TOP PLATE

ELEVATION

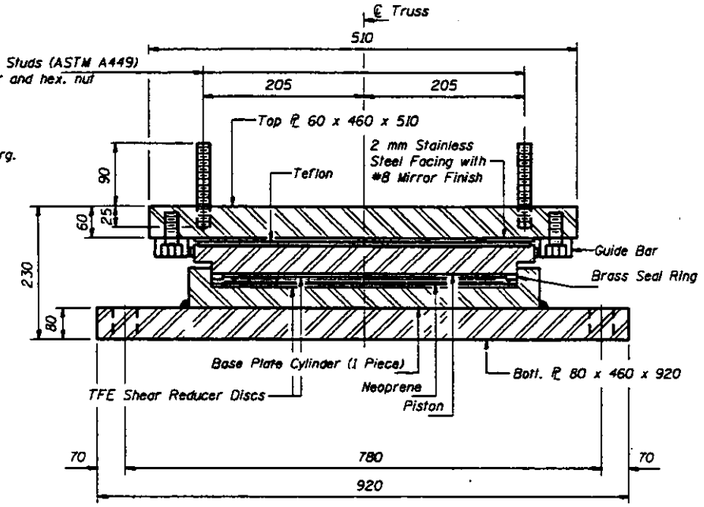

BEARING ASSEMBLY

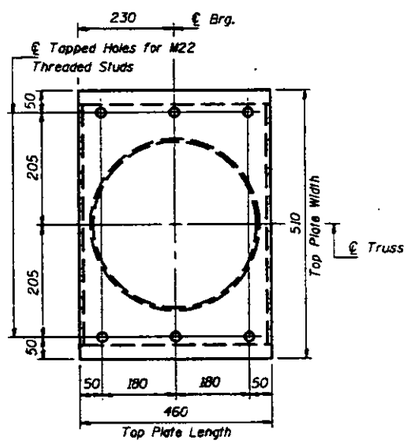

TOP BRG. PL PLAN

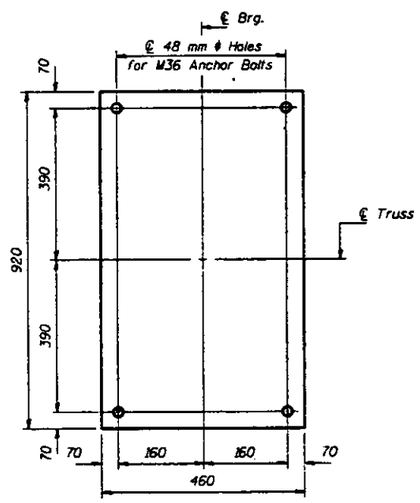

BOTT. BRG. PL PLAN

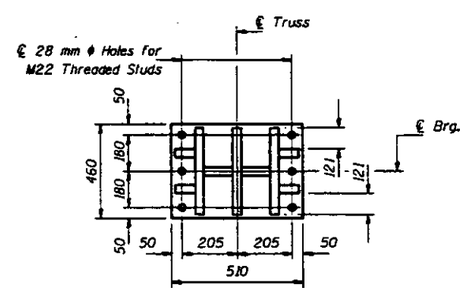

BOTTOM PLATE
STEEL EXTENSION

BEARING DATA	
R_{TOTAL} (kN)	1441
Lateral Load (kN)	186
Expansion Length	73.2 m

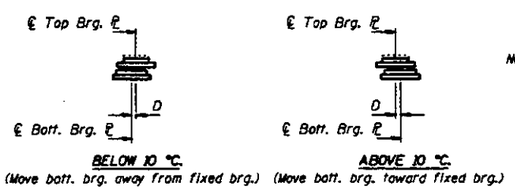

BELOW 10 °C. (Move bott. brg. away from fixed brg.)
ABOVE 10 °C. (Move bott. brg. toward fixed brg.)

SETTING ANCHOR BOLTS AT EXP. BRG.
D=1 mm per each 10 m of expansion for every 8 °C temp. change from the normal temp. of 10 °C.

Notes: All plates of the Bearing Assembly and Steel Extension shall be AASHTO M270M, Grade 345.
For anchor bolt installation details see sheet #123 of 123.
Provide 2-3 x 460 x 920 adjusting shims per bearing. Quantity included with "Furnishing and Erecting Structural Steel."
Cost of reaming existing holes is included with "Furnishing & Erecting Structural Steel."
Base plate thickness was determined by using a pot diameter of 368 mm.

BILL OF MATERIAL

Item	Unit	Total
Floating Bearings, Guided Expansion 1/50 kN	Each	2

DESIGNED	JLC
CHECKED	TWM
DRAWN	R. Doty
CHECKED	JLC TWM

June 26, 1997
EXAMINED — LIAISON OF BRIDGE DESIGN
PASSED — CHIEF OF BRIDGE AND STRUCTURE

BEARING DETAILS - PIER #5 (SPAN 5)
F.A.P. RT. 315 SECTION 140B-I-4
FULTON AND MASON COUNTIES
STATION 10+646.69

STATE OF ILLINOIS
DEPARTMENT OF TRANSPORTATION

F.A.P. 315	MQB-I-4	FULTON & MASON		117	SHEET NO. 99 / 123 SHEETS

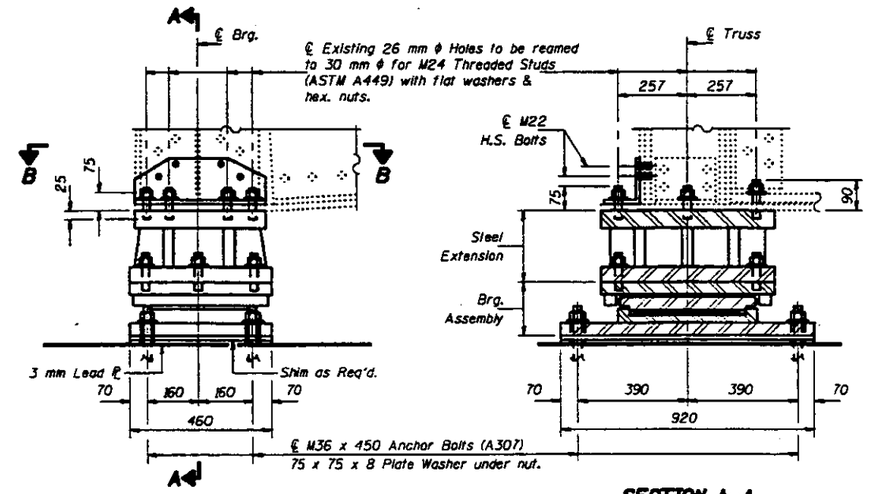

ELEVATION AT PIER 5 (SPAN 6)
(Looking North)

Panel Point Lo

SECTION A-A

EXPANSION FLOATING BEARING
(2 Required)

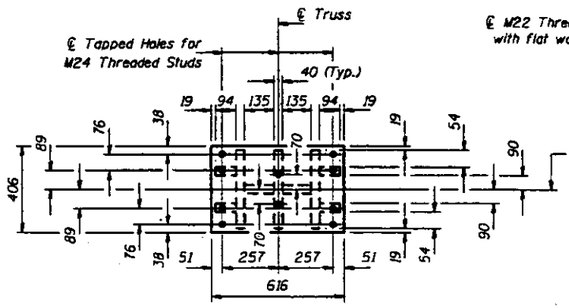

TOP PLATE

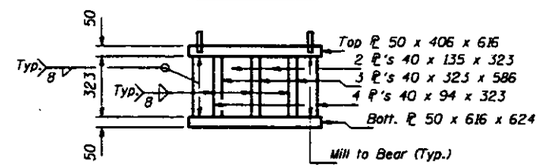

ELEVATION

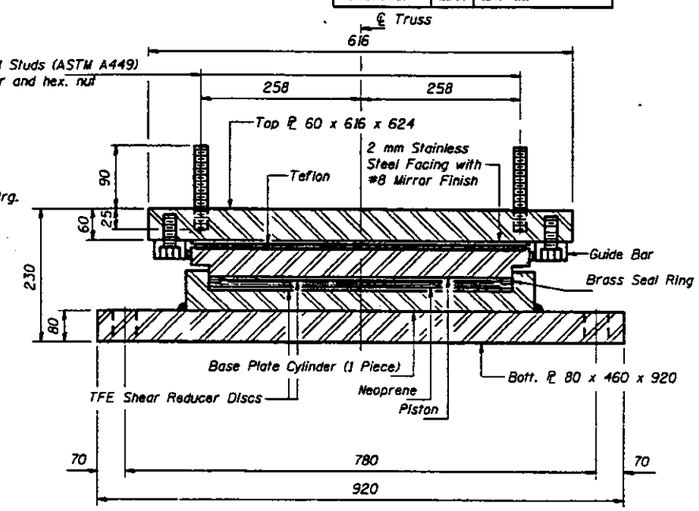

BEARING ASSEMBLY

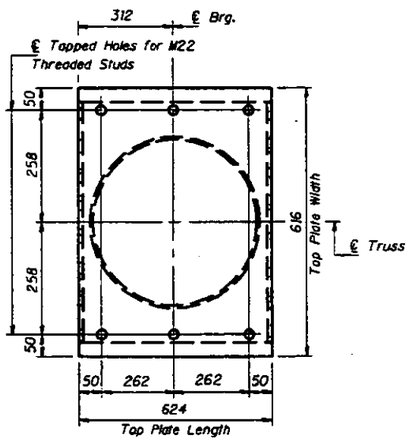

TOP BRG. ℙ PLAN

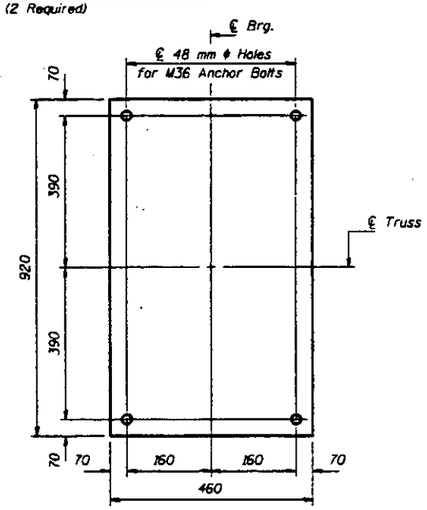

BOTT. BRG. ℙ PLAN

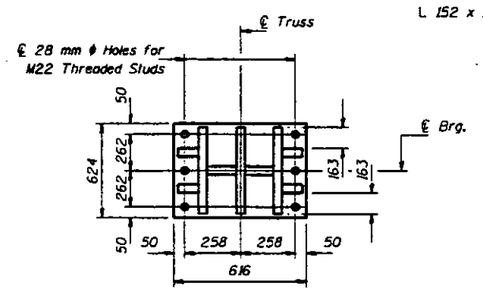

BOTTOM PLATE
STEEL EXTENSION

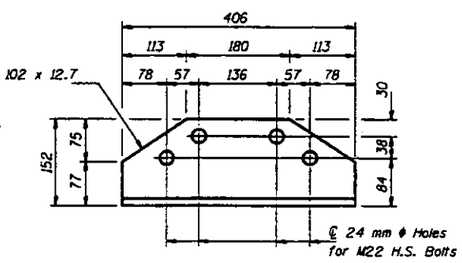

VIEW C-C

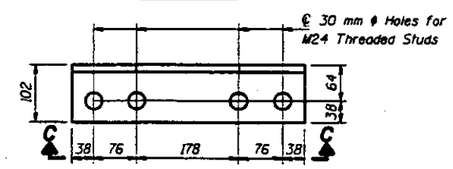

VIEW B-B

BEARING DATA	
R_{TOTAL} (kN)	1795
Lateral Load (kN)	229
Expansion Length	237.7 m

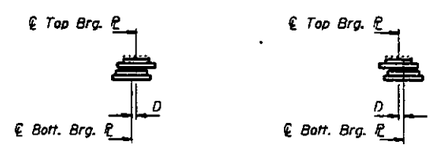

BELOW 10 °C. (Move bott. brg. away from fixed brg.)
ABOVE 10 °C. (Move bott. brg. toward fixed brg.)

SETTING ANCHOR BOLTS AT EXP. BRG.
D=1 mm per each 10 m of expansion for every 8 °C temp. change from the normal temp. of 10 °C.

Notes: All plates of the Bearing Assembly and Steel Extension shall be AASHTO M270M, Grade 345.
For anchor bolt installation details see sheet #123 of 123.
Provide 2-3 x 460 x 920 adjusting shims per bearing. Quantity included with "Furnishing and Erecting Structural Steel."
Cost of reaming existing holes is included with "Furnishing & Erecting Structural Steel."
Base plate thickness was determined by using a pot diameter of 394 mm.

BILL OF MATERIAL

Item	Unit	Total
Floating Bearings, Guided Expansion 2000 kN	Each	2

DESIGNED	JLC
CHECKED	TWM
DRAWN	R. Daty
CHECKED	JLC TWM

June 26, 1997
DAMIEN J. GRAVER, LICENSED STRUCTURAL DESIGNER
PASSED Robert E. Anderson, ENGINEER OF BRIDGES AND STRUCTURES

BEARING DETAILS - PIER #5 (SPAN 6)
F.A.P. RT. 315 SECTION 140B-I-4
FULTON AND MASON COUNTIES
STATION 10+646.69

STATE OF ILLINOIS
DEPARTMENT OF TRANSPORTATION

F.A.P. 315	MOB-I-4	FULTON & MASON		118	SHEET NO. 100 / 123 SHEETS

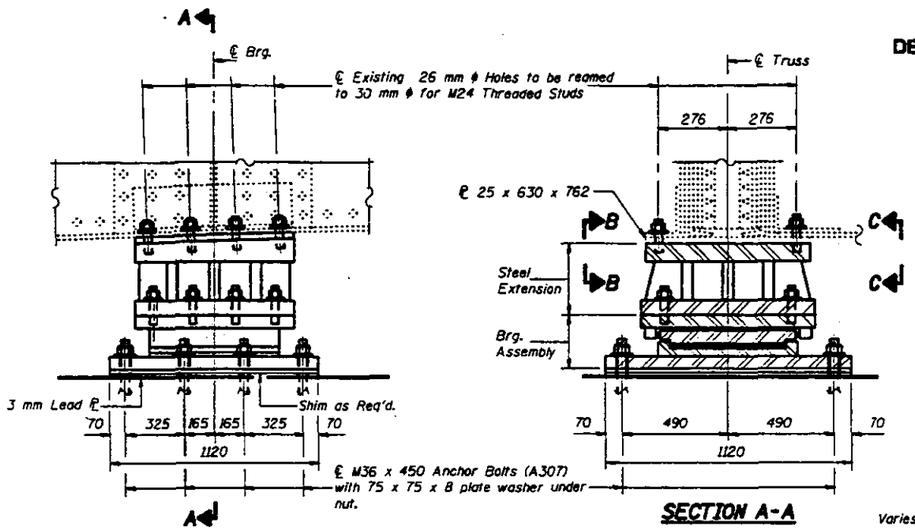

ELEVATION AT PIER #6
(Looking North)

SECTION A-A

EXPANSION FLOATING BEARING
(2 Required)

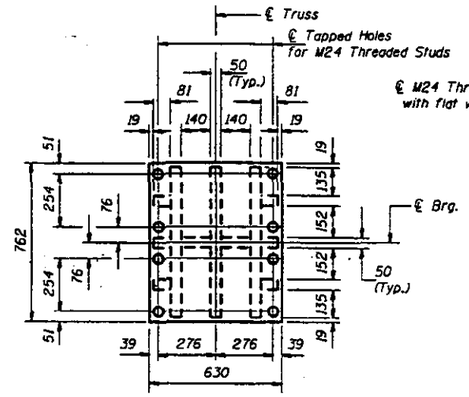

TOP PLATE

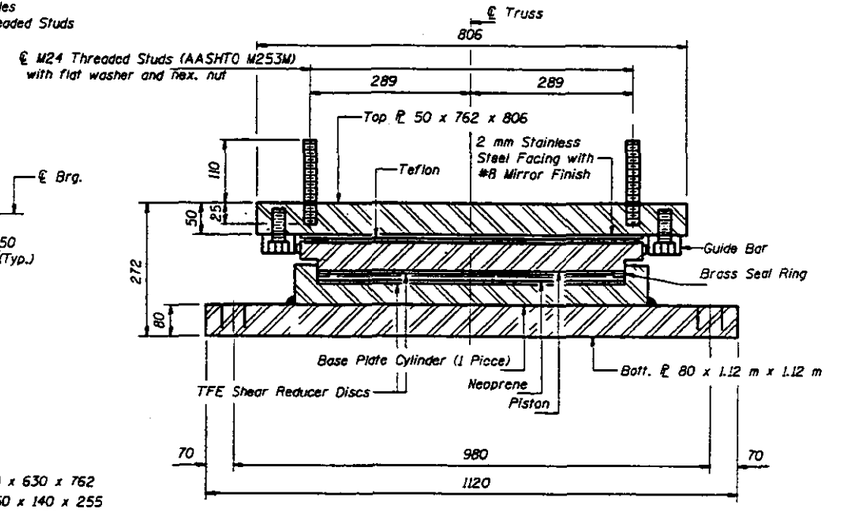

BEARING ASSEMBLY

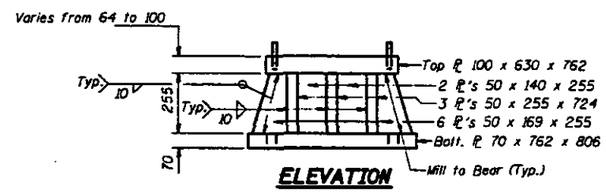

ELEVATION

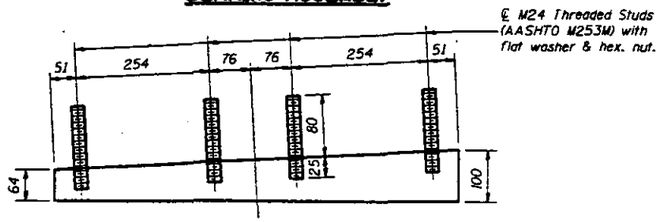

VIEW B-B

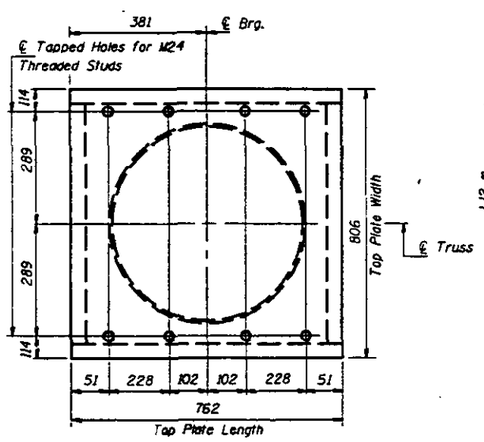

TOP BRG. ℙ PLAN

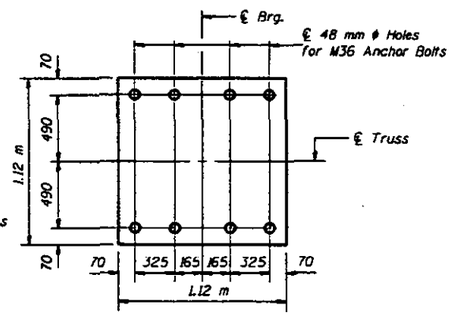

BOTT. BRG. ℙ PLAN

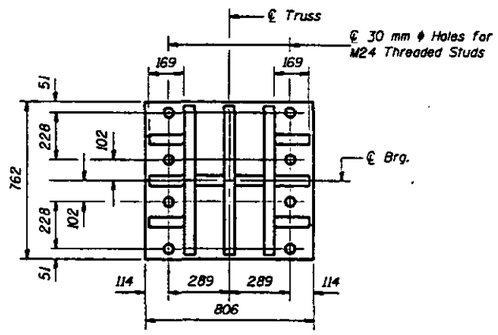

BOTTOM PLATE

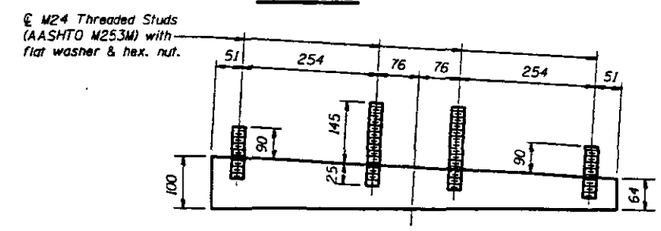

VIEW C-C

STEEL EXTENSION

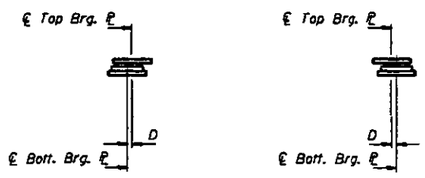

BELOW 10 °C.
(Move bott. brg. away from fixed brg.)

ABOVE 10 °C.
(Move bott. brg. toward fixed brg.)

SETTING ANCHOR BOLTS AT EXP. BRG.
D=1 mm per each 10 m of expansion for every 8 °C temp. change from the normal temp. of 10 °C.

Notes: All plates of the Bearing Assembly and Steel Extension shall be AASHTO M270M, Grade 345.
For anchor bolt installation details see sheet #123 of 123.
Provide 2-3 x 1120 x 1120 adjusting shims per bearing. Quantity included with "Furnishing and Erecting Structural Steel."
Cost of reaming existing holes is included with "Furnishing & Erecting Structural Steel."
Base plate thickness was determined by using a pot diameter of 667 mm.

BEARING DATA	
R TOTAL (kN)	5638
Lateral Load (kN)	807
Expansion Length	128.0 m

BILL OF MATERIAL

Item	Unit	Total
Floating Bearings, Guided Expansion 6000 kN	Each	2

DESIGNED	JLC
CHECKED	TWM
DRAWN	R. Daty
CHECKED	JLC TWM

June 26, 1997
EXAMINED Engineer of Bridge Design
PASSED Engineer of Bridges and Structures

BEARING DETAILS - PIER #6
F.A.P. RT. 315 SECTION 140B-I-4
FULTON AND MASON COUNTIES
STATION 10+646.69

STATE OF ILLINOIS
DEPARTMENT OF TRANSPORTATION

BEARING DATA		
R TOTAL	(kN)	5638
Lateral Load	(kN)	2073

F.A.P. 315	140B-I-4	FULTON & MASON		119

SHEET NO. 101
123 SHEETS

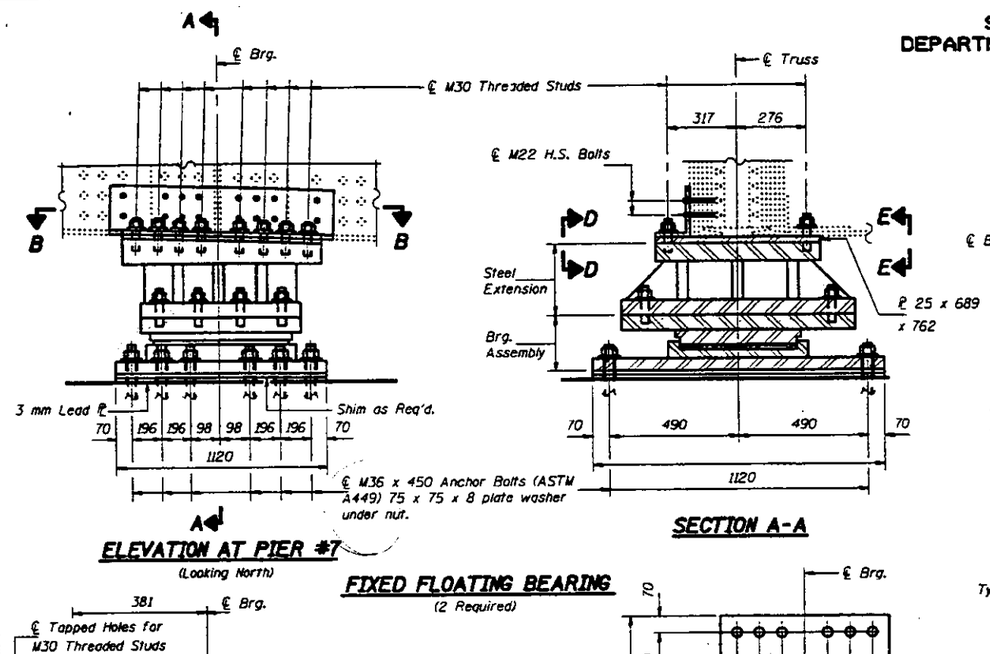

ELEVATION AT PIER #7
(Looking North)

SECTION A-A

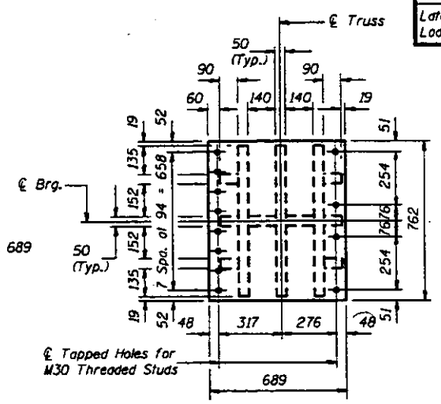

TOP PLATE

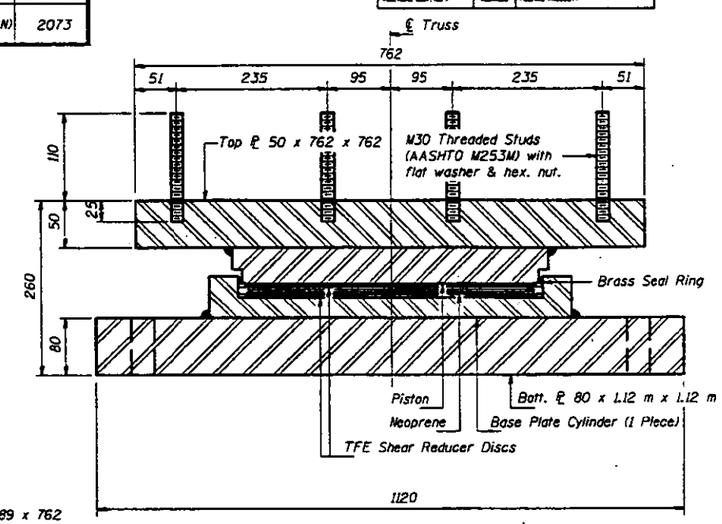

BEARING ASSEMBLY

FIXED FLOATING BEARING
(2 Required)

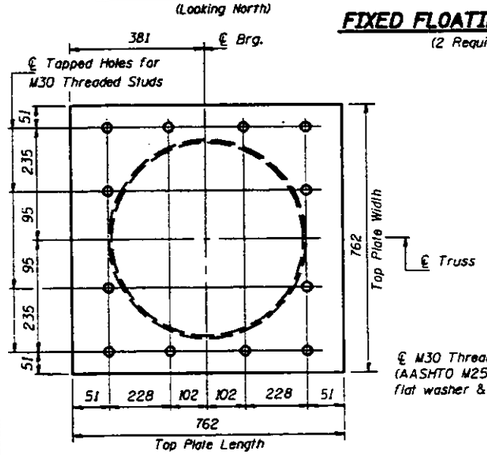

TOP BRG. ℙ PLAN

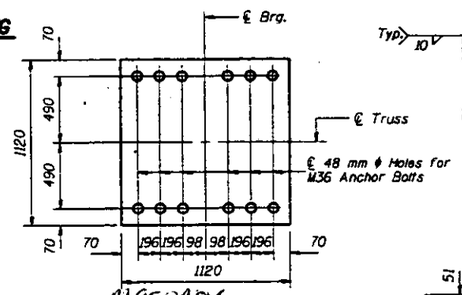

BOTT. BRG. ℙ PLAN

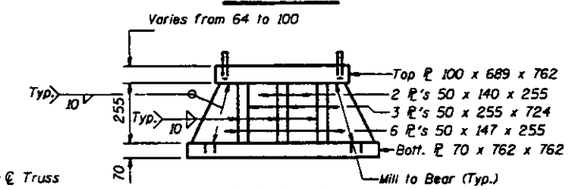

ELEVATION

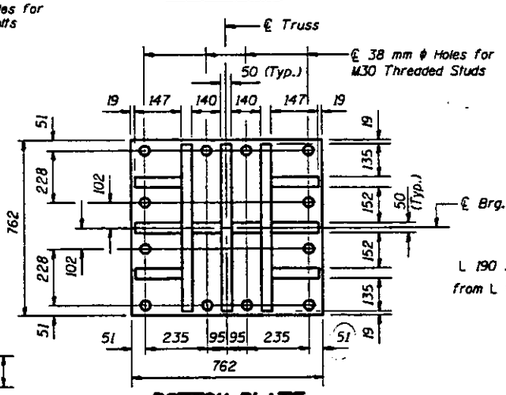

BOTTOM PLATE

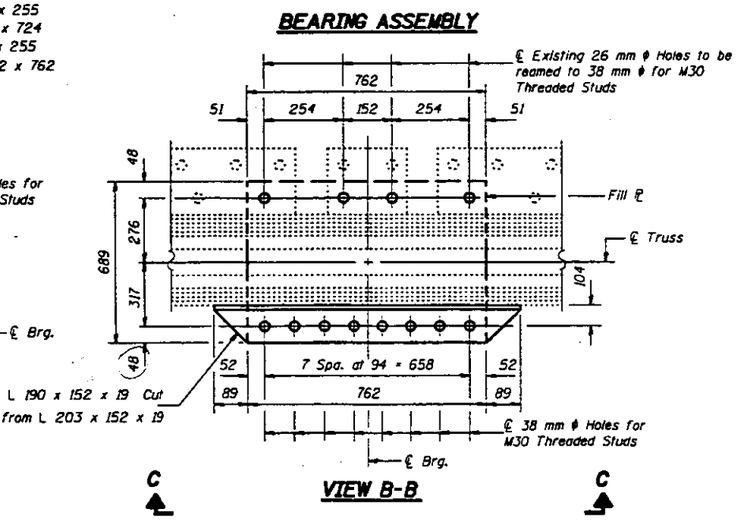

VIEW B-B

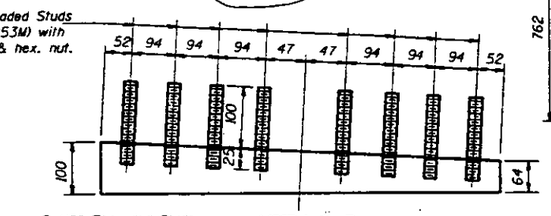

VIEW D-D

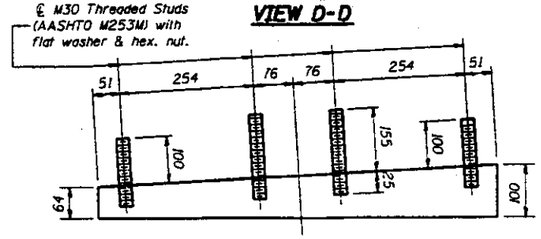

VIEW E-E

STEEL EXTENSION

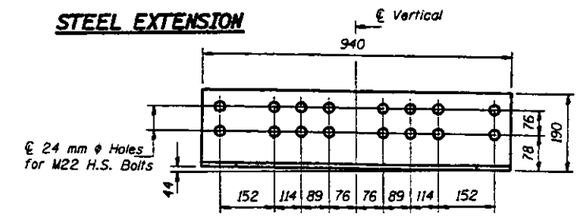

VIEW C-C

BILL OF MATERIAL

Item	Unit	Total
Floating Bearings, Fixed 6000 kN	Each	2

Notes:
All plates of the Bearing Assembly and Steel Extension shall be AASHTO M270M, Grade 345.
For anchor bolt installation details see sheet #123 of 123.
Provide 2-3 x 1120 x 1120 adjusting shims per bearing. Quantity included with "Furnishing & Erecting Structural Steel."
Cost of reaming existing holes is included with "Furnishing & Erecting Structural Steel".
Anchor Bolts may be built into the masonry.
Base plate thickness was determined by using a pot diameter of 667 mm.

DESIGNED	JLC
CHECKED	TWM
DRAWN	R. Doty
CHECKED	JLC TWM

June 26, 1997
EXAMINED Engineer of Bridge Design
PASSED Engineer of Bridges and Structures

BEARING DETAILS - PIER #7
F.A.P. RT. 315 SECTION 140B-I-4
FULTON AND MASON COUNTIES
STATION 10+646.69

STATE OF ILLINOIS
DEPARTMENT OF TRANSPORTATION

F.A.P. 315	140B-I-4	FULTON & MASON		120

SHEET NO. 102
123 SHEETS

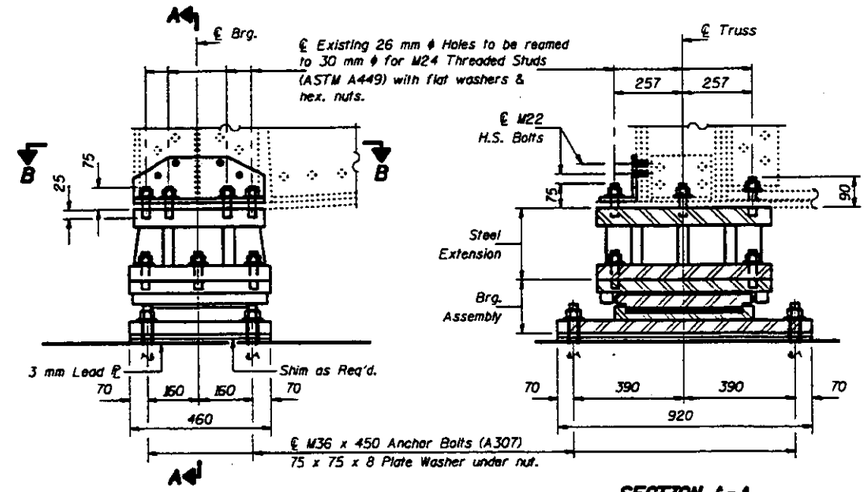

ELEVATION AT EAST ABUT.
(Looking South)

SECTION A-A

EXPANSION FLOATING BEARING
(2 Required)

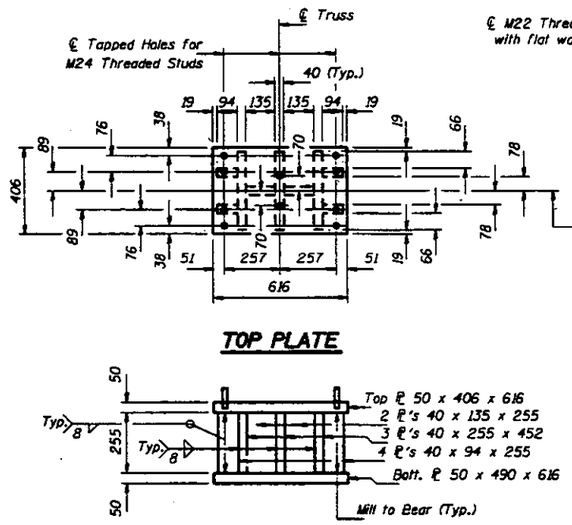

TOP PLATE

ELEVATION

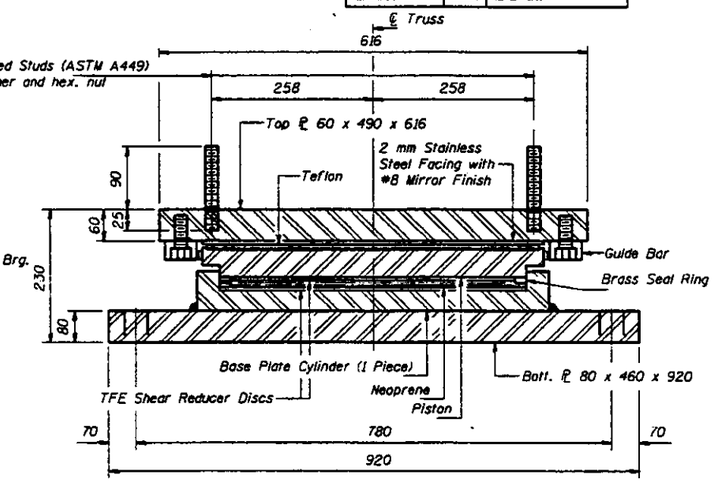

BEARING ASSEMBLY

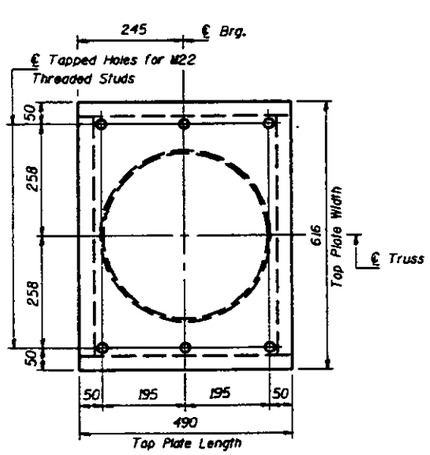

TOP BRG. ℙ PLAN

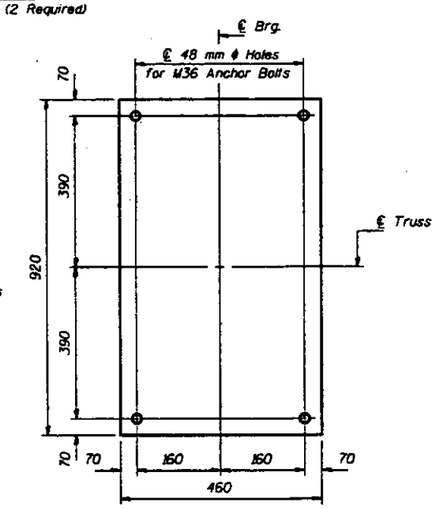

BOTT. BRG. ℙ PLAN

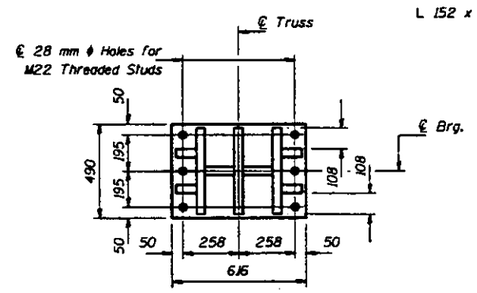

BOTTOM PLATE
STEEL EXTENSION

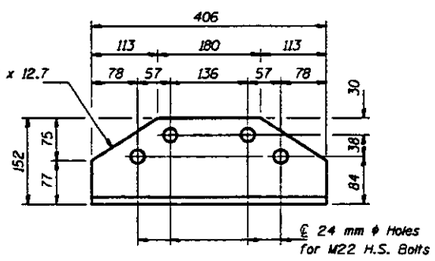

VIEW C-C

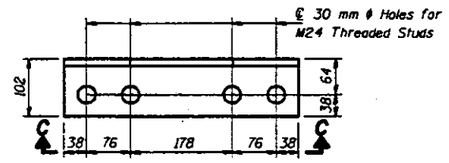

VIEW B-B

BEARING DATA		
R TOTAL	(kN)	1795
Lateral Load	(kN)	229
Expansion Length		109.7 m

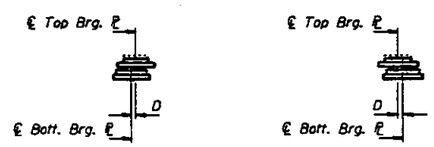

BELOW 10 °C.
(Move batt. brg. away from fixed brg.)

ABOVE 10 °C.
(Move batt. brg. toward fixed brg.)

SETTING ANCHOR BOLTS AT EXP. BRG.

D=1 mm per each 10 m of expansion for every 8 °C temp. change from the normal temp. of 10 °C.

Notes: All plates of the Bearing Assembly and Steel Extension shall be AASHTO M270M, Grade 345.

For anchor bolt installation details see sheet #123 of 123.

Provide 2-3 x 460 x 920 adjusting shims per bearing. Quantity included with "Furnishing and Erecting Structural Steel."

Cost of reaming existing holes is included with "Furnishing & Erecting Structural Steel."

Base Plate thickness was determined using a pot diameter of 394 mm.

BILL OF MATERIAL

Item	Unit	Total
Floating Bearings, Guided Expansion 2000 kN	Each	2

DESIGNED	JLC
CHECKED	TWM
DRAWN	R. Doty
CHECKED	JLC TWM

June 26, 1997

CHARGED Craig D. Hooper — ENGINEER OF BRIDGE DESIGN
PASSED Ralph E. Anderson — ENGINEER OF BRIDGES AND STRUCTURES

BEARING DETAILS - EAST ABUTMENT
F.A.P. RT. 315 SECTION 140B-I-4
FULTON AND MASON COUNTIES
STATION 10+646.69

STATE OF ILLINOIS
DEPARTMENT OF TRANSPORTATION

F.A.P. 315	140B-1-4	FULTON & MASON		121	SHEET NO. 103 / 123 SHEETS

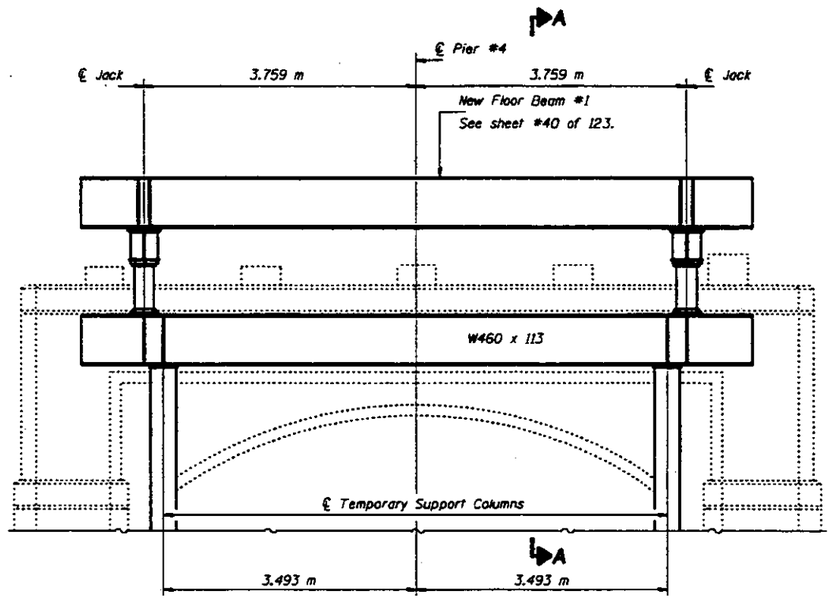

ELEVATION AT PIER #4
(Looking East)

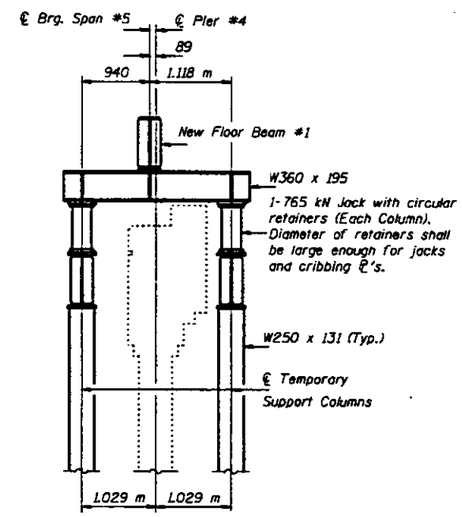

SECTION A-A

HORIZONTAL & VERTICAL LOADS AT EACH BEARING

DL Steel	493 kN
Wind Load Vertical	+190 kN -190 kN
Wind Load Transverse	159 kN
Wind Load Longitudinal	212 kN

NOTES:

1. Existing superstructure from spans 1, 2, 3, & 4 and existing concrete deck from span 5 shall be removed before beginning jacking and cribbing.
2. Existing floor beams 1, 2, & 3 and the existing stringers between them shall be removed and replaced before jacking the truss.
3. The temporary support system, jacks, and cribbing is conceptually shown for bidding purposes only, additional members not shown may be required. A complete design, signed and sealed by a Illinois Licensed Structural Engineer shall be submitted to the Department by the Contractor for approval.
4. The temporary support system, jacks, and cribbing shall be designed to transfer the vertical and horizontal loads shown in the table to the pier.
5. The members selected for the temporary support system, jacks, and cribbing shall provide adequate clearance to perform the work on the pier.
6. Piers 4 and 7 may be worked on simultaneously as laid out in the sequence of construction.
7. The truss shall be raised a maximum of 3 mm. All jacks shall be raised and lowered simultaneously.
8. Concrete steps for approach shall be poured after removal of temporary support system.

BILL OF MATERIAL

Item	Unit	Total
Temporary Support System	Each	1
Jacking & Cribbing	Each	2

DESIGNED JLC	June 26, 1997
CHECKED LSH	EXAMINED Greg. O. Kasper, ENGINEER OF GENERAL DESIGN
DRAWN John F. Schneller Jr.	PASSED Ralph E. Anderson, ENGINEER OF BRIDGES AND STRUCTURES
CHECKED JLC	

TEMPORARY SUPPORT SYSTEM AT PIER #4
F.A.P. RT. 315 SEC. 140B-1-4
FULTON AND MASON COUNTIES
STA. 10+646.69

STATE OF ILLINOIS
DEPARTMENT OF TRANSPORTATION

F.A.P. 315	MOB 1-4	FULTON & MASON		122

SHEET NO. 104
123 SHEETS

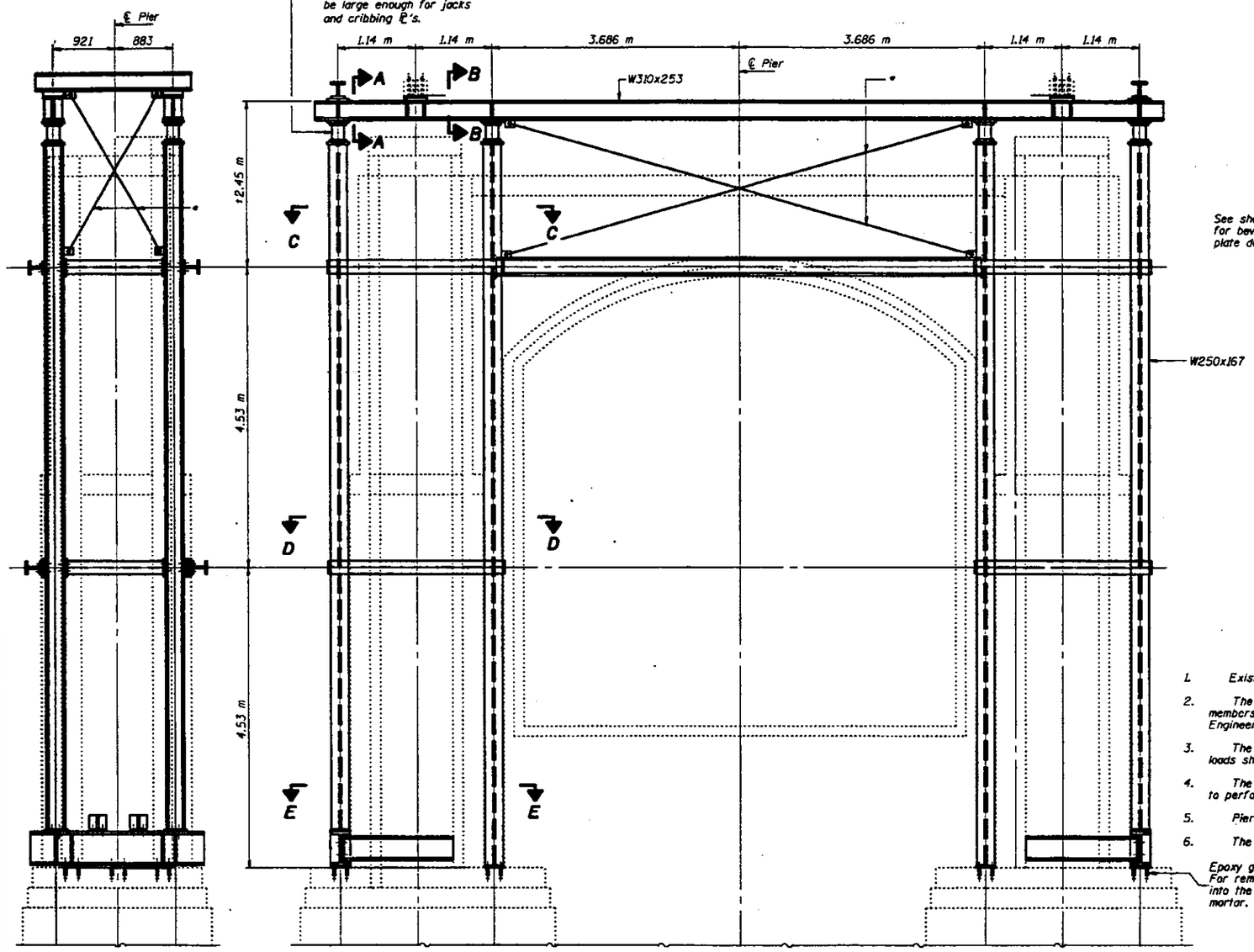

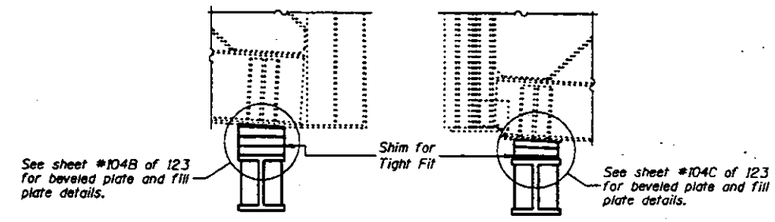

SECTION A-A

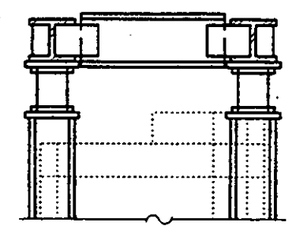

SECTION B-B

NOTES

1. Existing concrete deck from Spans 5, 6, 7 and 8 shall be removed before beginning jacking and cribbing.
2. The temporary support system, jacks and cribbing is conceptually shown for bidding purposes only. Additional members not shown may be required. A complete design, signed and sealed by an Illinois Licensed Structural Engineer shall be submitted to the Department by the Contractor for approval.
3. The temporary support system, jacks and cribbing shall be designed to transfer the vertical and horizontal loads shown in the table to the pier. Cribbing must provide for thermal effects from respective spans.
4. The members selected for the temporary support system, jacks and cribbing shall provide adequate clearance to perform the work on the pier.
5. Pier 5 and the East Abutment may be worked on simultaneously as laid out in the sequence of construction.
6. The truss shall be raised a maximum of 3 mm. All jacks shall be raised and lowered simultaneously.

Epoxy grouted galvanized threaded rods For removal burn or chip rods 40 mm into the concrete and patch with epoxy mortar. (Typ.)

END VIEW

ELEVATION - PIER #5

(Looking East)

* Diagonal braces shall be installed with a loose fit and then fully tightened after jacks are raised and cribbed.

DESIGNED	JLC
CHECKED	LSH
DRAWN	R. Doty
CHECKED	JLC

June 26, 1997

ENGINEER OF STRUCTURE DESIGN

ENGINEER OF BRIDGES AND STRUCTURES

Note: For Sections C-C, D-D and E-E see sheet #104A of 123.

TEMPORARY SUPPORT SYSTEM
AT PIER #5
F.A.P. RT. 315 SEC. 140B-I-4
FULTON AND MASON COUNTIES
STA. 10+646.69

STATE OF ILLINOIS
DEPARTMENT OF TRANSPORTATION

F.A.P. 315	1408-1-4	FULTON & MASON		123

SHEET NO. 104A
123 SHEETS

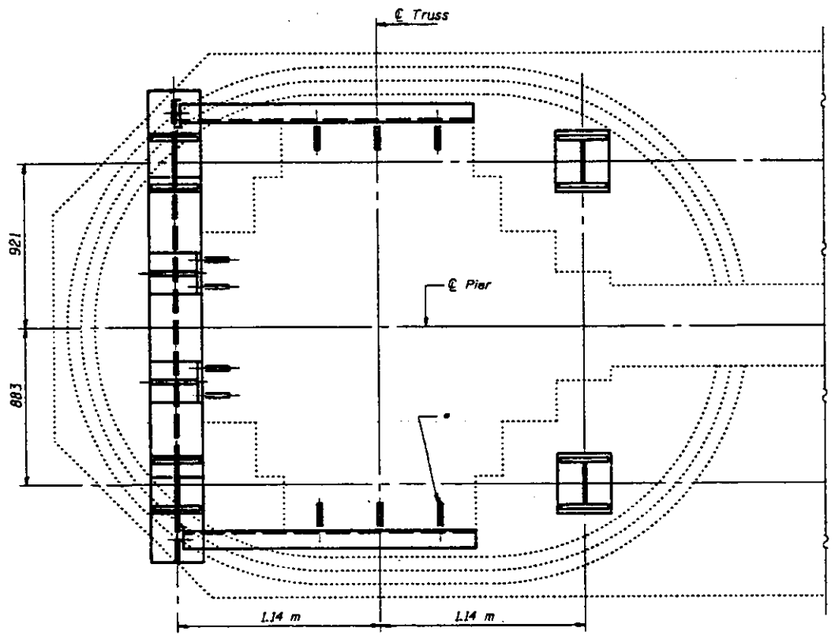

SECTION E-E

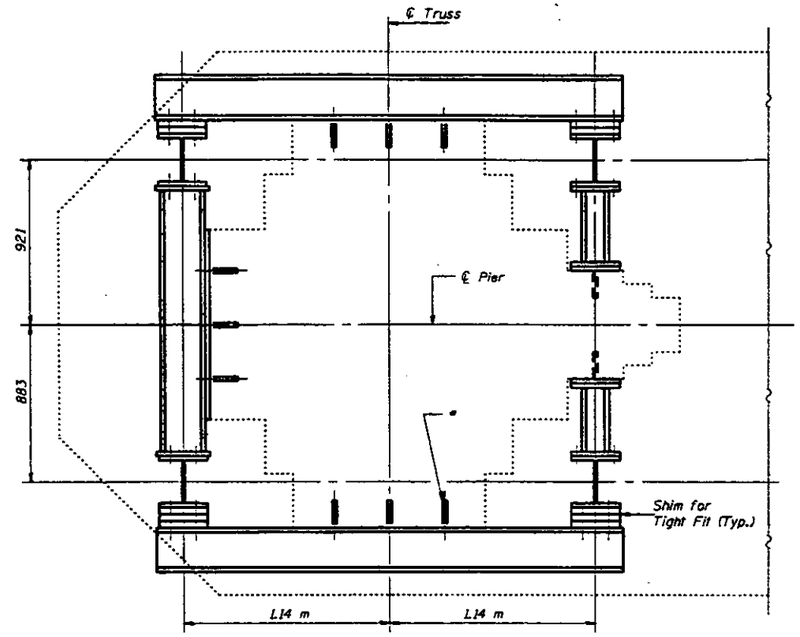

SECTION D-D

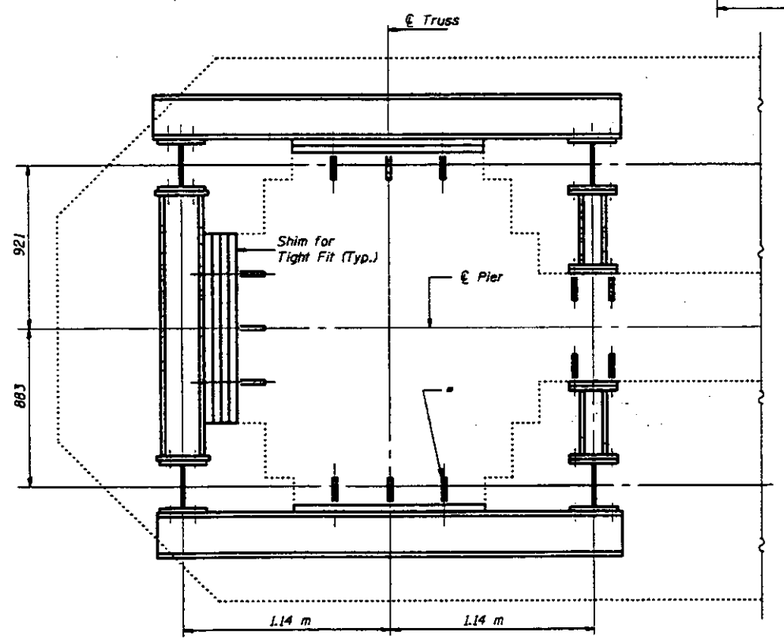

SECTION C-C

HORIZONTAL & VERTICAL LOADS AT EACH BEARING

	Span 5	Span 6
DL Steel	493kN	610kN
Wind Load Vertical	+190kN -190kN	+323kN -323kN
Wind Load Transverse	159kN	270kN

* Epoxy grouted galvanized threaded rods For removal burn or chip rods 40 mm into the concrete and patch with epoxy mortar. (Typ.)

DESIGNED	JLC
CHECKED	LSH
DRAWN	R. Doty
CHECKED	JLC

June 26, 1997

ENGINEER OF BRIDGE DESIGN

ENGINEER OF BRIDGES AND STRUCTURES

TEMPORARY SUPPORT SYSTEM AT PIER #5
F.A.P. RT. 315 SEC. 1408-1-4
FULTON AND MASON COUNTIES
STA. 10+646.69

STATE OF ILLINOIS
DEPARTMENT OF TRANSPORTATION

F.A.P. 315	140B-1-4	FULTON & MASON		124	SHEET NO. 104B 123 SHEETS

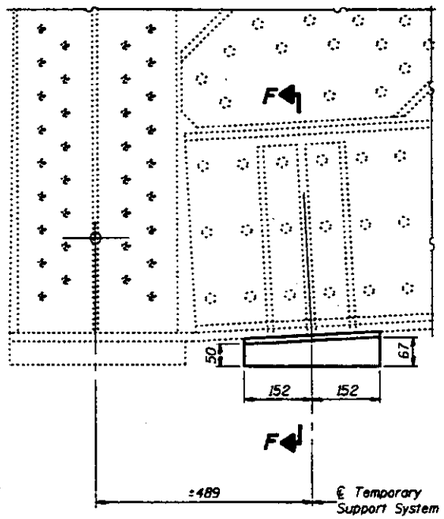

ELEVATION EXISTING SPAN 6 BRG.

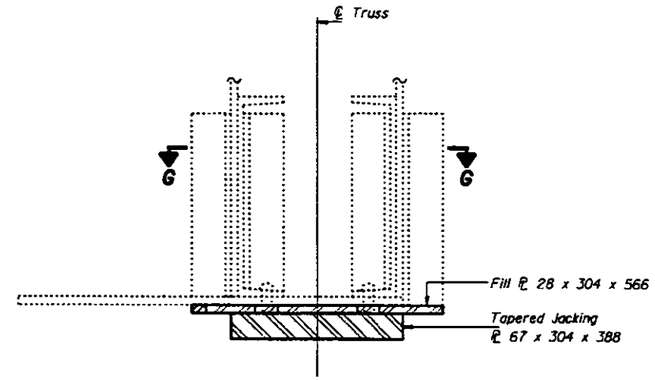

SECTION F-F

Note: Cost of fill plates and tapered plates is included with "Jacking and Cribbing."

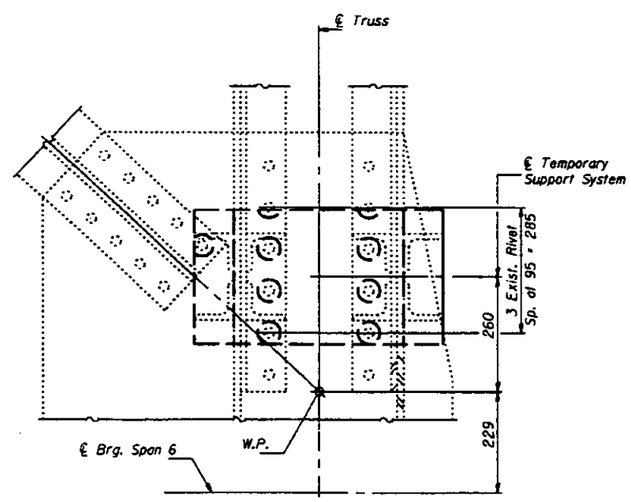

SECTION G-G

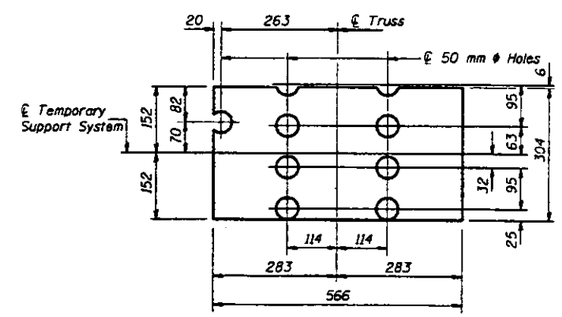

FILL ℙ 28 x 304 x 566

DESIGNED	JLC
CHECKED	LSH
DRAWN	R. Doty
CHECKED	JLC

June 26, 1997

EXAMINED Raj. D. Kapur — ENGINEER OF BRIDGE DESIGN

PASSED Robert E. Cullum — ENGINEER OF BRIDGES AND STRUCTURES

TEMPORARY SUPPORT SYSTEM
AT PIER #5
F.A.P. RT. 315 SEC. 140B-1-4
FULTON AND MASON COUNTIES
STA. 10+646.69

STATE OF ILLINOIS
DEPARTMENT OF TRANSPORTATION

F.A.P. 315	140B-1-4	FULTON & MASON		125	SHEET NO. 104C 123 SHEETS

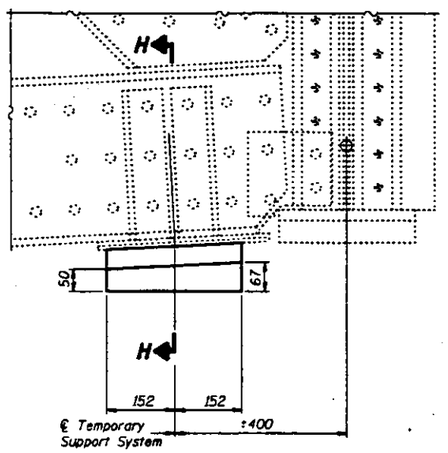

ELEVATION EXISTING SPAN 5 BRG.

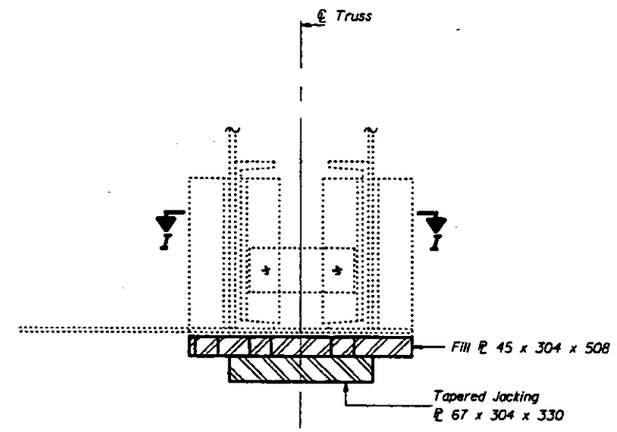

SECTION H-H

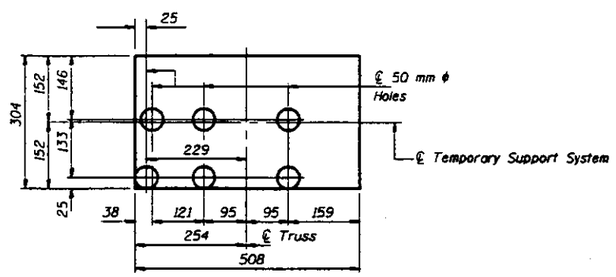

FILL PLATE 45 x 304 x 508

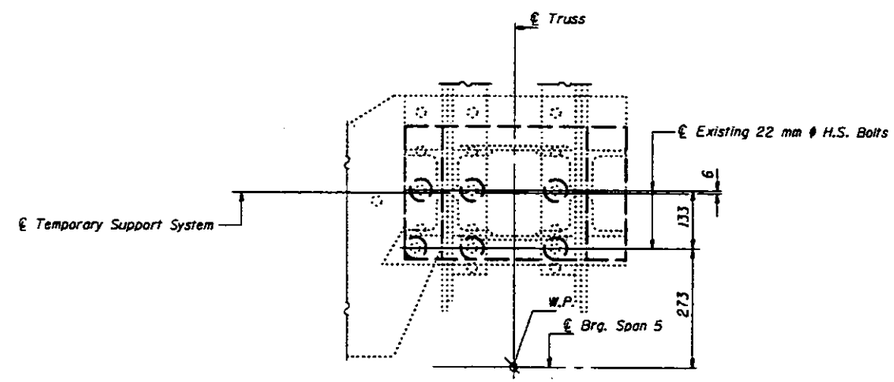

SECTION I-I

BILL OF MATERIAL

Item	Unit	Total
Temporary Support System	Each	1
Jacking and Cribbing	Each	4

DESIGNED	JLC
CHECKED	LSH
DRAWN	R. Doty
CHECKED	JLC

June 26, 1997

DESIGNED [signature] ENGINEER OF BRIDGE DESIGN

PASSED [signature] ENGINEER OF BRIDGES AND STRUCTURES

Note: Cost of fill plates and tapered plates is included with "Jacking and Cribbing."

TEMPORARY SUPPORT SYSTEM
AT PIER #5
F.A.P. RT. 315 SEC. 140B-1-4
FULTON AND MASON COUNTIES
STA. 10+646.69

STATE OF ILLINOIS
DEPARTMENT OF TRANSPORTATION

F.A.P. 315	140B-1-4	FULTON & MASON		126

SHEET NO. 105
123 SHEETS

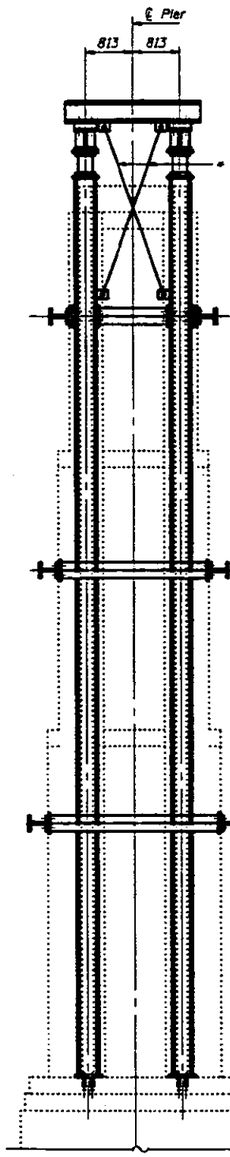

END VIEW

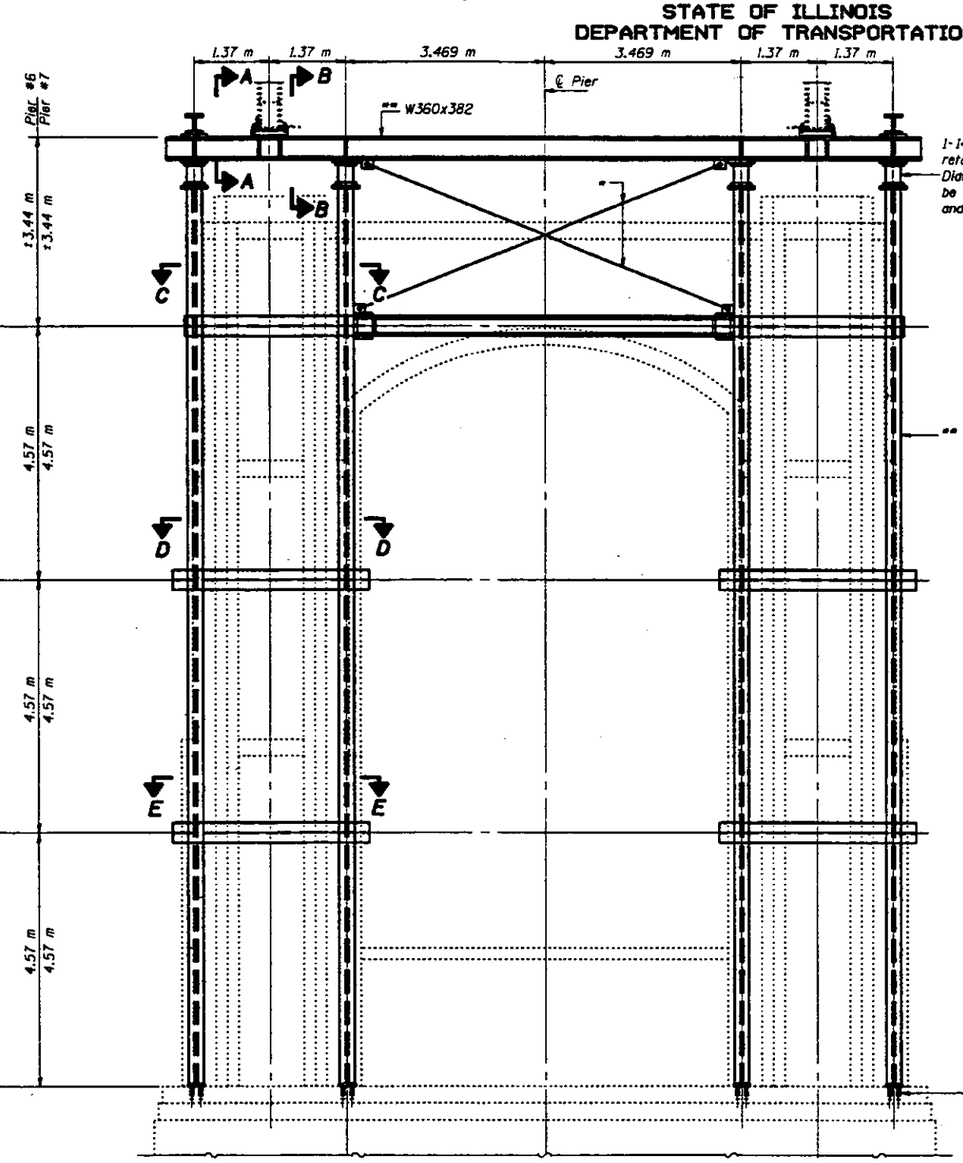

ELEVATION - PIERS #6 AND #7

** AASHTO M270M Grade 345.

* Diagonal braces shall be installed with a loose fit and then fully tightened after jacks are raised and cribbed.

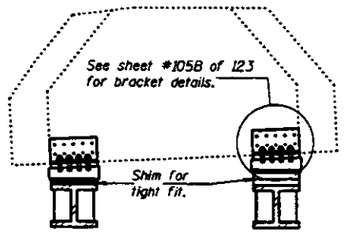

SECTION A-A

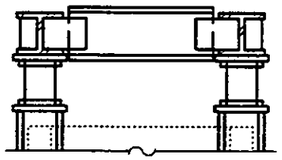

SECTION B-B

NOTES

1. Existing concrete deck from Spans 6, 7 and 8 shall be removed before beginning jacking and cribbing.
2. Jacking plates shall be installed before jacking the truss.
3. The temporary support system, jacks and cribbing are conceptually shown for bidding purposes only. Additional members not shown may be required. A complete design, signed and sealed by an Illinois Licensed Structural Engineer shall be submitted to the Department by the Contractor for approval.
4. The temporary support system, jacks and cribbing shall be designed to transfer the vertical and horizontal loads shown in the table to the pier. Cribbing must provide for thermal effects from respective spans at Pier 6 only.
5. The members selected for the temporary support system, jacks and cribbing shall provide adequate clearance to perform the work on the pier.
6. Piers 4 and 7 may be worked on simultaneously and Pier 6 shall follow as laid out in the sequence of construction.
7. The truss shall be raised a maximum of 3 mm. All jacks shall be raised and lowered simultaneously.

DESIGNED	JLC
CHECKED	LSH
DRAWN	R. Daty
CHECKED	JLC

June 26, 1997

Note: For Sections C-C, D-D and E-E see sheet #105A of 123.

TEMPORARY SUPPORT SYSTEM
AT PIERS #6 AND #7
F.A.P. RT. 315 SEC. 140B-1-4
FULTON AND MASON COUNTIES
STA. 10+646.69

STATE OF ILLINOIS
DEPARTMENT OF TRANSPORTATION

F.A.P. 315	MOB-1-4	FULTON & MASON		127

SHEET NO. 105A
123 SHEETS

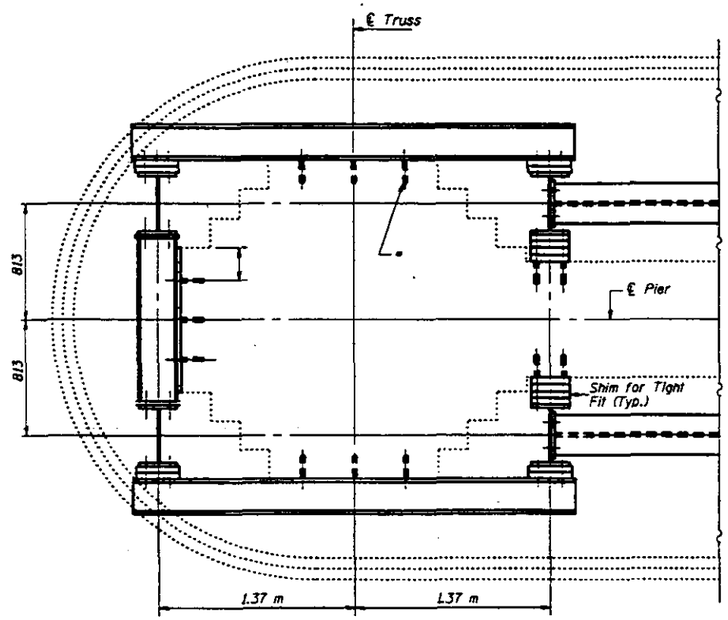

SECTION C-C

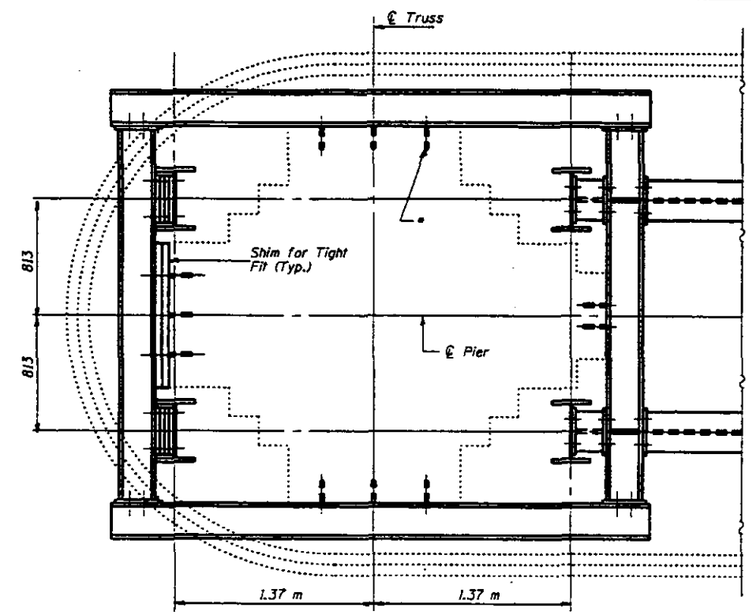

SECTION D-D

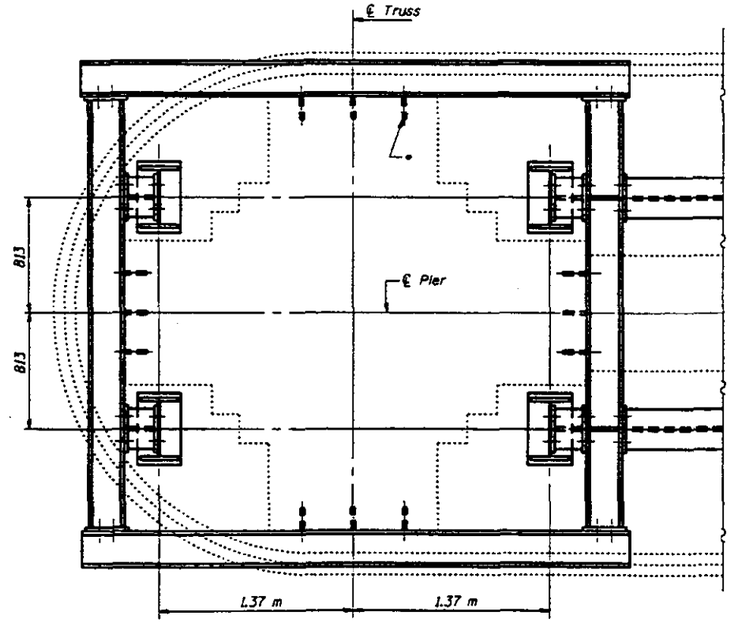

SECTION E-E

HORIZONTAL & VERTICAL LOADS AT EACH BEARING

DL Steel	2270kN
Wind Load Vertical	+1100kN -1100kN
Wind Load Transverse	860kN
** Wind Load Longitudinal	1085kN

** Apply at fixed bearings at Pier #7 only.

* Epoxy grouted galvanized threaded rods For removal burn or chip rods 40 mm into the concrete and patch with epoxy mortar. (Typ.)

DESIGNED	JLC
CHECKED	LSH
DRAWN	R. Doty
CHECKED	JLC

June 26, 1997

EXAMINED Raj. S. Kapur
LICENSED DESIGN ENGINEER

PASSED Ralph E. Anderson
LICENSED BRIDGES AND STRUCTURES

TEMPORARY SUPPORT SYSTEM
AT PIERS #6 AND #7
F.A.P. RT. 315 SEC. 140B-I-4
FULTON AND MASON COUNTIES
STA. 10+646.69

STATE OF ILLINOIS
DEPARTMENT OF TRANSPORTATION

F.A.P. 315	140B-I-4	FULTON & MASON		128

SHEET NO. 105B
123 SHEETS

STD 1-14-98

102

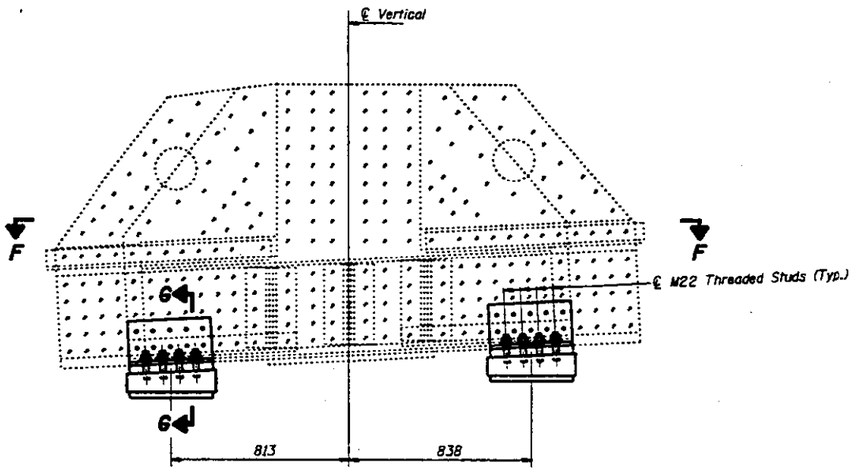

ELEVATION AT PIER #6
(Looking North)
(Elevation at Pier #7 is similar by rotation of 180°)

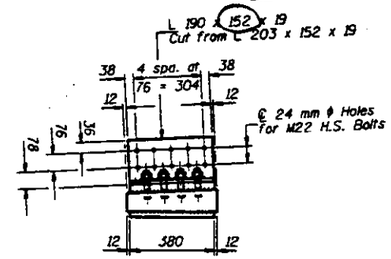

VIEW H-H

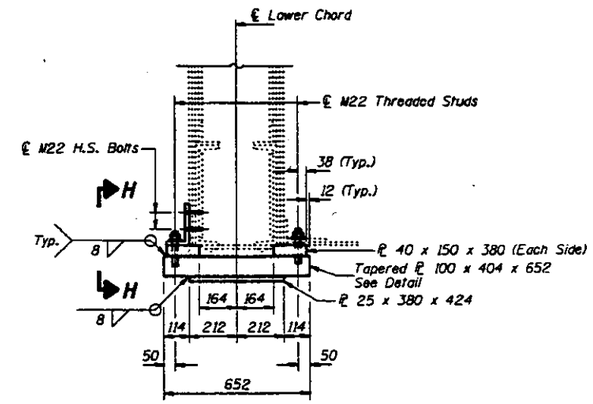

SECTION G-G

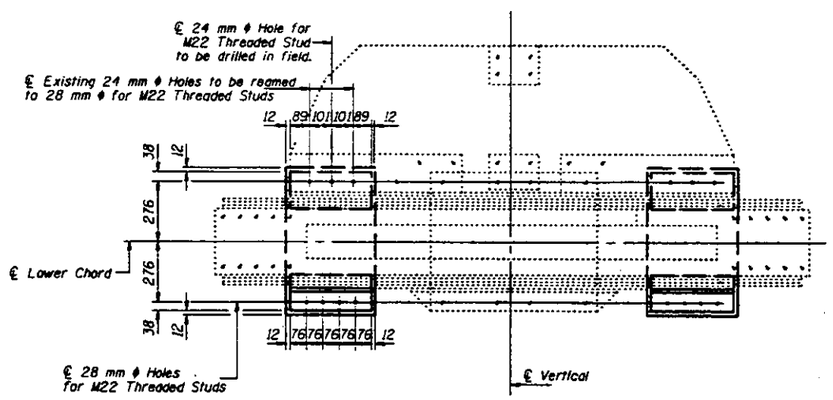

SECTION F-F

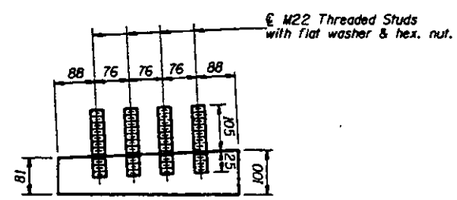

TAPERED ℙ DETAIL
(Looking North)

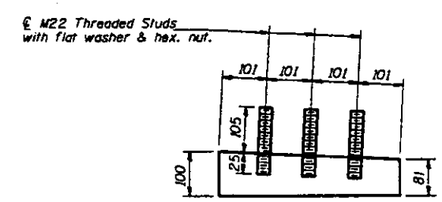

TAPERED ℙ DETAIL
(Looking South)

Notes: All plates shall be AASHTO M270M Grade 345. Quantity of Structural Steel is included with "Furnishing and Erecting Structural Steel." Cost of reaming existing holes and field drilling holes is included with "Furnishing and Erecting Structural Steel."
Brackets and plates are to remain in place after Temporary Support System is removed.

TWO PIERS
BILL OF MATERIAL

Item	Unit	Total
Temporary Support System	Each	2
Jacking and Cribbing	Each	4

DESIGNED	JLC
CHECKED	LSH
DRAWN	R. Doty
CHECKED	JLC

June 26, 1997

ENGINEER OF BRIDGE DESIGN

CHIEF ENGINEER OF BRIDGES AND STRUCTURES

TEMPORARY SUPPORT SYSTEM
AT PIERS #6 AND #7
F.A.P. RT. 315 SEC. 140B-I-4
FULTON AND MASON COUNTIES
STA. 10+646.69

STATE OF ILLINOIS
DEPARTMENT OF TRANSPORTATION

ROUTE NO.	SECTION	COUNTY	TOTAL SHEETS	SHEET NO.
F.A.P. 315	140B-I-4	FULTON & MASON		
FED. ROAD DIST. NO. 7	ILLINOIS	FED. AID PROJECT-		

SHEET NO. 106
123 SHEETS

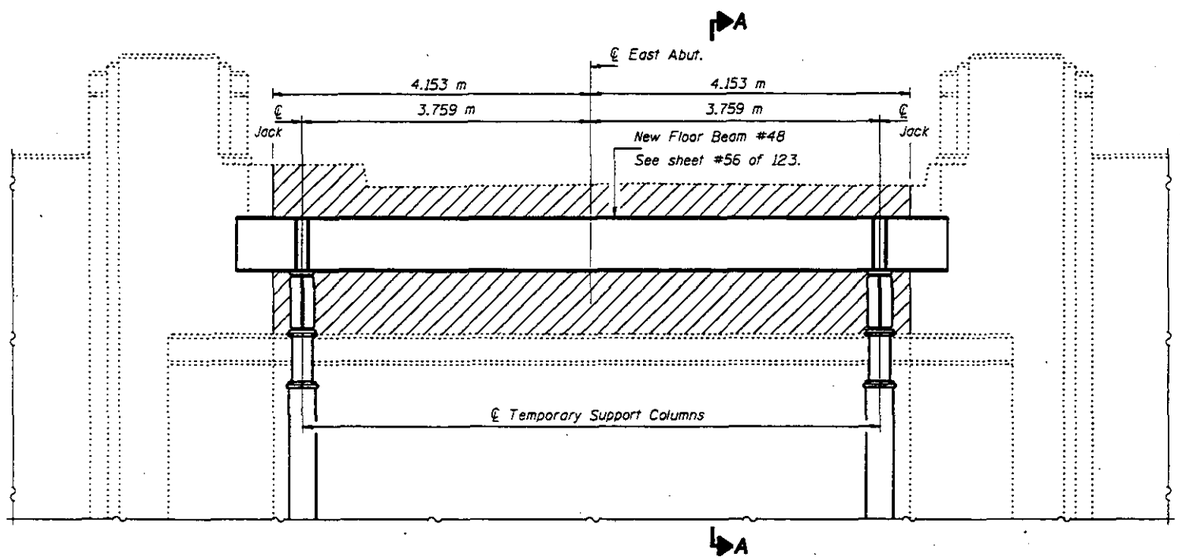

ELEVATION AT EAST ABUTMENT

(Looking East)

Notes: Hatched area indicates "Concrete Removal". For quantity see sheet #107 of 123.

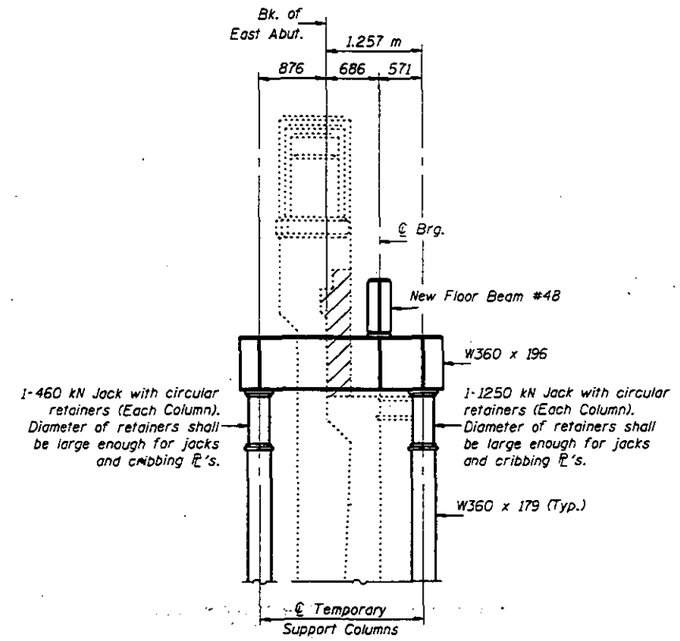

SECTION A-A

HORIZONTAL & VERTICAL LOADS AT EACH BEARING

DL Steel	610 kN
Wind Load Vertical	±323 kN -323 kN
Wind Load Transverse	270 kN

NOTES:

1. Existing concrete deck from spans 6, 7, and 8 shall be removed before beginning jacking and cribbing.
2. Existing floor beams 46, 47, & 48 and the existing stringers between them shall be removed and replaced before jacking the truss.
3. Existing approach pavement and existing backwall as shown shall be removed for installation of temporary support system.
4. The temporary support system, jacks, and cribbing is conceptually shown for bidding purposes only. additional members not shown may be required. A complete design, signed and sealed by a Illinois Licensed Structural Engineer shall be submitted to the Department by the Contractor for approval.
5. The temporary support system, jacks, and cribbing shall be designed to transfer the vertical and horizontal loads shown in the table to the abutment. Cribbing must provide for thermal effects from respective spans.
6. The members selected for the temporary support system, jacks, and cribbing shall provide adequate clearance to perform the work on the abutment. △1
7. New concrete shall be poured to elevation 146.102. The remainder shall be poured after the temporary support system is removed.
8. Pier 5 and the east abutment may be worked on simultaneously as laid out in the sequence of construction.
9. The truss shall be raised a maximum of 3 mm. All jacks shall be raised and lowered simultaneously.

BILL OF MATERIAL

Item	Unit	Total
Temporary Support System	Each	1
Jacking & Cribbing	Each	2

DESIGNED	JLC
CHECKED	LSH
DRAWN	John F. Schneller Jr.
CHECKED	JLC

June 26, 1997

EXAMINED Greg S. Keeper ENGINEER OF BRIDGE DESIGN

PASSED Ralph E. Anderson ENGINEER OF BRIDGES AND STRUCTURES

TEMPORARY SUPPORT SYSTEM AT EAST ABUTMENT F.A.P. RT. 315 SEC. 140B-I-4 FULTON AND MASON COUNTIES STA. 10+646.69

△1 Revised 7-16-97 STD

STATE OF ILLINOIS
DEPARTMENT OF TRANSPORTATION

PROJECT NO.	SECTION	COUNTY	CONTR. NO.	SHEET
F.A.P. 315	140B-1-4	FULTON & MASON		130

SHEET NO. 107
123 SHEETS

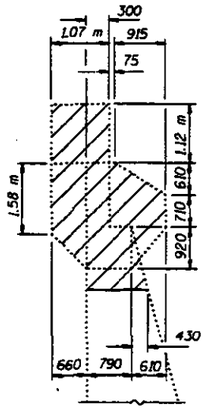

SOUTH END VIEW

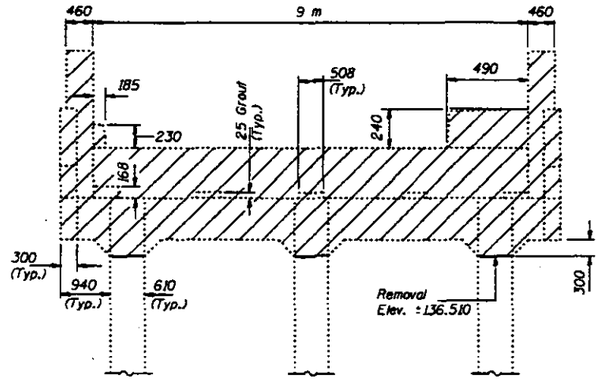

ELEVATION - WEST ABUTMENT
(Looking West)

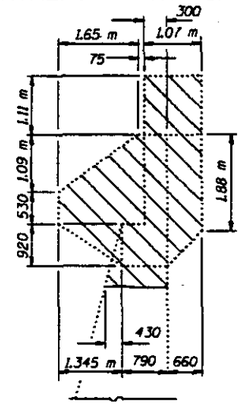

NORTH END VIEW

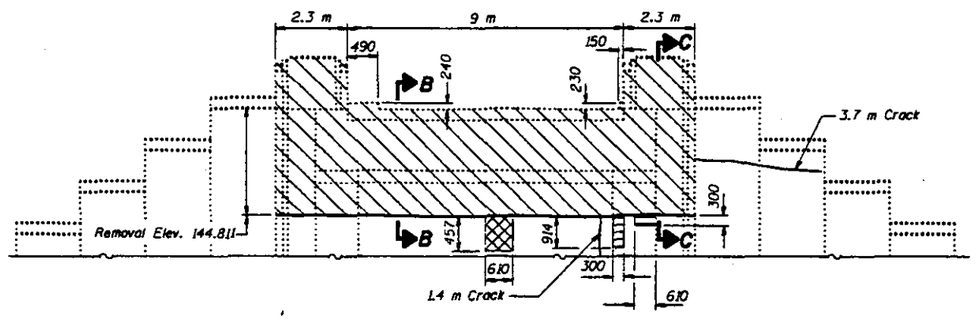

ELEVATION - EAST ABUTMENT
(Looking East)

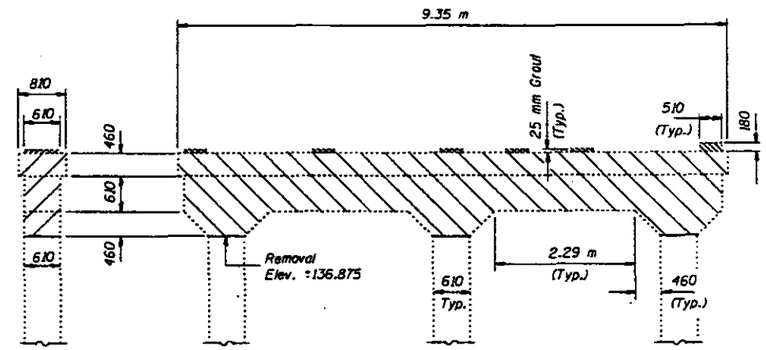

END VIEW

ELEVATION - PIER #1
(Looking East)

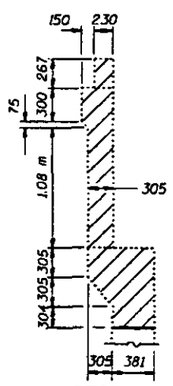

SECTION B-B

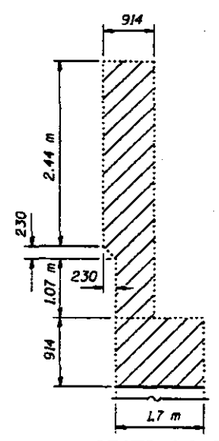

SECTION C-C

BILL OF MATERIAL

Item	Unit	E. Abut.	W. Abut.	Pier #1
Concrete Removal	m^3	28.5	15.4	7.9
Formed Concrete Repair (Greater than 125 mm)	m^2	0.5	—	—
Formed Concrete Repair (Less than or Equal to 125 mm)	m^2	0.3	—	—
Epoxy Crack Sealing	m	5.1	—	—

Legend: indicates "Concrete Removal."
indicates "Formed Concrete Repair (Greater than 125 mm)."
indicates "Formed Concrete Repair (Less than or Equal to 125 mm)."

Note: Existing Reinforcement Bars extending into removed areas shall be cleaned, straightened and incorporated into new construction. Cost included with "Concrete Removal".

DESIGNED	JLC
CHECKED	TTRL
DRAWN	R. Doty
CHECKED	TTBB JLC

June 26, 1997
EXAMINED
ENGINEER OF BRIDGE DESIGN
PASSED
ENGINEER OF BRIDGES AND STRUCTURES

CONCRETE REMOVAL
AND REPAIR DETAILS
F.A.P. RT. 315 SEC. 140B-1-4
FULTON AND MASON COUNTIES
STA. 10+646.69

STATE OF ILLINOIS
DEPARTMENT OF TRANSPORTATION

ROUTE NO.	SECTION	COUNTY	TOTAL SHEETS	SHEET NO.
F.A.P. 315	140B-I-4	FULTON & MASON	131	

SHEET NO. 108
123 SHEETS

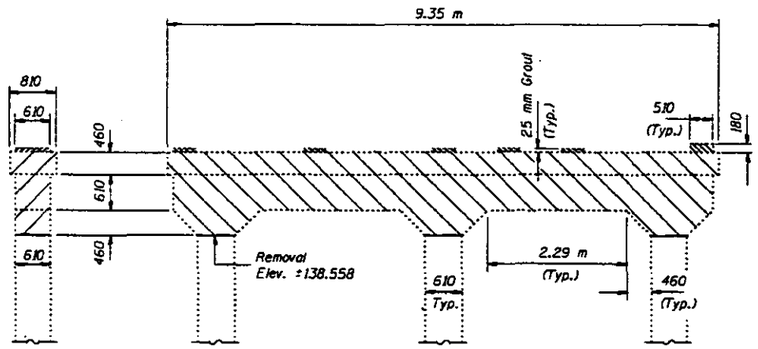

END VIEW

ELEVATION - PIER #2
(Looking East)

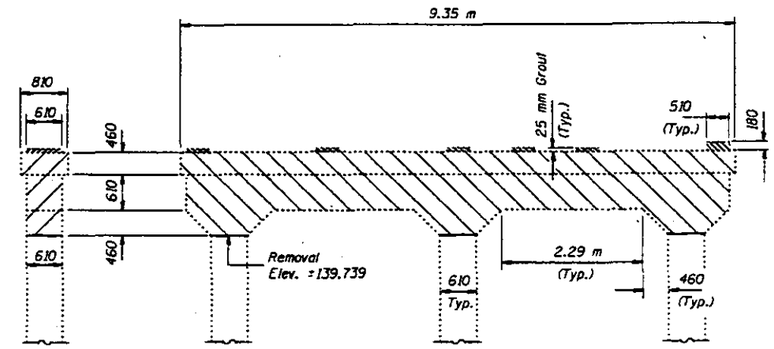

END VIEW

ELEVATION - PIER #3
(Looking East)

BILL OF MATERIAL

Item	Unit	Pier #2	Pier #3
Concrete Removal	m^3	7.9	7.9

Legend: ▨ indicates "Concrete Removal."

Note: Existing Reinforcement Bars extending into removed areas shall be cleaned, straightened and incorporated into new construction. Cost included with "Concrete Removal".

DESIGNED	JLC
CHECKED	TTBB
DRAWN	R. Doty
CHECKED	TTBB JLC

June 26, 1997

ENGINEER OF ROAD STUDIES

ENGINEER OF BRIDGES AND STRUCTURES

CONCRETE REMOVAL
F.A.P. RT. 315 SEC. 140B-I-4
FULTON AND MASON COUNTIES
STA. 10+646.69

STATE OF ILLINOIS
DEPARTMENT OF TRANSPORTATION

F.A.P. 315	140B-1-4	FULTON & MASON		132

SHEET NO. 109
123 SHEETS

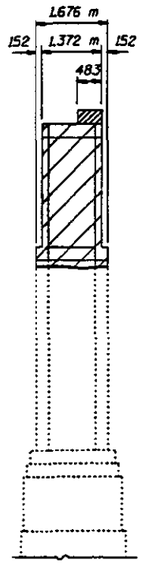

NORTH END VIEW

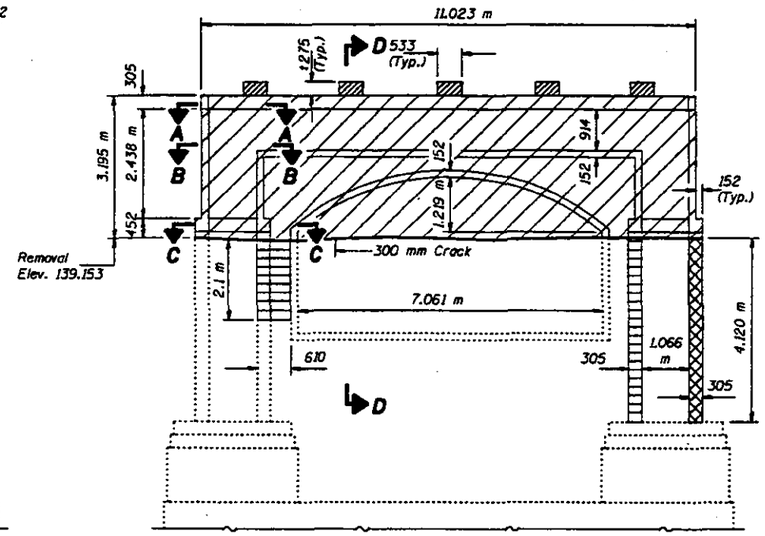

ELEVATION - PIER #4
(Looking East)

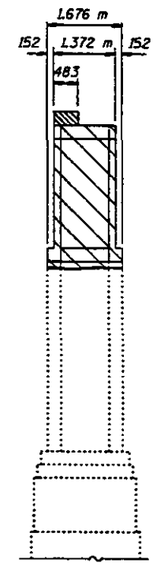

SOUTH END VIEW

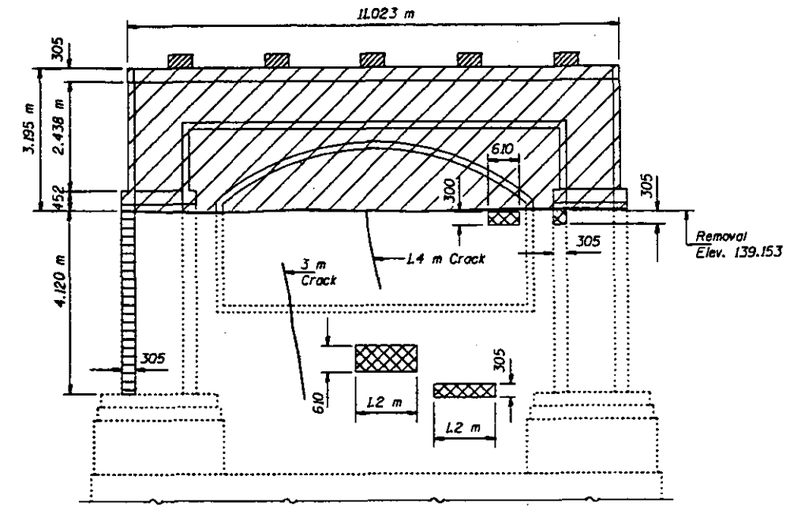

ELEVATION - PIER #4
(Looking West)

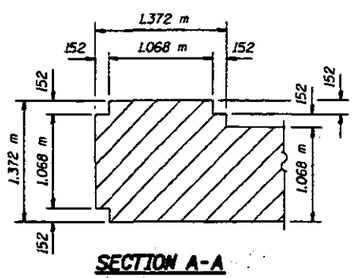

SECTION A-A

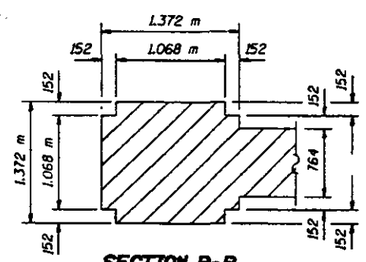

SECTION B-B

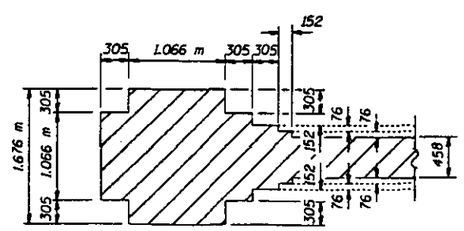

SECTION C-C

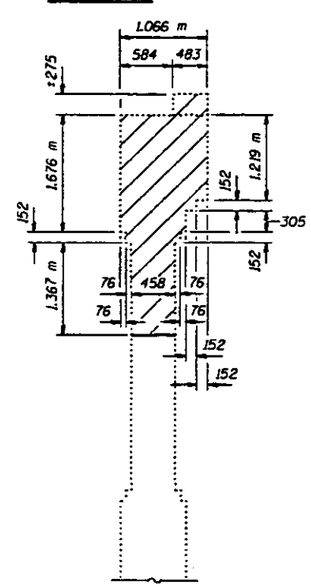

SECTION D-D

Notes: Existing reinforcement bars extending into removed areas shall be cleaned, straightened and incorporated into the new construction. Cost included with "Concrete Removal."

Legend:
- indicates "Concrete Removal."
- indicates "Formed Concrete Repair (Less Than or Equal to 125 mm)."
- indicates "Formed Concrete Repair (Greater Than 125 mm)."

BILL OF MATERIAL

Item	Unit	Total
Concrete Removal	m^3	29.2
Formed Concrete Repair (Less Than or Equal to 125 mm)	m^2	2.6
Formed Concrete Repair (Greater Than 125 mm)	m^2	3.8
Epoxy Crack Sealing	m	4.7

DESIGNED	TWM
CHECKED	TTBB
DRAWN	R. Doty
CHECKED	TWM TTBB

June 26, 1997
CHANGED Craig D. Hagner — ENGINEER OF MOBILE DESIGN
PASSED Robert E. Anderson — ENGINEER OF BRIDGES AND STRUCTURES

CONCRETE REMOVAL AND REPAIR DETAILS
F.A.P. RT. 315 SEC. 140B-1-4
FULTON AND MASON COUNTIES
STA. 10+646.69

STATE OF ILLINOIS
DEPARTMENT OF TRANSPORTATION

F.A.P. 315	140B-1-4	FULTON & MASON		133

SHEET NO. 110
123 SHEETS

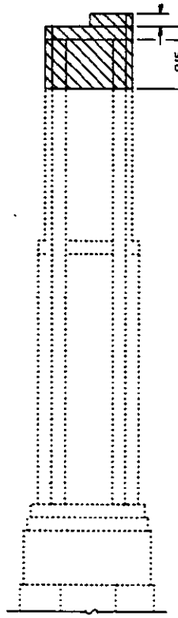

NORTH END VIEW

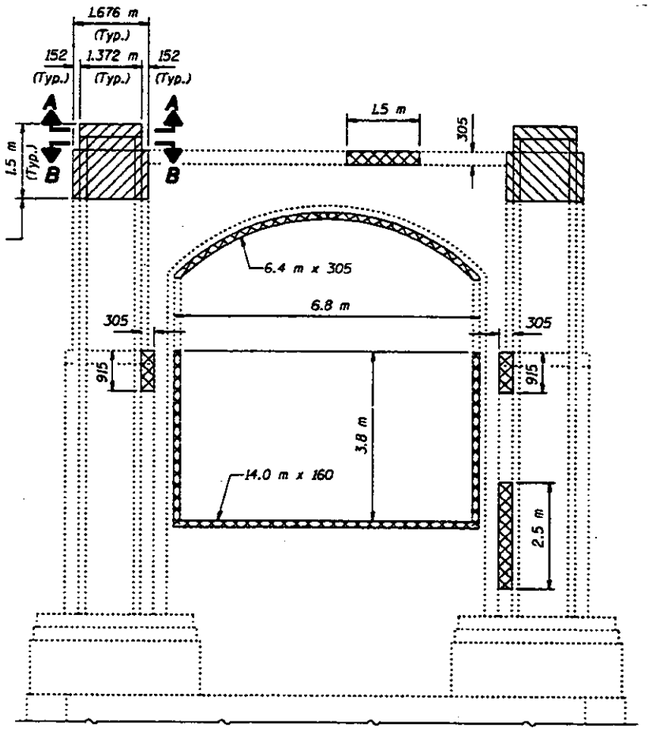

ELEVATION - PIER #5

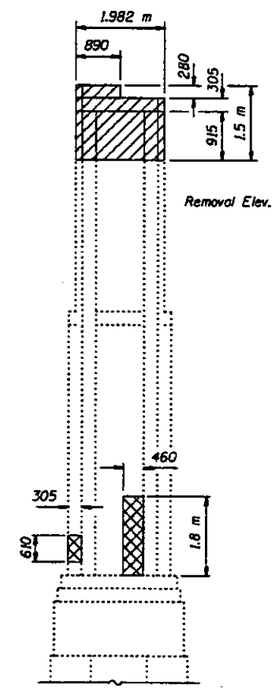

SOUTH END VIEW

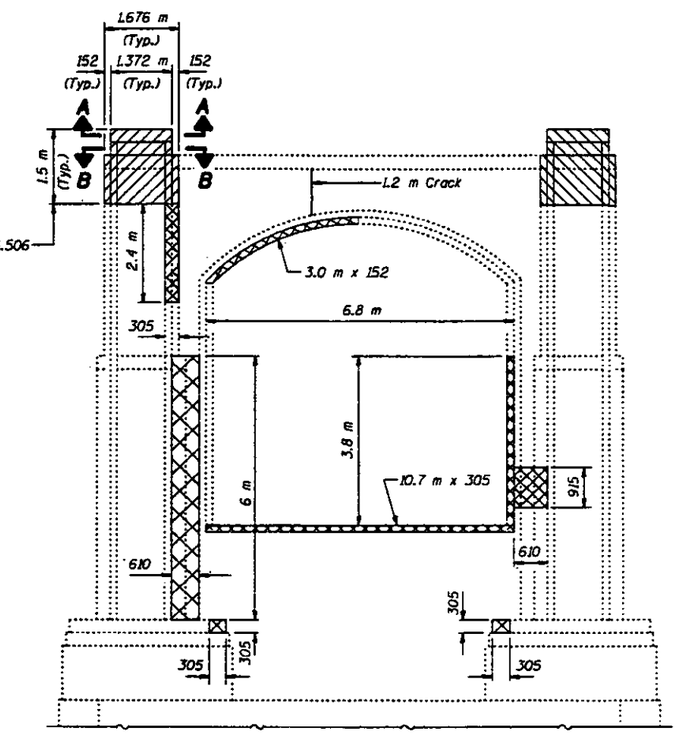

ELEVATION - PIER #5
(Looking West)

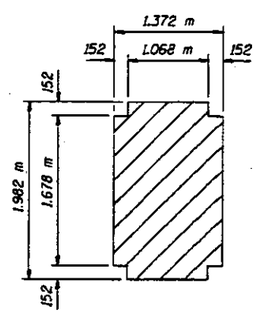

SECTION A-A

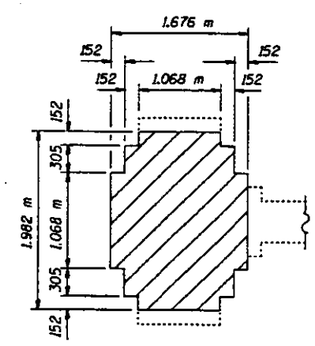

SECTION B-B

BILL OF MATERIAL

Item	Unit	Total
Concrete Removal	m^3	7.7
Formed Concrete Repair (Less Than or Equal to 125 mm)	m^2	15.8
Epoxy Crack Sealing	m	1.2

Notes: Existing reinforcement bars extending into removed areas shall be cleaned, straightened and incorporated into the new construction. Cost included with "Concrete Removal."

Legend: indicates "Concrete Removal."
indicates "Formed Concrete Repair (Less Than or Equal to 125 mm)."

DESIGNED	TWM
CHECKED	TTEK
DRAWN	R. Doty
CHECKED	TWM TTEK

June 26, 1997

DIVISION OF HIGHWAY ENGINEERING

DIVISION OF BRIDGES AND STRUCTURES

CONCRETE REMOVAL AND REPAIR DETAILS
F.A.P. RT. 315 SEC. 140B-1-4
FULTON AND MASON COUNTIES
STA. 10+646.69

F.A.P. 315	140B-I-4	FULTON & MASON		134

SHEET NO. 111
123 SHEETS

STATE OF ILLINOIS
DEPARTMENT OF TRANSPORTATION

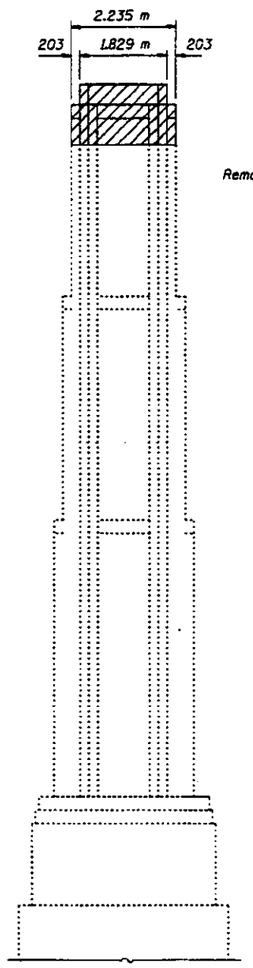

NORTH END VIEW

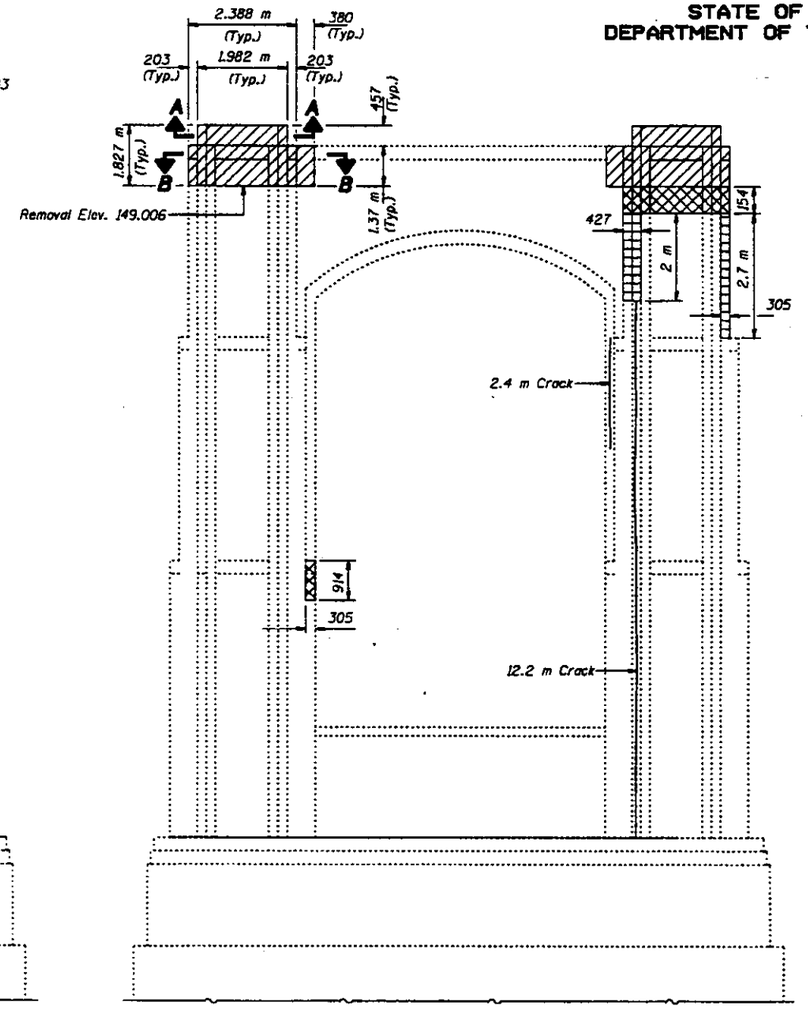

ELEVATION - PIER #6
(Looking East)

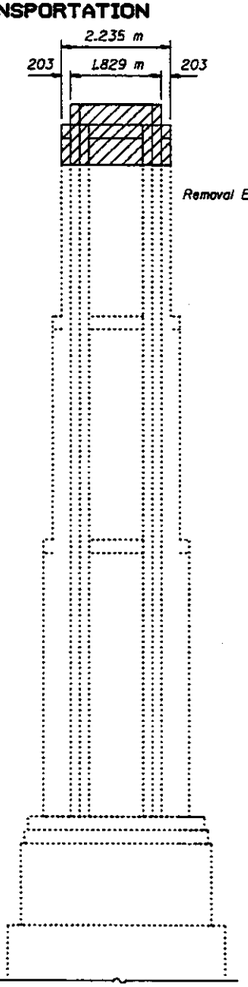

SOUTH END VIEW

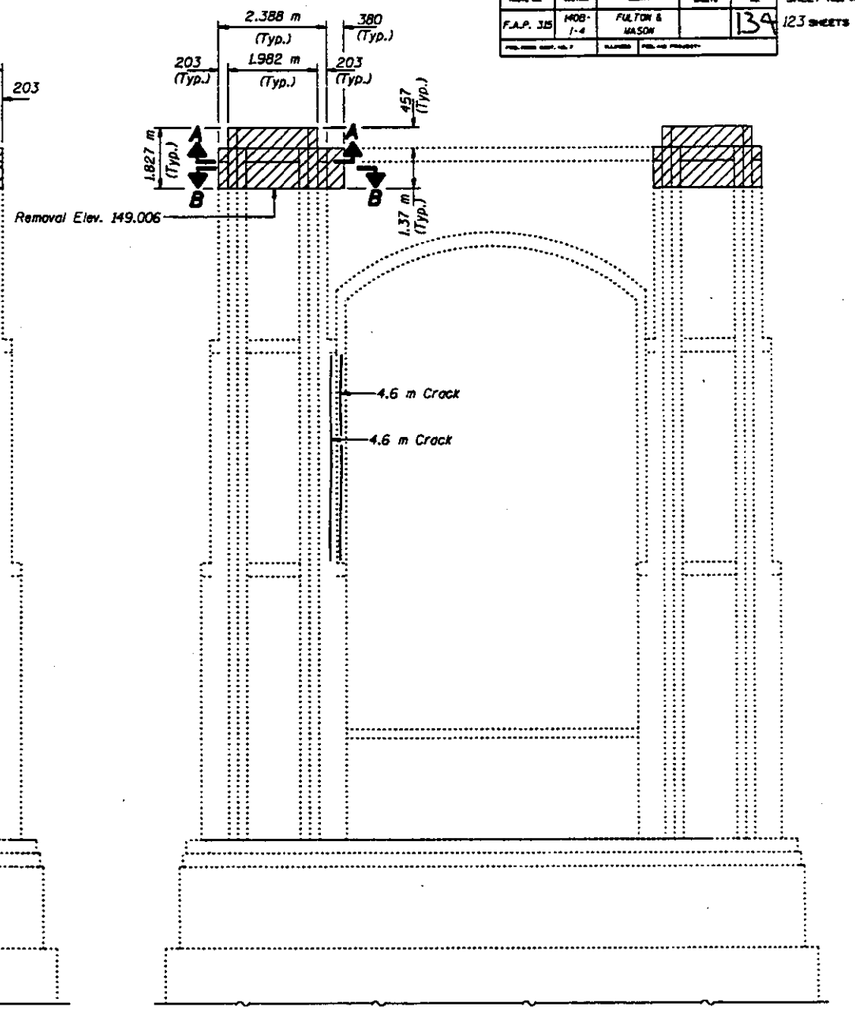

ELEVATION - PIER #6
(Looking West)

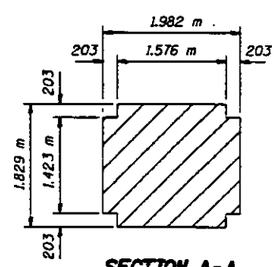

SECTION A-A

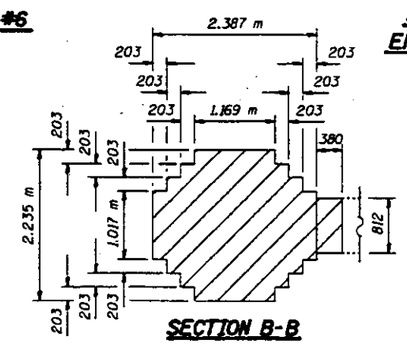

SECTION B-B

BILL OF MATERIAL

Item	Unit	Total
Concrete Removal	m^3	15.9
Formed Concrete Repair (Less Than or Equal to 125 mm)	m^2	0.6
Formed Concrete Repair (Greater Than 125 mm)	m^2	1.7
Epoxy Crack Sealing	m	23.8

Notes: Existing reinforcement bars extending into removed areas shall be cleaned, straightened and incorporated into the new construction. Cost included with "Concrete Removal."

Legend:
- indicates "Concrete Removal."
- indicates "Formed Concrete Repair (Less Than or Equal to 125 mm)."
- indicates "Formed Concrete Repair (Greater Than 125 mm)."

DESIGNED	TWM
CHECKED	TTB
DRAWN	R. Doty
CHECKED	TWM TTB

June 26, 1997

DESIGNED Greg J. Kaper
ENGINEER OF BRIDGE DESIGN

PASSED Robert E. Anderson
ENGINEER OF BRIDGES AND STRUCTURES

CONCRETE REMOVAL AND REPAIR DETAILS
F.A.P. RT. 315 SEC. 140B-I-4
FULTON AND MASON COUNTIES
STA. 10+646.69

STATE OF ILLINOIS
DEPARTMENT OF TRANSPORTATION

ROUTE NO.	SECTION	COUNTY	TOTAL SHEETS	SHEET NO.
F.A.P. 315	140B-I-4	FULTON & MASON		135
FED. ROAD DIST. NO. 7	ILLINOIS	FED. AID PROJECT		

SHEET NO. 112
123 SHEETS

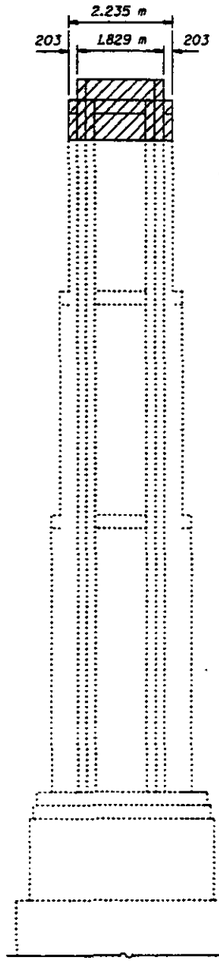

NORTH END VIEW

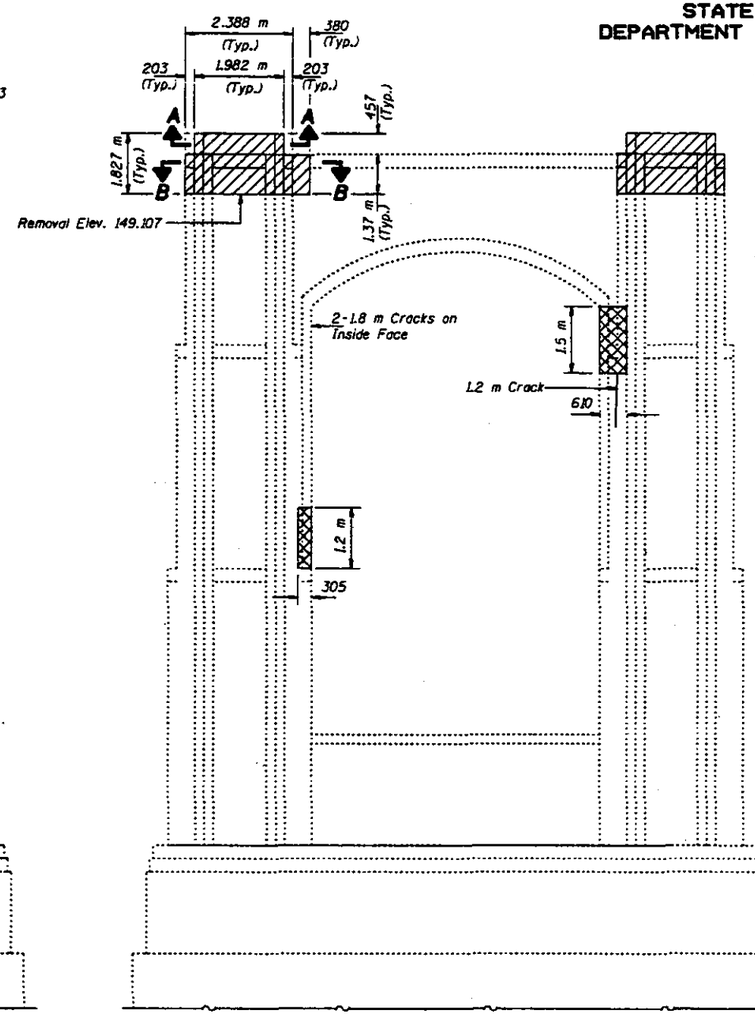

ELEVATION - PIER #7
(Looking East)

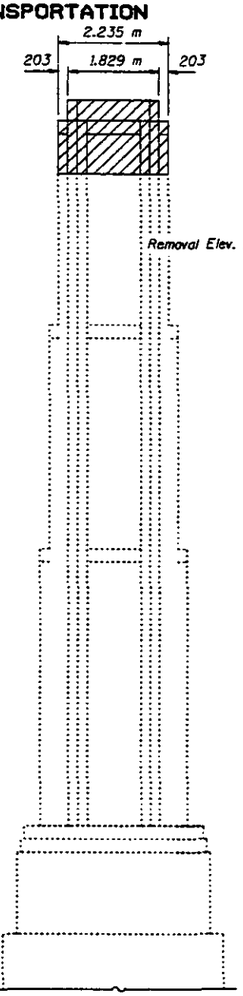

SOUTH END VIEW

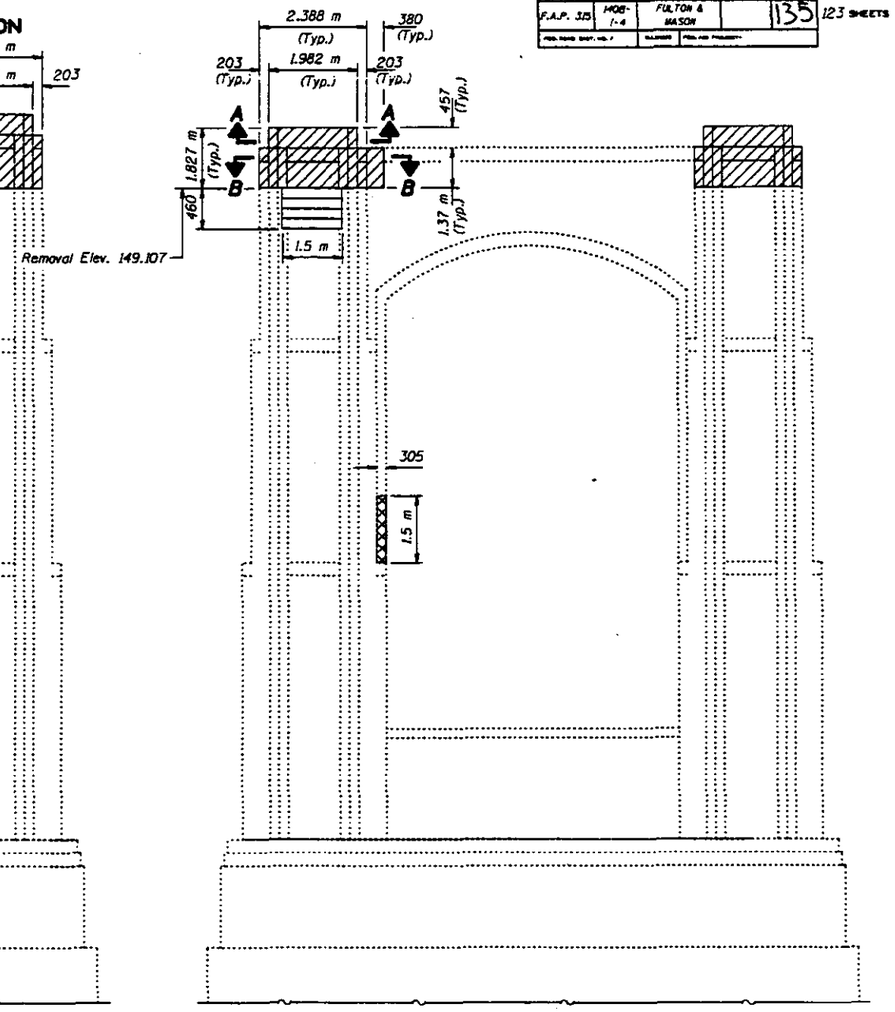

ELEVATION - PIER #7
(Looking West)

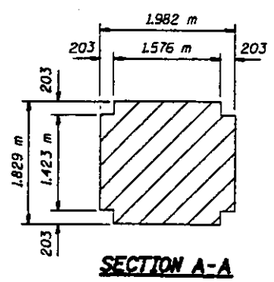

SECTION A-A

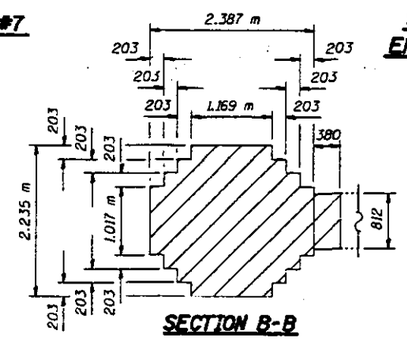

SECTION B-B

BILL OF MATERIAL

Item	Unit	Total
Concrete Removal	m^3	15.9
Formed Concrete Repair (Less Than or Equal to 125 mm)	m^2	1.7
Formed Concrete Repair (Greater Than 125 mm)	m^2	0.7
Epoxy Crack Sealing	m	2.0

Notes: Existing reinforcement bars extending into removed areas shall be cleaned, straightened and incorporated into the new construction. Cost included with "Concrete Removal."

Legend:
- indicates "Concrete Removal."
- indicates "Formed Concrete Repair (Less Than or Equal to 125 mm)."
- indicates "Formed Concrete Repair (Greater Than 125 mm)."

DESIGNED	TWM
CHECKED	TPS
DRAWN	R. Doty
CHECKED	TWM TPS

June 26, 1997

ENGINEER Craig O. Kaper
LICENSE OF ENGINEER OF ILLINOIS

PASSED Ralph E. Anderson
LICENSE OF ENGINEER AND STRUCTURES

CONCRETE REMOVAL AND REPAIR DETAILS
F.A.P. RT. 315 SEC. 140B-I-4
FULTON AND MASON COUNTIES
STA. 10+646.69

Notes: Space reinforcement in cap to miss anchor bolts.
Pour steps monolithically with cap.
All edges shall have standard 20 mm chamfers except as noted.
For anchor bolt installation details see sheet #123 of 123.
Hatched area to be poured after superstructure forms have been removed. Quantity of concrete included with "Concrete Superstructure" on sheet #13 of 123.
For concrete removal details see sheet #107 of 123.
Reinforcement bars designated (E) shall be epoxy coated.
Existing reinforcement bars extending into the new construction shall be cleaned, straightened and incorporated into the new construction. Cost included with "Concrete Removal."

STATE OF ILLINOIS
DEPARTMENT OF TRANSPORTATION

F.A.P. 315	140B-1-4	FULTON & MASON		136	SHEET NO. 113 / 123 SHEETS

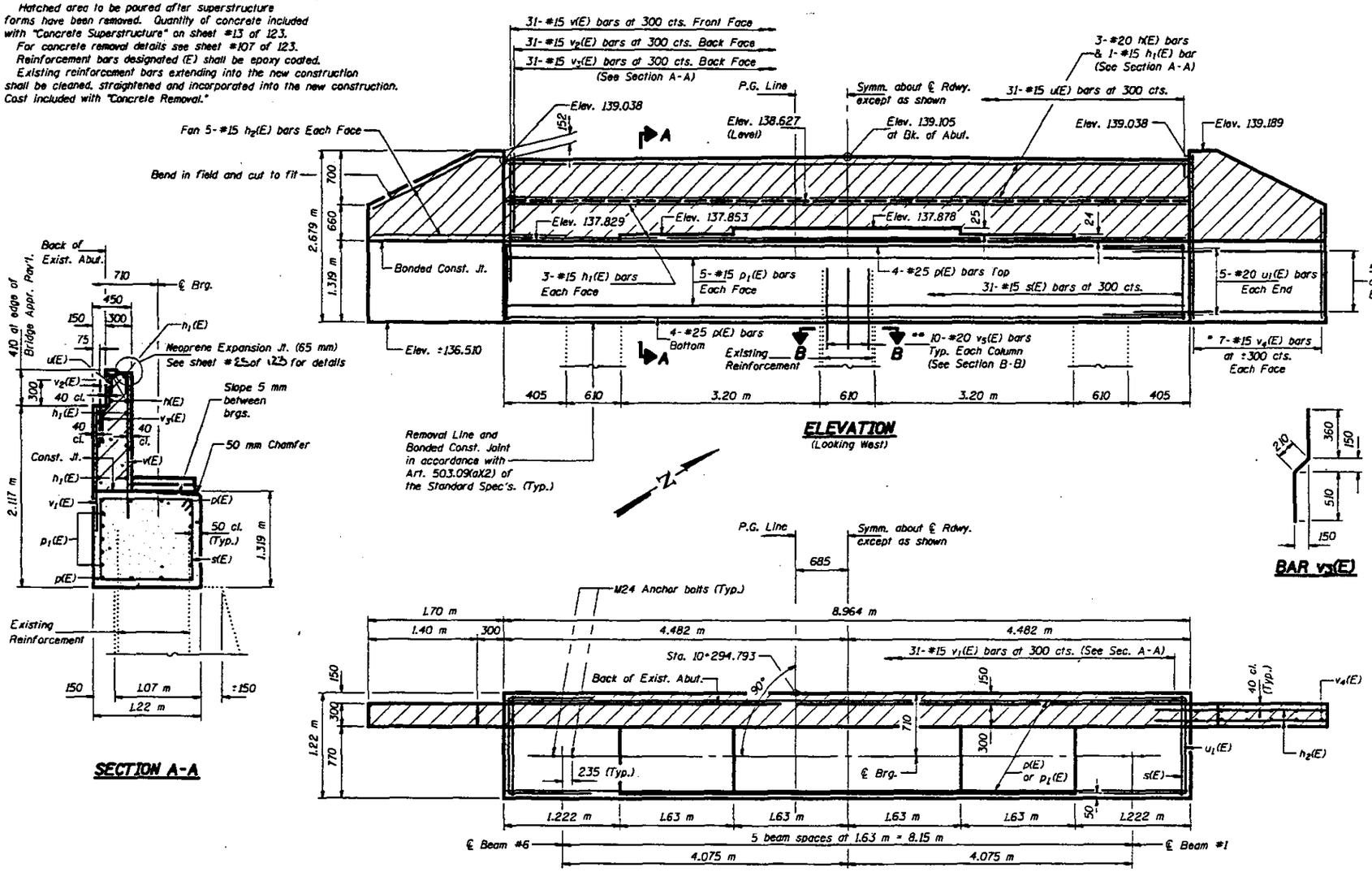

ELEVATION
(Looking West)

SECTION A-A

PLAN

BAR v5(E)

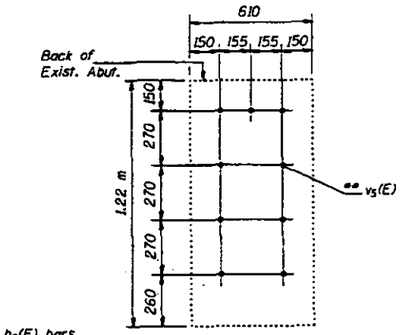

SECTION B-B

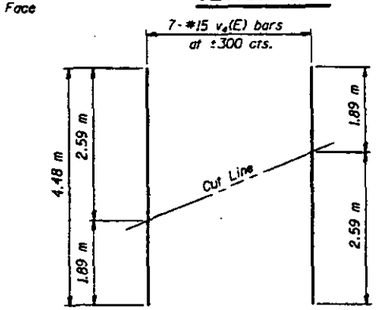

* FIELD CUTTING DIAGRAM
Order v4(E) bars full length. Cut to fit and use remainder of bars in opposite face.

BILL OF MATERIAL

Bar	No.	Size	Length (m)	Shape
h(E)	3	#20	8.88	
h1(E)	7	#15	8.88	
h2(E)	40	#15	2.50	
p(E)	8	#25	8.88	
p1(E)	10	#15	8.88	
s(E)	31	#15	4.96	
u(E)	31	#15	0.59	
u1(E)	10	#20	2.67	
v(E)	31	#15	1.64	
v1(E)	31	#15	1.44	
v2(E)	31	#15	0.81	
v3(E)	31	#15	1.08	
v4(E)	14	#15	4.48	
v5(E)	30	#20	0.87	
Concrete Structures			m³	15.9
Reinforcement Bars, Epoxy Coated			kg	1470
Structure Excavation			m³	40.1

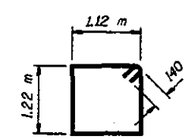

BAR s(E)

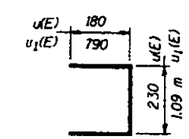

BARS u(E) & u1(E)

** Epoxy grout v5(E) bars in 230 mm Min. drilled holes according to Section 584 of the Standard Specifications.

DESIGNED	JLC
CHECKED	TTB
DRAWN	R. Doty
CHECKED	JLC TTB

June 26, 1997
ENGINEER OF BRIDGE DESIGN
ENGINEER OF BRIDGES AND STRUCTURES

WEST ABUTMENT
F.A.P. RT. 315 SECTION 140B-1-4
FULTON AND MASON COUNTIES
STATION 10+646.69

Notes: Space reinforcement in cap to miss anchor bolts.
Pour steps monolithically with cap.
For concrete removal details see sheet #107 of 123.
For anchor bolt installation details see sheet #123 of 123.
Reinforcement bars designated (E) shall be epoxy coated.
Existing reinforcement bars extending into removed areas shall be cleaned, straightened and incorporated into the new construction. Cost included with "Concrete Removal."
All edges shall have standard 20 mm chamfers.

STATE OF ILLINOIS
DEPARTMENT OF TRANSPORTATION

F.A.P. 315	1408-I-4	FULTON & MASON		137

SHEET NO. 114
123 SHEETS

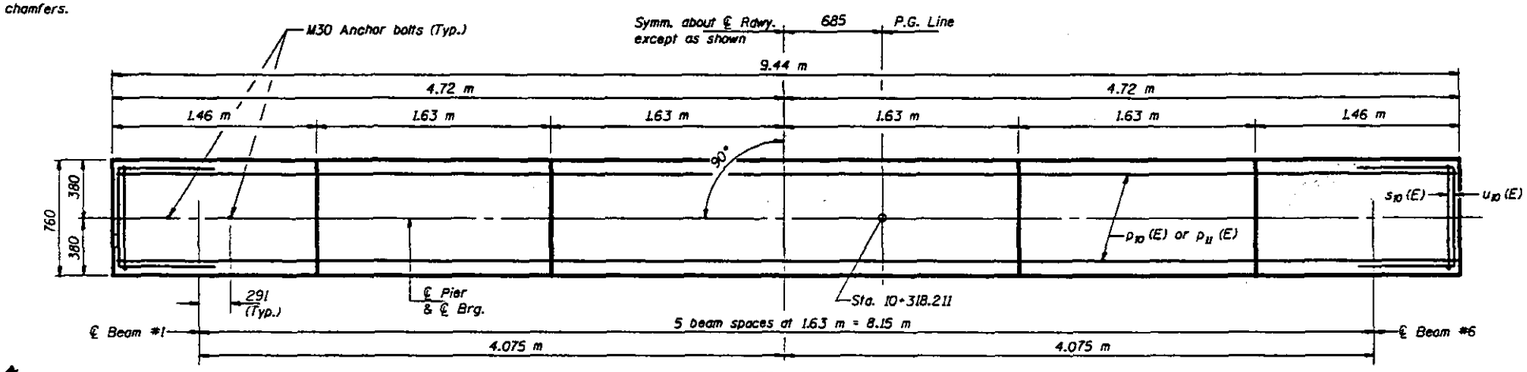

PLAN

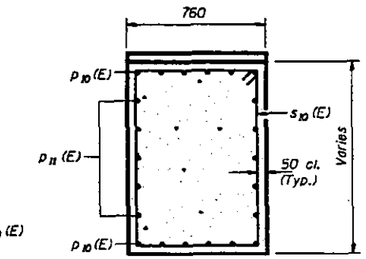

SECTION A-A

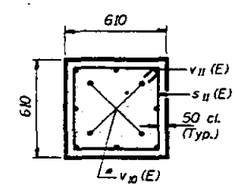

SECTION B-B

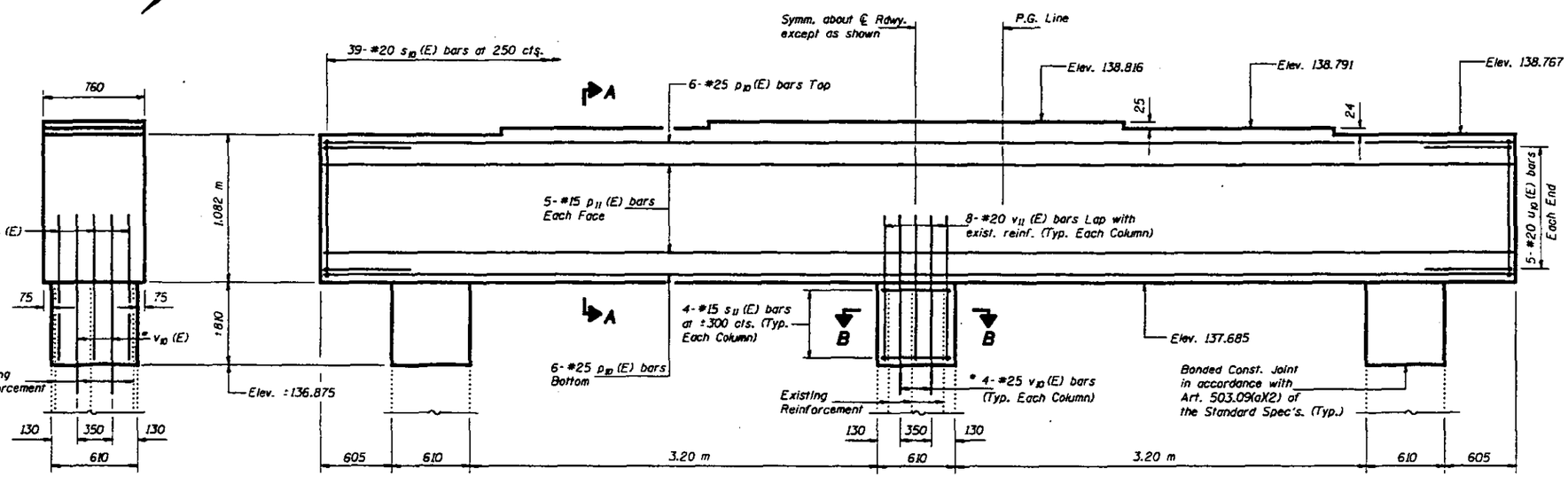

END VIEW

ELEVATION
(Looking East)

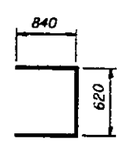

BAR u_{10} (E)

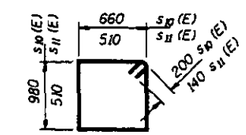

BARS s_{10} (E) & s_{11} (E)

BILL OF MATERIAL

Bar	No.	Size	Length(m)	Shape
p_{10} (E)	12	#25	9.36	
p_{11} (E)	10	#15	9.36	
s_{10} (E)	39	#20	3.68	
s_{11} (E)	12	#15	2.32	
u_{10} (E)	10	#20	2.30	
v_{10} (E)	12	#25	1.85	
v_{11} (E)	24	#20	1.28	
Reinforcement Bars, Epoxy Coated			kg	1180
Concrete Structures			m3	8.8

** Epoxy grout v_{10} (E) bars in 230 mm Min. drilled holes according to Section 584 of the Standard Specifications.

DESIGNED	JLC
CHECKED	TTPB
DRAWN	R. Doty
CHECKED	JLC TTPB

June 26, 1997

ENGINEER OF SUPERS DESIGN

ENGINEER OF BRIDGES AND STRUCTURES

PIER 1
F.A.P. RT. 315 SEC. 1408-I-4
FULTON AND MASON COUNTIES
STA. 10+646.69

Notes: Space reinforcement in cap to miss anchor bolts.
Pour steps monolithically with cap.
For concrete removal details see sheet #108 of 123.
For anchor bolt installation details see sheet #123 of 123.
Reinforcement bars designated (E) shall be epoxy coated.
Existing reinforcement bars extending into removed areas shall be cleaned, straightened and incorporated into the new construction. Cost included with "Concrete Removal."
All edges shall have standard 20 mm chamfers.

STATE OF ILLINOIS
DEPARTMENT OF TRANSPORTATION

ROUTE NO.	SECTION	COUNTY	TOTAL SHEETS	SHEET NO.
F.A.P. 315	140B-I-4	FULTON & MASON		138

SHEET NO. 115
123 SHEETS

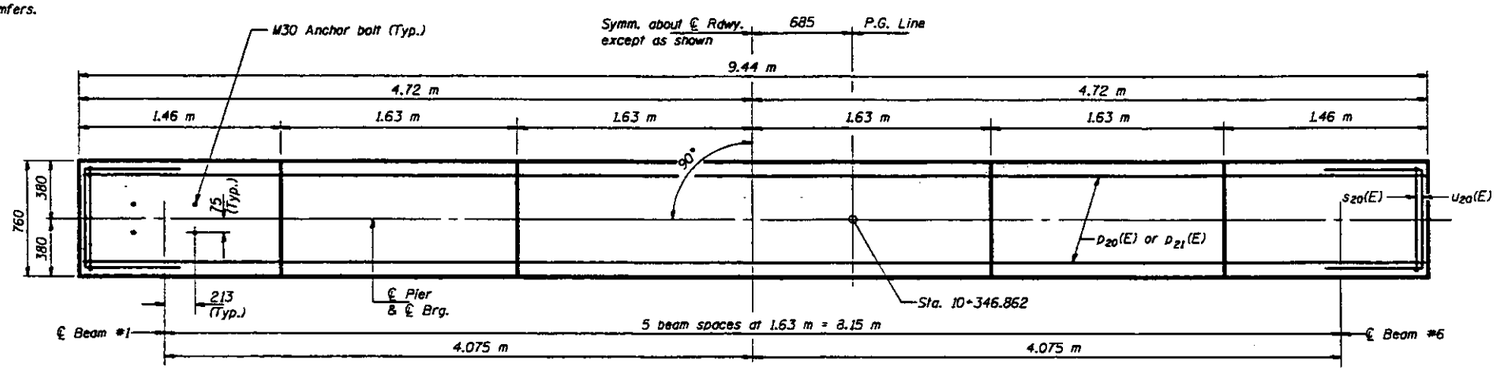

PLAN

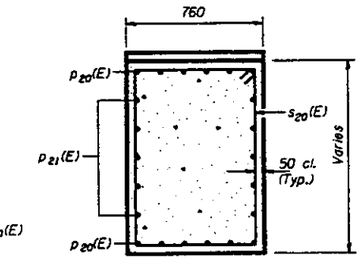

SECTION A-A

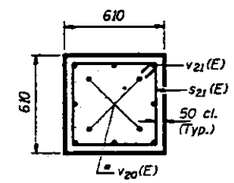

SECTION B-B

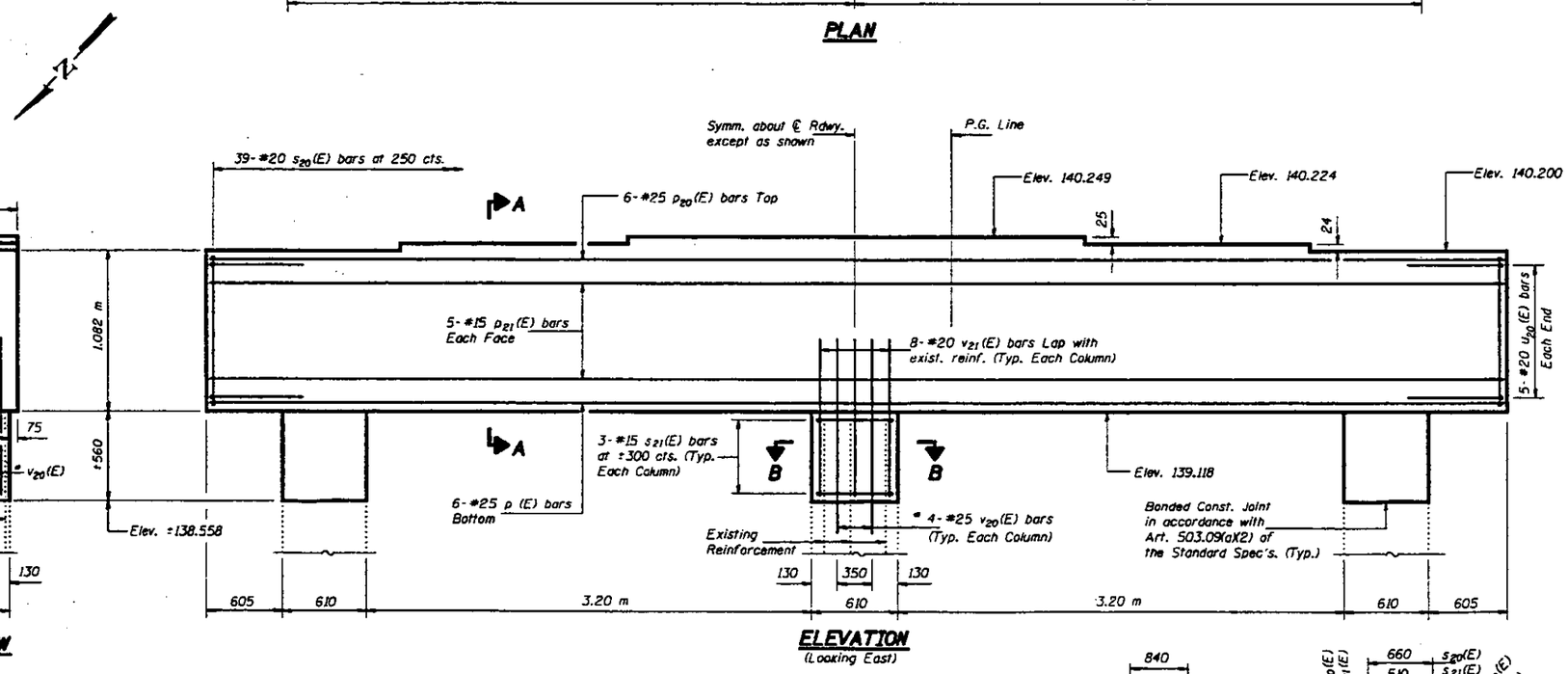

END VIEW

ELEVATION
(Looking East)

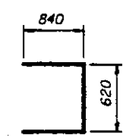

BAR u_{20}(E)

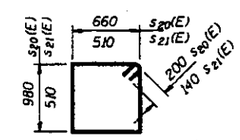

BARS s_{20}(E) & s_{21}(E)

BILL OF MATERIAL

Bar	No.	Size	Length(m)	Shape
p_{20}(E)	12	#25	9.36	
p_{21}(E)	10	#15	9.36	
s_{20}(E)	39	#20	3.68	
s_{21}(E)	9	#15	2.32	
u_{20}(E)	10	#20	2.30	
v_{20}(E)	12	#25	1.60	
v_{21}(E)	24	#20	1.03	
Reinforcement Bars, Epoxy Coated			kg	1150
Concrete Structures			m3	8.5

DESIGNED	JLC
CHECKED	TTBB
DRAWN	R. Doty
CHECKED	JLC TTBB

June 26, 1997

EXAMINED Craig J. Kasper ENGINEER OF HIGHWAY DESIGN
PASSED Robert E. Cronkhright ENGINEER OF BRIDGES AND STRUCTURES

** Epoxy grout v_{20}(E) bars in 230 mm Min. drilled holes according to Section 584 of the Standard Specifications.

PIER 2
F.A.P. RT. 315 SEC. 140B-I-4
FULTON AND MASON COUNTIES
STA. 10+646.69

Notes: Space reinforcement in cap to miss anchor bolts.
Pour steps monolithically with cap.
For concrete removal details see sheet #108 of 123.
For anchor bolt installation details see sheet #123 of 123.
Reinforcement bars designated (E) shall be epoxy coated.
Existing reinforcement bars extending into removed areas shall be cleaned, straightened and incorporated into the new construction. Cost included with "Concrete Removal."
All edges shall have standard 20 mm chamfers.

STATE OF ILLINOIS
DEPARTMENT OF TRANSPORTATION

ROUTE NO.	SECTION	COUNTY	TOTAL SHEETS	SHEET NO.
F.A.P. 315	140B-I-4	FULTON & MASON	139	123 SHEETS

SHEET NO. 116

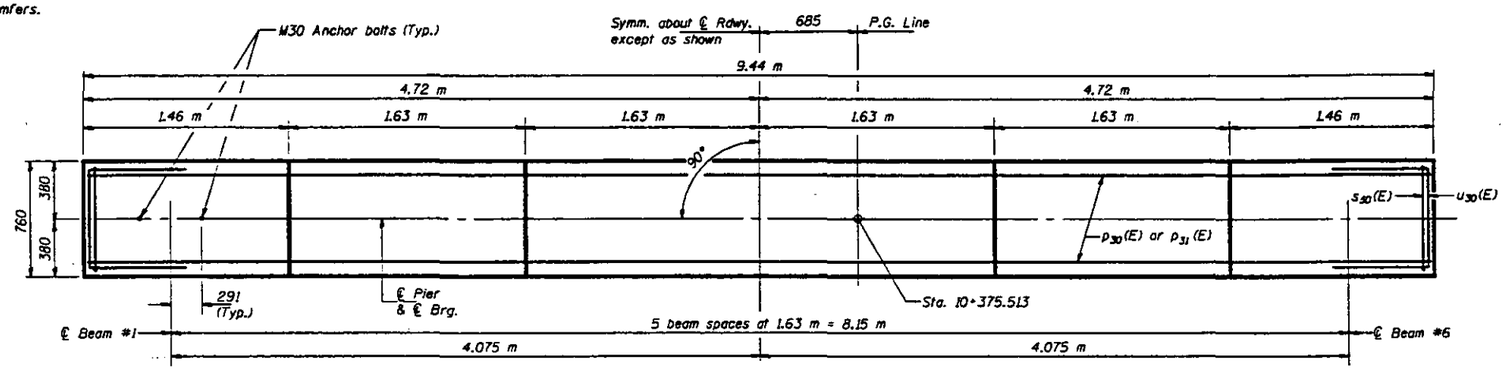

PLAN

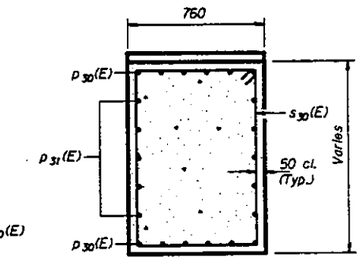

SECTION A-A

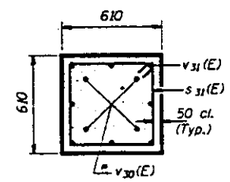

SECTION B-B

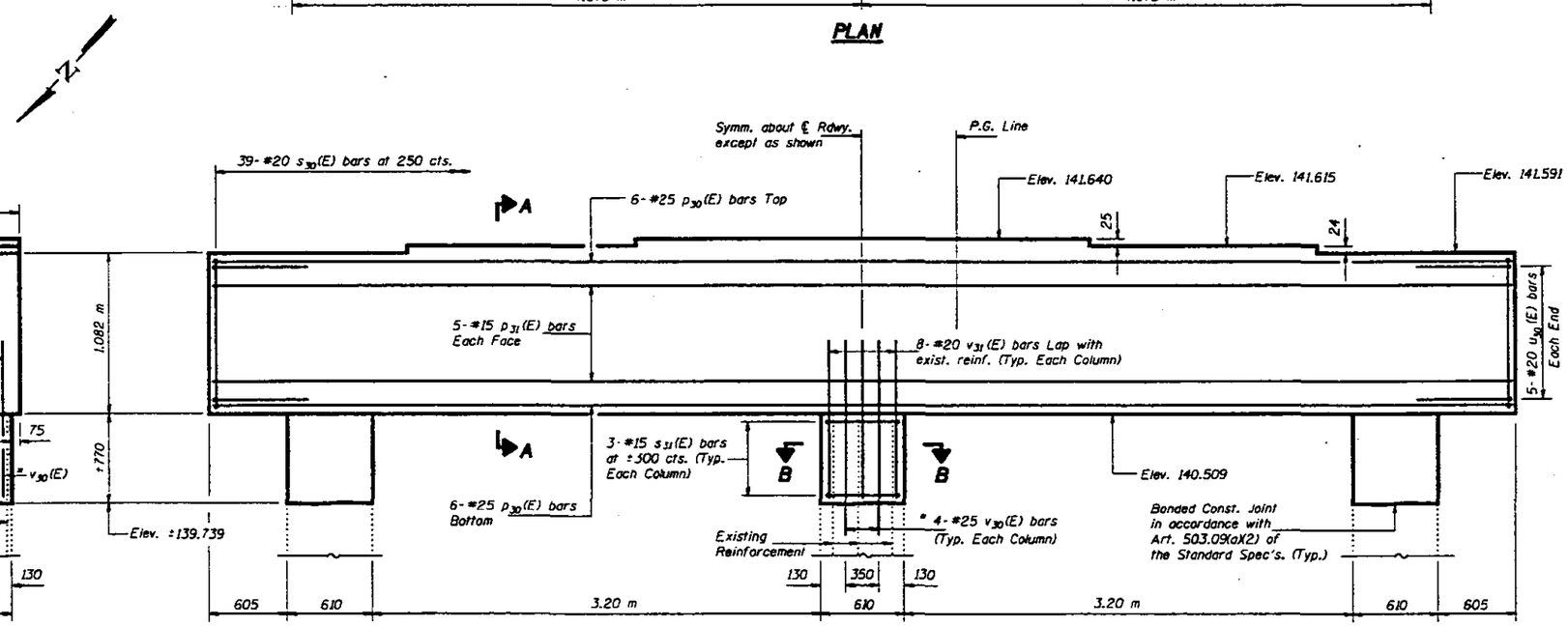

END VIEW

ELEVATION
(Looking East)

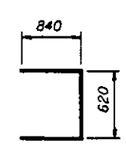

BAR $u_{30}(E)$

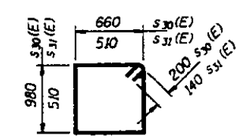

BARS $s_{30}(E)$ & $s_{31}(E)$

BILL OF MATERIAL

Bar	No.	Size	Length(m)	Shape
$p_{30}(E)$	12	#25	9.36	
$p_{31}(E)$	10	#15	9.36	
$s_{30}(E)$	39	#20	3.68	
$s_{31}(E)$	9	#15	2.32	
$u_{30}(E)$	10	#20	2.30	
$v_{30}(E)$	12	#25	1.81	
$v_{31}(E)$	24	#20	1.24	
Reinforcement Bars, Epoxy Coated			kg	1170
Concrete Structures			m3	8.7

DESIGNED	JLC
CHECKED	TPB
DRAWN	R. Doty
CHECKED	JLC TPB

June 26, 1997
ENGINEER OF BRIDGE DESIGN
ENGINEER OF BRIDGES AND STRUCTURES

** Epoxy grout $v_{30}(E)$ bars in 230 mm Min. drilled holes according to Section 584 of the Standard Specifications.

PIER 3
F.A.P. RT. 315 SEC. 140B-I-4
FULTON AND MASON COUNTIES
STA. 10+646.69

F.A.P. 315	MOB-I-4	FULTON & MASON		140

SHEET NO. 117
123 SHEETS

STATE OF ILLINOIS
DEPARTMENT OF TRANSPORTATION

Notes: Space reinforcement in steps and cap to miss anchor bolts.
For anchor bolt installation details see sheet #123 of 123.
Existing reinforcement bars extending into the new construction shall be cleaned, straightened and incorporated into the new construction. Cost included with "Concrete Removal."
For concrete removal and pier repair details see sheet #109 of 123.
For truss jacking details see sheet #103 of 123.
Reinforcement bars designated (E) shall be epoxy coated.
All edges shall have standard 20 mm chamfers.

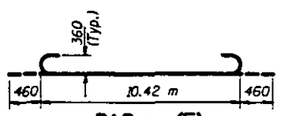

BAR p_{40}(E)

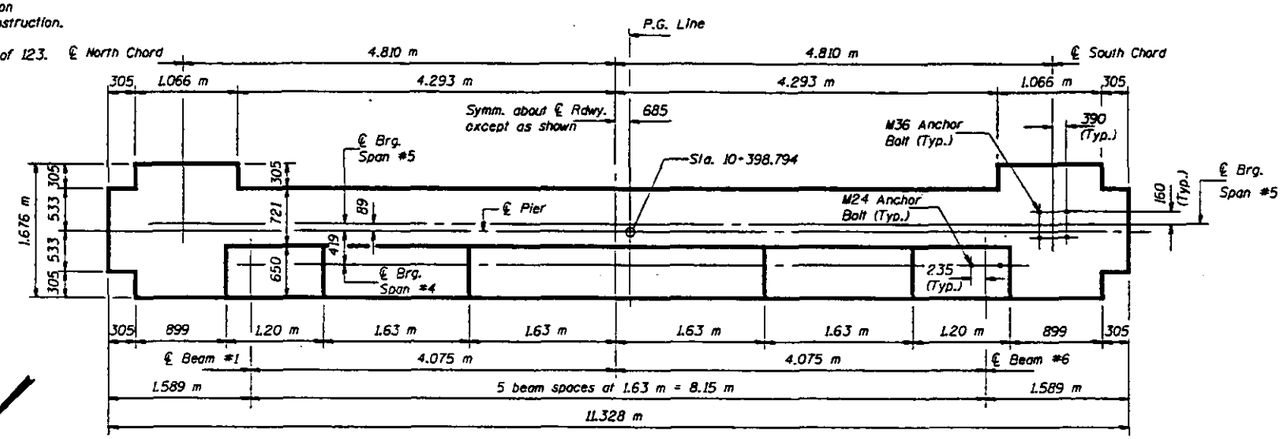

PLAN

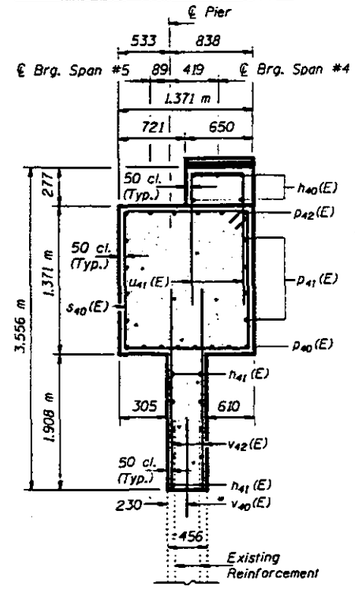

SECTION A-A

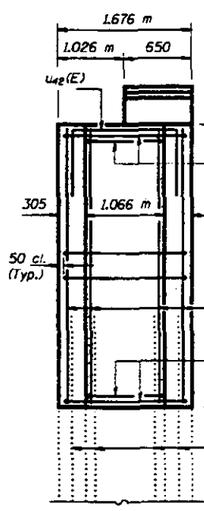

END VIEW

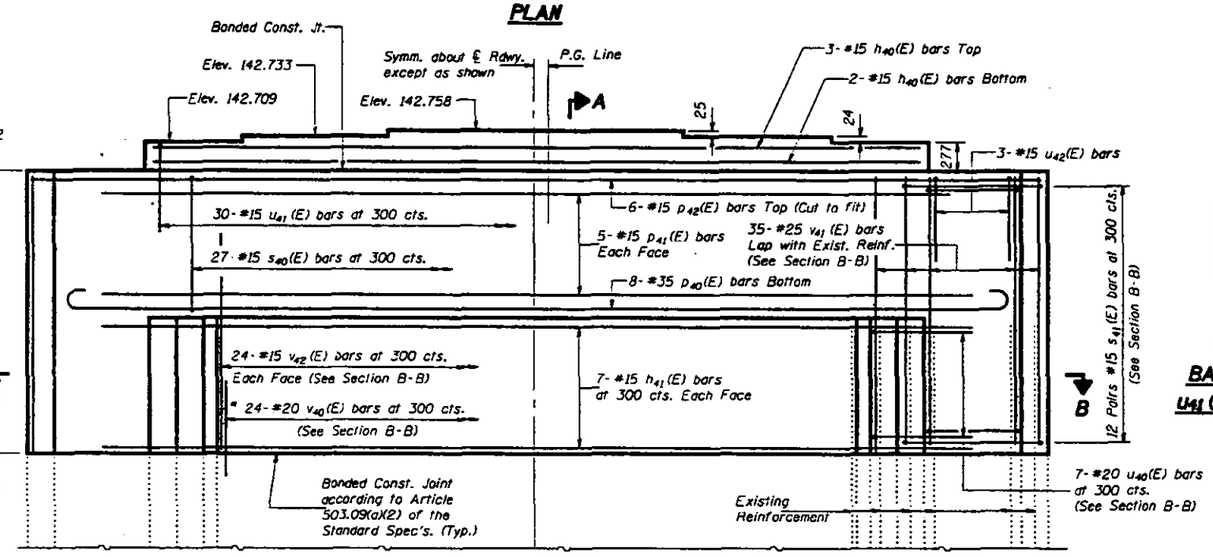

ELEVATION
(Looking East)

* Epoxy grout v_{40}(E) bars in 230 mm (Min.) drilled holes according to Section 584 of the Standard Specifications.

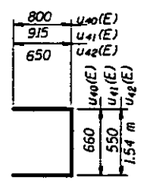

BARS u_{40}(E), u_{41}(E) & u_{42}(E)

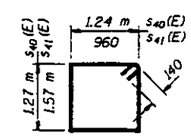

BARS s_{40}(E) & s_{41}(E)

BILL OF MATERIAL

Bar	No.	Size	Length(m)	Shape
h_{40}(E)	3	#15	8.80	
h_{41}(E)	14	#15	8.30	
p_{40}(E)	8	#35	11.34	
p_{41}(E)	10	#15	9.50	
p_{42}(E)	6	#15	11.20	
s_{40}(E)	27	#15	5.30	
s_{41}(E)	48	#15	5.34	
u_{40}(E)	14	#20	2.26	
u_{41}(E)	30	#15	2.38	
u_{42}(E)	6	#15	2.84	
v_{40}(E)	24	#15	0.65	
v_{41}(E)	70	#25	3.17	
v_{42}(E)	48	#15	2.40	
Concrete Structures			m^3	40.4
Reinforcement Bars, Epoxy Coated			kg	3140

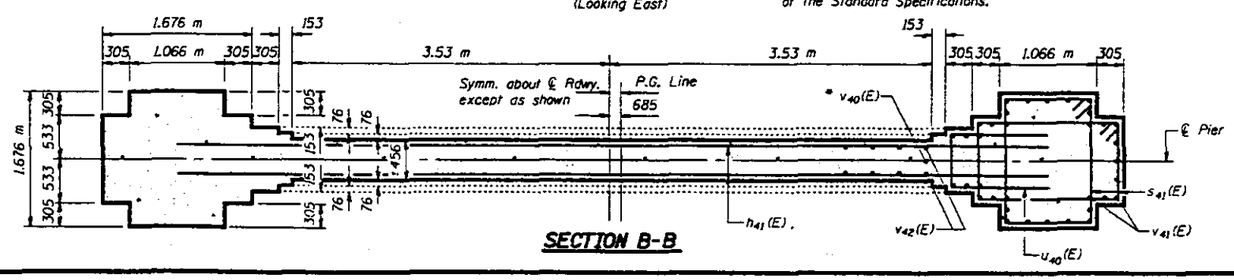

SECTION B-B

DESIGNED	JLC
CHECKED	TTbb
DRAWN	R. Doty
CHECKED	JLC TTbb

June 26, 1997

ENGINEER OF HIGHWAY DESIGN

ENGINEER OF BRIDGES AND STRUCTURES

PIER 4
F.A.P. RT. 315 SEC. 140B-I-4
FULTON AND MASON COUNTIES
STA. 10+646.69

Notes: Space reinforcement in caps to miss anchor bolts.
All edges shall have standard 20 mm chamfers.
For anchor bolt installation details see sheet #123 of 123.
Existing reinforcement bars extending into the new construction shall be cleaned, straightened and incorporated into the construction. Cost included with "Concrete Removal."
For concrete removal and pier repair details see sheet #110 of 123.
For truss jacking details see sheet #104 of 123.
Reinforcement bars designated (E) shall be epoxy coated.

STATE OF ILLINOIS
DEPARTMENT OF TRANSPORTATION

ROUTE NO.	SECTION	COUNTY	TOTAL SHEETS	SHEET NO.
F.A.P. 315	140B-I-4	FULTON & MASON		141

SHEET NO. 118
123 SHEETS

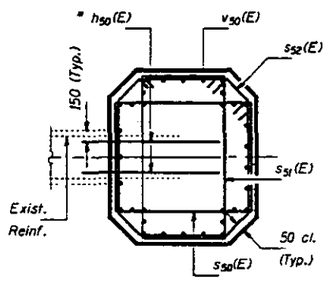

SECTION A-A

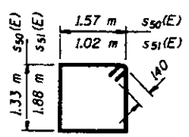

BARS s_{50}(E) & s_{51}(E)

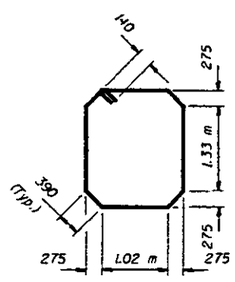

BAR s_{52}(E)

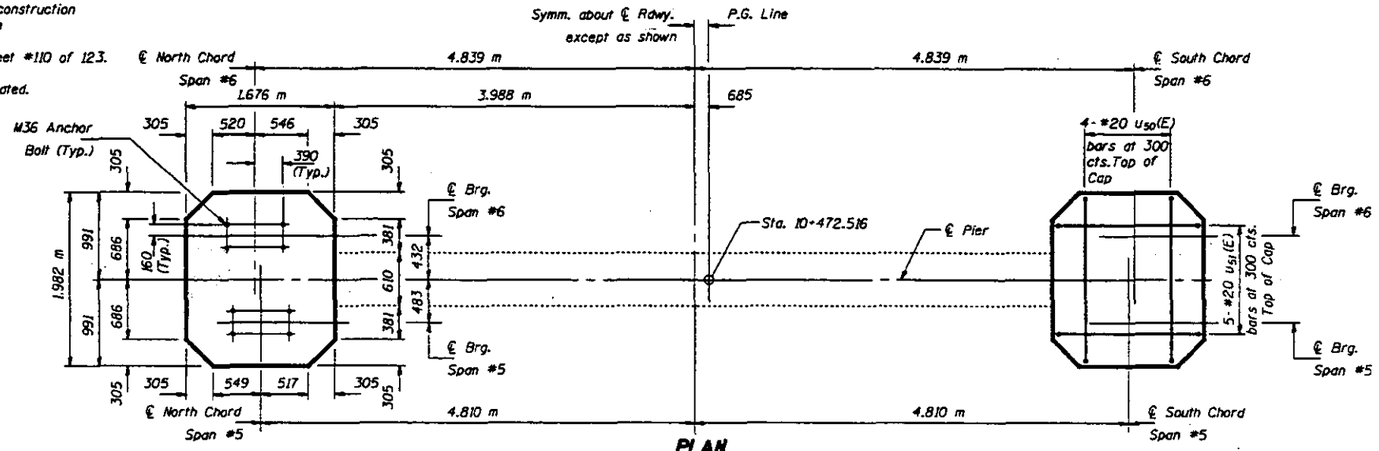

PLAN

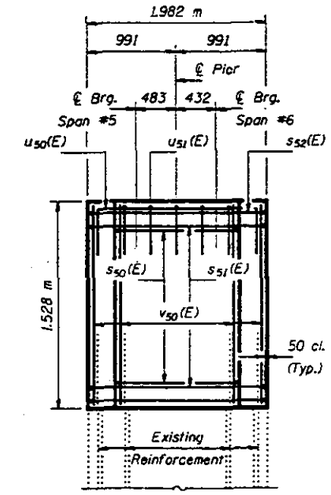

END VIEW

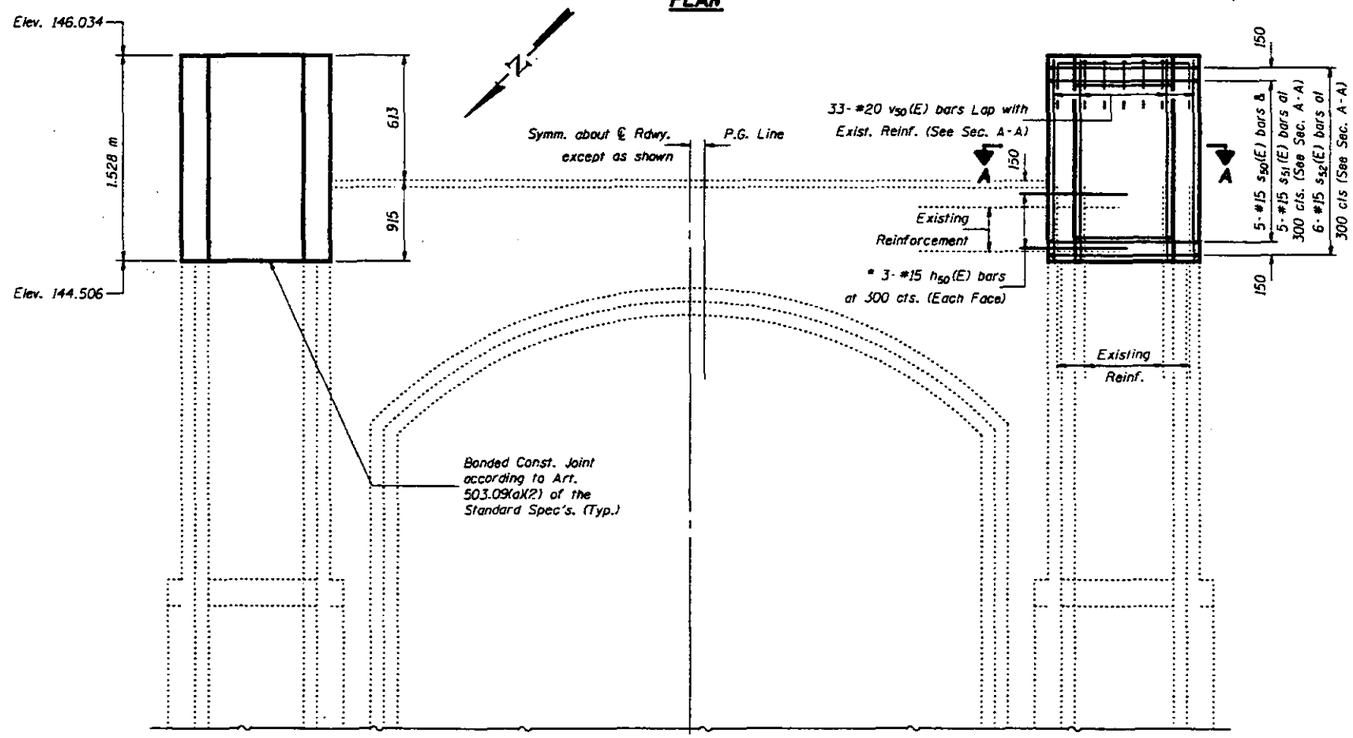

ELEVATION
(Looking East)

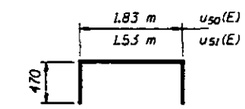

BARS u_{50}(E) & u_{51}(E)

BILL OF MATERIAL

Bar	No.	Size	Length(m)	Shape
h_{50}(E)	12	#15	1.0	
s_{50}(E)	10	#15	6.08	
s_{51}(E)	10	#15	6.08	
s_{52}(E)	12	#15	6.54	
u_{50}(E)	8	#20	2.77	
u_{51}(E)	10	#20	2.47	
v_{50}(E)	66	#20	1.42	
Concrete Structures			m^3	7.0
Reinforcement Bars, Epoxy Coated			kg	660

* Epoxy grout h_{50}(E) bars in 230 mm (Min.) drilled holes according to Section 584 of the Standard Specifications.

DESIGNED	JLC
CHECKED	TWM
DRAWN	R. Doty
CHECKED	JLC TWM

June 26, 1997

DESIGNED Jorge L. Vasquez — ENGINEER OF BRIDGE DESIGN
PASSED Ralph E. Anderson — ENGINEER OF BRIDGES AND STRUCTURES

PIER 5
F.A.P. RT. 315 SEC. 140B-I-4
FULTON AND MASON COUNTIES
STA. 10+646.69

Notes: Space reinforcement in caps to miss anchor bolts.
All edges shall have standard 20 mm chamfers.
For anchor bolt installation details see sheet #123 of 123.
Existing reinforcement bars extending into the new construction shall be cleaned, straightened and incorporated into the construction. Cost included with "Concrete Removal."
For concrete removal and pier repair details see sheet #111 of 123.
For truss jacking details see sheet #105 of 123.
Reinforcement bars designated (E) shall be epoxy coated.

STATE OF ILLINOIS
DEPARTMENT OF TRANSPORTATION

F.A.P. 315	140B-I-4	FULTON & MASON		142	SHEET NO. 119 / 123 SHEETS

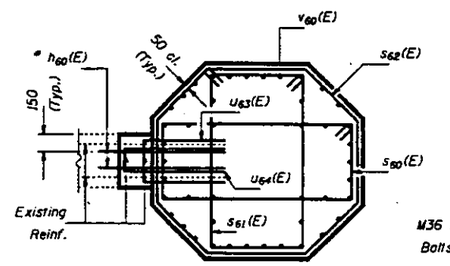

SECTION A-A

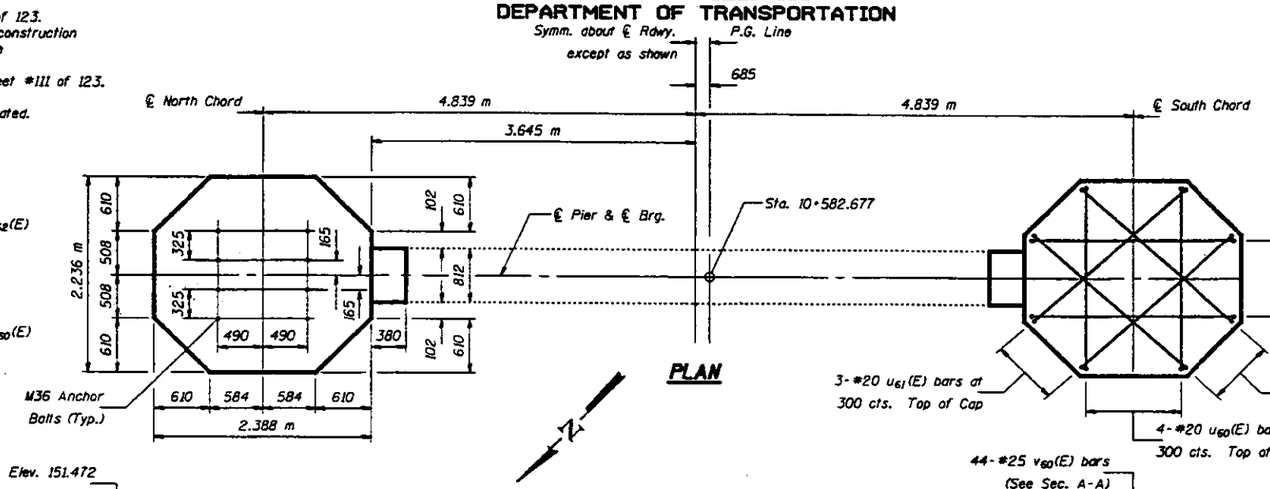

PLAN

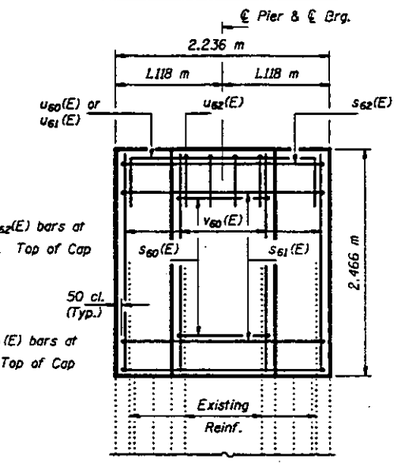

END VIEW

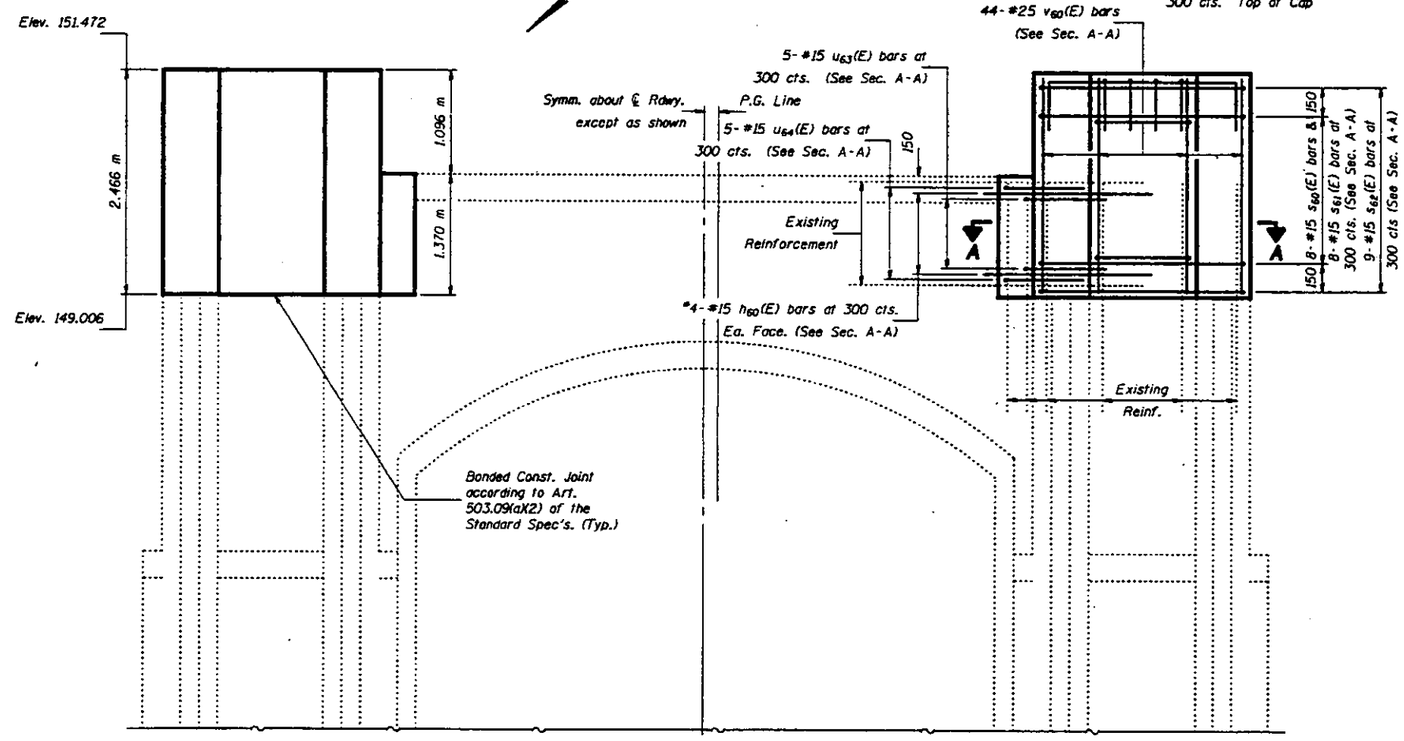

ELEVATION
(Looking East)

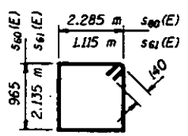

BARS $s_{60}(E)$ & $s_{61}(E)$

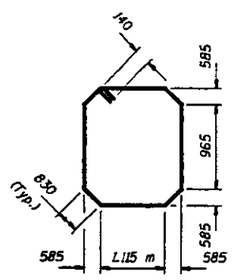

BAR $s_{62}(E)$

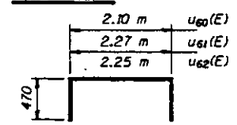

BARS $u_{60}(E)$, $u_{61}(E)$ & $u_{62}(E)$

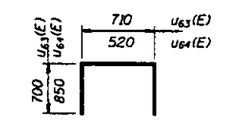

BARS $u_{63}(E)$ & $u_{64}(E)$

BILL OF MATERIAL

Bar	No.	Size	Length(m)	Shape
$h_{60}(E)$	16	#15	1.05	
$s_{60}(E)$	16	#15	6.78	
$s_{61}(E)$	16	#15	6.78	
$s_{62}(E)$	18	#15	7.76	
$u_{60}(E)$	8	#20	3.04	
$u_{61}(E)$	12	#20	3.21	
$u_{62}(E)$	8	#20	3.19	
$u_{63}(E)$	10	#15	2.10	
$u_{64}(E)$	10	#15	2.22	
$v_{60}(E)$	88	#25	2.36	
Concrete Structures			m^3	23.5
Reinforcement Bars, Epoxy Coated			kg	1680

* Epoxy grout $h_{60}(E)$ bars in 230 mm (Min.) drilled holes according to Section 584 of the Standard Specifications.

DESIGNED	JLC
CHECKED	THM
DRAWN	R. Doty
CHECKED	JLC THM

June 26, 1997

EXAMINED Engineer of Bridge Design
PASSED Engineer of Bridges and Structures

PIER 6
F.A.P. RT. 315 SEC. 140B-I-4
FULTON AND MASON COUNTIES
STA. 10+646.69

F.A.P. 315	408-I-4	FULTON & MASON		143

SHEET NO. 120
123 SHEETS

Notes: Space reinforcement in caps to miss anchor bolts.
All edges shall have standard 20 mm chamfers.
For anchor bolt installation details see sheet #123 of 123.
Existing reinforcement bars extending into the new construction shall be cleaned, straightened and incorporated into the construction. Cost included with "Concrete Removal."
For concrete removal and pier repair details see sheet #112 of 123.
For truss jacking details see sheet #105 of 123.
Reinforcement bars designated (E) shall be epoxy coated.

STATE OF ILLINOIS
DEPARTMENT OF TRANSPORTATION

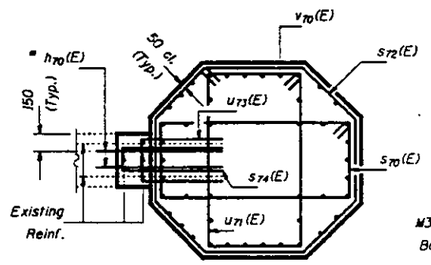

SECTION A-A

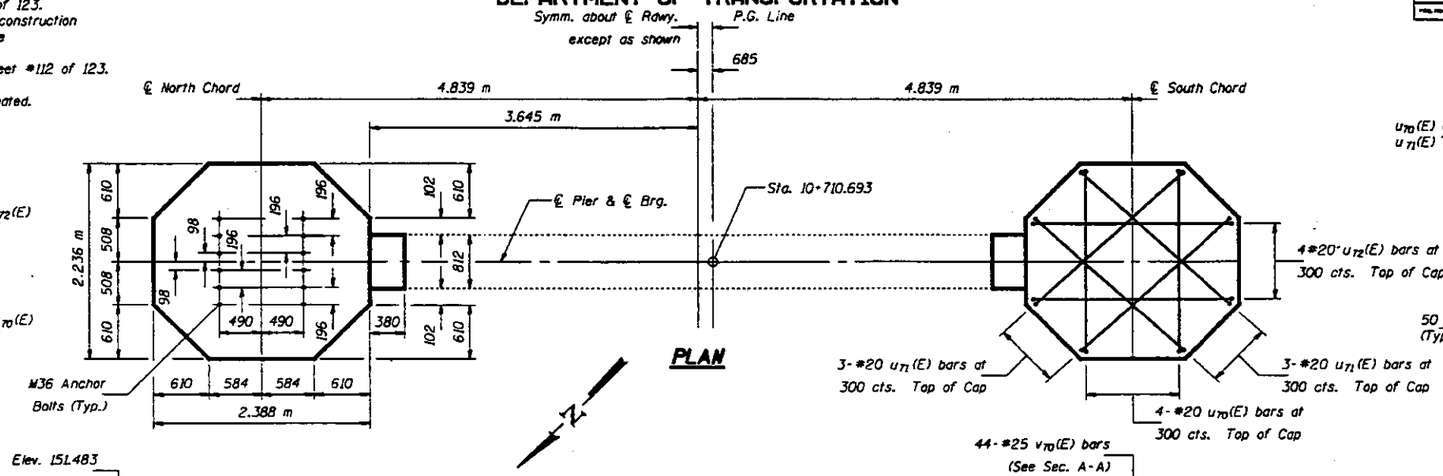

PLAN

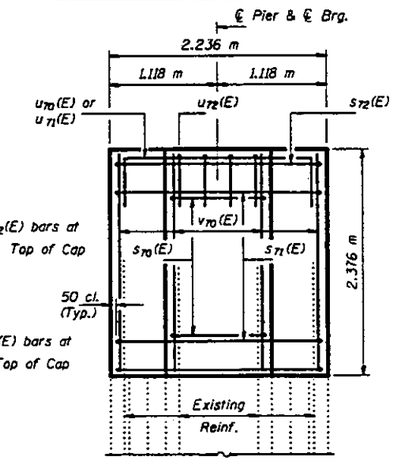

END VIEW

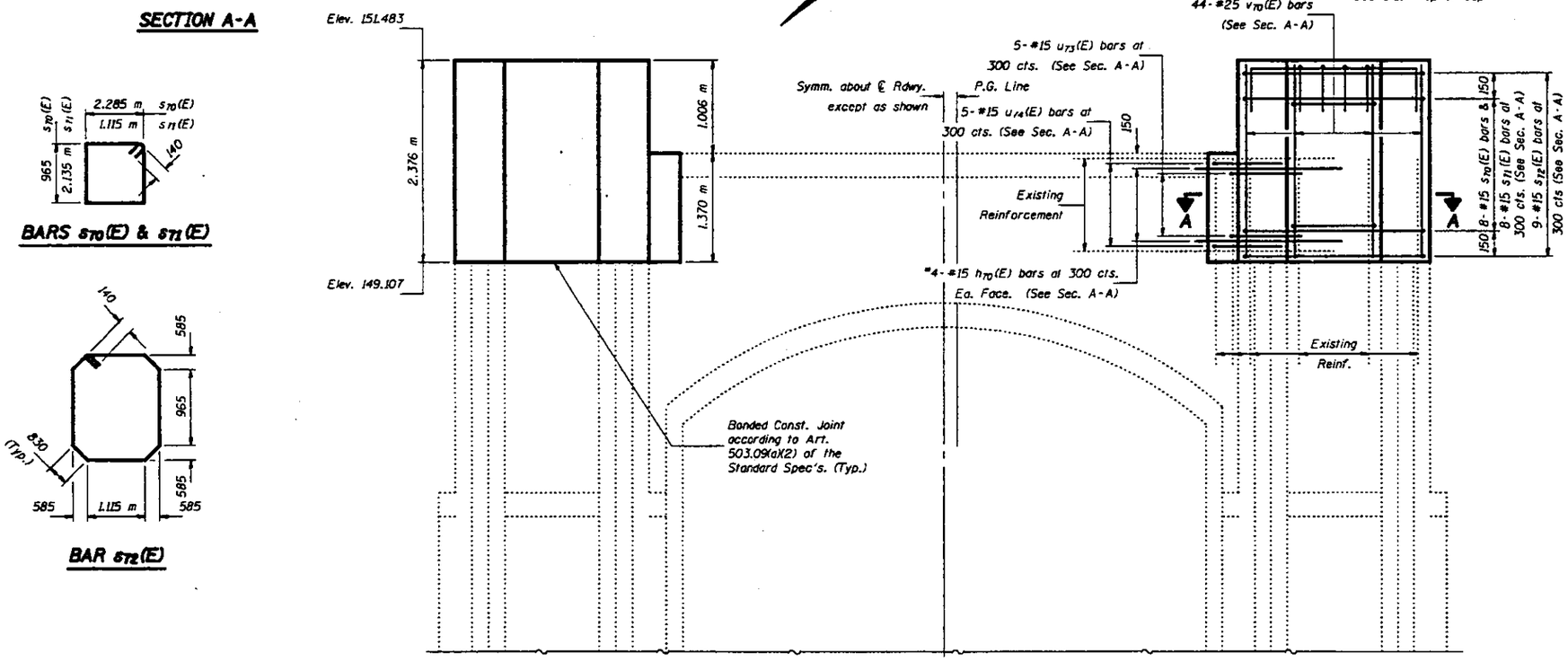

ELEVATION
(Looking East)

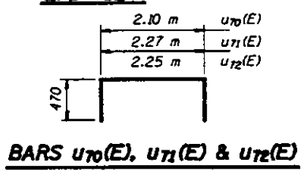

BARS $u_{70}(E)$, $u_{71}(E)$ & $u_{72}(E)$

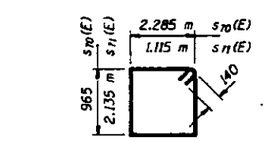

BARS $s_{70}(E)$ & $s_{71}(E)$

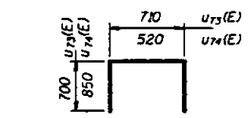

BARS $u_{73}(E)$ & $u_{74}(E)$

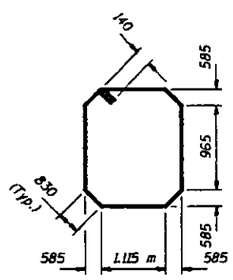

BAR $s_{72}(E)$

BILL OF MATERIAL

Bar	No.	Size	Length(m)	Shape
$h_{70}(E)$	16	#15	1.05	—
$s_{70}(E)$	16	#15	6.78	▭
$s_{71}(E)$	16	#15	6.78	▭
$s_{72}(E)$	18	#15	7.76	▭
$u_{70}(E)$	8	#20	3.04	⊓
$u_{71}(E)$	12	#20	3.21	⊓
$u_{72}(E)$	8	#20	3.19	⊓
$u_{73}(E)$	10	#15	2.10	⊓
$u_{74}(E)$	10	#15	2.22	⊓
$v_{70}(E)$	88	#25	2.27	—
Concrete Structures			m^3	22.7
Reinforcement Bars, Epoxy Coated			kg	1650

* Epoxy grout $h_{70}(E)$ bars in 230 mm (Min.) drilled holes according to Section 584 of the Standard Specifications.

DESIGNED	JLC
CHECKED	TWM
DRAWN	R. Doty
CHECKED	JLC TWM

June 26, 1997

DAMAGED [signature] HOMEOR OF HIGHWAY DESIGN

PASSED [signature] ENGINEER OF BRIDGES AND STRUCTURES

PIER 7
F.A.P. RT. 315 SEC. 408-I-4
FULTON AND MASON COUNTIES
STA. 10+646.69

STATE OF ILLINOIS
DEPARTMENT OF TRANSPORTATION

F.A.P. 315	140B-1-4	FULTON & MASON		144

SHEET NO. 121
123 SHEETS

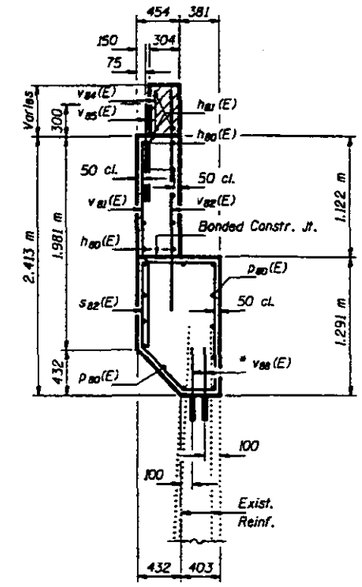

SECTION A-A

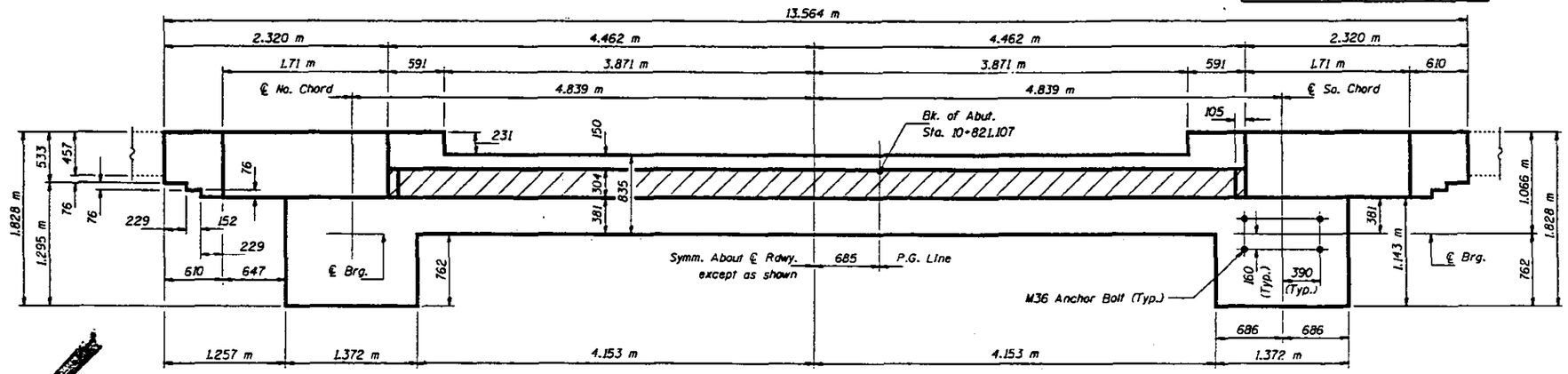

PLAN

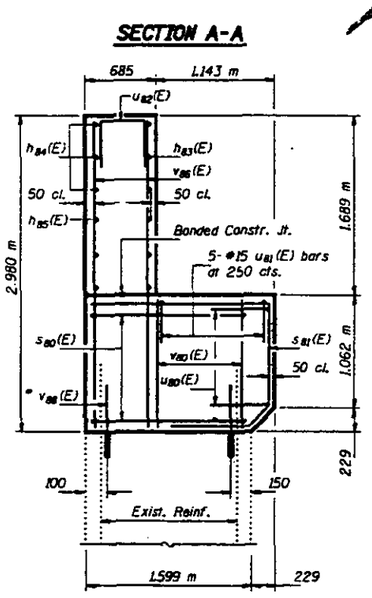

SECTION B-B

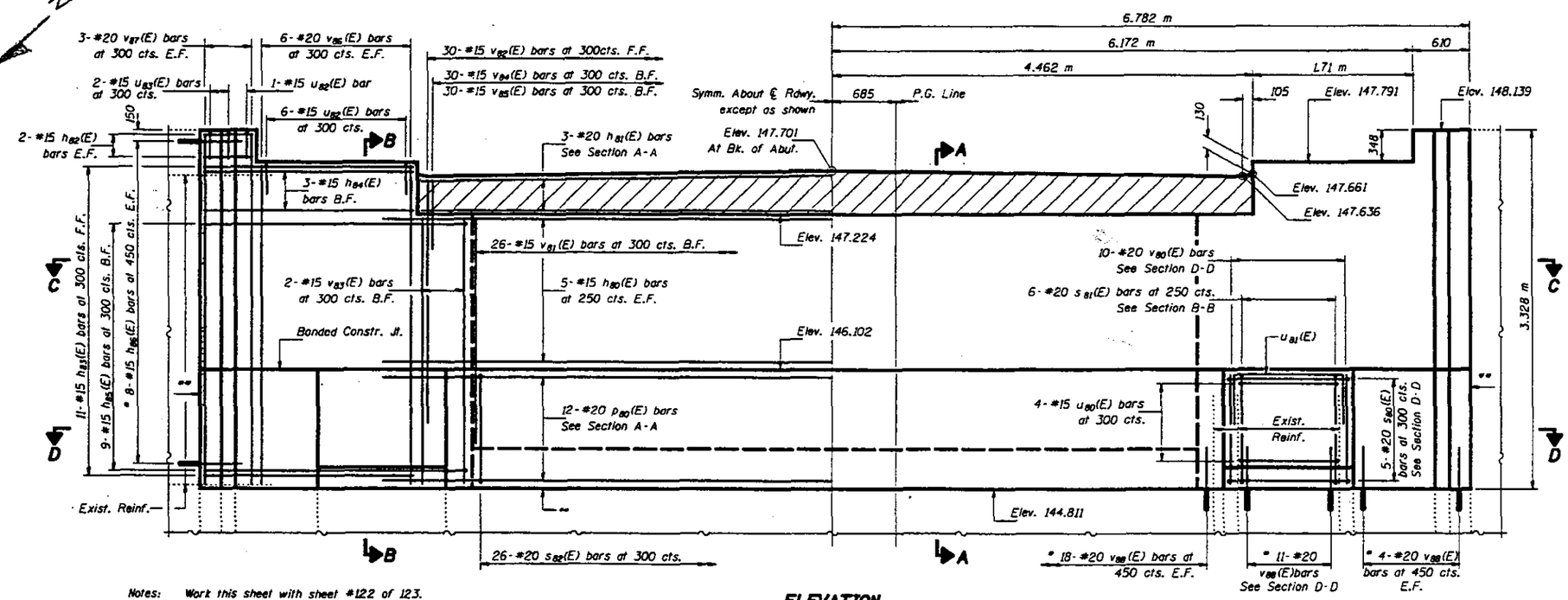

ELEVATION

(Looking East)

DESIGNED	JLC
CHECKED	THM
DRAWN	John F. Schneller Jr.
CHECKED	JLC THM

June 26, 1997

EXAMINED [signature] ENGINEER OF BRIDGE DESIGN

PASSED [signature] ENGINEER OF BRIDGES AND STRUCTURES

Notes: Work this sheet with sheet #122 of 123.
Space reinforcement in cap to miss anchor bolts.
All edges shall have standard 20 mm chamfers except as noted.
For Anchor Bolt installation details see sheet #123 of 123.
Hatched area to be poured after superstructure forms have been removed. Quantity of concrete included with "Concrete Superstructure" on sheet #22 of 123.
For concrete removal details see sheet #107 of 123.
Reinforcement bars designated (E) shall be epoxy coated.
Existing reinforcement bars extending into the new construction shall be cleaned, straightened and incorporated into the new construction. Cost included with "Concrete Removal".

* Epoxy grout $h_{86}(E)$ & $v_{88}(E)$ bars in 230 mm (Min.) drilled holes according to Section 584 of the Standard Specifications.

** Bonded Const. Joint in accordance with Art. 503.09(a)(2) of the Standard Specifications.

EAST ABUTMENT
F.A.P. RT. 315 SECTION 140B-1-4
FULTON AND MASON COUNTIES
STATION 10+646.69

F.A.P. 315	140B-I-4	FULTON & MASON		145

SHEET NO. 122
123 SHEETS

STATE OF ILLINOIS
DEPARTMENT OF TRANSPORTATION

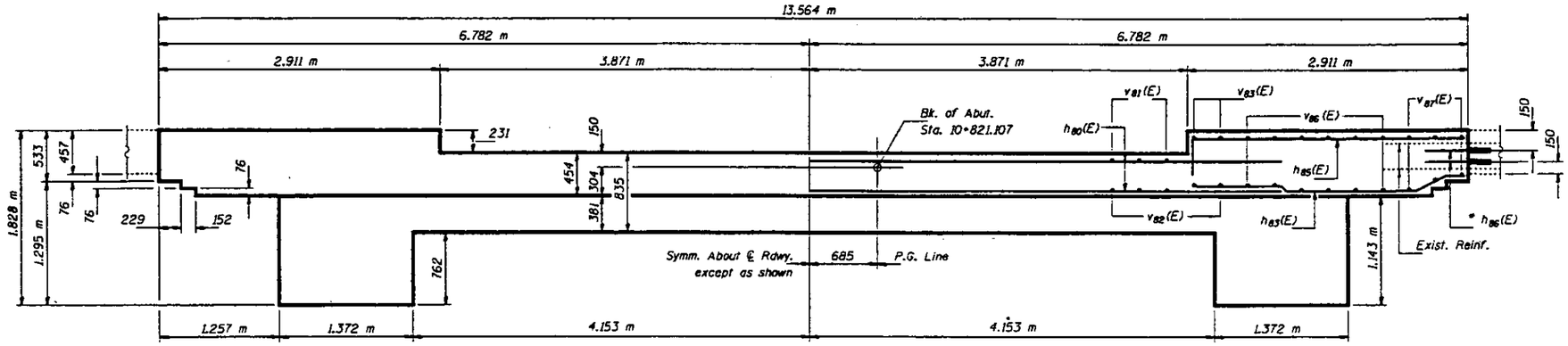

SECTION C-C

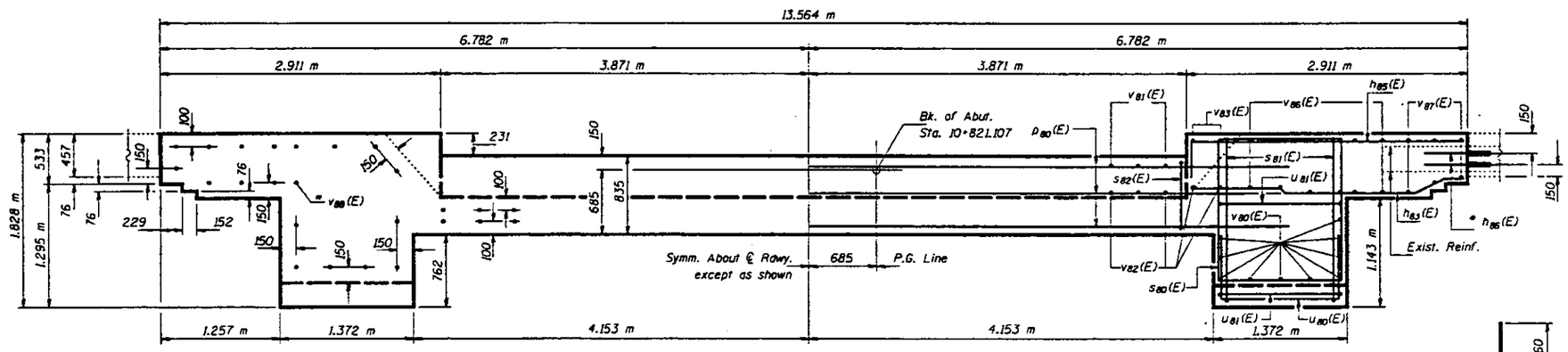

SECTION D-D

BILL OF MATERIAL

Bar	No.	Size	Length (m)	Shape
$h_{80}(E)$	10	#15	10.30	
$h_{81}(E)$	3	#20	8.82	
$h_{82}(E)$	8	#15	.51	
$h_{83}(E)$	22	#15	2.26	
$h_{84}(E)$	6	#15	2.22	
$h_{85}(E)$	18	#15	3.41	
$h_{86}(E)$	32	#15	.61	
$p_{80}(E)$	12	#20	9.35	
$s_{80}(E)$	10	#20	5.96	
$s_{81}(E)$	12	#20	3.47	
$s_{82}(E)$	26	#20	4.02	
$u_{80}(E)$	8	#15	2.41	
$u_{81}(E)$	10	#15	2.03	
$u_{82}(E)$	14	#15	1.38	
$u_{83}(E)$	4	#15	1.23	
$v_{80}(E)$	20	#20	1.19	
$v_{81}(E)$	26	#15	1.88	
$v_{82}(E)$	30	#15	2.00	
$v_{83}(E)$	4	#15	2.31	
$v_{84}(E)$	30	#15	1.00	
$v_{85}(E)$	30	#15	.76	
$v_{86}(E)$	24	#20	2.88	
$v_{87}(E)$	12	#20	3.22	
$v_{88}(E)$	74	#20	.70	
Concrete Structures			m^3	26.4
Reinforcement Bars, Epoxy Coated			kg	2010
Structure Excavation			m^3	38.8

Notes: Work this sheet with sheet #121 of 123.

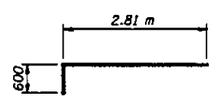

BAR $h_{85}(E)$

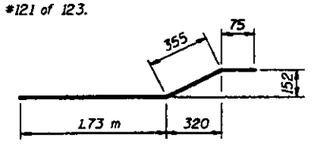

BAR $h_{83}(E)$

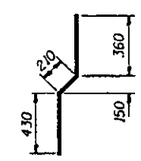

BAR $v_{84}(E)$

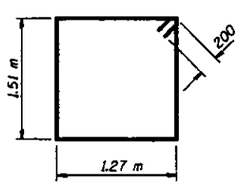

BAR $s_{80}(E)$

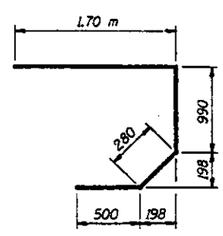

BAR $s_{81}(E)$

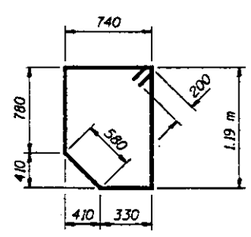

BAR $s_{82}(E)$

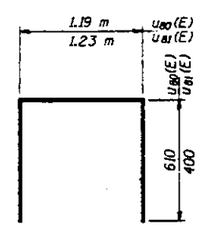

BARS $u_{80}(E)$ & $u_{81}(E)$

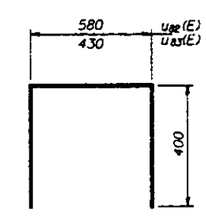

BARS $u_{82}(E)$ & $u_{83}(E)$

DESIGNED	JCC
CHECKED	TWM
DRAWN	John F. Schneller Jr.
CHECKED	JCC TWM

June 26, 1997

CHIEF ENGINEER OF BRIDGE DESIGN

ENGINEER OF BRIDGES AND STRUCTURES

EAST ABUTMENT DETAILS
F.A.P. RT. 315 SECTION 140B-I-4
FULTON AND MASON COUNTIES
STATION 10+646.69

STATE OF ILLINOIS
DEPARTMENT OF TRANSPORTATION

F.A.P. NO.	SECTION	COUNTY	TOTAL SHEETS	SHEET NO.
F.A.P. 315	140B-1-4	FULTON & MASON		
FED. ROAD DIST. NO. 7	ILLINOIS	FED. AID PROJECT-		

SHEET NO. 123
123 SHEETS

D	E	H	K	"d"
24	27	20	44	6
30	33	26	51	10
36	39	32	54	13
48	51	44	73	15
64	67	60	86	25

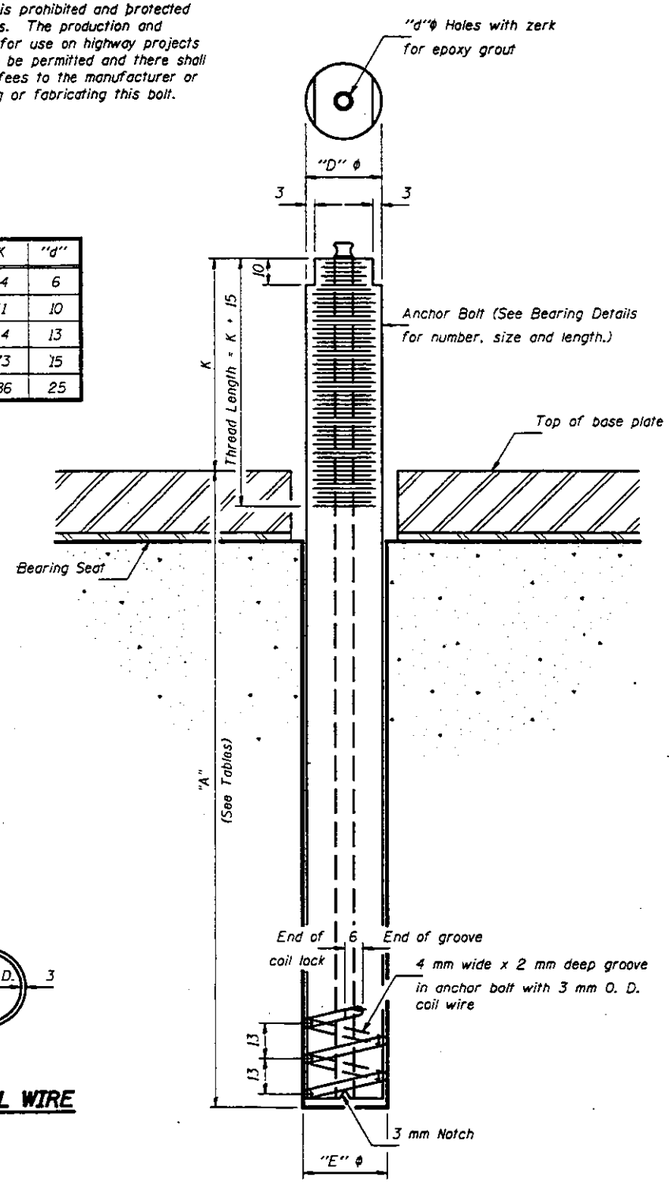

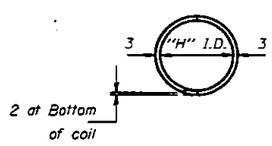

PLAN-COIL WIRE

ILLINOIS COIL-LOCK ANCHOR BOLT

MATERIALS FOR ILLINOIS COIL-LOCK ANCHOR BOLT

The anchor bolt shall be fabricated from cold drawn or hot finished seamless carbon steel mechanical tubing conforming to ASTM A 519, Grade 1026, CW and supplied with hexagonal nuts and cut washers. 1

The coil wire shall be made of any suitable soft steel wire.

The finished anchor bolt shall be cleaned of rust and other foreign materials and wrapped or packaged to prevent contamination until they are installed.

The epoxy grout shall be a two-component, epoxy resin bonding system comforming to ASTM C881, Type I, Grade 1 and of a Class suitable for the temperature at installation.

INSTALLATION PROCEDURE for the ILLINOIS COIL-LOCK ANCHOR BOLT

1. With the coil wire in place, the bolt shall be inserted into the hole and turned clockwise to a snug fit in the hole. Nut and washer shall be placed on the bolt. The nut shall be tensioned until the steel base plates are held securely to the concrete bearing seat.
2. Epoxy grout shall be pumped through the zerk fitting with a pressure gun. Pumping shall continue until the epoxy overflows the hole around the bolt shank. After pumping is discontinued, excess epoxy shall be immediately wiped off.

ALTERNATE ANCHOR BOLTS

The Contractor may use, at his option, the capsule or the adhesive cartridge type anchor rods that have been previously tested and given a prior approval by the Department. The Contractor shall install these anchor rods in pre-drilled holes in accordance with the manufacturer's recommendations and procedures.

The capsule or the adhesive cartridge type anchor rods shall be a two part system composed of:

1. A threaded rod stud with nut and washer conforming to ASTM A307 except where otherwise specified. 1
2. A sealed glass capsule or a sealed glass adhesive cartridge containing premeasured amounts of the adhesive chemical.

GENERAL NOTES

Holes in the masonry for anchor bolts shall be drilled through the base plates to the diameter and depth shown or in accordance with the manufacturer's recommendation after beams or girders have been erected and adjusted.

Prior to setting the bolts, the holes shall be dry and all dust and loose particles shall be removed by the use of compressed air or vacuuming.

The anchor bolts, furnished and installed and including the epoxy grout or capsules shall not be paid for separately but shall be included in the unit bid price for "Furnishing and Erecting Structural Steel".

All dimensions are in millimeters (mm) except as noted.

DIMENSION "A" APPROACHES

Location	"A"
W. Abut. & Pier #4	256
Piers #1 & #3	329
Pier #2	329

DIMENSION "A" TRUSSES

Location	"A"
Pier #4	396
Pier #5	396
Pier #6	396
Pier #7	396
E. Abut.	396

DESIGNED	JLC
CHECKED	TTBB TWM
DRAWN	R. Doty
CHECKED	TTBB TWM

June 26, 1997

EXAMINED Greg J. Hagen ENGINEER OF BRIDGE DESIGN

PASSED Ralph E. Anderson ENGINEER OF BRIDGES AND STRUCTURES

ABB-1 (M) 7-1-94

ANCHOR BOLT DETAILS FOR BEARINGS
F.A.P. RT. 315 SECTION 140B-1-4
FULTON AND MASON COUNTIES
STATION 10+646.69

1 Revised 7-16-97 STD